Request for Expression of Interest for Radioactive Waste Processing Capability at the Oak Ridge National Laboratory Available August 31, 2012

UT-Battelle, LLC (UT-Battelle), the Management and Operating Contractor of the Oak Ridge National Laboratory (ORNL), is requesting an expression of interest (EOI) from prospective subcontractors (understood to mean subcontractor and any team members) to provide existing proven "turnkey" technology and services capability to collect, segregate, characterize, treat (as necessary), certify, package and transport for final disposition contact handled (CH) and remote-handled (RH) transuranic (TRU) solid debris and RH liquid wastes (RHLW) generated at ORNL.

The EOI can be found at http://www.ornl.gov/adm/contracts/majorprocs.pdf and responses are due by 5 pm Eastern Time, October 31, 2012. If you have questions or need additional information, please contact Cassandra Anthony at 865-576-0151 or email at anthonycy@ornl.gov . An EOI Information Meeting is expected to be held September 19, 2012 from 8:30 to 12 noon at ~~1060 Commerce Park Auditorium~~, The DoubleTree Hotel, 215 S. Illinois Avenue, Oak Ridge, TN. Please register with Cassandra Anthony to attend the Information Meeting.

REQUEST FOR EXPRESSION OF INTEREST
RADIOACTIVE WASTE PROCESSING CAPABILITY
AT THE OAK RIDGE NATIONAL LABORATORY

I. INTRODUCTION / BACKGROUND

UT-Battelle, LLC (UT-Battelle), the Management and Operating Contractor of the Oak Ridge National Laboratory (ORNL), is requesting an expression of interest (EOI) from prospective subcontractors (understood to mean subcontractor and any team members) to provide existing proven “turnkey” technology and services capability to collect, segregate, characterize, treat (as necessary), certify, package and transport for final disposition contact handled (CH) and remote-handled (RH) transuranic (TRU) solid debris and RH liquid wastes (RHLW) generated at ORNL.

This capability may be applied at the ORNL site, or at the subcontractor’s site(s), or other DOE owned facilities. The subcontractor may also identify the use of existing DOE or other Government equipment (e.g., shipping casks). It is the desire of ORNL to minimize the life cycle cost to disposition ORNL's TRU solid and RH liquid waste. To that end, ORNL is particularly interested in the possible application of “right-sized” mobile technologies that would minimize the construction of fixed capital assets, and or the utilization of subcontractor or other DOE assets in a manner that also results in optimized future operating (including transportation and disposal) costs.

ORNL currently does not have the necessary capabilities to process all solid RH and CH TRU, and liquid RH wastes resulting from the Laboratory's nuclear-related missions. ORNL currently relies on outlets for these materials through DOE Environmental Management that are expected to no longer be available in 2016 for TRU solid materials and 2021 for RH liquids. In the future various DOE-sponsored programs undertaken at ORNL are expected to produce radioactive wastes and other materials that are classified as RH (contact radiological dose rate > 200 mR/hr) and CH (contact radiological dose rate < 200 mR/hr) TRU. These materials include Spent Nuclear Fuel (SNF) examination wastes, TRU solid waste, and RH liquid waste (may be LLW and/or TRU). The waste primarily contains isotopes of uranium, plutonium, californium, and other TRU isotopes, and shorter-lived isotopes such as cesium, strontium, and cobalt.

These materials and waste are presently (and expected in the future) to be generated in several facilities at ORNL identified as Generator 1, 2, and 3. (see Figure 1 for general locations), plus several other small volume generators. Additional description of waste generation processes and characteristics is provided for TRU solids (Attachment 1) and RH liquids (Attachment 2).

Figure 1 Generator Location on ORNL Site

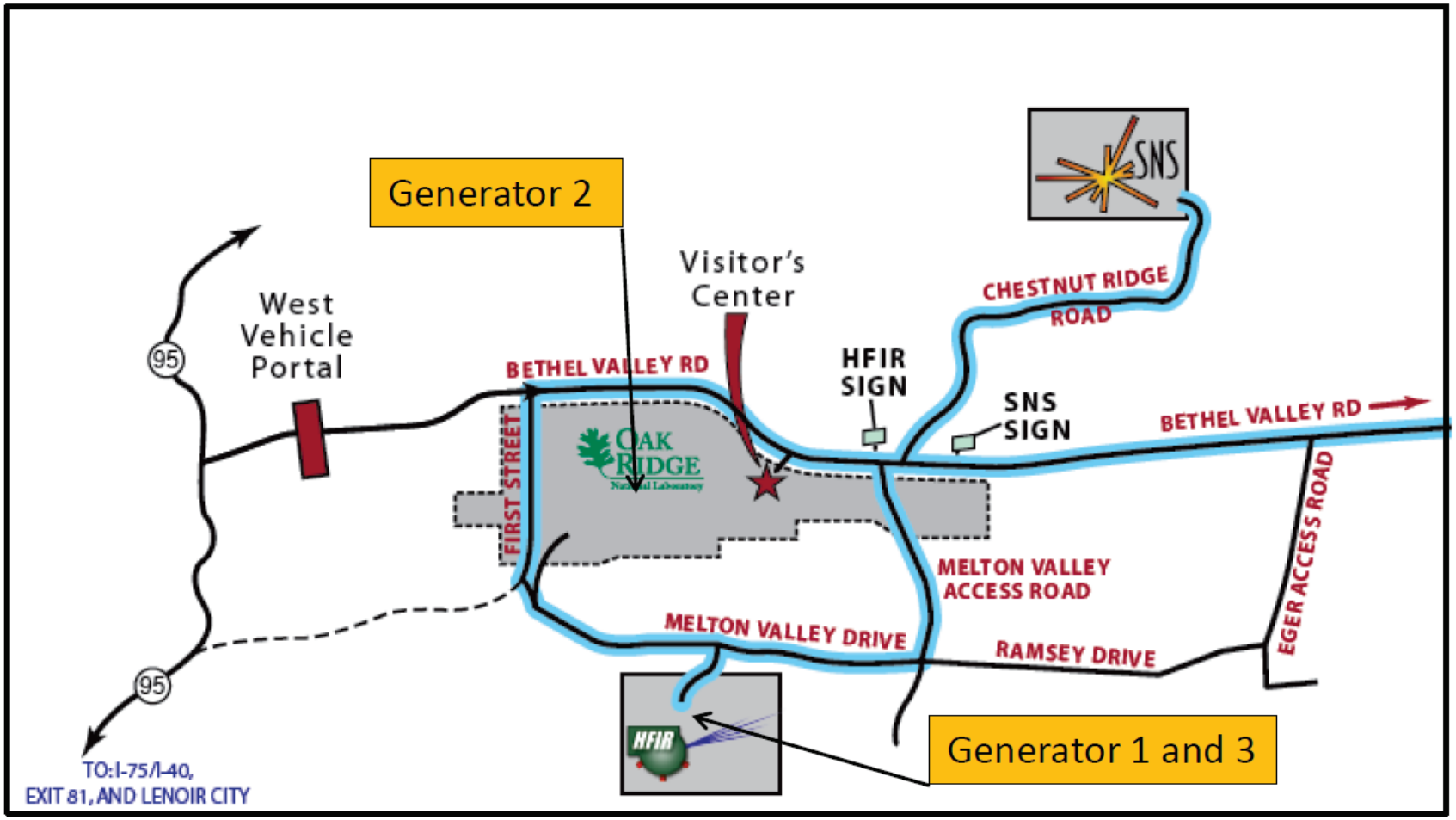

II. PERFORMANCE CRITERIA

To be a viable candidate for a future request for proposal (RFP) potential subcontractors must meet the following technical and service requirements:

1. Subcontractor capabilities must be based on existing design/equipment/facilities/services with proven full-scale demonstration of RH and CH TRU waste collection, treatment, certification, packaging, and disposal of at least 20 m^3/yr CH TRU and 5 m^3/yr RH TRU solids.

2. Subcontractor capabilities must be based on existing design/equipment/facilities/services with proven full scale demonstration of RH liquid waste collection, remote treatment, certification, packaging, and disposal of from 3,000-13,000 gal/yr (11-49 m^3/yr) for RHLW.

3. The Subcontractor must be able to provide all pre-conceptual design/feasibility analysis studies, design, fabrication, construction, and operations services required to treat the identified waste streams.

4. Subcontractor must be capable of processing waste container configurations as currently generated as described in Attachment 1 and 2.

5. Technology and equipment are desired to be portable/modular and require minimal on-site fabrication/construction.

6. Technology and associated equipment/facilities must be designed to be maintainable as required to meet a 30 year operating life, or be easily and economically replaceable.

7. The safety design requirements of DOE Order 420.1B, Facility Safety must be capable of being satisfied for activities performed on the ORNL/DOE site. For activities conducted off the ORNL/DOE site commercial standards and regulations must be capable of being satisfied.

8. The technology must provide radiological shielding and must be designed/configured to maintain worker exposure As Low As Reasonably Achievable (ALARA).

9. The technology and services must be designed/constructed/operated to the applicable nuclear and other quality assurance requirements (e.g., NQA-1, 10CFR830, DOE O 414.1C).

10. The waste form must be certifiable and transportable for disposal at existing DOE (NNSS, WIPP), or commercial permanent disposal site(s).

The Contractual terms and conditions and associated exhibits that the Company would apply to any future subcontracts can be found at: the UT-Battelle, LLC, Contracts Division Home Page under Document Index at the URL listed

General Terms and Conditions FP (01/12)
http://www.ornl.gov/adm/contracts/library/terms_conditions/fp-jan12.pdf

General Terms and Conditions CT (01/12)
http://www.ornl.gov/adm/contracts/library/terms_conditions/ct-jan12.pdf

General Terms and Conditions CON (01/12)
http://www.ornl.gov/adm/contracts/library/terms_conditions/con-jan12.pdf

General Terms and Conditions TM (01/12)
http://www.ornl.gov/adm/contracts/library/terms_conditions/tm-jan12.pdf

Special Articles and Forms – PAAA Clause (12/10)
http://www.ornl.gov/adm/contracts/library/articles_forms/paaa-ext-dec10.pdf
http://www.ornl.gov/adm/contracts/QAProgram.pdf
http://www.ornl.gov/adm/contracts/rpp.pdf

Special Articles and Forms – Insurance – Form 2 (03/11)
http://www.ornl.gov/adm/contracts/library/articles_forms/insurance-form2-ext-mar11.pdf

Exhibit 9, Technical Data (6/11)
http://www.ornl.gov/adm/contracts/library/exhibits/ex9-june11.pdf
http://www.ornl.gov/adm/contracts/library/exhibits/ex9ed-june11.pdf

III. SUBMITTAL REQUIREMENTS

Prospective subcontractors shall provide statements of qualifications no greater than 25 pages in length (not including items 11 and 12 below) in the following areas:

1. A description of existing capabilities that meet the performance requirements identified under Section II - Performance Criteria that can be applied to the collection, sorting, treatment (as required), certification, packaging, and disposal of CH and RH TRU solid debris and RH liquid wastes.

2. Determination of whether the ORNL waste can be shipped from ORNL for processing at subcontractor or other DOE locations, including a description of any capabilities required to characterize and package the waste and the containers and associated transportation safety documents that would be used for shipment to the Subcontractor site.

3. Provide evidence that substantiates full-scale, field-proven operation of Subcontractor's technology(ies) under similar operating conditions as will be encountered with the ORNL wastes (as described in Attachments 1 and 2).

4. A listing of references who represent direct clients of your firm (or team members) and that can validate past performance of the proposed technology(ies) to similar conditions as will be encountered at ORNL.

5. Examples that demonstrate your firm's (or team members') successful performance of similar activities at U.S. Department of Energy sites.

6. A budgetary estimate to complete pre-conceptual design/feasibility analysis of application of the firm's technology(ies) and services to the specific conditions as will be encountered at ORNL (as described in Attachments 1 and 2) and in accordance with all applicable requirements. A formal cost estimate (and schedule) to complete pre-conceptual design/feasibility analyses, and options for design, fabrication, construction, and operations services may be obtained via future RFPs.

7. A schedule to complete the above identified pre-conceptual design/feasibility analysis. It is ORNL's desire to complete this activity by the end of June 2013 to support ORNL's completion in Fiscal Year 2013 of an options evaluation for processing ORNL's TRU and RH liquid waste.

8. An initial cost range for deploying the identified technology(ies) and services for the ORNL wastes. Note: It is expected that this estimate will be updated as part of the pre-conceptual design/feasibility analysis.

9. An initial timeline for deploying the identified technology(ies) for ORNL including, but not limited to, completion of conceptual, preliminary, and final design, fabrication, mobilization, readiness reviews and start of operations. Note: It is expected that this schedule will be updated as part of the pre-conceptual design/feasibility analysis.

10. Identify changes to existing waste handling and packaging practices that could result in improved ALARA, safety, waste disposal operations, and an estimate of potential reduction in total waste disposal system cost.

11. Provide copies of your firm's currently approved Quality Assurance (QA) programs and/or industrial QA certifications (e.g., ISO 9000).

12. Provide copies of your firm's currently approved Health and Safety programs including any radioactive material licenses that would be used for the proposed activities.

Failure to provide the requisite submittals may limit a prospective subcontractor's ability in being a viable candidate for a future RFP. Formal proposals that may be issued in a future RFP will only be solicited from candidate firms identified through this EOI that currently possess the necessary technology(ies) and service capabilities

This EOI infers no commitment to issue a solicitation or to make an award. Any and all costs associated with the preparation of responses to this EOI are the sole responsibility of the respondent. If proprietary data is included in the EOI, it must be marked "Proprietary" and UT-Battelle will protect it from public disclosure. In the event the proposer is not selected to respond to any future RFP, the proprietary data will be returned to the proposer or destroyed at proposer's direction. If the proposer is selected to respond to any future RFP, UT-Battelle will continue to protect the proprietary data and use it in the evaluation of the RFP, and if the proposer is not selected for an award, the proprietary data will be returned at that time to the proposer or destroyed at proposer's direction. For the proposer(s) selected for an award, the further protection of the proprietary data will be addressed in the award document. Please provide your EOI via e-mail to the undersigned by 5:00 p.m. Eastern Time, October 31, 2012. If you have questions or need additional information, please contact Cassandra Anthony at 865-576-0151 or email at anthonycy@ornl.gov . Technical questions must be submitted via email.
An EOI Information Meeting is expected to be held September 19, 2012 from 8:30 to 12 noon at The DoubleTree Hotel, 215 S. Illinois Avenue, Oak Ridge, TN. Please register with Cassandra Anthony to attend the Information Meeting.

Cassandra Anthony
Contracts Lead
OAK RIDGE NATIONAL LABORATORY
PO BOX 2008 MS6293
OAK RIDGE TN 37831-6293
865-576-0151
anthonycy@ornl.gov

Attachment 1

Oak Ridge National Laboratory (ORNL) CH and RH TRU Debris Generation Estimates for Vendor Expression of Interest
8/31/12

Background

Approximately 20 m^3/yr of contact handled (CH) (contact radiological dose rate < 200 mrem/h) transuranic (TRU) waste and approximately 5 m^3/yr of remote handled (RH)(contact radiological dose rate > 200 mrem/h) TRU waste is generated from several facilities located throughout the ORNL campus. These facilities perform fuel examination, materials testing, isotope production, and other research activities in hot cells, glove boxes, and laboratories that involve a wide variety and concentration of transuranic isotopes and fission products. CH and RH TRU waste consists of contaminated solid debris (e.g., PPE, lab operation, isotope production, operations equipment, filters, etc.). CH TRU is packaged inside the generating facilities into standard DOT 55 gal drums and, for over-sized waste items, non-standard metal boxes. RH TRU is packaged inside the generating facilities into standard 3.2 m^3 onsite storage concrete casks (see Appendix A). The packaged TRU wastes are periodically transferred to URS/CH2 Oak Ridge (UCOR) for storage in their existing waste management facilities.

Waste Streams

The streams requiring treatment in the future are discussed in the following sections. The waste generation information is based on expected facility configuration and future projects planned at ORNL beyond 2016.

Generator 1:

Generator 1 operations involve two buildings – Building 1A and Building 1B. Major activities at Generator 1 include the recovery and purification of transuranium elements, which are primarily alpha emitters of high specific activity, and the development of processing and separations methods. However, a wide range of activities has been carried out at Generator 1 on a more limited scale. Radiochemical processing includes dissolution of irradiated targets, separation of the TRU elements from fission products and miscellaneous impurities, and, finally, separation of the TRU elements from each other. Separations are accomplished by a sequence of solvent extraction, precipitation, and ion exchange processes.

Building 1A is a glove box laboratory and hot cell facility. It contains nine heavily shielded hot cells (which contain working areas called cubicles) that house equipment for target fabrication,

high-radiation-level radiochemical processing, and waste handling. In addition, the building is equipped with several laboratories that are used for process development, process-control analyses, and final TRU element product purification and packaging operations.

Since the mid-1960s, Building 1A has been the production, storage, and distribution center for the heavy-element research program of the United States Department of Energy (DOE). Target rods containing americium and curium are remotely fabricated in Building 1A, irradiated in an adjacent reactor facility, and then processed in the Building 1A hot cells for the separation and purification of the heavy actinide elements. Mark 42 target assemblies that were irradiated at Savannah River Site are also processed in the hot cells for the separation and recovery of high-purity ^{243}Am (plus ^{242}Pu and ^{244}Cm) for shipment to Los Alamos National Laboratory. Support and development for these operations and related isotope separations processes are performed in two small hot cells (called shielded caves) and in glove boxes in Building 1A.

Major program activities at Building 1B include (1) chemical processing of californium to produce high purity ^{252}Cf, (2) the fabrication of neutron sources from the ^{252}Cf, and packaging and shipping of ^{252}Cf sources, (3) recovery of ^{248}Cm from californium, and (4) providing neutron irradiation services for researchers. Californium-252 and ^{252}Cf neutron sources have been made available to DOE and other U.S. Government agencies since about 1967 as a co-product of the DOE heavy-element production program at ORNL.

Most solid wastes from the Generator 1 buildings are accumulated over a significant period of time, resulting in mixing of wastes from each campaign conducted during the period of accumulation. The wastes are a diverse and heterogeneous mix of materials resulting from hot cell operations, as well as from laboratory and support activities.

Waste Packaging

In the Bldg. 1A hot cell cubicles, waste items are typically placed into small containers (e.g., plastic buckets or metal cans) and monitored for radiation. To reduce the volume of waste, a low-temperature furnace in Cubicle 9 is used to melt small plastic items such as polyethylene bottles to consolidate them in a metal bucket. Waste buckets are characterized to assure that the waste forms in each bucket meet the waste acceptance criteria and are monitored for beta-gamma and neutron radiation. Buckets with low radiation levels are disposed in a drum for CH waste. Buckets containing RH TRU are transferred in sealed plastic buckets and unsealed plastic bags (Figure 1) for loading into a concrete cask (Appendix A) in the solid waste loading station. Larger equipment is loaded via the equipment transfer case into an onsite concrete storage cask. Before loading, the cask is prepared by placing a polyvinyl chloride plastic bag liner inside the cask. After the cask is loaded, the plastic bag is collapsed and an electrically-driven turntable inside the waste station rotates the cask, twisting the top of the bag. The bag is then cut and sealed with a hot-knife sealer. After a sealer is applied at the cask lid-body joint,

the cask lid is then installed and secured to the cask body by three anchor bolts aligned with holes drilled in the cask lid. The concrete cask is then transferred from Bldg. 1A (Figure 2) to storage.

CH TRU debris is typically packaged in drums or boxes. Smaller items are packaged in paint cans or other small containers and then collected in a drum. Larger items may be packaged in an oversized metal box.

Fig. 1. Remote Handled Waste in Bldg. 1A, Cubicle 9.

Fig. 2. Concrete cask being transferred from Bldg. 1A

Radiological Content

A representative radiological distribution of TRU debris waste generated at Bldg. 1A is provided in Table 1 and for Bldg. 1B in Table 2. Generator 1 typically generates approximately 3 concrete casks of RH TRU debris annually. In addition, approximately 15 drums and 3 metal boxes of CH TRU are generated annually with a similar radiological distribution to the RH TRU.

Table 1. Bldg. 1A Radiological Content of Debris Waste from Hot Cell and Facility Operations

Radionuclide	Activity (Ci/m^3)	Radionuclide	Activity (Ci/m^3)
Ag-110m	3.16E-02	Eu-155	1.49E+00
Am-241	1.41E+01	Np-237	3.41E-02
Am-243	1.13E+00	Pu-238	1.16E+00
Ce-141	8.92E-01	Pu-239	6.57E-01
Ce-144	2.88E-01	Pu-240	6.57E-01
Cf-249	6.23E-04	Pu-241	9.10E+00
Cf-250	2.64E-02	Pu-242	3.93E-02
Cf-251	1.15E-04	Pu-244	1.86E-07
Cf-252	1.02E+00	Ru-103	4.19E-01
Cm-242	8.47E-01	Ru-106	1.90E+00
Cm-244	7.48E+01	Sb-125	1.11E-01
Cm-245	2.10E-01	Sr-89	1.46E-01
Cm-246	4.86E-01	Sr-90	1.56E+01
Cm-247	7.35E-06	U-234	7.15E-06
Cm-248	2.61E-03	U-235	3.15E-07
Co-60	8.51E-02	U-236	3.60E-08
Cs-134	1.61E-01	U-238	2.54E-06
Cs-137	5.26E+00	Zr-95	2.27E-01
Eu-152	6.16E-02	**Totals**	**1.33E+02**
Eu-154	2.31E+00		

Table 2. Bldg. 1B Radiological Content of Debris Waste from Cell G

Radionuclide	Activity (Ci/m^3)
AM-241	2.68E-06
CF-249	2.35E-01
CF-250	3.97E+00
CF-251	6.02E-02
CF-252	1.02E+00
CM-245	4.71E-04
CM-246	2.80E-02
CM-247	6.48E-08
CM-248	4.22E-03
CM-250	8.03E-08
PU-241	1.93E-04
PU-242	7.49E-07
Totals	5.33E+00

Radiological Dose Rate and Contamination

The combined gamma and neutron dose rate goal at ORNL for the RH TRU concrete casks is 1 rem/h on contact but, on occasion, may range up to 2 rem/h. The combined gamma and neutron dose rate limit for the CH TRU drums is 200 mrem/h on contact. The contamination range of the TRU waste debris is difficult to determine but is known to be in excess of 10^8 dpm/100 cm^2 for alpha emitters in most cases.

Generator 2:

Over a period of 30+ years of service Generator 2 has handled a wide variety of reactor fuels and irradiated materials. Stainless steel, Inconel, and aluminum-based irradiation capsules (and associated hardware) were loaded with target materials and irradiated for a period of time in reactors. After irradiation, the capsules were brought into the Generator 2 hot cells for disassembly and target removal. The irradiated metals are comprised primarily of aluminum/zircalloy and Inconel/stainless steel. Based on neutron irradiation of these materials, they have become activated with various species of radioactive isotopes. Residual surface contamination may exist on these materials in association with spent reactor fuel that was handled in the hot cells as well.

Waste Packaging

RH TRU debris from Generator 2 is typically packaged in 55-gal drums and then packaged into the standard concrete casks for storage. Generator 2 generates approximately two 55-gal drums of RH TRU waste and less than 5 drums of CH TRU waste annually.

Radiological Content

A representative radiological distribution for TRU debris waste from Generator 2 is provided in Table 3.

Table 3. Bldg. Radiological Content of Waste from Generator 2

Radionuclide	Activity (Ci/m^3)
Ag110m	5.71E-01
Am241	1.02E+00
Ce144	7.80E+01
Cm242	3.90E+00
Cm243	3.06E-02
Cm244	9.10E+00
Cm245	6.03E-02
Cm246	3.43E-02
Co60	1.58E-01
Cs134	6.61E+01
Cs137	7.13E+01
Eu154	5.75E+00
Eu155	2.66E+00
Pu236	9.33E-05
Pu238	3.58E+00
Pu239	2.24E-01
Pu240	5.69E-01
Pu241	8.99E+01
Pu242	1.78E-03
Ru106	8.85E+01
Sb125	2.64E+00
Sr90	1.09E+02
Totals	**5.33E+02**

Radiological Dose Rate and Contamination

The combined gamma and neutron dose rate goal at ORNL for the RH TRU concrete casks is 1 rem/h on contact but, on occasion, may range up to 2 rem/h. The combined gamma and neutron dose rate limit for the CH TRU drums is 200 mrem/h on contact. The contamination range of the TRU waste debris is difficult to determine but is known to be in excess of 10^8 dpm/100 cm^2 for alpha emitters in many cases.

Other Generators

All other TRU waste streams are generated on an intermittent basis and are considered to be insignificant with respect to Generator 1 and 2 chemical components, radionuclide contribution, and waste quantities. These intermittent streams are collected in the generator facilities in 55 gal drums.

APPENDIX A

Concrete Cask Description

1. Cask dimensions are nominally 54” diameter x 89 3/4” high (not including lid lifting bail or other hardware). See ORNL drawing N3E017049A353 (below) for cask dimensions and details.

2. Cask weight (empty): 13,900 lb

3. Cask contents weight (max): 7500 lb

4. Cask lid does not seal to the cask body.

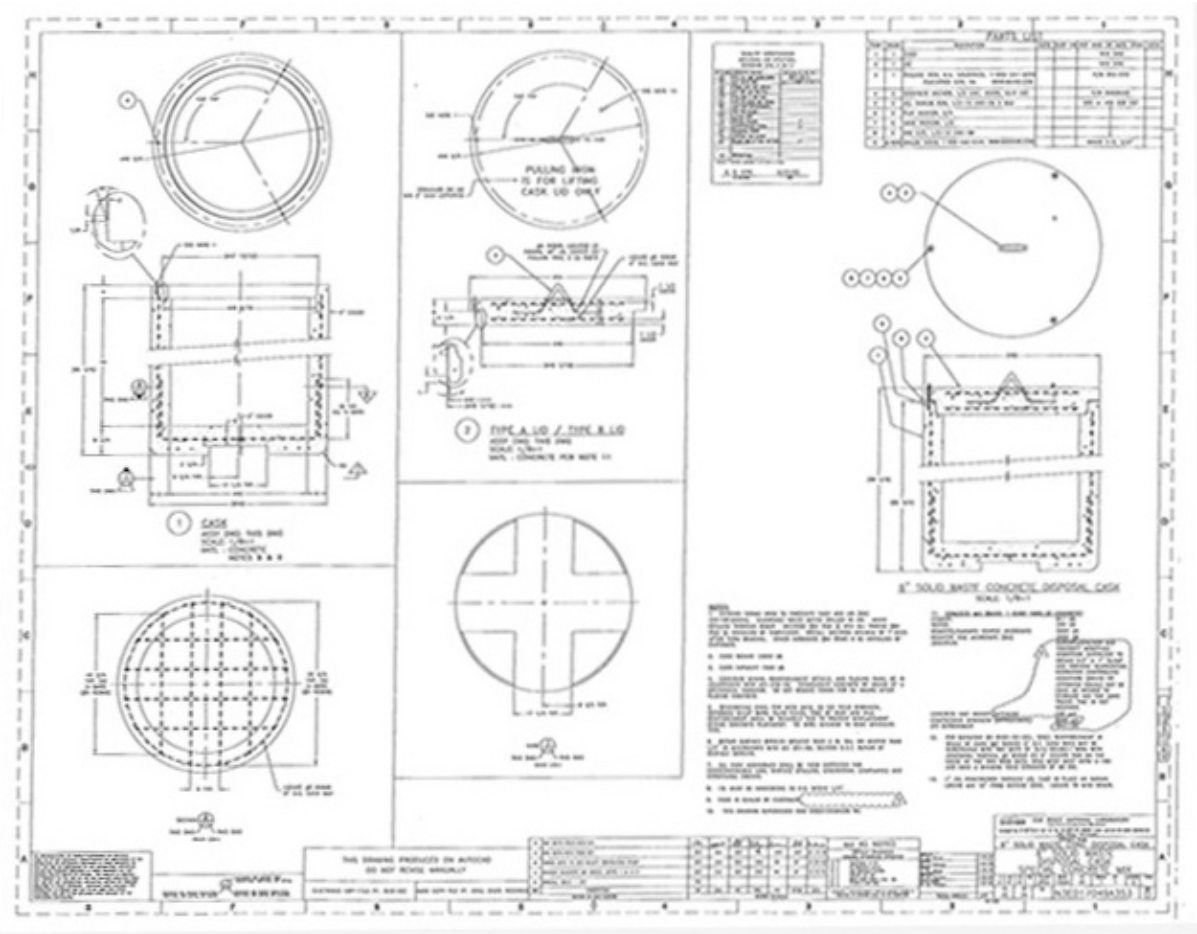

Attachment 2

Oak Ridge National Laboratory (ORNL) Liquid Low-Level Waste (LLLW) Generation Estimates for Vendor Expression of Interest
8/31/12

Background

LLLW is generated from several facilities located throughout the ORNL campus. LLLW is transferred from the generator facility to the current ORNL LLLW treatment system via underground piping, tanker truck, and/or trucked bottled waste. The current LLLW treatment system is expected to be taken out of service in ~2021 and is not expected to be available for the treatment of LLLW in the future.

Waste Streams

The streams requiring treatment in the future are listed in Tables 1 - 4. The waste generation information is based on future projects planned at ORNL beyond 2020.

Generator 1 is a major radionuclide contributor to the LLLW system. The stream typically has a pH ranging from 12 to 14. The nominal waste specific gravity is in the range 1.05 to 1.15. The primary constituents of the aqueous stream are sodium nitrate and sodium carbonate. The waste stream contains a small fraction of organic waste [less than 3% (v/v)]. The organic waste stream constituents may include some or all of the following: 2,5-dibutylhydroquinone, 2-ethylhexanol, petroleum naphtha (aka normal paraffin hydrocarbon, or NPH), di(2-ethylhexyl) phosphoric acid (HDEHP), Adogen-364, 1,4-diethylbenzene (DEB), tributyl phosphate (TBP), methanol, and xylene. Various metals, primarily corrosion products from stainless steel processing equipment, are present in the waste in small quantities. The waste as generated is expected to be nonRCRA.

The waste is presently collected inside the facility in an 850-gal tank and is periodically transferred to a 10,000-gal LLLW system collection tank near the facility via pipeline and then transferred to the existing ORNL LLLW treatment system. A typical composition of the waste stream that might be expected from Generator 1 composited over a two year period at a waste generation rate of 13,000 gal/yr is given in Table 2. The isotopic composition of the waste stream changes significantly with the type of work going on within the facility. Examples of the major constituents in waste streams that could be generated from facility processing operations (typically 6 – 9 month each in length) are given in Table 3. These estimates assume that each processing operation is conducted for an entire year and that 13,000 gal/yr of LLLW is produced.

Historical data indicates that the maximum compositions of specific radionuclides in the individual periodic waste discharges from the 850-gal tank located inside the Generator 1 facility to the 10,000-gal LLLW collection tank located outside the facility can be 3 – 6 times the campaign values listed in Table 3 depending on the operational phase of a processing campaign. The minimum values in these discharges for specific radionuclides may also be orders of magnitude lower than the average values.

The organic portion of the waste stream has the tendency to separate from the aqueous phase during storage. Historically, an organic layer has not been found in the existing ORNL LLLW storage tanks. It is believed that the organic is destroyed/evaporated during treatment at the existing LLLW evaporator prior to storage. A separate layer of organic may be present in the future if the evaporation step is removed from the treatment flowsheet. The radionuclide content of the organic phase can vary widely. Maximum concentrations of major transuranic constituents in the organic component can be several orders of magnitude higher than the average values listed in Table 2 based on historical data. The minimum values of these constituents may be orders of magnitude lower than the average values.

Generator 3 is the second major contributor to the LLLW system. Its estimated volume and radionuclide discharges are given in Tables1 and 4. This stream is presently collected in a 240-gal tank inside the generating facility and tanker trucked to the ORNL LLLW system for treatment.

All other waste streams are generated on an intermittent basis and are considered to be insignificant with respect to chemical components and radionuclide contributions. These intermittent streams are collected in the generator facilities in small tanks (typically ≤ 500 gal) or bottles and trucked to the ORNL LLLW system for treatment.

Table 1. Estimated future ORNL Liquid Low Level Waste streams

Wastewater Source	Projected Waste Generation Rate (gal/yr)	Expected Nuclides	Expected Chemicals
Generator 1	3,000-13,000	Cs-137, Sr-90, Cm-244, Cf-252, etc	1M salts: $NaNO_3$, NaOH, Na_2CO_3, NaCl, Na_2AlO, organics
Generator 3	1,200-4,400	Cs-137, Eu-152, Eu-154, etc	Insignificant
Other Generators	0-15,000	H-3, Be-7, Cr-51, Fe-55, Cu-64, Sr-90,Cs-137, Eu-152, Eu-154, etc.	Insignificant

Table 2. Estimated composite isotopic discharge for Generator 1

	Ci/gal	Ci/gal	Ci/gal	Ci/gal	Ci/gal	Ci/gal	Ci/gal	Ci/gal	Ci/gal	Ci/gal	Ci/gal	Ci/gal
WASTE STREAM	**Cs-134**	**Cs-137**	**Sr-90**	**Pu-238**	**Pu-240**	**Am-241**	**Cm-244**	**Am-243**	**Cm-245**	**Cm-246**	**Cm-247**	**Cf-252**
Composite	1.98E-02	1.61E-01	3.52E-02	4.71E-02	1.57E-05	8.01E-05	1.23E-03	5.52E-06	5.44E-08	3.70E-07	2.39E-12	1.49E-05

WASTE STREAM	**Ru-106**	**Sb-125**	**Eu-154**	**Eu-155**	**Np-239**	**Ru-103**	**Zr-95**	**Ce-141**	**Ce-144**	**Pu-239**	**Pu-241**
Composite	4.37E-01	2.12E-05	1.43E-03	2.56E-03	5.30E-07	1.93E-01	3.41E-01	1.23E-01	4.67E-01	1.69E-05	1.43E-03

Table 3. Estimated isotopic discharge for Generator 1 operations

	Ci/gal	Ci/gal	Ci/gal	Ci/gal	Ci/gal	Ci/gal	Ci/gal	Ci/gal	Ci/gal	Ci/gal	Ci/gal	Ci/gal
WASTE STREAM	**Cs-134**	**Cs-137**	**Sr-90**	**Pu-238**	**Pu-240**	**Am-241**	**Cm-244**	**Am-243**	**Cm-245**	**Cm-246**	**Cm-247**	**Cf-252**
Operation A	1.89E-02	1.36E-02	6.43E-04	1.56E-04	2.75E-05	2.72E-05	1.04E-03	0.00E+00	0.00E+00	0.00E+00	0.00E+00	5.11E-05
Operation B	1.22E-02	1.16E+00	2.19E-01	6.76E-05	3.07E-05	1.90E-04	8.90E-03	4.82E-05	5.08E-07	3.46E-06	2.23E-11	1.99E-05
Operation C	1.37E-02	3.29E-02	1.16E-02	4.71E-02	5.50E-06	5.29E-05	1.58E-05	3.57E-07	0.00E+00	0.00E+00	0.00E+00	0.00E+00

WASTE STREAM	**Ru-106**	**Sb-125**	**Eu-154**	**Eu-155**	**Np-239**	**Ru-103**	**Zr-95**	**Ce-141**	**Ce-144**	**Pu-239**	**Pu-241**
Operation A	1.37E-01	0.00E+00	0.00E+00	0.00E+00	0.00E+00	9.35E-02	2.35E-03	1.97E-01	1.75E-01	1.17E-07	9.68E-04
Operation B	3.09E-04	1.98E-04	2.08E-04	1.07E-05	4.95E-06	0.00E+00	0.00E+00	0.00E+00	0.00E+00	6.40E-08	5.27E-04
Operation C	4.03E-01	0.00E+00	1.41E-03	2.56E-03	4.85E-12	1.70E-01	3.40E-01	7.42E-02	4.23E-01	1.69E-05	1.13E-03

Table 4. Estimated isotopic discharges for Generator 3

	Gross Alpha	**Gross Beta**	**Cs-137**	**Eu-152**	**Eu-154**
Amount (Ci/gal)	8.4E0	5.6E-05	1.95E-06	5.6E-15	2.0E-13