H-204

B-46

DO NOT REMOVE THIS PAG

OAK RIDGE NATIONAL LABORATORY LIBRARY
3 4456 0018231 7

T NO. MON P-48
document contains 17
of Text and 8 Pages
gures.
is copy 38 of 47 Series A.

[redacted]

ISSUED TO: Col. Cook

5984
AUG 2 1946
K-25 OPERATIONS

1. This document contains information affecting the National Defense of the United States with the meaning of the Espionage Act, USC 50; 31 and 32. Transmission or revelation of its contents in any manner to an unauthorized person is prohibited by law.
2. Before this document can be read by a person other than the one to whom it is assigned, his name must be on the Library list of those authorized to read material on this subject, or permission must be obtained from the Assistant Director or the Director of the Information Department, or through an appropriate Section Chief or higher officer who must be convinced that the person needs to read the document for the success of his work.
3. This is a classified document and is to be kept only in a guarded area.
   SECRET material must be kept in a locked safe or in a locked filing case with tumbler lock.
   CONFIDENTIAL material must be kept in at least a locked filing cabinet.
4. A SECRET or CONFIDENTIAL document is not to be copied or otherwise duplicated without permission of the originating office. Extensive notes on the contents of a secret report must be taken only in a bound notebook with numbered pages having the designation SECRET. This must be safeguarded in the same way as a secret report. Other notes must be avoided, but if made must be done in a form meaningless to anyone but the writer and later destroyed.
5. The person or office to whom a SECRET or CONFIDENTIAL document is issued is accountable for the document at all times. Permission for transmission to another office other than that of the assignee must be obtained through the Information Office and recorded there.
6. As soon as the document is no longer needed it is to be returned to the Information Office whereupon the individual will be relieved of the responsibility for its safe-keeping.
7. The form below is to be used in routing this report and must be signed by each person who reads it.

Route to	Read by	Date	Route to	Read by
Capt. Luke				
Return to Classified Files				

OAK RIDGE NATIONAL LABORATORY
CENTRAL RESEARCH LIBRARY
CIRCULATION SECTION
4500N ROOM 175
LIBRARY LOAN COPY
DO NOT TRANSFER TO ANOTHER PERSON.
If you wish someone else to see this report, send in name with report and the library will arrange a loan.
ORNL-118 (6-97)

Classification changed to: UNCLASSIFIED

By Authority of: ~~ORNL Libraries Division~~ TID-1117
Y-12 Technical Library
By: ~~Document Reference Section~~ Date: 2-13-57
X-906 Building 9711-1

[redacted]

[redacted]

MonP-48

Contract No. W-35-058, eng. 71

* * * * * * *

SECTION I

A. H. Snell, Section Chief

* * * * * * *

FINAL REPORT

CRITICAL EXPERIMENTS ON FLUORINATED AND HYDROGENATED MIXTURES CONTAINING ENRICHED URANIUM

PROBLEM ASSIGNMENT PX14-1

Work done by:

P. H. Abelson
C. P. Baker
E. C. Barker
F. C. Hoyt
J. Kupferberg
H. W. Newson
E. F. Shrader
A. H. Snell

Report written by:

A. H. Snell

Series A Recieved: 1/21/46

Series A Issued: 1/22/46

November 30, 1945.

OAK RIDGE NATIONAL LABORATORY LIBRARY

3 4456 0018231 7

This d[redacted]
the na
the m
31 an
conte
is pr

[redacted]

ABSTRACT

Experiments are described on the critical sizes of assemblies of fluorinated, hydrogenous mixtures containing 24% enriched uranium. A hydrogenous reflector was used. The critical masses of the uranium as a function of the amount of hydrogen in the mixture under the experimental conditions of density and effective molecular weight were as follows:

No. of Atoms H per Atom U.	Density of Mixture	Effective Molecular weight	Critical Mass of 24% U.
30.9	1.67	654	14.9 kg
15.1	1.95	537	25.2
11.0	2.14	506	34.2

The effect of cadmium and boron shielding between the uranium mixture and the surrounding reflector was also studied, and an experiment was made on varying the shape from a cubical to an elongated geometry. An attempt is made to interpret the criticality results in terms of pure UF_6, leading to the result that at this isotopic concentration, and a density of 4.5, about 36 kg of UF_6 would be critical if lumped surrounded closely by hydrogenous material.

[redacted]

[redacted]

[redacted]

INTRODUCTION

In another report[1] an account has been given of experiments designed to indicate the safety against criticality of vessels containing UF_6, under varying conditions of neutron reflection from surroundings, and of protection by cadmium and boron coatings. The measurements were taken with nearly normal material, under conditions far from critical. The temporary availability of some material of higher enrichment has now allowed the experimentation to proceed a step further. This report describes experiments on the size of actual critical assemblies of fluorinated mixtures, in hydrogenous reflectors and with hydrogenous material mixed into the active body. The effect upon criticality of cadmium and boron coverings was also studied directly, and an experiment was made involving variation of the shape of assembly.

EXPERIMENTAL

For the sake of safety and flexibility, UF_6 itself was not used for these measurements. Instead, a mock-up mixture of enriched U_3O_8 and fluorocarbon was made. U_3O_8 was chosen in preference to UO_3 because of the hygroscopic nature of the latter. The fluorocarbon was in the form of oil known as 2144. The mixture was pasty, and it was necessary to package it in cubes covered with aluminum foil 0.005 inches thick; in size the cubes were mostly 1" x 1" x 1". The average effective composition of the mixture as stacked

---

[1] Snell, et al., MonP-47

[redacted]

 [redacted]

in the critical assembles could be expressed as

$$UO_{2.83}\ C_{5.30}\ F_{3.60}\ Al_{0.4}\ .$$

in which the Al fraction was somewhat variable from one assembly to another, but was unimportant in any case. The corresponding proportions by weight are:

U:55.8%; O:10.6%; C:15.0%; F:16.1% and Al:2.5%

From their known scattering and absorption cross-sections, the carbon, oxygen and aluminum could be expected to have only a small effect on the pile insofar as neutrons were concerned. Apart from its density (3.5 for the mix, but considerably lower as actually stacked), this mixture was, therefore, a reasonable and practical approximation to UF_6. It would have been slightly preferable to have a higher fluorine content, but the admixture of more 2144 would have resulted in a substance too soupy for use in a building-block structure.

The preparation of the material and the packaging were done for us at the point of origin. A detailed analysis of the material was also given us; it is reproduced in the appendix.

The experimental arrangement is indicated in Fig. 1. Since all measurements were to be taken in the presence of a hydrogenous reflector, a bed of paraffin six inches thick was arranged on a table top. The assemblies of cubes were rectangular, and they were erected on the center of

[redacted]

[redacted]

the paraffin bed. Paraffin blocks were built around the four sides and on the top, so as to provide a complete hydrogenous reflector or "tamper" six inches thick. For such assemblies as actually became critical, the final approach was made by adding the last blocks of paraffin to the tamper. The assemblies of cubes of active material sometimes required structural reinforcement, and this was provided by aluminum trays, which were laid horizontally at two-inch intervals and arranged with spacers as indicated in the figure, which carried the weight of the overlying layers and reduced the squeezing of the oily mixture from its aluminum-covered cubes.

An aluminum tube 7/8 inches in diameter, running vertically through the tamper down to a position near the center of the pile, served for the insertion of a neutron source for multiplication measurements. These extra amounts of aluminum are included in the average composition of the pile as given above.

As a safety precaution, one side of the paraffin reflector was built upon a hinged leaf attached to the table. This leaf was supported by a prop, which could be jerked out either by a solenoid or by hand, using a long cord. The solenoid was actuated by a "Monitron"[2] placed about ten feet distant. If the radiation should exceed a certain level, it would then trip the monitron, which would actuate the solenoid, thereby dislodging the prop and dropping one face of the reflector away from the pile.

As measuring instruments, four slow neutron detectors were set up as follows: (1) A BF_3 chamber outside of the reflector, connected to a

[2] C. Ballou, CP-3104

[redacted]

 [redacted]

D. C. amplifier and an Esterline-Angus recorder. This instrument was used only for visual observation of the level of assemblies that actually became critical; (2) a flat fission chamber, six inches square, containing about 100 mg of U^{235}. This chamber was placed inside the reflector, directly below the pile; (3) two boron proportional counters, which were set up outside of the reflector, about 24 inches from the center of the pile. The positions of these four detectors are shown in Fig. 1.

For those assemblies which did not reach critical, a 500 mg Ra-Be source was placed in the vertical aluminum tube in the pile, and the reciprocals of the counting rates on the boron counters and the fission chamber were plotted against the amount of material in the usual manner. Extrapolation to zero reciprocal counting rate then gave some idea of the critical mass.

In most of the assemblies, some hydrogen was mixed into the active pile. This was done by building lattice structures with alternating blocks of the mix and of polythene plastic. The dimensions of the lattice elements were, however, not small compared with the presumed mean free path of the neutrons in the pile, and, therefore, a "correction for inhomogeneity" was necessary to express the critical masses in terms of a uniform distribution of the hydrogen in the material. Dr. Teller indicated how this can be applied. If the critical mass for the homogeneous arrangement is taken as i times the critical mass for the heterogeneous arrangement, then i is given by

$$i = \frac{1}{C + (1-C)R} \qquad (1)$$

[redacted]

 [redacted]

where C is the average inverse cadmium ratio for U^{235} fission, i.e. the ratio (activity of Cd-covered foil)/(activity of uncovered foil) and R is given by

$$R = \frac{1 + \frac{A_H}{A_M} \cdot \frac{N_H}{N_{235}} \cdot v \cdot \frac{\sigma_a(H)}{\sigma_f(235)}}{1 + \frac{N_H}{N_{235}} \quad v \quad \frac{\sigma_a(H)}{\sigma_f(235)}} \qquad (1a)$$

in which A_H/A_M is the ratio of an average thermal neutron densities in the hydrogenous blocks and in the mix, N_H/N_{235} is the ratio of the number of atoms of hydrogen to the number of atoms of U^{235} in the pile, $\sigma_a(H)/\sigma_f(235)$ is the ratio of self-evident cross-sections, viz. 0.31/550, and v is the volume ratio of polythene to mix in the assembly. Furthermore, we have

$$N_H/N_{25} = \frac{15\ v}{0.24}$$

in which the figure 15 is derived from the density and composition of the polythene and the mix (see appendix) and the figure 0.24 is the isotopic abundance of 235 in the uranium. R can then be written

$$R = \frac{1 + 0.035\ A_H v^2/A_M}{1 + 0.035 v^2} \qquad (1b)$$

[redacted]

 [redacted]

The measurements required for the correction for inhomogeneity are, therefore, (1) the average thermal flux through the cubes of mix and polythene; (2) the average cadmium ratio for U^{235} through the cubes of mix and polythene. To obtain these quantities, a few cubes were split into halves, and small foils of indium and 24% enriched U_3O_8 were prepared. These foils measured 1" x 1/4", and when laid centrally between the halves of the split cubes, built into the pile, and activated by running the critical assemblies at a sufficient power level, they gave measurements of the required average fluxes and cadmium ratios. In the case of the U_3O_8 foils, gamma rays were counted so as to reduce the natural UX background, and the activities were measured about 2 hours after activation in order to eliminate the effect of the 23-minute U^{239}; thus only fission product gammas were counted. Such measurements were made with and without cadmium. Corrections were made for foil weights, and activations were kept to the same duration and normalized for intensity by an integrated count on one of the boron counters.

EXPERIMENTAL RESULTS

It seems most straightforward to describe the various assemblies, subcritical and critical, approximately as they were built and measured. It is easiest to express the dimensions in terms of the cubes. Actually, the cubes were not exactly 1" x 1" x 1", and they did not pack perfectly, e.g. a base 11 cubes by 11 cubes would measure 11-5/8" x 11-5/8". To

[redacted]

 [redacted]

cover this imperfection of stacking, a mean density will be given for each pile. The lattices used are characterized by their respective values of v, which is taken as the ratio of the number of polythene cubes to the number of cubes of mix.

Pile No. 1 (Pure Mix) $v = 0$

This pile was made entirely of the cubes of $U_3O_8 - CF_2$ mixture, with no added hydrogen. It was built on a base 11 x 11 cubes, and when a height of 10 layers was attained, it contained all of the available enriched material. This amounted to 71.1 kg of the mix. The effective density as derived from these figures was 2.98.

Even when completely paraffin-tamped, this pile was far from critical. Only a slight neutron multiplication was apparent, as can be seen from the following counting rates taken with the Ra-Be source in the pile:

Pile Height	Counting Rates (counts per min)	
	Boron Counter #1	25 Chamber
10 layers	24.3 x 64	48.7 x 64
8 layers	21.6 x 64	44.0 x 64

The neutron multiplication is so small that a guess as to the critical size would be most uncertain.

[redacted]

 [redacted]

Pile No. 2 v = 2. Mean stacked density 1.67

This pile was built in a lattice structure such as is indicated in the insert of Fig. 5. Built on a base of 11 cubes x 11 cubes, it became critical at a height of 12 layers less 9 cubes of mix, or 11.8 layers. It then contained 471 cubes or 28.9 kg of mix, and 15.5 kg of polythene, and its effective composition was $UO_{2.83}\ C_{21.8}\ F_{3.60}\ Al_{0.4}\ H_{30.9}$. The foils for the measurement of the correction for inhomogeneity were placed in the sixth layer from the bottom. The counts were as represented in the following diagram, in which "P" means polythene and "M" means mix; and the subdivisions are intended to indicate the cubes:

Composition of 1" cubes	M	P	P	M	P	P	M
In foil act. (A_H and A_M)	214	384	524	298	550	541	323
Inverse Cd ratio for 25 (C)	0.10	0.076	0.10	0.20	--	--	--

↑ Face of pile ← 1" → ↑ Axis of pile

Taking mean values of A_H, A_M, and C, one obtains on insertion into the formulae (1) a value for i of 0.92. The pile, if homogeneous, would, therefore, have been critical at a total mass of 43 kg instead of a total mass 46.7 kg as actually built.

For the critical sizes of piles of this composition when covered with cadmium or boron, see piles No. 8 and No. 9.

[redacted]

[redacted]

Pile No. 3 v = 1. Mean stacked density 1.95

The cubes were built up in a simple cubic lattice, on a base which measured 11 x 11 cubes. The pile became critical, when completely tamped, at a height of 12 layers plus 6 additional rows. It then contained 45.7 kg of the mix and 12.1 kg of polythene. The effective composition was $UO_{2.83}\ C_{13.4}\ F_{3.60}\ Al_{0.4}\ H_{15.1}$.

The measurements for the correction for inhomogeneity were in the seventh layer from the bottom. The results of the measurements were as follows:

Composition of 1" cubes:	P	M	P	M	P	M
Indium foil activity (A_H and A_M)	149	108	169	157	193	139
Inverse Cd ratio for 25 (C)		0.18	0.16	0.40	0.21	

↑ Face of pile ← 1" → ↑ Axis of pile

These figures give mean values for A_H/A_M and for C of 1.26 and 0.29 respectively. Insertion of these figures in the formulae (1) gives a correction factor i for inhomogeneity of 0.99.

Effect of cadmium

Cadmium sheets were placed on the four sides and top of the pile, inside of the paraffin reflector, and counts were taken at different pile heights for an extrapolated determination of the critical mass. The results are plotted in Fig. 2. Extrapolation is very uncertain,

[redacted]

[redacted]

but one might guess that the pile could become critical at a height of 20 to 24 layers. This, however, would be an unfavorable shape, and probably the best we can do is to guess that a complete covering of cadmium might increase the critical mass of a paraffin-surrounded pile of this composition by a factor of about 2.

Pile No. 4 $v = \frac{1}{3}$. Mean stacked density 2.35

This pile was built on a base of 11 cubes x 11 cubes, in a lattice as shown in the insert of Fig. 3. It reached a height of 13 layers without becoming critical, although completely paraffin tamped. It then contained 64.0 kg of mix and 8.4 kg of polythene. Its effective composition was $UO_{2.83}\ C_{9.3}\ F_{3.6}\ Al_{0.4}\ H_{7.5}$. Neutron counts were taken with the Ra-Be source in the central tube after each of the first few layers was removed during the disassembly, and the resulting plot is given in Fig. 3. There was not enough neutron multiplication to permit reliable extrapolation to the critical size.

Pile No. 5 $v = 3/4$. Mean stacked density 2.14

This pile was stacked on a base of 11 cubes by 11 cubes, according to the lattice pattern indicated in Fig. 4. It became critical at a height of 14-4/11 layers, when completely paraffin-tamped. It then contained 992 cubes or 62 kg of mix and 744 cubes or 11.9 kg of polythene. The effective composition was $UO_{2.83}\ C_{11.1}\ F_{3.6}\ Al_{0.4}\ H_{11}$. Measurements

[redacted]

 [redacted]

were taken for the inhomogeneity correction in the seventh layer from the bottom, the results being as follows:

Composition of 1" cubes	P	M	M	P	M	
Indium foil activity(A_H and A_M)	191	107	129	204	159	
Inverse Cd ratio for 25	0.11	0.23	0.31	0.21		
	↑ Face					↑ Axis

Insertion of the respective average values for the three mix and the two polythene cubes into the formulae (1) lead to $i \cong 0.99$.

To try to obtain an idea of the effectiveness of a cadmium coating on this pile, sheets of cadmium were placed between the pile and the paraffin on the top and the four vertical sides. Neutron multiplication measurements were then made as the pile started to be disassembled, and the reciprocal counting rates are plotted in Fig. 4. It is impossible to deduce a critical mass from this plot; all one can say is that the cadmium on five faces reduced a critical assembly to one that was far from critical. The effect of cadmium seems to be larger than it was for Pile No. 3, which contained more hydrogen (compare Figs 4 and 2); this is clearly to be expected.

<u>Pile No. 6 and Pile No. 7</u> <u>Effect of cadmium and boron</u> $v \cong 2$.

Mean stacked density 1.67

These two piles were built with the object of testing the effect upon critical size of a complete cadmium (pile #6) or boron (pile #7) shield between the pile and hydrogenous tamper. The lattice was that of pile No. 2 and is shown in Fig. 5. It will be recalled that pile #2

[redacted]

became critical for a mix content of 31.2 kg. Pile No. 6 was built on base 14 x 14 cubes, and became critical at a height of 12-10/14 layers, when paraffin-tamped outside of the cadmium. Its mix content was then 51.4 kg, and the cadmium had increased the critical mass by a factor of 1.7.

A test of the effect of a safety rod was made in pile No. 6. A boron-filled aluminum tube, 5/8" in diameter, was inserted vertically to a depth of 6 inches at a point five inches from each of two adjoining vertical faces. Counts were taken, and their reciprocals are plotted in Fig. 5. It looks as if criticality would have been reached at about 13½ layers, which would mean that the boron rod increased the critical mass by only 6%.

The boron covering used in pile No. 7 consisted of flat hollow iron shields, filled with boron carbide or calcium boride, and bolted together to make a hollow cubical box. The iron walls of the shields were 1/8" thick. They were weighed before and after filling, and the surface density of the boron was found to be 1.2 g/cm^2. The pile was built on a base 14 x 14 cubes, and Fig 6 shows the plot of reciprocal counting rates. The critical height is clearly close to 12.6 layers. There was a complete paraffin reflector outside of the boron sheild.

It seemed curious that the boron-covered pile No. 7 became critical at a slightly smaller mass than the cadmium-covered pile No. 6. Since the restacking might have changed the mean density a little, a more direct comparison was made by replacing the boron on the top and the four sides of

 [redacted]

pile No. 7 with cadmium. The counting rates with the source inserted were taken in both cases, and those for the completely boron-covered pile were several per cent higher. The boron shield, as used, was therefore a little less effective than the cadmium. Possibly the explanation for this lies in scattering from the 1/8" thickness of iron between the lattice and the boron, which was not present when the cadmium was in place.

<u>Pile No. 8 and Pile No. 9</u> <u>Test of elongated geometry</u> v = 2.

Mean stacked density 1.67

These two piles were built of the lattice shown in Fig 6, and were completely paraffin-tamped, without cadmium or boron. They were elongated horizontally. The 25 chamber was under the central part, and the source hole was in the center. Pile No. 8 was started on a cross section of 8 cubes x 8 cubes, and was lengthened symmetrically by adding a layer on both ends between readings. Counter No. 2 was on the perpendicular bisector of the axis of the pile. The plots of the reciprocal counting rates in this counter and in the 25 chamber, as a function of length, are given in Fig. 7. The curves flatten so much that it is doubtful if the pile could ever be made critical by increasing its length.

Pile No. 9 was similarly built, except that its cross section was 9 cubes x 9 cubes. It became critical at a length of 24.7 layers. The counting rates as it approached critical are plotted in Fig. 7 for comparison with those of pile No. 8.

For the critical size of a nearly cubical pile of the same composition, see pile No. 2.

[redacted]

It is difficult to deduce information of a general nature from these few measurements. We shall content ourselves with the observation that this hydrogen-uranium mixture, which became critical in a paraffin-tamped 11 x 11 x 11 cube would probably also become critical in a long, paraffin-tamped parallel piped with a cross section $8\frac{1}{2}$ x $8\frac{1}{2}$, and that further reduction in the cross section would demand great increases in length for criticality until at 8 x 8, even an infinite length would be subcritical. Incomplete as it is, this information may be of use in the design of piping which must be held below critical, for a safety factor can be applied which easily overshadows the inaccuracies in the experimental results.

SUMMARY AND DISCUSSION OF RESULTS

The following table gives collected results for all piles which actually became critical, with explicit statement of the N_H/N_U ratios, as derived from the stacked amounts of polythene and mix, expressing the critical masses in terms of uranium.

Pile No	v	N_H/N_U	Stacked Density	Critical Mass of Enriched U in Heterogeneous Pile	Ciritcal Mass of Enriched U in Homogeneous Mix.
2	2	30.9	1.67	16.2 kg	14.9 kg
3	1	15.1	1.95	25.5	25.2
5	3/4	11.0	2.14	34.6	34.2
(Cd-Covered) 6	2	30.9	1.67	28.7	

[redacted]

Because of the limited amount of material, its rather low density, and its high molecular weight, we were unable to obtain a direct criticality for the quantity of prime interest, viz., the critical mass for UF_6 containing 24% enriched uranium. From the critical masses of the hydrogen-containing mixtures actually built, one may however examine the trend as the hydrogen content is reduced. Fig. 8 is a logarithmic plot of the critical mass against the N_H/N_U ratio. Making use of the knowledge that the critical mass must be finite for small values of N_H/N_U, and that therefore the curve must flatten, it seems reasonable to conclude that the critical mass for pure mix would have been between 75 and 230 kg, with the most probable value at 110 kg. In considering the interpretation of this result in terms of UF_6, it is most important to take into account large correction factors arising from the difference in molecular weight and possible differences in density. The critical mass can be expected to vary as (molecular weight)^3 x (density)$^{-2}$ in the absence of a hydrogenous reflector and perhaps as (molecular weight)$^{2.4}$ x (density)$^{-1.6}$ when such a reflector is present. If solid UF_6 has a density 4.5, the critical mass would be probably about 36 kg when surrounded by a hydrogenous reflector, but it might be as low as 25 kg. This estimate is in fact in fair agreement with the results of the work described in Report MonP-47 on the nearly normal UF_6. If one stretches the figures to their most dangerous extreme; viz., a density of 5 for the UF_6, variation as (density)$^{-2}$ x (molecular weight)^3, and 75 kg for the critical mass of the mix, one can arrive at a lower limit of 10 kg for the critical mass of UF_6 containing 24% enriched uranium.

[redacted]

APPENDIX

The following data on the physical properties and chemical constitutions of the various substances used for these experiments were kindly supplied by the people who prepared the material:

(1) Composition of mix:

Weight ratio of U_3O_8 to fluorocarbon	Mass
2.38 : 1	16,822.3 g
2.11	25,431.1
1.90	20,903.7
1.75	3,307.8
2.71	4,604.3

Weighted mean composition: 67.8% U_3O_8, 32.2% fluorocarbon.

(2) Analysis of fluorocarbon: 51.8% F by weight

Effective composition: $C_{1.46}F$.

(3) Weight of aluminum on each 1" cube of mix: 1.5 g.

(4) Composition of polythene: 13.5% H by weight.

Effective composition: $CH_{1.87}$

(5) Weighted average percent U in the U_3O_8: 84.04% (by weight)

Effective composition: $UO_{2.82}$

(6) Weighted average isotopic constitution of the uranium: 23.96% U^{235}.

(7) Density of polythene: 0.915

(8) Density of mix: 3.5

[redacted]

[redacted]

DR. NO. 1866
11/30/45

EXPERIMENTAL ARRANGEMENT OF CRITICAL ASSEMBLIES

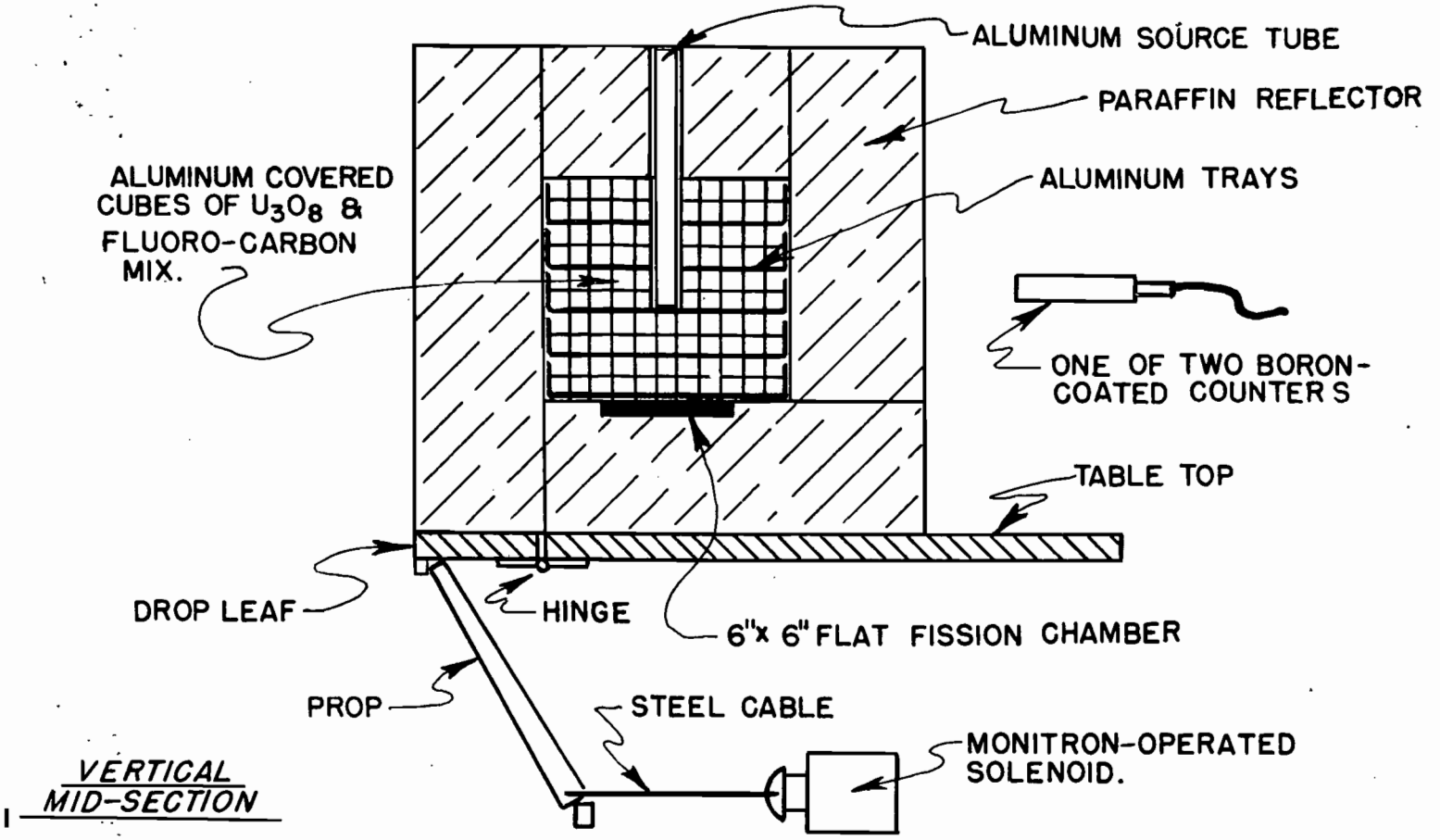

VERTICAL MID-SECTION

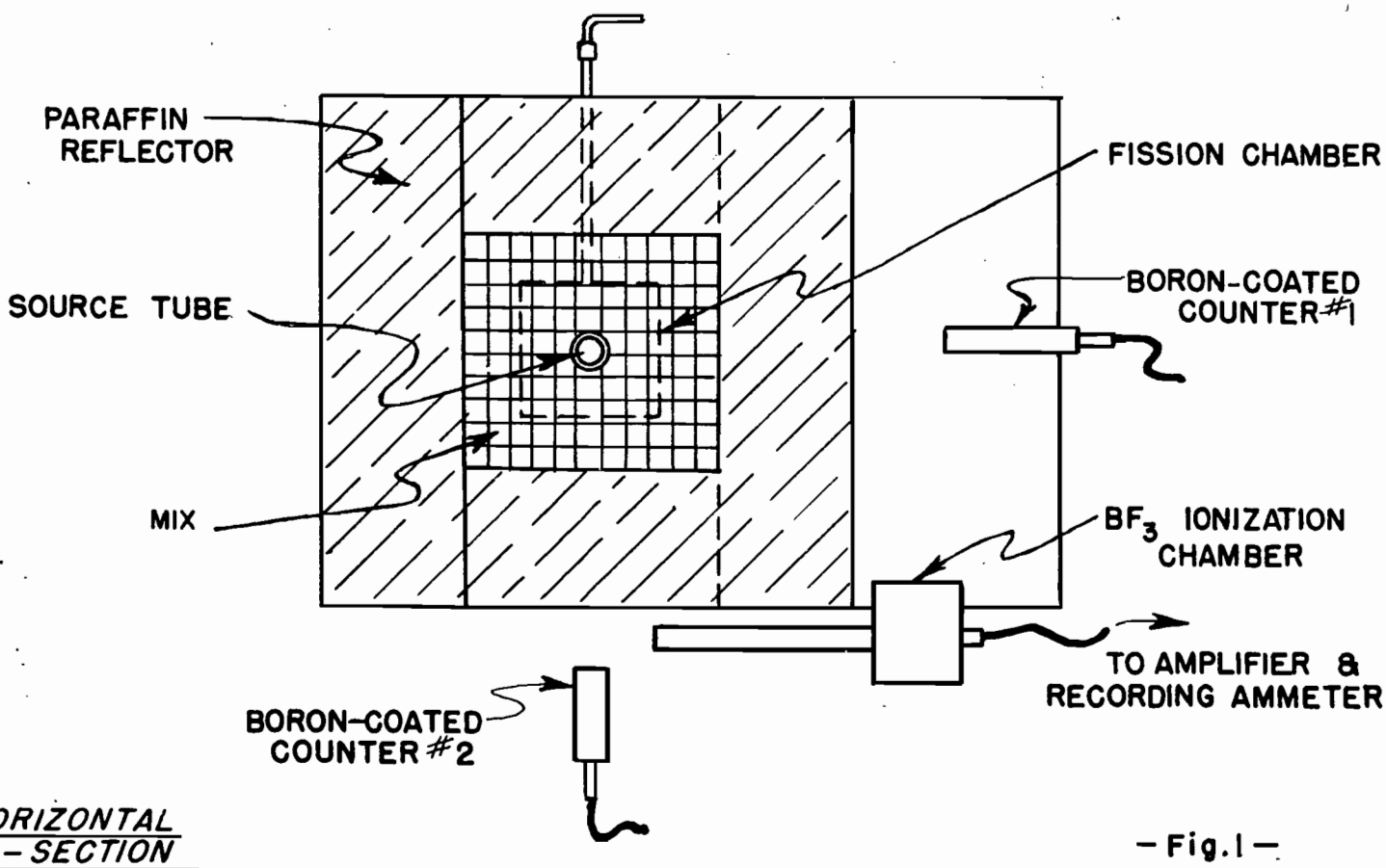

HORIZONTAL MID-SECTION

SCALE

— Fig. 1 —

[redacted]

NO. 340-20 DIETZGEN GRAPH PAPER
20 X 20 PER INCH
EUGENE DIETZGEN CO.

[redacted]

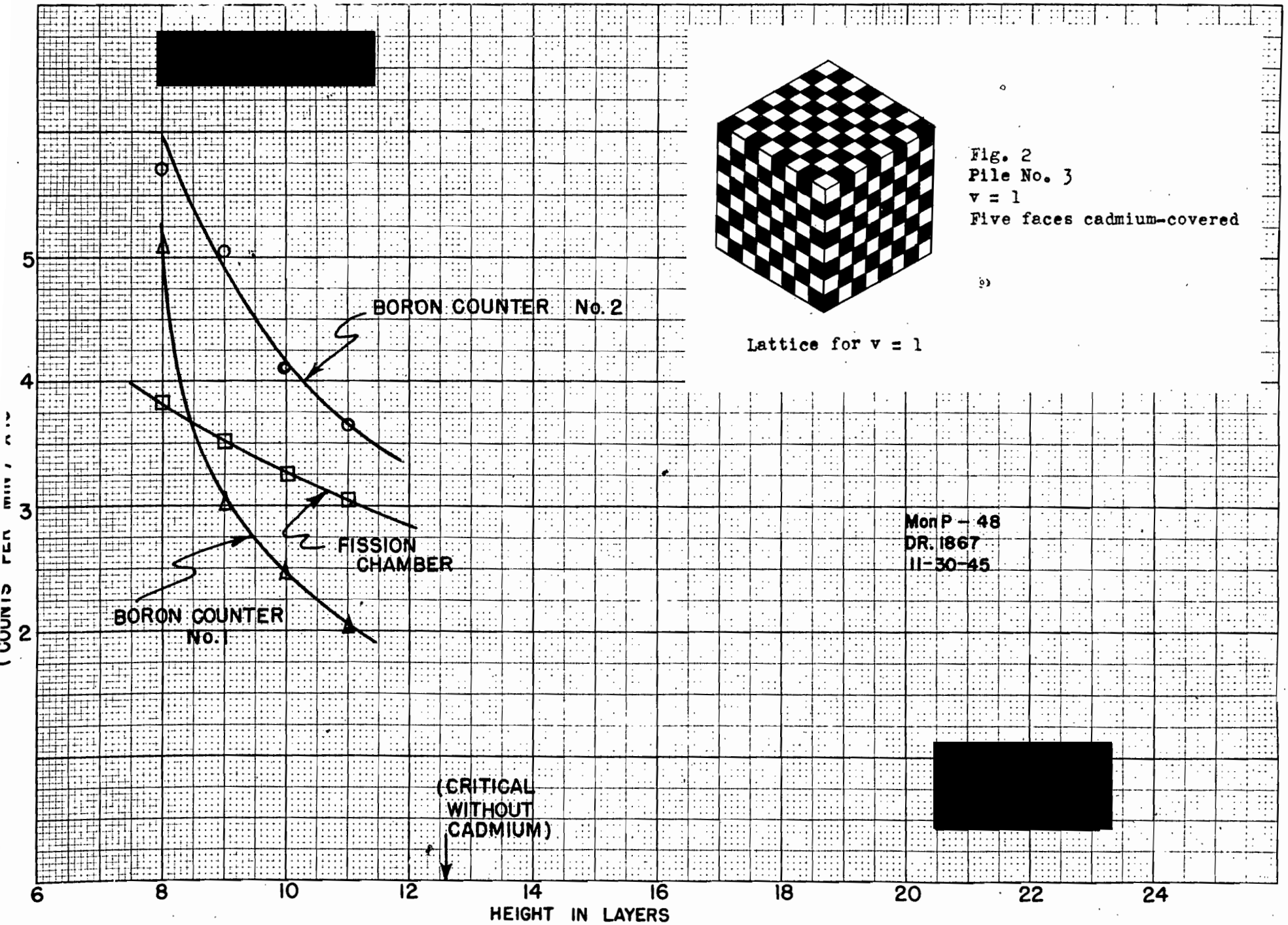

Lattice for v = 1

Fig. 2
Pile No. 3
v = 1
Five faces cadmium-covered

[redacted]

NO. 340-20 DIETZGEN GRAPH PAPER
20 X 20 PER INCH

[redacted]

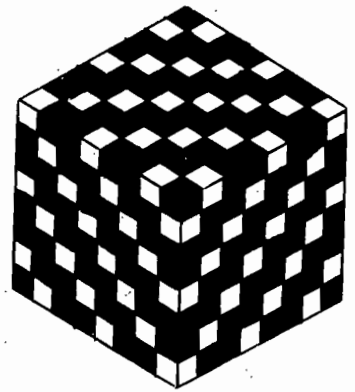

Lattice for v = $\frac{1}{8}$

Fig. 3
Pile No. 4
v = $\frac{1}{8}$

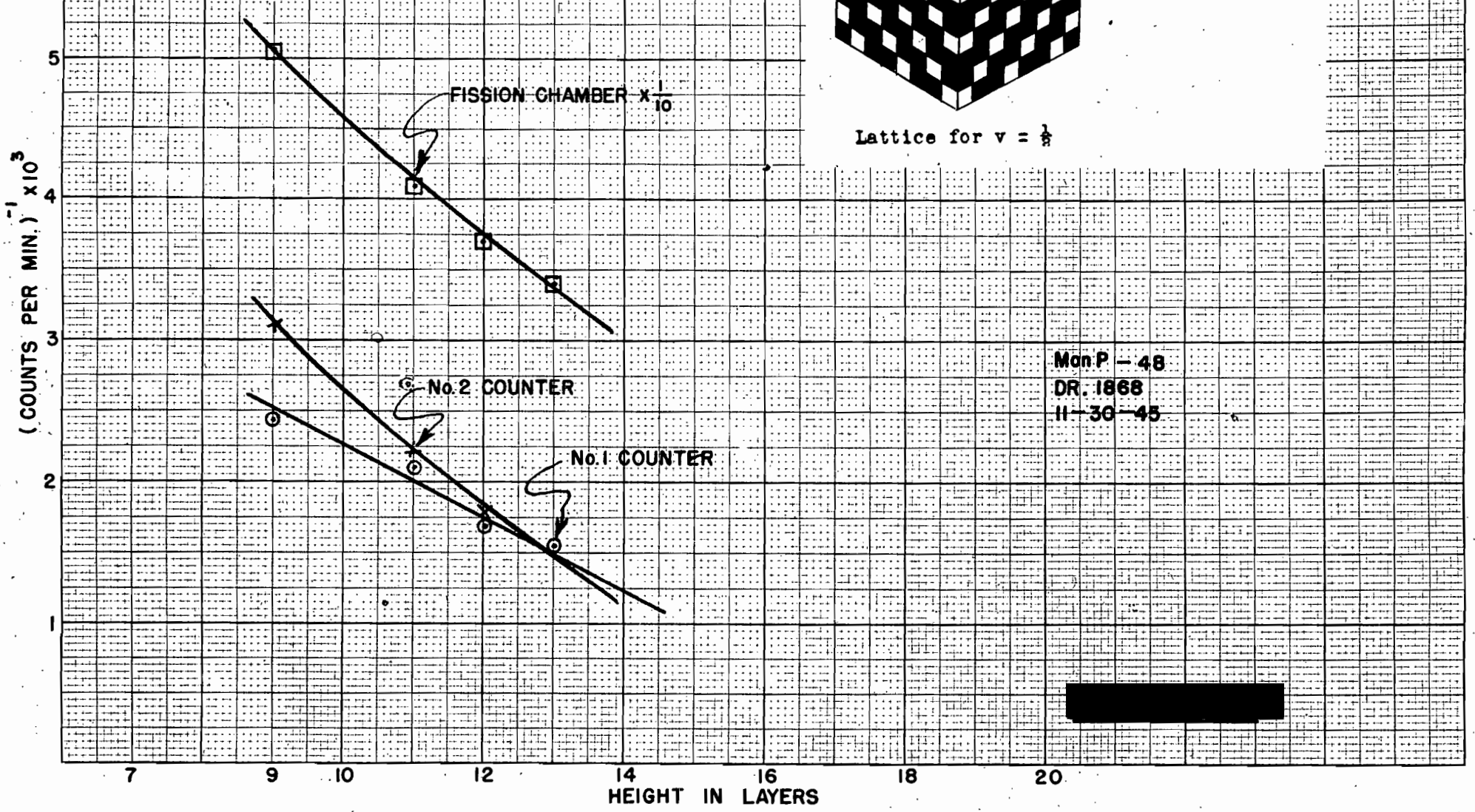

Man P – 48
DR. 1868
11–30–45

[redacted]

NO. 340-20 DIETZGEN GRAPH PAPER
20 X 20 PER INCH
EUGENE DIETZGEN CO

[redacted]

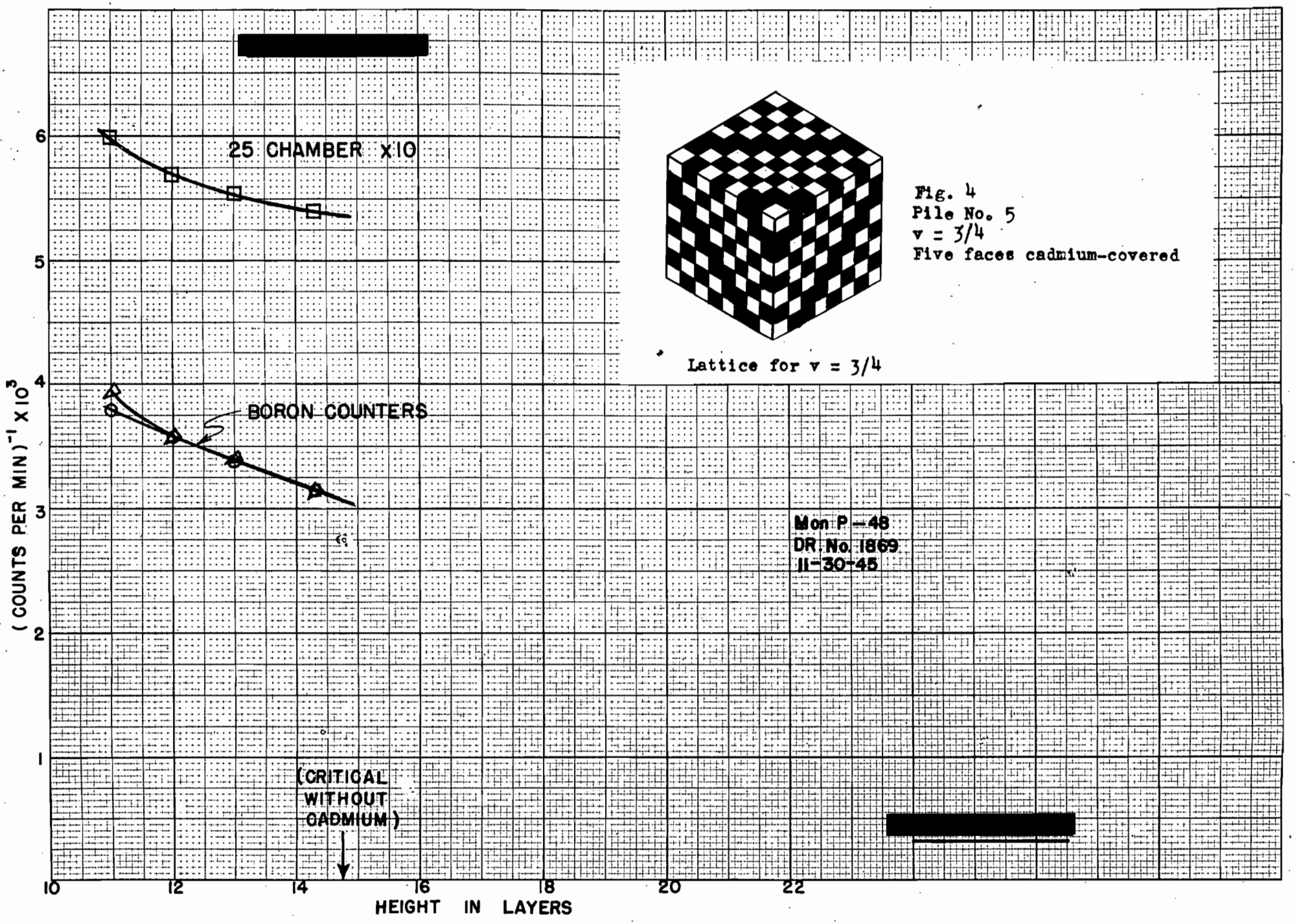

[redacted]

[redacted]

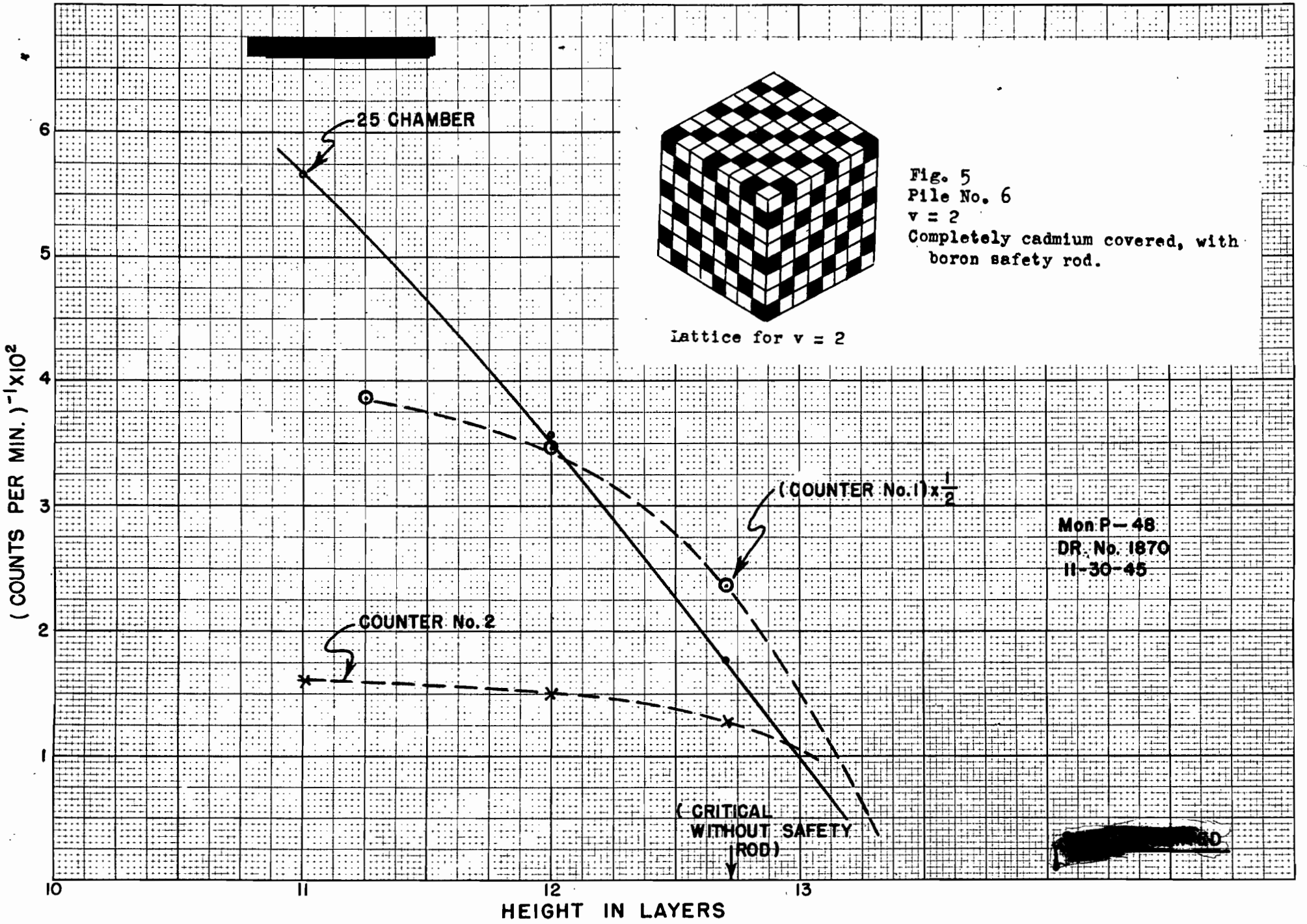

Lattice for v = 2

Fig. 5
Pile No. 6
v = 2
Completely cadmium covered, with boron safety rod.

[redacted]

20 X 20 PER INCH
EUGENE DIETZGEN CO.

[redacted]

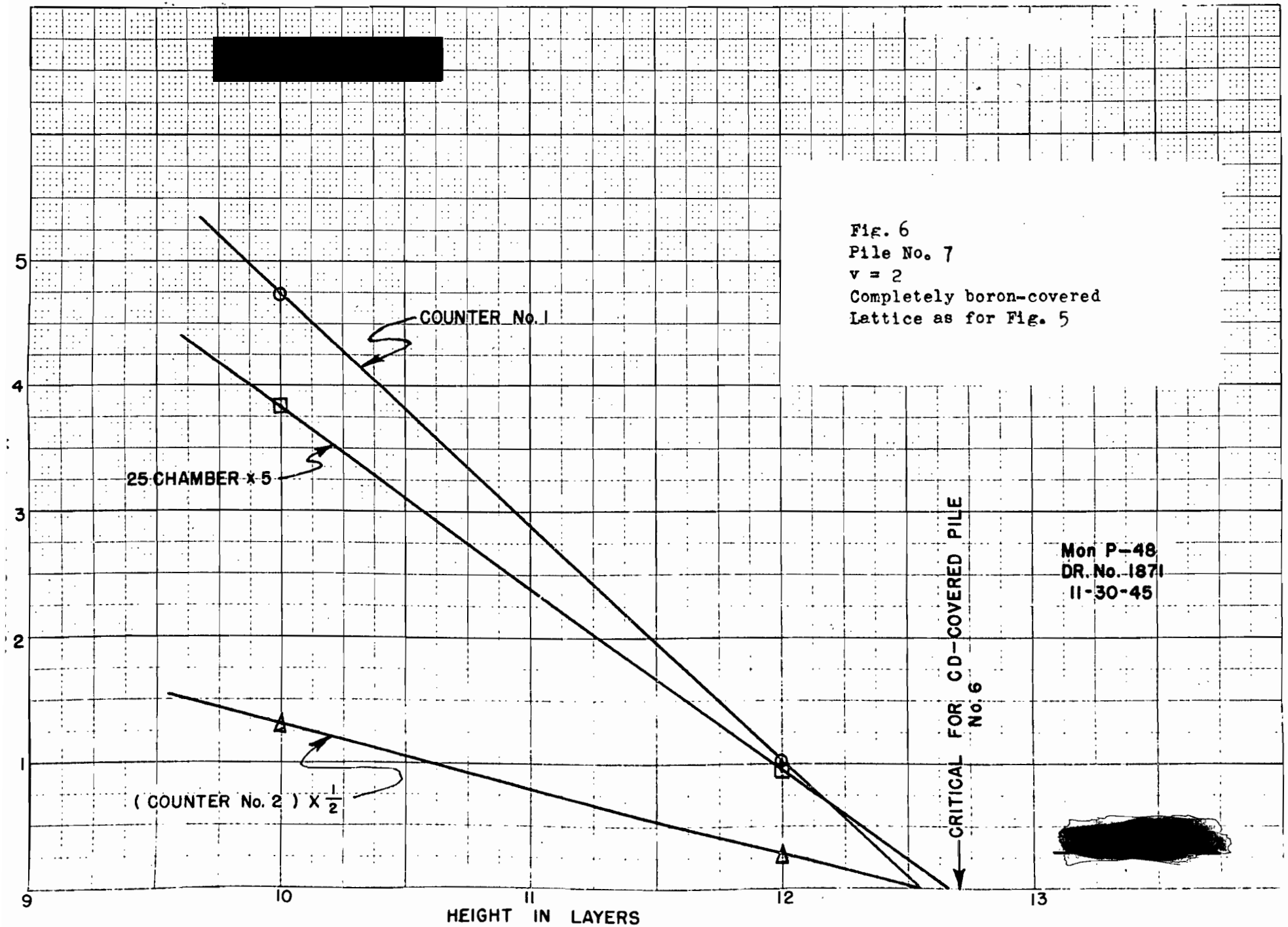

Fig. 6
Pile No. 7
v = 2
Completely boron-covered
Lattice as for Fig. 5

[redacted]

NO. 31B. 20 DIVISIONS PER INCH BOTH WAYS. 150 BY 200 DIVISIONS.
CODEX BOOK COMPANY, INC. NORWOOD, MASSACHUSETTS
PRINTED IN U.S.A.

[redacted]

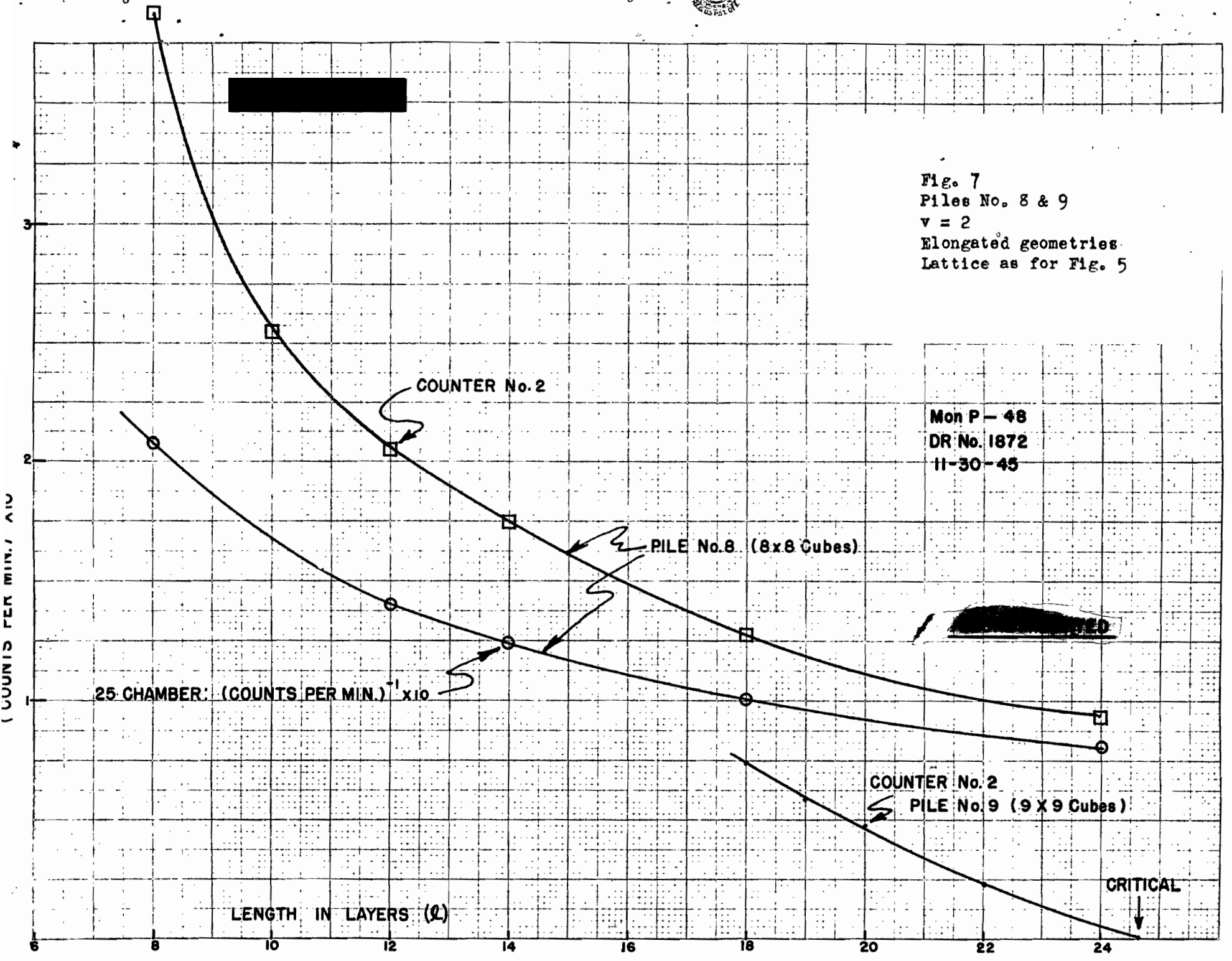

Fig. 7
Piles No. 8 & 9
v = 2
Elongated geometries
Lattice as for Fig. 5

Mon P – 48
DR No. 1872
11-30-45

[redacted]

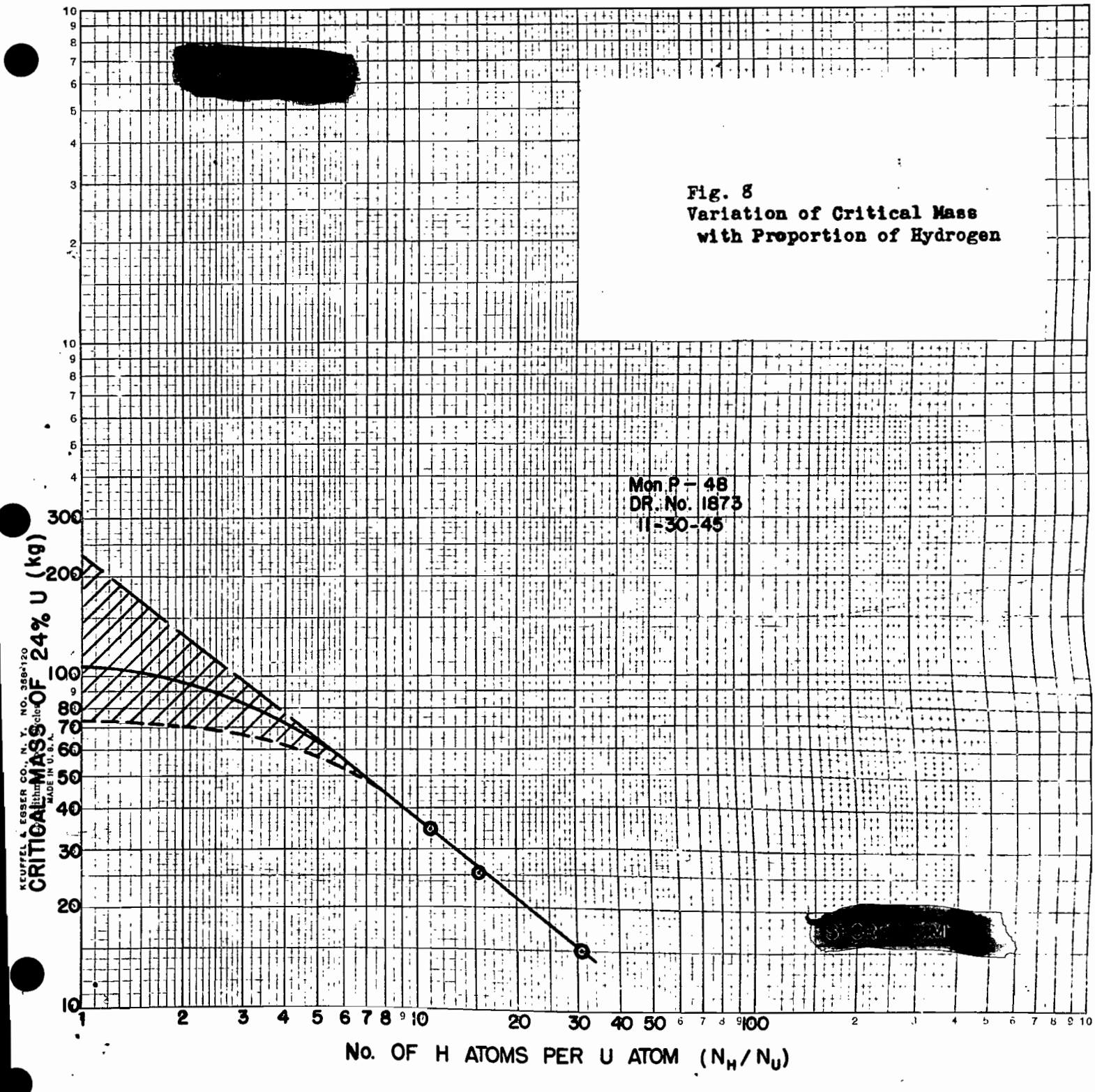

[redacted]

[redacted]

Fig. 8
Variation of Critical Mass with Proportion of Hydrogen