R.S.

CEW-TEC
TECHNICAL LIBRARY
DATE 12-20-46
B-479 FILE NO. 7124
RECORDED
P. O. REG.

Cover Page for UNCLASSIFIED Reports
MONSANTO CHEMICAL CO.
CLINTON LABORATORIES

REPORT NO. Mon C-174
This document contains 30 pages of Text and 1 pages of Figures.
This is copy 37 of 100
Series B.

Issued To: Col. G. J. Farney

THIS REPORT CONTAINS NO CLASSIFIED INFORMATION

| Read By | Date | Read By | Date |
|---|---|---|---|
| T. E. C. Library | | | |
| J. Dumpare | 12-30-46 | | |
| | | | |
| | | | |
| | | | |
| | | | |
| | | | |
| | | | |
| | | | |

Contract No. W-35-058 eng. 71

* * *

PROGRESS REPORT

* * *

# EXPERIMENTAL USE OF $C^{14}$: SYNTHESIS OF ACETIC ACID FROM RADIOACTIVE CARBON DIOXIDE

PROBLEM ASSIGNMENT NO. CX4-4

October 1, 1946

| | |
|---|---|
| Period: | March 1 to September 1, 1946 |
| Previous Reports: | Mon C-173 |
| Notebook: | CL-1206 |
| Experimental Work by: | L. B. Spector |
| Report Prepared by: | L. B. Spector |
| General Supervision: | G. E. Boyd and W. G. Brown |

Series A Received: 10/25/46
Series B Received: 12/16/46

Series A Issued: 10/28/46
Series B Issued: 12/16/46

## TABLE OF CONTENTS


| | Page |
|---|---|
| INTRODUCTION | 4 |
| SYNTHESIS OF ACETIC ACID FROM RADIOACTIVE CARBON DIOXIDE | 6 |
| 1. Preparation of Grignard Reagent | 6 |
| 2. Carbonation of the Grignard Reagent | 6 |
| 3. Distillation of Dilute Acetic Acid | 8 |
| 4. Evaporation to Sodium Acetate | 8 |
| 5. Acidification of Sodium Acetate and Distillation | 10 |
| 6. Ether Extraction and Final Distillation of Acetic Acid | 10 |
| NOTES | 13 |
| APPENDIX: EXPERIMENTS ON THE PREPARATION OF ACETYL CHLORIDE | 20 |

## ILLUSTRATIONS


| | | Page |
|---|---|---|
| Figure 1. | Carbonation Apparatus. . . . . | 7 |
| Figure 2. | Apparatus for Liberation of Dilute Acetic Acid Solution. . . | 9 |
| Figure 3. | Extraction of Acetic Acid from Saturated Sodium Chloride Solution . . . . . | 11 |
| Figure 4. | Final Distillation of Concentrated Acetic Acid Solution. . . | 12 |

## INTRODUCTION

For some time work has been in progress[1] in this laboratory on the synthesis of simple organic substances containing radioactive carbon ($C^{14}$) in specified positions in the molecule. The first such substance desired was acetic acid with the radio-carbon atom placed in the carboxyl group. Since the preparation of acids from Grignard reagents and carbon dioxide is a standard synthetic operation giving consistently good yields, serious consideration has been given to its possibilities from the beginning. However, the conventional procedure, in which an excess of carbon dioxide is employed, requires modification for the present purposes because of the necessity of conserving carbon dioxide and the problem of obtaining the best yield of acid. The yield is based on the carbon dioxide consumed rather than on the Grignard reagent.

The reactions which may occur when a Grignard reagent is treated with carbon dioxide may be represented as follows:

(1) $RMgI + CO_2 \longrightarrow RCO_2MgI$

(2) $RMgI + RCO_2MgI \longrightarrow R\text{-}CO\text{-}R + MgO \cdot MgI_2$

(3) $RMgI + RCOR \longrightarrow R_3COMgI$

Reactions (2) and (3), leading to the formation of ketone and tertiary alcohol, are normally minimized by working with a very large excess of carbon dioxide (usually in the form of solid $CO_2$) and also by maintaining a very low temperature during the reaction.

It may be expected therefore that if the proportion of reactants is reversed, the Grignard reagent being in excess, the formation of ketones and alcohols by the side-reactions (2) and (3) will be enhanced. To what extent this occurs is going to depend upon the time-factor, that is, the time elapsing before the mixture is subjected to hydrolysis, and perhaps also on the nature of the radical R. The results of the present work indicate that a substantial improvement in yield can be achieved by conducting the carbonation and hydrolysis as rapidly as possible.

The special case of acetic acid also presents some difficulties in isolation and purification, particularly with respect to separating it from water on a small scale. In the present work use is made of azeotropic distillation with benzene.

A previous report of the preparation of acetic acid from radioactive carbon

---

(1) See: Clinton Laboratory Chemistry Division Monthly Reports beginning July 15, 1945 to the present date. Mon N-6, 15, 26, 31, 45, 57, 72, 84, 103, 111, 131, 150, 161.

dioxide has been given by Ruben, Allen and Nahinsky,[2] but the scale employed was small, and the experimental details incomplete. So that a method may be made available for others, there follows a detailed procedure for the preparation of acetic acid at a one-tenth mole level.

Preliminary experiments on the preparation of acetyl chloride are described in the Appendix.

---

[2] Ruben, Allen and Nahinsky, J. Am. Chem. Soc., 64, 3050 (1942)

## SYNTHESIS OF ACETIC ACID FROM RADIOACTIVE CARBON DIOXIDE

### Preparation of Grignard Reagent

Nine gm. (0.37 gm-atom) of magnesium (Note 1) is placed in a one-liter, three-necked ground-glass reaction flask fitted with a dropping funnel (Note 2) closed with a drying tube (Note 3) and a second drying tube in another opening while the third outlet is closed with a glass stopper. A soft flame is played over the flask and funnel and, after cooling to room temperature, the drying tube closing the flask is replaced by a long spiral condenser (Note 4) surmounted by a drying tube. The magnesium is covered with 50 ml. of ether (Note 5) and 25 ml. (0.4 mole) of methyl iodide (Note 6) dissolved in 200 ml. of ether, is placed in the dropping funnel. After adding 10-20 ml. of methyl iodide solution to the magnesium, the reaction is started by gently warming with a small flame.

When the addition of halide is complete (Note 7), the solution is refluxed while the rest of one liter of ether is slowly dropped in (Note 8). This usually causes the appearance of a grey suspension of Grignard reagent which settles rapidly on standing. The entire mixture is poured through a glass funnel into the clean, dry two-liter flask (Figure 1) to be used in the carbonation (Note 9).

### Carbonation of the Grignard Reagent

This operation is performed in the apparatus shown in Figure 1. (Note 10, 11)

36.5 gm. (0.185 mole) of barium carbonate (Note 12) is placed in A and 150 ml. of hydrochloric acid (2 volumes of acid to 1 volume of water) in the dropping funnel. With B immersed in an ice bath, stopcocks 1, 2 and 3 are opened and the system is evacuated until the manometer reads its full length, at which time stopcock 1 is closed. The evacuation is continued until the ether in B starts to boil, when 2 and 3 are closed and the connection to the pump is broken in order to facilitate shaking of B. Two individuals are now necessary to complete the operation: one to shake the Grignard mixture while the other controls the liberation of carbon dioxide from the barium carbonate (Note 13).

By very slow addition of hydrochloric acid, enough carbon dioxide is generated to lower the mercury in the left-hand column of the manometer to the point where the levels in the two arms are almost but not quite equal (Note 14). Stopcock 1 is opened, then 2, and the flask B is removed from the cooling bath and shaken vigorously in a longitudinal direction. The rapid absorption of carbon dioxide by the Grignard reagent causes the mercury in the left-hand column of the manometer to rise again. From now on, the hydrochloric acid is added at such a rate that the pressure in A is kept somewhat below atmospheric. Toward the end, the hydrochloric acid is added in short, quick charges in order to stir up any unreacted barium carbonate on the bottom of the flask, and, if

Figure 1

Carbonation Apparatus

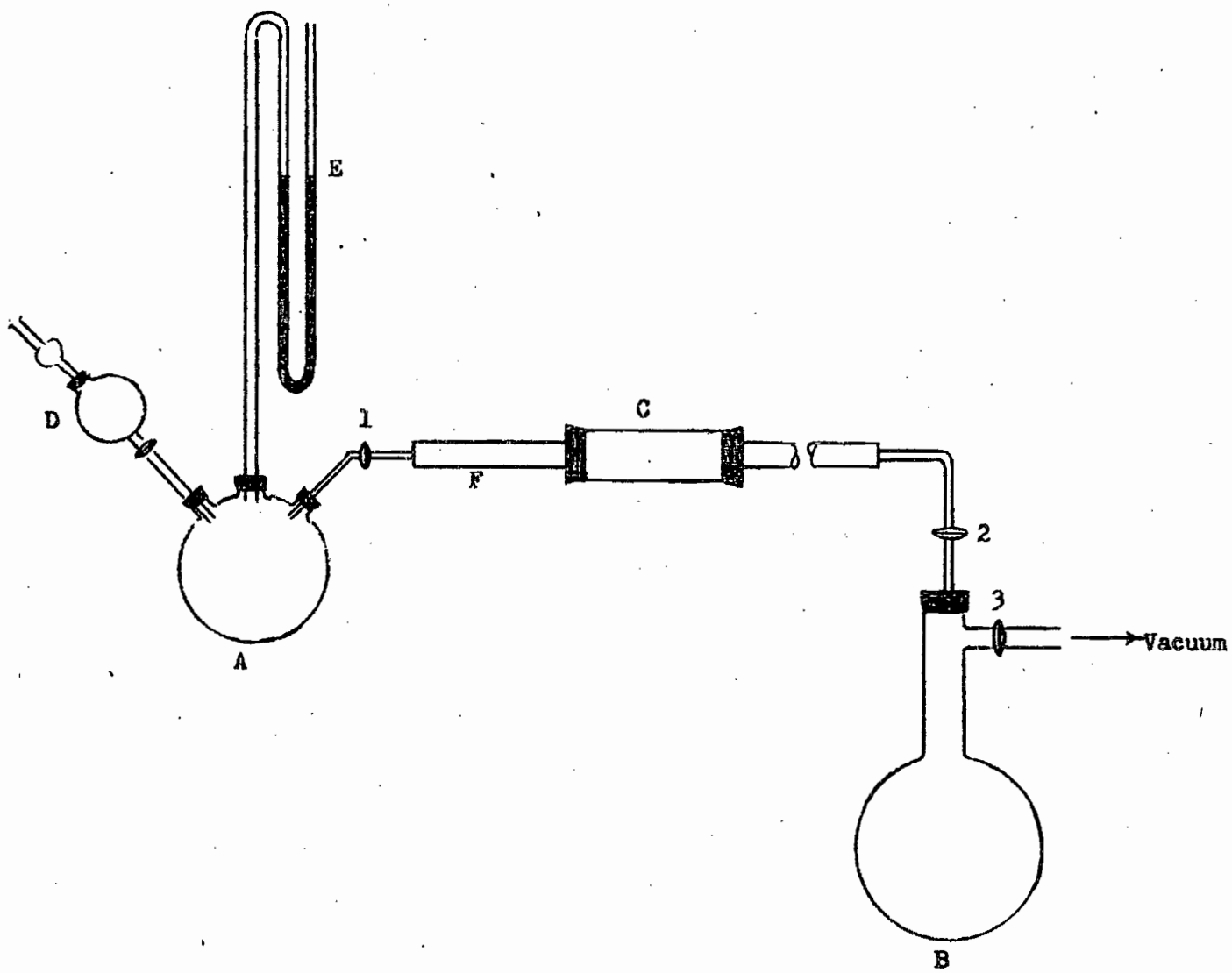


A. 500-ml. 3-necked flask

B. 2-liter long-necked flask with stopcock near mouth

C. Drying tube, 3 cm. x 20 cm., containing magnesium perchlorate

D. 250-ml. dropping funnel closed by an ascarite tube

E. Manometer, 55 cm. from bend to bend

F. Pressure tubing, wired on at all joints to glass tubing

Rubber stoppers are used throughout

necessary, B is cooled momentarily to lower the pressure of ether vapor. When only a ml. or two of acid remains to be added, preparations are made to sweep out the apparatus with air by cooling B until the mercury level in the left-hand column reaches a maximum (in ten to fifteen seconds) and then closing 2. The funnel stopcock is opened and closed when the mercury levels are nearly equalized. Thereupon, 2 is opened and B shaken. This sweeping out process can be repeated once or twice more or until the pressure difference within and without the system becomes small.

To decompose the Grignard complex, the rubber stopper in B is removed and the contents rapidly poured on to one-liter of vigorously stirred crushed ice in a four-liter beaker (Note 15). By means of a funnel, a cooled solution of 25 ml. of concentrated sulfuric acid in 200 ml. of water (Note 16) is added beneath the ether layer to dissolve the magnesium salts. A stream of air is then directed into the open beaker and the ether blown off (Note 17). The entire operation of carbonation and hydrolysis (exclusive of final acidification) should consume no more than five or six minutes.

## Distillation of Dilute Acetic Acid

The contents of the beaker are transferred to a two-liter, three-necked flask and the solution treated with 100 gm. (a 33% excess) of solid silver sulfate (Note 18). The flask is connected to the distillation assembly shown in Figure 2.

Fifty ml. of concentrated sulfuric acid, dissolved in 250 ml. of water, is added to the flask and dissolved ether is removed at the water pump at room temperature (Note 19). When all the ether is removed, heat is applied (burner) and distillation of a very dilute solution of acetic acid (Note 20) occurs at 100-110 mm. (Note 21) at the rate of 90-100 ml. per hour. When nearly all the solution in the flask has been distilled (Note 22) and a paste of silver sulfate, silver iodide and sulfuric acid remain, the distillation is interrupted to add 50-100 ml. of water, in order to loosen the solid, and the distillation is resumed. This procedure is repeated until all the acetic acid is distilled (Note 23). For yield see Note 40.

## Evaporation to Sodium Acetate

The apparatus is the same as that shown in Figure 2 except that a 300 ml., three-necked flask serves as the distilling vessel and is equipped with a one-liter dropping funnel and a capillary air inlet in the center opening, both connected by rubber stoppers. As source of heat, a glass heating mantle works nicely. A three molar excess (Note 24) of sodium hydroxide pellets (19.5 gm.) is dissolved in 150 ml. of water and distributed as follows: 50 ml. into the 300 ml. flask in which evaporation to sodium acetate is to occur, and the rest is distributed proportionally between the containers of the distillate obtained in the previous step. The flask is filled three-quarters full (Note 25) of solution and distillation proceeds at 30-40 mm. (Note 26) until a thick paste of sodium acetate, excess sodium hydroxide and water remains (Note 27).

Figure 2

Apparatus for Liberation of Dilute Acetic Acid Solution

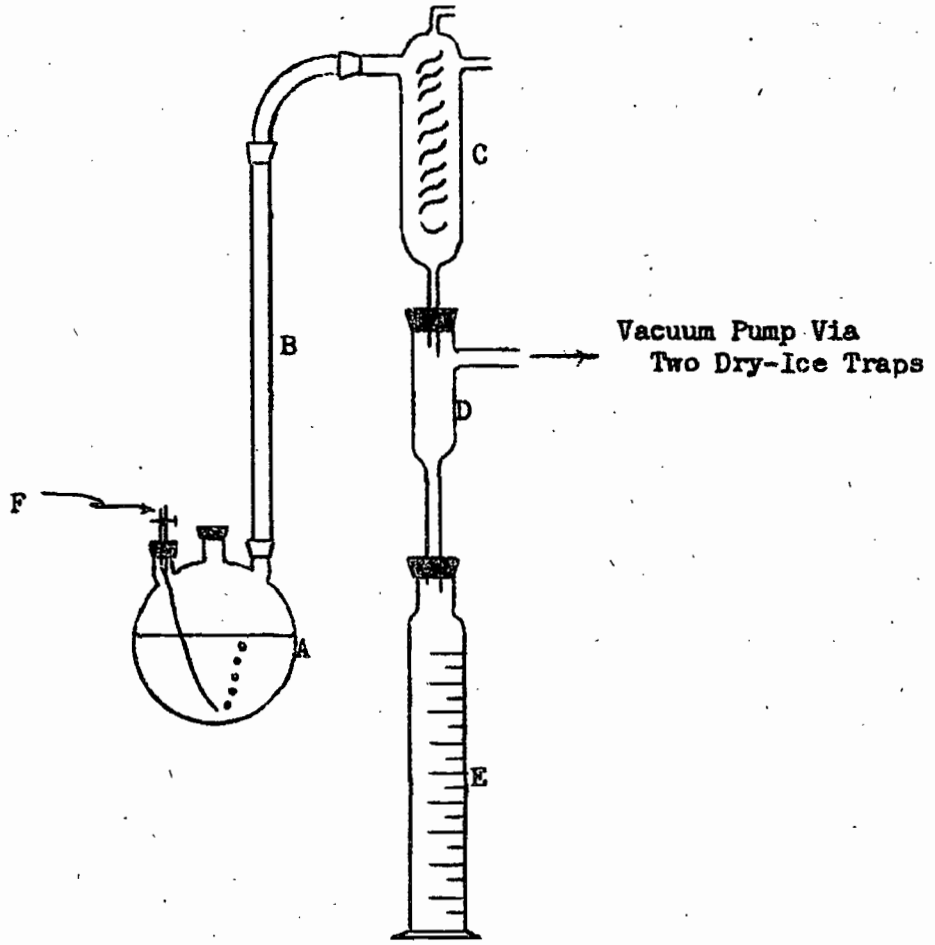


A. 2-liter, 3-necked flask with rubber stopper in central opening

B. 1-foot glass column filled with ¼" single turn glass helices and connected at both ends by ground glass joints

C. Friedrich condenser

D. Adapter

E. 1-liter graduated cylinder connected by rubber stopper

F. Capillary air inlet held by rubber stopper

## Acidification of Sodium Acetate and Distillation

The apparatus remains unchanged except that a smaller receiver is used for the distillate. With the distilling flask surrounded by a bath at 0° to 10° C, a solution of 15 ml. of concentrated sulfuric acid (a one ml. excess over that required to neutralize the sodium hydroxide and sodium acetate) in an equal volume of water is gradually added to the flask through the capillary air inlet by the application of gentle, intermittent suction at the water pump (Note 28). The water pump is replaced by an oil pump, and a more concentrated solution of acetic acid is distilled at 100-130 mm. until the residue in the flask becomes pasty. After cooling (Note 29), the center opening of the flask is opened and the walls washed down with the minimum amount of water sprayed from a wash bottle. Distillation is resumed and the washing down process is repeated until analysis shows no further increase of acetic acid in the distillate (Note 30). For yield see Note 40.

## Ether Extraction and Final Distillation of Acetic Acid

For the ether extraction, an extractor of suitable capacity (Note 31) is equipped with a 200 ml. round bottom flask and connected to an efficient spiral condenser (Note 32). A fritted glass filter plate (medium pore size) with stem (Note 33) is placed inside the extractor as shown in Figure 3.

The acetic acid solution from the previous step is saturated with solid sodium chloride and added to the extractor to which 1-2 gm. of solid sodium chloride is also added beforehand (Note 34). 100 ml. of ether (Note 35) is placed in the distilling flask and heating commenced. After about ten minutes, small bubbles of ether issue from the filter plate in a steady stream and the extraction is continued for 24 hours (Note 36). At the end of this time, heating is discontinued and the apparatus is tilted in order to transfer the ether layer in the extractor column over into the 200 ml. flask. By means of a large transfer pipet operated by a syringe control, the ether solution of acetic acid is carefully transferred to the distilling apparatus shown in Figure 4.

The beaker is filled with ice water and, to further diminish the vapor pressure of the distillate, the receiver (Note 37) is also cooled in ice water. The air outlet is protected by a drying tube.

With a boiling stick or a piece of porous plate in the flask, distillation proceeds smoothly and when the temperature reaches 55°-60°C. the receivers are quickly changed (Note 38). Distillate distilling above 60°C. is collected as acetic acid solution (Note 39). Based on the barium carbonate used, this procedure gives yields amounting to 70-77 per cent of the theoretical (Note 40).

Figure 3

Extraction of Acetic Acid from Saturated Sodium Chloride Solution

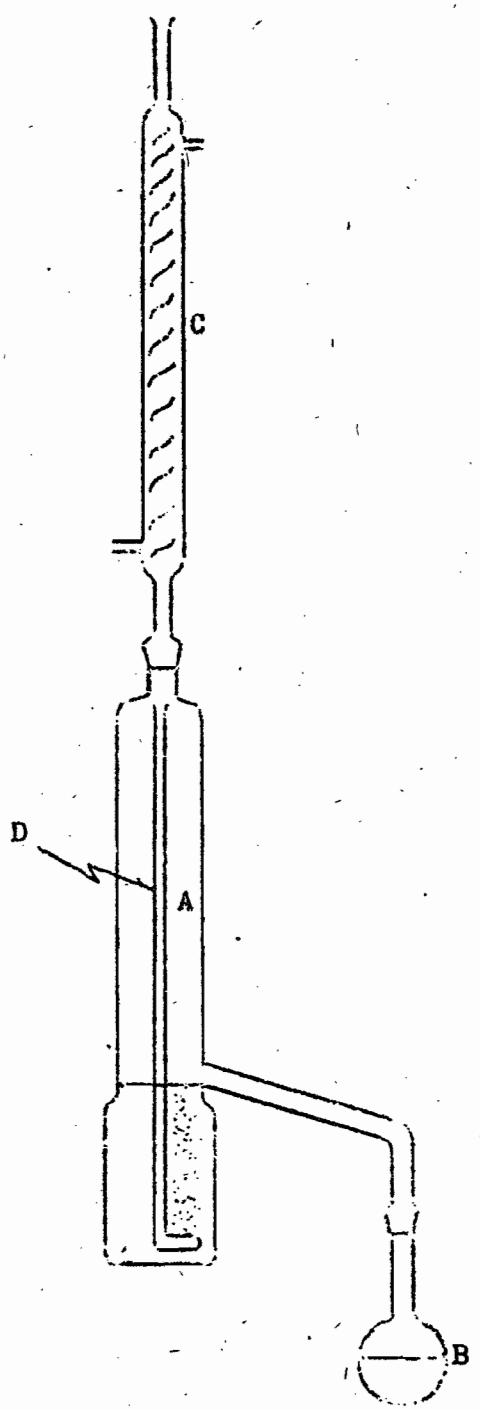


A. Extractor, 18" long, 4 cm. diameter at top, 4.5 cm. at bottom

B. 200-ml. flask

C. Spiral reflux condenser

D. Filter plate stem, 16" long

Figure 4

Final Distillation of Concentrated Acetic Acid Solution

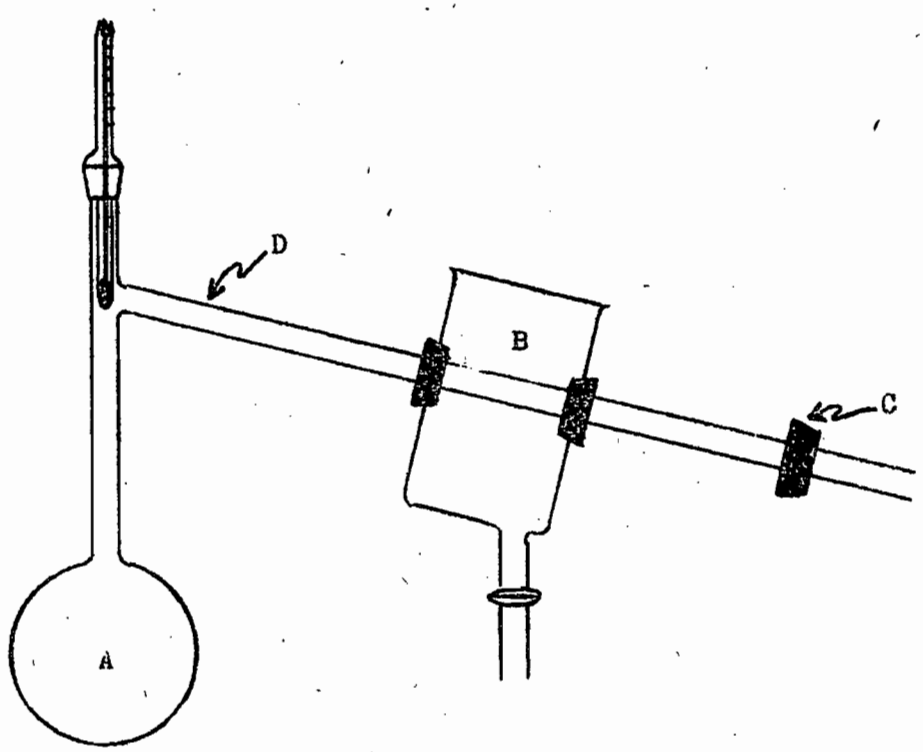


A. 125-ml. distilling flask

B. 250-ml. beaker held by rubber stoppers and filled with ice water

C. Rubber stopper to hold receiver, has second hole for air outlet

D. 8 mm. glass tubing, 20 cm. long

## Notes

1. This quantity of magnesium represents a two-fold molar excess over the quantity of carbon dioxide to be used in the carbonation step. Experiments designed to test, among other things, the effect on yield of varying the Grignard reagent/carbon dioxide ratio (see Table I) have demonstrated no difference between a four-fold and a two-fold excess of reagent.

Table I

Carbonation of Grignard Reagent

| Grignard reagent/$CO_2$ | Duration of carbonation + hydrolysis (min.) | Concentration of Grignard (M) | Temperature of bath during carbonation (°C) | % yield of acetic acid |
|---|---|---|---|---|
| 5 | 25-30 | 1.8 | -40 to -30 | 60 |
| 5 | ~20 | 0.9 | 0 - 25 | 80 |
| 4 | 6 | 0.7 | 0 - 25 | 85 |
| 2 | 5 | 0.35 | 0 - 25 | 87 |
| *2 | 5 | 0.35 | 0 - 25 | 87.5 |

*Run made with radioactive carbon dioxide

The use of less than 100% excess of Grignard reagent was not attempted but would appear to be worthy of trial. In assessing the effect on yield of various Grignard reagent/carbon dioxide ratios, account must also be taken of (1) concentration of reagent, (2) time necessary to consummate carbonation and hydrolysis, and (3) temperature during carbonation. The influence of these other factors have not been evaluated individually but the evidence at hand indicates higher yields are found with shortened reaction time and lower Grignard reagent concentration.

2. The funnel is of 500 ml. capacity and is of the type bearing a connecting tube which equalizes the pressure over the liquid in the funnel with that in the reaction flask.

3. The drying tubes in these experiments may be filled with calcium chloride or any suitable desiccant.

4. The condenser is previously dried with a stream of warm air.

5. Merck "Anhydrous" ether, dried over sodium, was used.

6. Eastman Kodak product used directly without further purification.

7. If any large pieces of magnesium remain undissolved small increments of methyl iodide are added to complete the reaction.

8. The alternative procedure is to pour the Grignard solution into the carbonation vessel before adding the rest of the ether. Small particles of undissolved magnesium can be removed by filtration through loose glass wool.

9. When the Grignard solution is not to be used immediately, the flask is closed with the wired-on rubber stopper bearing stopcock 2 of Figure 1, and allowed to stand overnight at room temperature.

10. The stopcock 3 can also be inserted anywhere in the line between 1 and 2.

11. How much, if any, carbon dioxide is adsorbed in the drying tube is unknown.

12. Barium carbonate was freshly prepared by the reaction of potassium carbonate with barium nitrate. The precipitate was washed three times by decantation and then again thoroughly on the Büchner funnel, followed by overnight drying at 110° C. Barium carbonate prepared in this way evolved at least 99.3 per cent of the theoretical quantity of carbon dioxide. When making a radioactive run, the active barium carbonate is mixed with the desired amount of carrier.

13. If a suitable shaking machine is available the carbonation can be carried out by one person. However, the rapid transfer of flask B from the machine to the cooling bath and back again in the later stages of the operation may be awkward and certainly time-consuming.

14. To minimize loss of carbon dioxide by leakage, the carbonation is performed at sub-atmospheric pressure. In the course of adding the hydrochloric acid, the pressure in flask A will occasionably rise above atmospheric, but vigorous shaking of flask B rapidly rectifies this condition.

15. It was found advantageous to pour the Grignard mixture into ice - not into ice and acid. The former procedure generates less heat, is cleaner, permits much faster pouring of the ether mixture and avoids foaming of the ether.

16. Sulfuric acid is used because its lower volatility precludes complications in the subsequent distillation step. The use of undiluted acid usually liberates free iodine, which distills in the next step if its precipitation by silver sulfate is incomplete.

17. From the standpoint of safety it would probably be better to remove the ether (and possibly any radioactivity) in a distillation apparatus.

18. Silver sulfate precipitates the iodide present as silver iodide and prevents hydrogen iodide from distilling over with the acetic acid. The salt is prepared from silver nitrate and sulfuric acid, followed by thorough washing by decantation and overnight drying at 110°C.

19. Removal of ether must be done very carefully to prevent the solution from foaming up into the fractionating column and over into the receiver. Very nice

control of the applied vacuum is obtained by placing one finger over the air inlet into the safety flask which immediately precedes the water aspirator in the vacuum assembly. By judicious raising or lowering of the finger the ether can be boiled out of the solution without mishap.

20. The silver iodide slurry shows a strong tendency to bump. Both the flask and the column should be securely clamped to some rigid support in order to prevent loosening of the apparatus. It was observed that bumping was most vigorous at the start of the operation but bumping-over accidents have happened even after as much as half of the solution was distilled over.

21. After removal of the ether, change-over to an oil pump is advisable because it is not subject to the fluctuations of the water pump. With the aid of a manostat the distillation can be performed at any constant pressure in the range 75 to 130 mm. If the pressure is too low the condenser may be unable to handle the vapor flow and some product may have to be recovered from the dry-ice trap where it may become contaminated with iodine (see Note 22). When the pressure is too great distillation is slow.

22. Heating should be discontinued before the sulfuric acid becomes so concentrated that it distills. Although sulfuric acid in the distillate can do no harm it makes analysis and calculation of the yield of acetic acid impossible by the simple titration technique used here. A further deterrent to prolonged heating is the partial decomposition of the solid to yield free iodine which, in small amounts, is condensed in the dry-ice trap but in large amounts, may dissolve to some extent in the distillate.

23. The progress of the distillation is followed by alkalimetric titration. A 25 to 100 microliter aliquot, dissolved in water and treated with 10 microliters of phenolphthalein solution, is titrated on a small spot plate with 0.02 - 0.03 N sodium hydroxide solution drawn from a one-ml. burette. A blank correction is made.

24. To minimize hydrolysis of sodium acetate during the distillation an excess of sodium hydroxide is used. No experiments were performed, however, to determine if a smaller amount of alkali would do as well. In the following operation of acidification and distillation, a smaller residue of sodium sulfate in the distilling flask would probably facilitate recovery of acetic acid.

25. It was observed that distillation proceeded more rapidly when the distilling flask was kept at least three-quarters full of liquid. Here, too, careful attention is demanded if bumping accidents are to be prevented.

26. Distillation was performed at this low pressure in order to minimize hydrolysis of sodium acetate due to excessive boiling temperatures. Under these conditions, the distilling flask was barely warm to the hand, but got hotter toward the end of the operation as the alkali concentration increased. The increase in boiling temperature was thus compensated by an increase in alkali concentration.

27. The distillate thus obtained was neutral and is presumed to contain the residue of carbon (probably as tertiary butyl alcohol) which failed to appear as acetic acid in the carbonation step.

28. Since heat and vapors (water and acetic acid) are generated in the acidification it is recommended that the flask be stoppered during the addition of the acid. This can be done very neatly by adding the acid through the capillary inlet using the suction technique described in Note 19.

29. In a dead run a strong odor of acetic acid was perceptible when the distilling flask was opened, even after cooling to room temperature. Therefore, in making a radioactive run, the use of a gas mask is very strongly indicated at this point. Starting here and throughout the remainder of the procedure, it was the author's policy to wear the gas mask whenever a vessel containing radioactive acetic acid was open to the atmosphere. During the carbonation step, the same precaution was taken against the possibility of breakage, since shaking of the Grignard mixture was done largely outside the hood. High velocity hoods were used throughout this work.

30. For the success of the subsequent ether extraction it is important to keep at a minimum the water concentration of the acetic acid, since ether extracts water as well as the acid. This entails a compromise between total yield and concentration of the product acid. Experiment demonstrates, for example in the case of the radioactive run made by the author, that 80.1 per cent of the theoretical yield of acid was found in the first 89 ml. of distillate while the distillation of 45 additional ml. realized an increase of only 2.3 per cent in yield. In the interest of increased purity (with respect to water) of the final product it is recommended that such residues be left for separate recovery or re-cycled in later runs.

31. For production work a set of extractors of varying capacity is desirable so that any volume of distillate can be handled.

32. If an inefficient condenser is used, or if the condenser water is too warm, the ether may evaporate and bring the extraction process to a standstill. When this occurs the operation can be resumed by simply adding ether through the top of the condenser and continuing the heating.

33. The minimum length of stem necessary to insure a sufficient head of ether depends on (1) the height of the water layer and (2) the cleanliness of the filter plate surface. Cleaning with concentrated sodium hydroxide followed by thorough rinsing with water (but not acid) was found to give a surface from which small bubbles of ether rose in quantity. For a 5.5 inch aqueous layer a sixteen inch stem was sufficient.

34. Since no experiments were performed with other salting-out agents, there is no reason to believe that other substances would not function as well as, or better than, sodium chloride. A substance permitting more rapid extraction of the acid would probably inhibit the concomitant extraction of water, leading to a purer product.

35. This ether is cleansed of alcohol as well as water. See Fieser, Experiments in Organic Chemistry, second edition, p. 360-1, D. C. Heath & Co., Boston, 1941.

36. In a dead run extraction for twenty-six hours of a solution of 10 gm. of acetic acid in 70 ml. of salt solution, a 98.5 per cent recovery was obtained. In a ten-hour run a 95 per cent recovery is possible. Here again one must strike a compromise between yield and purity in deciding how long to continue an extraction. Prolonged extraction, while improving the recovery of acid, increases the water concentration of the final product. The available evidence on these points is collected in Table II.

Table II

Ether Extraction of Acetic Acid from Saturated Sodium Chloride Solution

| Gm. of Acetic Acid | Volume of salt sol'n. of acid (ml.) | Duration of Extraction (hrs.) | % Recovery of Acid | Purity (% by volume) |
|---|---|---|---|---|
| 9.6 | ~ 70 | 10 | 94-97, | ---- |
| 10.5 | ~ 70 | 10 | 94 | ---- |
| 10.4 | ~ 70 | 26 | 98.5 | 86 |
| *9.0 | ~170 | 24 | 90 | 78.5 |

*Radioactive run

37. For convenience in measurement a graduated ten-ml. cylinder with a 19/38 ground glass joint was used as receiver.

38. In a dead run the first perceptible odor of acetic acid was noticed when the vapor temperature was 60-70°C, and it was decided to collect everything above 60°C as acetic acid solution. In the radioactive run ninety per cent of the distillate boiled above 105°C and about fifty per cent of the total distilled between 116° and 120°C (b.p. of acetic acid, 118.2°C).

39. The final product consists of a water solution of acetic acid with possibly a trace of ether. After analysis, an anhydrous product is obtained by adding the calculated weight of anhydrous benzene and removing the water by azeotropic distillation. Benzene and water form a heterogeneous C.B.M. containing 8.9 per cent by weight of water and boiling at 69.3°C. Benzene also forms a C.B.M. with acetic acid containing two per cent by weight of the latter and boiling at 80.05°C, while benzene itself boils at 80.1°C. Therefore, to prevent loss of product, precisely the weight of benzene must be used which will remove only the water. In a dead run distillation of a 92 per cent (by weight) solution of acetic acid through a five inch column of 1/8 inch single-turn glass helices with the calculated weight of anhydrous benzene, a 92.5 per cent recovery of acetic acid of 97 per cent purity was accomplished. The impurity is undoubtedly benzene.

40. In the radioactive run made by the author a final overall yield of seventy per cent was obtained. Broken down stepwise, the following picture of the overall process emerges:

Table III

Stepwise Tabulation of Yields

| Operation | Per cent yield calc'd. on material submitted to each operation | Per cent loss of total theoretical yield |
|---|---|---|
| Carbonation and Distillation | 87.5 | 12.5 |
| Acidification of Na acetate and Dist'n. | 93 | 6.5 |
| *Ether Extraction | 90 | 8 |
| Final Dist'n. of Acetic Acid Solution | 96 | 3 |
| Overall | 70 | 30 |

*Calculated from the amount of acetic acid which remained unextracted in the aqueous phase.

It is seen that ether extraction from a large amount of water solution (~170 ml.) in only twenty-four hours entails an eight per cent loss in total yield. As shown in Table II(Note 36), extraction from ~70 ml. of salt solution for the same length of time permits recoveries of 98.5 per cent. On this basis, and accepting the efficiencies of the other steps as shown above, a maximum yield of 77 per cent of the theoretical is attainable by the procedure described. All residues are in a recoverable or re-cycleable form.

The properties of the radioactive acetic acid prepared by the author are:

| | |
|---|---|
| Weight of Solution | 9.35 gm. |
| Weight of Acetic Acid present | 7.78 gm. |
| Volume of Solution | 9.6 ml. |
| Per cent Purity, by volume | 78.5 % |
| Per cent Purity, by weight | 83.1 % |

A 1.026 microliter aliquot of the solution requires 0.570 ml. of 0.0242 N sodium hydroxide.

The specific activity of the solution has not been measured. 248 microcuries of radioactive carbon (on basis of revised half-life) were submitted to carbonation. Assuming that the radiochemical yield parallels the chemical yield, the acetic acid solution contains 174 microcuries of carbon.

The original description of the preparation of radioactive acetic acid may be found in CL-1206, pp. 81-91.

# APPENDIX

## Experiments on the Preparation of Acetyl Chloride

Since acetyl chloride is an important intermediate in the synthesis of numerous substances, notably ethyl alcohol, some effort has been directed toward establishing the experimental conditions for its facile preparation in good yield before attempting a radioactive run. Following the directions of Clark and Bell[1], 10 gm. of acetic acid was reacted with phosphorous trichloride and zinc chloride in the molar ratio of 1:0.6:0.2. Decantation of the supernatant layer followed by distillation afforded 11.44 gm. (87.5 per cent of the theoretical yield) of material boiling at 49-51°C. This procedure has not yet been tried on a smaller scale.

Six experiments on the displacement of the equilibrium between acetic acid and an excess of benzoyl chloride have also been performed, following the general procedure of H. C. Brown[2] and with results in substantial accord with those published. On a three gm. scale, acetic acid (or an 83 per cent solution in water) was warmed with 60 ml. of distilled benzoyl chloride in a distilling flask and the emergent vapors collected in a receiver immersed in a dry ice acetone bath. It was observed that a very volatile liquid collected along with the acetyl chloride. After spontaneous evaporation of the volatile material a yield of 82-86 per cent of crude acetyl chloride remained. Collected separately, the volatile substance boiled (with porous chip) over a wide range. Vigorous ebullition commenced at -60 to -50°C and continued with diminishing vigor up to about -10 to 0°C when very small bubbles continued to issue in a rapid stream from the boiling chip. At the present time the identity of this material is unknown.

For the original description of this work see CL-1206, pp. 16-17 and pp. 92-107.

---

(1) Clark and Bell, Trans. Roy. Soc. Canada, (3) 27, III, 97-104 (1933)

(2) H. C. Brown, J. Am. Chem. Soc., 60, 1325 (1938)

DEC 1946
Clinton Laboratories
Central File
Room