OAK RIDGE NATIONAL LABORATORY LIBRARIES

3 4456 0571488 5

CENTRAL RESEARCH LIBRARY
DOCUMENT COLLECTION

[redacted]

Chemistry-Separations Processes
for Uranium
REPORT NO: MonT - 320 ay ~~[illegible]~~ 2A

DECLASSIFIED

CLASSIFICATION CHANGED TO:
BY AUTHORITY OF: Tide 1160
BY: [illegible] 3-24-58

Contract No. W-35-eng-71

POWER PILE DIVISION

Preliminary Report on the Recovery of Uranium From Spent Graphite-Uranium Fuel Material

H. K. Jackson

CENTRAL RESEARCH LIBRARY
DOCUMENT COLLECTION
LIBRARY LOAN COPY
DO NOT TRANSFER TO ANOTHER PERSON
If you wish someone else to see this document, send in name with document and the library will arrange a loan.

Series A Received: 6/26/47 Series A Issued: 6/26/47

[redacted]

[redacted]

[redacted]

TABLE OF CONTENTS

		Page
I.	ABSTRACT	3
II.	SCOPE	3
III.	SUMMARY	4
IV.	INTRODUCTION	5
V.	LITERATURE REVIEW	6
	A. General	6
	B. Recovery by fusion of graphite with sodium carbonate	7
	C. Recovery by leaching of graphite with nitric acid	9
	D. Recovery by burning of graphite and subsequent leaching with nitric acid	10
	1. General	10
	2. Experiments at University of California	11
	3. Experiments at Purdue University	12
	4. Experiments on leaching of incompletely burned carbon ash	12
	5. Large scale processing at Y-12	13
	E. Miscellaneous methods of recovery	16
	1. General	16
	2. Recovery by chlorination	16
	3. Recovery by continuous fusion of ash residues with $NaHSO_4$	17
	4. Recovery by $K_2S_2O_7$ fusion and H_2SO_4-HF leach	17
	5. Recovery by fusion with $K_2S_2O_7$-KHF mixture	18
	6. Recovery by use of elemental fluorine	18
	7. Recovery by leaching of graphite with nitric and hydrofluoric acids	18
	8. Recovery by $K_2S_2O_7$, Na_2O_2 and Na_2CO_3 fusion and H_2SO_4 - H_2O_2 leaching	19
	F. Effect of metallic catalysts on burning rate of graphite	19
	G. Crushing and grinding of graphite	19
	H. Solubility of fission products and graphite ash	19
VI.	REQUIRED CAPACITY OF RECOVERY EQUIPMENT	21
VII.	GRAPHITE SPECIFICATIONS	22
VIII.	SELECTION OF A RECOVERY PROCESS ON THE BASIS OF PRESENT DATA	23
IX.	PROPOSED EXPERIMENTAL PROGRAM	25
X.	BIBLIOGRAPHY	28

This d[redacted]al
de[redacted]
Espionage [redacted]
or th[redacted]
u[redacted] LAW.

[redacted]

[redacted]

I. ABSTRACT

A survey of all available project information pertaining to the recovery of uranium from graphite is presented. A recovery process which appears to be feasible, on the basis of present data, is suggested. A proposal is made on the future course of action to be taken in developing a process for recovery of uranium from spent graphite fuel material to be used in the power pile.

II. SCOPE

This report deals only with that step in the recovery of uranium from spent graphite fuel material which is concerned with the recovery of uranium, together with the bulk of fission products which will accompany it, from the graphite; the process for separation of uranium from fission products is currently being developed by the Technical Division.

This document [redacted] onal
[redacted] he
espionage A[redacted] on
or [redacted]
unau[redacted]

[redacted]

III. SUMMARY

Section V of the Table of Contents lists processes which have been investigated for the recovery of uranium from carbon and graphite parts. No study on the recovery of uranium from carbon parts containing fission products has been reported.

The only process utilized on a large scale has been the operation at Y-12 in which carbon parts are burned in oxygen, the ash leached with hot nitric acid, and the residue fused with sodium hydroxide, and then leached with nitric acid. If complete combustion is obtained, the uranium content of the residue after the first nitric acid leach is of the order of 1,000 ppm, and the uranium content of the insoluble residue after leaching of the fusion product is of the order of 50-100 ppm. If we may extrapolate these recovery data to a power pile graphite fuel unit containing .04% ash and 2% uranium, the losses after the first and second leach would be of the order of .001% and 0.0001% respectively.

It has been demonstrated that a residue completely soluble in nitric acid can be obtained by mixing ground carbon parts containing uranium with five parts by weight of sodium carbonate, and heating to 750°C for 17 hours. The residue has a sodium/uranium atom ratio of about 1000 to 1, and nullifies one of the major advantages of the graphite fuel unit, i.e., the small amount of solution required for fission product separation compared to that necessary when the Be-U and $BeO-UO_2$ type fuel units are used.

[redacted]

III. SUMMARY (continued)

The other methods of recovery reported in the literature appear to be less attractive than the process outlined above, either because of incomplete recovery or excessive corrosion effects on materials of construction.

It is recommended that an experimental program be undertaken to determine the recovery which can be obtained by the burning-acid leach process, using a graphite containing fission products and .04% ash. If it is found that the recovery is sufficiently high, as can be expected, then recovery equipment should be designed, and the adequacy of the process and equipment demonstrated. An outline of a design which appears to be feasible on the basis of present data is given in Section VIII and Figures 2 and 3.

IV. INTRODUCTION

Current estimates indicate that the maximum allowable depletion of fissionable material in the graphite type fuel units will be of the order of 4-10%. When this depletion has been reached, the fuel units will be extracted from the pile and stored for about 4 months. This interval is necessary to permit the decay of U^{237} formed in the pile to such an extent that the uranium recovered can be handled by the fabricating personnel without necessity for using remote control equipment. On the basis of 4-10% depletion of the fuel units, the chemical processing loss would be determined by multiplying the processing loss <u>per pass</u> through the processing plant by a

[redacted]

IV. INTRODUCTION (continued)

factor of 9 to 24. It is evident that the loss of uranium during each pass through the chemical processing plant must be maintained at an extremely small value, and the permissible loss in any one step of a cycle must be maintained at perhaps 0.01% or less. Losses estimated in later sections will be based on a graphite fuel unit containing 2% uranium.

V. LITERATURE REVIEW

A. General

Project data pertaining to the recovery of uranium from graphite was found to be widely scattered and inadequately indexed; much of the more valuable information was obtained as a result of numerous conferences with personnel at Y-12 who are currently working on the problem, or who had worked on it previously. For these reasons this summary of the project literature on recovery of uranium from graphite is considered to be the major contribution of this memorandum.

Although there has been no project experience in the recovery of uranium from graphite which contained fission products, there was found a very considerable amount of experimental and plant operation data on the recovery of uranium from carbon parts used in the isotopic separation process at Y-12. A certain amount of the experimental data

V. LITERATURE REVIEW (Continued)

A. General (continued)

obtained in the development of the process used at Y-12 was obtained at Purdue Research Foundation.

For a satisfactory interpretation of this literature, it is necessary to note the current value of enriched uranium relative to its value at the time when the bulk of the experimental data were taken. In 1944 and 1945 every effort was made to reduce the enriched uranium content of any waste stream to a negative spectrographic test. It is currently believed that a uranium loss of perhaps 0.01% in any waste stream may be a practicable figure, with about 0.1% loss for an entire cycle through the fission product separation process. All methods found in the literature for the recovery of uranium from graphite are reported in this review, but it is believed that the applicability of some of the obviously complicated processes to the present problem is questionable in view of the fact that a satisfactory solution to the problem must be, for the present time at least, a simple and straight-forward process due to the presence of radioactive fission products.

B. Recovery by fusion of graphite with sodium carbonate.

Workers at the Purdue Research Foundation (6,7,8,9) demonstrated repeatedly that uranium could be completely recovered from carbon

V. LITERATURE REVIEW (Continued)

B. Recovery by fusion of graphite with sodium carbonate (continued)

parts by mixing one part of ground carbon (65-100 mesh) with 5 parts by weight of Na_2CO_3, and heating the mixture to about 750°C for 17 hours. Such a treatment burns away the carbon without dusting and leaves a residue which is completely soluble in nitric acid. This method was also used as an analytical procedure.

The use of less Na_2CO_3 or less than about 15 hours fusion time gave less than 100% recovery. Na_2O_2, NaOH, $CaCO_3$ and Eschka's mixture (2 parts MgO-1 part Na_2CO_3 by weight) were found to be less effective than Na_2CO_3. Some tendency for the Na_2CO_3-Carbon mixture to sinter was observed; apparently the sintering was not too serious, and simply decreased the burning rate without effecting the recovery of uranium. The addition of sodium silicate to the fusion mixture did not increase the rate of burning. Since sodium silicate is known to increase the rate of oxidation of carbon, it was believed that there were probably sufficient silicates in the binder of the carbon to act as a catalyst. The presence of silica is undesirable during subsequent extraction steps because of its tendency to stabilize emulsions. It was noted that an increase in rate of burning could be obtained by introducing air through a small nickel pipe placed in the mixture.

The high ratio of sodium to uranium (1100 to 1 on an atom basis) resulting from a sodium carbonate fusion of the graphite would lead to no particular difficulty in the subsequent solvent extraction

V. LITERATURE REVIEW (Continued)

B. Recovery by fusion of graphite with sodium carbonate (continued)

operations. Since sodium is a poor salting-out agent, an electrolyte such as aluminum must be added. A solution that is 1M $Al(NO_3)_3$, 4M $NaNO_3$ and .4MHNO_3 (practically a saturated solution) gives a uranium distribution coefficient with hexone of 10-20, and this is quite satisfactory. The uranium concentration in this extraction feed solution would be about .04M, which is of the same order as the uranium concentration in the feed solution from the hetergeneous pile fuel units. On a long range basis however, the dilution of uranium in the solvent extraction feed necessitated by the presence of a large quantity of sodium ion would be objectionable; the small volume of solvent extraction feed solution theoretically necessary for uranium, relative to the volumes required for Be-U and $BeO-UO_2$ fuel units, is one of the principal advantages of the graphite fuel unit (11).

C. Recovery by leaching of graphite with nitric acid

The Purdue Research Foundation (5,6,8,9) undertook the recovery of uranium from ground carbon parts by leaching with HNO_3. The procedure in general was to mix ground carbon parts (containing about 0.16% of U and .4% ash) with HNO_3 in a flask equipped with a water cooled condenser to reflux the acid. About 90% of the uranium was extracted after one hour, and about 95% was extracted after four hours. There was evidence that little or no increase in recovery could be obtained with increase in leaching time greater than four

V. LITERATURE REVIEW (Continued)

C. Recovery by leaching of graphite with nitric acid (continued)

hours, although no runs lasting more than a half a day or so were reported. 70% acid was found to be slightly more effective than 10% acid.

Rate of extraction of uranium from 10-50 mesh particles was at least three times greater than the rate of extraction from 1 mesh particles.

It was noted that there existed a distinct possibility of losing an appreciable amount of carbon dust during grinding. It was shown that simultaneous grinding and extraction had no appreciable effect on the percentage of uranium extracted.

The consensus of opinion of several workers was that much unreported work had been done on the complete recovery of uranium from graphite by leaching with various solvents, with negative results.

D. Recovery by burning of graphite and subsequent leaching with nitric acid.

1. General

Recovery of uranium from graphite by burning and subsequent leaching of the ash is the method most generally proposed, and is the only method used in large scale operation to recover the bulk of the uranium from graphite. It has been found, however, that this treatment alone does not completely recover the uranium from the ash residue.

V. LITERATURE REVIEW (Continued)

D. Recovery by burning of graphite and subsequent leaching with nitric acid (Continued)

2. Experiments at the University of California

Tolbert and Zebroski (1) conducted two experiments to determine losses relative to recovery of uranium from carbon parts. In the first experiment the carbon contained 0.2% U and .35% ash, and in the second experiment the carbon contained .06% U and 0.1% ash. Analysis of ash was not given. Samples of 100 grams of carbon were ignited in a stream of oxygen. The ash from each 100 gram sample was leached for one hour with either boiling aqua regia, boiling HNO_3 plus 30% H_2O_2, or boiling conc HNO_3. The insoluble material, composed primarily of titanium and vanadium oxides and silica, amounted to .02%, 0.06% and 0.08%, respectively of the carbon ignited. The loss of uranium in the insoluble part after the single treatment with equal volumes of any one of the reagents was stated to be substantially the same and of the order of magnitude of 0.2% or less. Whether the figure of .2% referred to the percent of original uranium or percent uranium in the ash was not clear.

These experiments indicate that if it could be determined that the absolute loss of uranium is primarily a function of the absolute amount of certain constitutients of the ash, and if it could be determined that any insoluble fission products would retain negligible uranium either in combination or occluded, then the loss of uranium in simple ignition and leaching might be quite negligible for a fuel rod containing 2% uranium.

V. LITERATURE REVIEW (Continued)

D. Recovery by burning of graphite and subsequent leaching with nitric acid (Continued)

3. Experiments at Purdue University (5,6,7,8)

Carbon parts containing 0.18% U were burned in air and the ash extracted with HNO_3, HCl, H_2SO_4, $HC_2H_3O_2$, and mixtures of these acids (6). HNO_3 was shown to be the most effective; the residues remaining contained more than 0.1% of uranium. The time of leaching was not given. Original ash was about .4%.

A series of experiments (7) was conducted to show the effect of time upon uranium removal from carbon ash by extraction at 120°C with 70% nitric acid. About 80% was removed by extraction for 1 hour and about 95% was removed by extraction for 4 hours.

4. Experiments on leaching of incompletely burned carbon ash.

Experience at Y-12 has shown that complete combustion of carbon parts is very difficult to obtain, and experiments (2) were conducted to determine the effectiveness of different methods of recovery of uranium from the incompletely burned carbon ash. It was found that a 6-hour leaching of 84 grams of incompletely burned carbon ash with 625 ml of 20% nitric acid at 90°C extracted about 97% of the total uranium. Addition of H_2O_2 to the acid did not increase the yield. A fusion of ash, potassium pyrosulfate, and potassium biflouride in proportions 1:10:2 increased recovery of uranium to 98-99%. No data were given for the percent combustion,

V. LITERATURE REVIEW (Continued)

D. Recovery by burning of graphite and subsequent leaching with nitric acid (Continued)

4. Experiments on leaching of incompletely burned carbon ash (continued). or the percent of ash and uranium in the carbon.

Essentially complete combustion of the carbon can be obtained by either soaking at high temperatures in a stream of air or oxygen, or by bubbling oxygen through a suspension of the ash in liquid sodium hydroxide.

5. Large scale processing at Y-12

Uranium has been recovered from carbon parts for the past three years at Y-12 by burning of the carbon in equipment as shown in Figure 1. Diameter of the combustion chamber is six inches. Detail drawings of the apparatus are available in the files of the Power Pile Division (14). Carbon parts of various sizes are charged to the nickel combustion chamber without grinding and ignited by dropping in a stick of burning wood. A carbon grate is used. A stainless steel combustion chamber was found to be unsatisfactory; nickel combustion chambers perform satisfactorily, in general, for a period of eighteen months if cooled with a water coil, and less than two weeks if not cooled.

Oxygen is fed to the combustion chamber at the rate of about 0.8 cubic feet per minute, and carbon is burned at the rate of about one kilogram per hour. The combustion gases pass through the carbon bed, the carbon grate, the filter, and into an exhaust

[redacted]

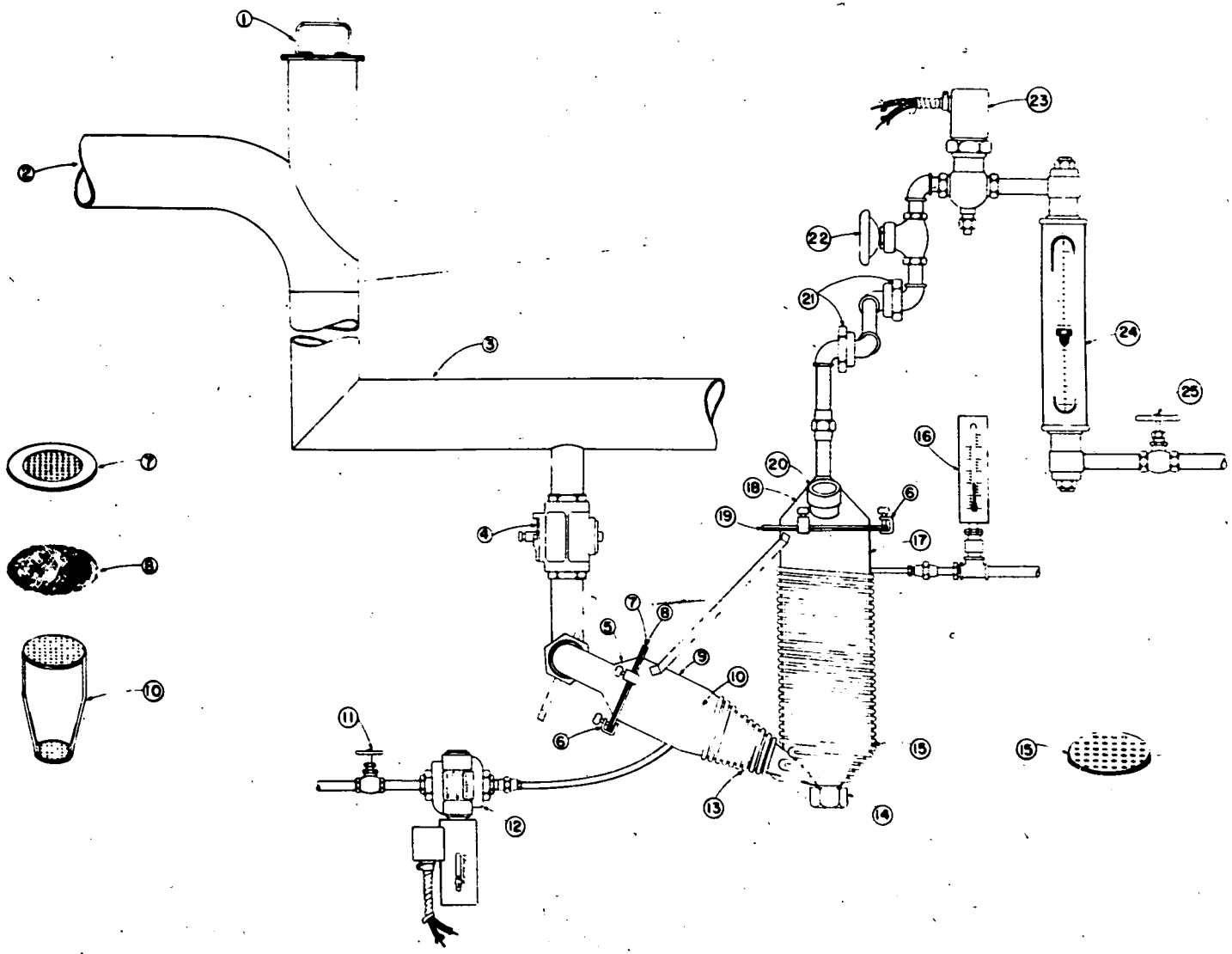

LEGEND

1 EXPLOSION CAP
2 TO COTTRELL
3 MAIN MANIFOLD
4 DAMPER
5. BELL ADAPTOR
6. C-CLAMPS
7. DISC GRATE
8. GLASS CLOTH FILTER
9 BURNER BELL
10 BELL GRATE
11. COOLING WATER INLET VALVE
12. ROTASIGHT FLOW ALARM
13. COOLING WATER COILS
14. SCREW CAP OUTLET
15. CARBON GRATE
16. OUTLET WATER THERMOMETER
17. BURNER CHAMBER
18. BURNER TOP
19. GLASS CLOTH GASKET
20. SIGHT GLASS
21. BARCO SWIVEL JOINTS
22. OXYGEN CONTROL VALVE
23. SOLENOID SHUT-OFF VALVE
24. OXYGEN ROTAMETER
25. OXYGEN FEED VALVE

DRAWN R.A WHIDDEN
1-2-46

Fig. 1. CARBON BURNER

V. LITERATURE REVIEW (Continued)

D. Recovery by burning of graphite and subsequent leaching with nitric acid (Continued)

5. Large scale processing at Y-12 (continued)

manifold leading to a Cottrell precipitator. The carbon monoxide concentration is reduced below explosive limits in the manifold by dilution with nitrogen. A Davis carbon monoxide alarm is provided.

The nickel grate shown as Item 10 is inserted into the exhaust bell and roughly occupies that portion of the bell that is shown as wrapped with cooling coils. The remainder of the exhaust bell is filled with loosely packed glass wool. A glass cloth filter is then held over the end of the bell with a perforated nickel disc. Using a carbon containing about 1.3% uranium, about .4% of the uranium will be found in the filter after burning, and about .03% of the original uranium will escape through and be deposited in the exhaust manifold and Cottrell precipitator. The pressure drop through the filter is presumably a few inches of water.

The glass wool filter, while proving the most efficient filtering medium of various materials tried, presents a rather difficult salvage problem (16). Recovery of uranium from this medium by methods other than solution in HF is limited to reducing the concentration of uranium to the order of 25-50 ppm. The use of bronze wool as a filtering medium is now being studied.

V. LITERATURE REVIEW (Continued)

D. Recovery by burning of graphite and subsequent leaching with nitric acid (Continued)

5. Large scale processing at Y-12 (continued)

In connection with the problem of dusting, there is some evidence to indicate that dusting can be eliminated by refined methods of ignition and burning. T. Rockwell is studying the recovery of uranium from graphite molds used by the Technical Division, and his preliminary work indicates that the loss of uranium in burning can be reduced to a negligible value. In Rockwell's apparatus, ignition temperature is obtained by heating the graphite with an induction coil.

Usually about 2% of the carbon is unburnt, and must be recycled. Complete burning is accomplished by ignition at high temperatures in a muffle furnace.

The next step in the process is a nitric acid leach of the ignited residue. After leaching for three hours with boiling 50% nitric acid, the residue contains in the order of 1000 ppm of uranium if oxidation of the carbon was complete. The residue from the nitric acid leach is fused with about 4-5 times its weight of sodium hydroxide, and oxygen is bubbled through the melt to insure complete oxidation of the carbon. After cooling and leaching again with nitric acid, the residue contains about 50-100 ppm of uranium.

V. LITERATURE REVIEW (Continued)

E. Miscellaneous methods of recovery.

1. General

Methods for recovery listed under this heading fall into two groups:

a. Methods which do not appear to be promising in view of their complexity and incomplete recovery.

b. Methods which give excellent recovery, but which, because of the complications involved in their use, would possibly be used only after all but a small amount of uranium had been removed by simpler methods.

2. Recovery by chlorination.

Balcziak and Newman (3) undertook to determine the feasibility of recovering U by chlorinating powdered carbons at high temperatures. The carbon contained approximately 15% uranium and was ground so that 95% of the material passed an 80 mesh screen. The best result obtained was chlorinating for 30 minutes at 1000°C which resulted in 99.71% recovery of uranium. Usually the carbon during chlorination lost 50% in weight. An attempt to chlorinate at 1100°C resulted in an explosion, indicating that at this high temperature an explosive compound was formed or the reaction was too vigorous. Increasing the time of chlorination resulted in little increase, if any, in recovery of uranium. It was concluded that the last 0.3% to 0.5% is held as a stable silicate or tungstate which withstands the action of hot chlorine. It was stated that only successive fusions with $NaHSO_4$ and leaching with hot 1:1 nitric acid puts the uranium in soluble form. [redacted]

V. LITERATURE REVIEW (Continued)

E. Miscellaneous methods of recovery.

3. Recovery by continuous fusion of ash residues with $NaHSO_4$.

Recovery of uranium from ash residues was attempted (4) by fusion of a 10:1 mixture of $NaHSO_4$ and ash residue, the composition of which is listed below:

		%		%
UO_2		32.7	Cl	0.20
SiO_2		6.68	CO_3	2.92
Al_2O_3		2.16	V_2O_5	trace
Fe_2O_3		19.43	NiO	1.78
MgO		.094	CuO	11.0
CaO		4.16	MnO	.12
TiO		.35	WO_3	1.50
P_2O_5		1.07	TaO	.01
SO_3	less than	0.01	C	16.2
			NH_3	.44

With fusion at 850° to 900°F for 2½ hours, 98.6% of the uranium in the ash was rendered soluble and recovered. It should be noted that vanadium and titanium, both suspected of having a high affinity for uranium in the ash, were present in only very minute or trace amounts in the original ash.

4. Recovery by $K_2S_2O_7$ fusion and H_2SO_4-HF leach.

Ash remaining from carbon burnt in oxygen can be converted to a soluble form by fusion at 500-600°C with $K_2S_2O_7$ followed by treatment of the insoluble residue with a mixture of sulfuric and hydrofluoric acids (6,7). Corrosion tests (7) indicated that a graphite crucible might be satisfactory as a material of construction for the fusion, but that 0.5% of the graphite crucible was dissolved per fusion. Nickel, iron, fireclay, monel and stainless steel were unsatisfactory.

V. LITERATURE REVIEW (Continued)

E. Miscellaneous methods of recovery. (continued)

5. Recovery by fusion with $K_2S_2O_7$ - KHF mixture

At least 99.9% of the uranium in a carbon ash was converted into soluble form (8) by a fusion with $K_2S_2O_7$ - KHF mixtures in ratios of 10:1 to 10:5. Corrosion tests (7) indicated that graphite, platinum and iron might be satisfactory as a material of construction, but the corrosion was very high, except for platinum. Nickel, fireclay, Carbate 2, silver and stainless steel were unsatisfactory.

6. Recovery by use of elemental fluorine.

A two-stage fluorination of carbon ash was performed (5), the objective being to remove volatile silicon and chromium fluorides in the first stage at a relatively low temperature, and then to recover UF_6 in the second stage at a higher temperature. After treatment at 90-114°C for 2.5 hours and at 360-472°C for 2.75 hours, 34% of the uranium was recovered. The total uranium in the ash originally was not given but was presumably of the order of 1-30 ppm.

7. Recovery by leaching of graphite residue with nitric and hydrofluoric acids (5)

The residue from a 96-hour hot nitric acid extraction of 100 g. of carbon ash weighed 37 g. When this residue was leached with 48% HF, the insoluble residue was reduced to 20 g. However, the final residue still gave a positive spectrographic test. No additional details were given. The original carbon presumably contained of the order of 0.15% uranium. [redacted]

V. LITERATURE REVIEW (Continued)

E. Miscellaneous methods of recovery. (continued)

8. Recovery by $K_2S_2O_7$, Na_2O_2 and Na_2CO_3 fusion and H_2SO_4-H_2O_2 leaching.

It was found (5) that $K_2S_2O_7$ and Na_2O_2 fusion permitted extraction of more uranium and left smaller residues than did Na_2CO_3 fusion on leaching with H_2SO_4-H_2O_2 mixture. The residue from $K_2S_2O_7$ fusion contained less than 0.1% uranium by spectrographic analysis, indicating recovery of at least 99.9% of the uranium in the original ash. Ash and uranium content of original carbon was not given.

F. Effect of metal catalysts on burning rate of graphite (10)

Experiments on burning rates of graphite with and without metallic catalysts (nickel and copper impregnated from a 0.1M solution) indicate that though the latter accelerated this rate markedly at 600°C., they are without significant effect at 900°C.

G. Crushing and grinding of graphite

A very considerable amount of work was done at Johns Hopkins University (10) on crushing and grinding of graphite. A high speed impact hammer mill was investigated for plant scale grinding, and tests indicated satisfactory pulverization with dust losses no greater than 0.1%. It was felt that a suitable modification of the machine would solve the problem of grinding with losses not exceeding .02 to .04%.

H. Solubility of fission products and graphite ash.

The individual fission products will be highly dispersed in both the graphite fuel unit and in the oxide residue after fusion, and the usefulness of solubility data obtained on the pure element or pure oxide is questionable. However, the solubility of each individual

V. LITERATURE REVIEW (Continued)

H. Solubility of fission products and graphite ash

fission product and the solubility of its oxide was investigated. It was determined, from a consideration of the chemistry of the pure element or oxide alone, that the following fission products and their oxides might be difficult to dissolve:

Element	Grams/month produced*
Ge	0.003
Sn	0.3
Cb	17
Zr	46

The last two elements listed account for about 98% of the gamma activity of the fission products during the period in which chemical separation is effected.

Experience of the technical division in dissolving fission products in process and decontamination operations is encouraging. In dissolving U and U-Al fuel units little difficulty has been encountered in effecting essentially complete solution of fission products by use of hot 60% nitric acid. Ignition of the fission products, however, might increase the difficulty of dissolving.

The residue from ignition of a spent fuel rod should be completely soluble in fused sodium hydroxide.

* See Section VI

[redacted]

VI. REQUIRED CAPACITY OF RECOVERY EQUIPMENT

The total amount of material involved in the recovery of uranium from graphite fuel units will be very small in comparison to ordinary plant scale operations. It is the purpose of this section to indicate the amounts of certain materials involved; it is felt that these data will be useful in making a decision concerning the feasibility of carrying out certain operations on a hot laboratory scale rather than on plant scale.

Recent estimates on the necessary capacity of chemical separation equipment have been based in part on an average power level of 7000 kw for the power pile. Using this value and assuming 5% depletion of a fuel unit containing 2% uranium of 30% enrichment impregnated in Kendall type graphite, the following quantities of materials will be handled <u>per month</u> by the chemical processing plant:

Uranium	17 kg	
Graphite	850 kg	
Fission products	- 270 grams	
	Including Cb	- 17 grams
	Zr	- 46 grams
	Sn	- 0.3 grams
Graphite ash	- 340 grams	
	Including Ti	- 20 grams
	V	- 14 grams
	Ca	-256 grams
	Fe	- 30 grams
	Si	- 14 grams

Oxygen for burning = 57,000 cu. ft. at std. cond.
(theoretical required for burning to CO_2).

VI. REQUIRED CAPACITY OF RECOVERY EQUIPMENT (continued)

Volume of solvent extraction feed solution

(1) Recovery by Na_2CO_3 fusion of graphite - about 4000 liters

(2) Recovery by ignition and leaching - about 34 liters. Actually the 34 liters represents a minimum theoretical value and a solution of this concentration would be impractical from both heat effect and criticality considerations. The economic advantage of using a solution in this range of concentration on a large scale has been discussed by Daniels (11).

VII. GRAPHITE SPECIFICATIONS

Although there is no quantitative data to indicate how the per cent recovery of uranium varies as a function of the composition and amount of ash, there is strong evidence that the total amount of uranium remaining in the residue after any given treatment is dependent on the amounts of such elements as silicon, vanadium and titanium. Project graphite which contains the lowest ash and also the lowest vanadium, silicon and titanium is the Kendall type graphite, containing .037% ash, including .48 ppm B, 8 ppm V, 12 ppm Ti, 18 ppm Fe, 8 ppm Si, and 150 ppm Ca. Fortunately, this type graphite has also the lowest danger coefficient of the three types of AGOT graphite (Kendall, Gulf Clenes and Whiting), and from the point of view of stress, it has the best combination of modulus of elasticity, coefficient of thermal expansion and thermal conductivity.

VII. GRAPHITE SPECIFICATIONS (continued)

The feasibility of obtaining a graphite with greater purity than the project graphite now used was investigated. It was estimated (12) that graphite having an ash of perhaps as little as 0.001% could be obtained at a cost of ten dollars per pound, as an order of magnitude. The graphite currently being used costs about twenty cents per pound. The increased cost of graphite for pile operation at 7000 kw would be in the order of $17,000 per month.

VIII. SELECTION OF A PROCESS ON THE BASIS OF PRESENT DATA

It is believed that the method of recovery of uranium from graphite which shows the most promise is the ignition of the graphite with oxygen, followed by a continuous leach of the ash with concentrated nitric acid near its boiling point. The available data indicate that at least 99.99% of the uranium can be recovered in this manner, if it develops that the presence of fission products cause no loss of uranium in the insoluble residue. The insoluble residue remaining from the acid leach will be small enough, and should be decontaminated enough to be treated on a hot laboratory scale for additional recovery.

The apparatus required for carrying out the process must make provision for satisfying the following more important requirements.

1. Ignite and burn the graphite.
2. Separate from the combustion gases any dust formed during burning.
3. Leach the ash
4. Recover dust from combustion gas filter
5. Complete oxidation of graphite in the dust and ash, and remove residues from the filters.

VIII. SELECTION OF A PROCESS ON THE BASIS OF PRESENT DATA (continued)

A schematic diagram of the main features of recovery equipment considered feasible is shown in Figure 2. Various service lines, heating and cooling lines, and thermocouples have been omitted. Fuel slugs enter the fuel charging chamber, designed to preheat the fuel slugs and to minimize loss of graphite dust. Burning is accomplished in a water cooled nickel apparatus similar in size to those used at Y-12, ignition being obtained by the use of high temperature oxygen. To minimize formation of hot spots, a liquid cooled nickel grate is used, with carefully controlled down draft. Dusting will be kept at a minimum by careful control of gas velocities, and use of oxygen. Combustion will be taken to near completion by soaking the residue in oxygen at a high temperature. It is believed that all but a negligible fraction of any dust produced can be recovered by use of a porous stainless steel filter having a pressure drop of perhaps several pounds per square inch if necessary.

Since nitric acid attacks nickel, the ash would be transferred to a stainless steel vessel for leaching. The simplest method seems to be the dropping by gravity, with perhaps a water wash, to a vessel below the combustion chamber. The leaching vessel would be provided with a porous stainless steel filter. Provision could be made to maintain a liquid level of acid in the continuous leaching vessel, and to drain the acid. An air jet below the filter would probably be required, and a steam jet between the dust filter and the stack might be required if it is found that a high pressure drop across the filter is necessary to remove essentially all the dust. The recovery of uranium at this point will be over 99.6%, depending almost entirely on the magnitude of the dusting.

FIG. 2 Drawing # 4269

SCHEMATIC DESIGN OF GRAPHITE BURNER-LEACHER

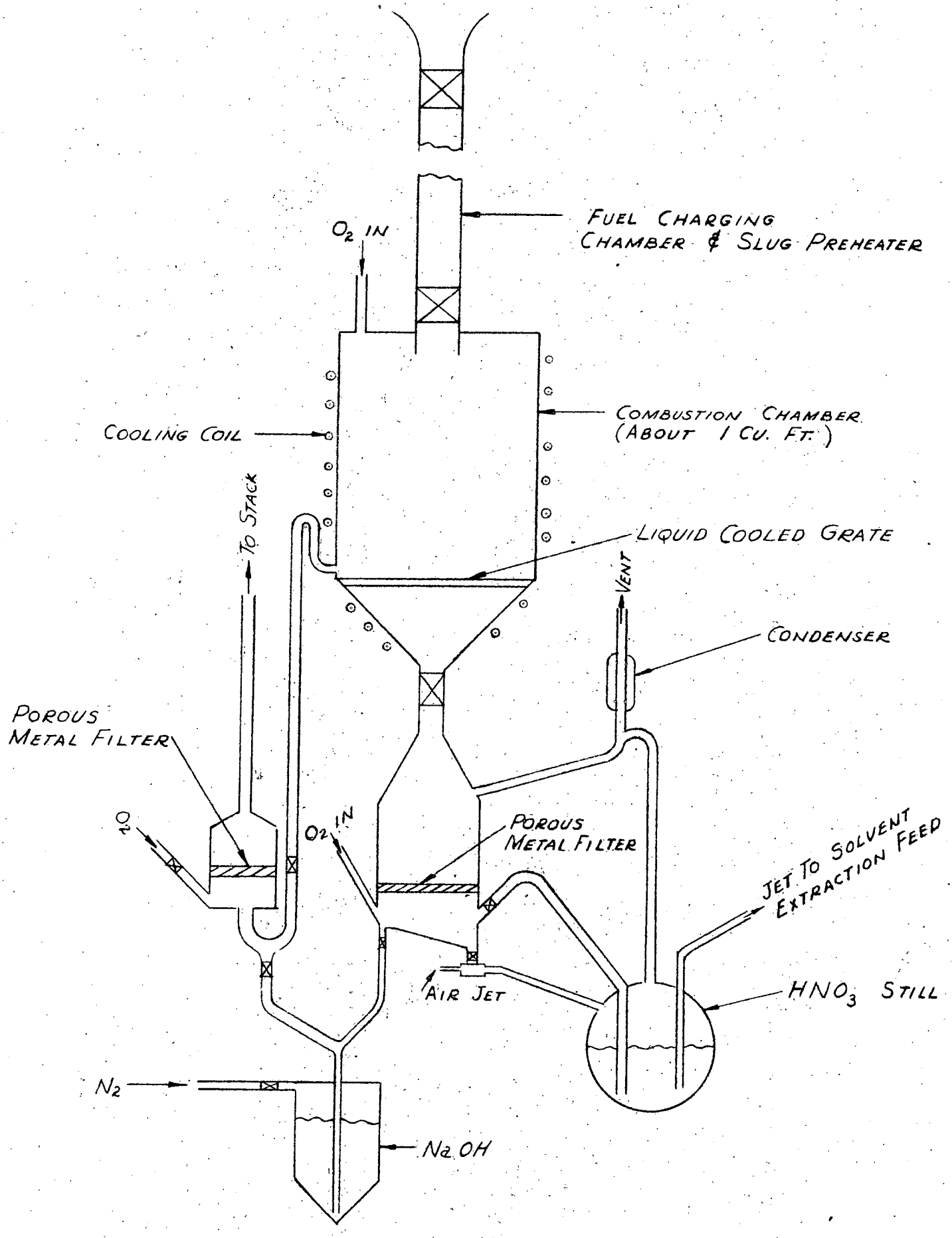

VIII. SELECTION OF A PROCESS ON THE BASIS OF PRESENT DATA (continued)

Removal of dust and residues from filters is accomplished periodically by flooding the filters with molten sodium hydroxide, and bubbling oxygen through the melt to completely oxidize any unburnt graphite. When completely oxidized, all residues should be completely soluble in the molten sodium hydroxide. This step cleans the filters of the small amount of residue, and removes the uranium in a form suitable for further recovery, possibly by hot laboratory methods.

The maximum rate of burning will be limited by the maximum permissible velocity of outlet combustion gases as determined by the carrying over of ash residue. Assuming that a sufficiently low velocity of exit gases would be 0.2 feet per second, assuming complete burning to CO_2 with no excess oxygen, and assuming that the exhaust channels from the combustion chamber could be designed to have a total cross-section of 15 sq. in., one such apparatus as indicated in Fig. 2 would be sufficient to handle the burning of fuel on a continuous basis, with no factor of safety.

In Figure 3, there is shown a similar scheme, provision in this case being made for leaching the dust trapped in the combustion gas filter. This would reduce the amount of uranium to be recovered by the sodium hydroxide fusion.

IX. PROPOSED EXPERIMENTAL PROGRAM

In accordance with the process proposed in the previous section, an experimental program is proposed to obtain data on the following phases of the process, or modifications thereof:

FIGURE 3 CARBON BURNER

Drawing # 4270

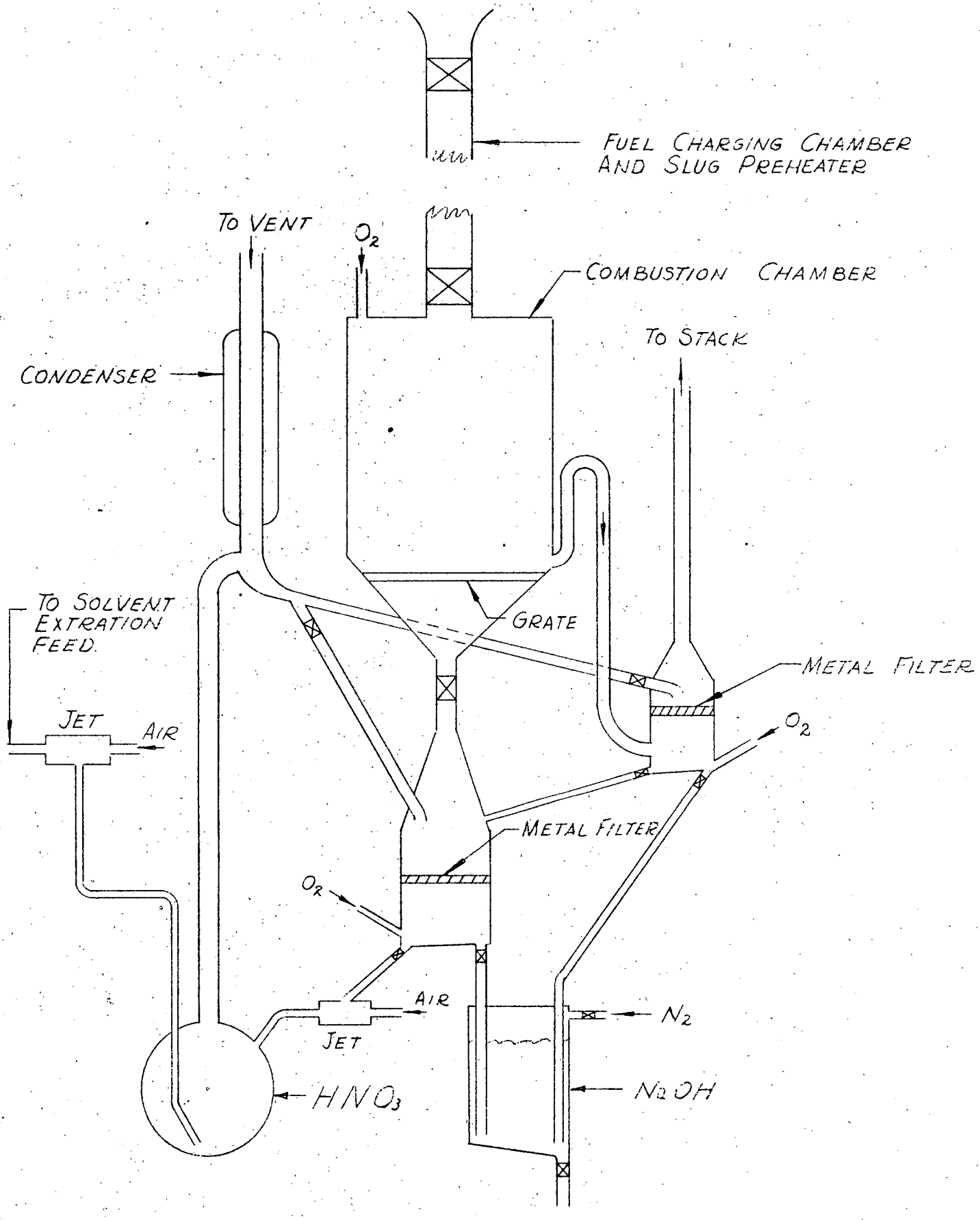

[redacted]

IX. PROPOSED EXPERIMENTAL PROGRAM (continued)

A. The per cent of graphite and uranium leaving the various designs of combustion chambers as dust as a function of rate of burning.

B. The removal of uranium from an ignition residue as a function of time of leaching, and as a function of concentration, temperature and amount of nitric acid.

C. The performance characteristics of various types of powdered metal filters for the gas filtration and leaching of ash residues.

D. The effect of fission products on various phases of the process, especially their solubility and their effect on the solubility of uranium. A synthetic spent fuel unit prepared by adsorption of stable isotopes of fission products from aqueous solution should be useful in the early work. A method of preparation of synthetic fission product mixtures for laboratory use is given in the literature (13).

E. The rate of oxidation of incompletely burned graphite and graphite dust by:

1. Soaking in oxygen at various temperatures
2. Soaking in fused sodium hydroxide through which oxygen is bubbled.

F. The amount of uranium insoluble in acid after sodium hydroxide fusion of the residue obtained in the nitric acid leach, and a laboratory process for recovering this uranium (15).

G. The amount of uranium and fission products which can be removed by leaching of the spent fuel units with HNO_3, and HNO_3OHF mixtures. It might be desirable to add to the process a long leaching, perhaps one of three months duration, while the fuel units are cooling.

[redacted]

[redacted]

IX. PROPOSED EXPERIMENTAL PROGRAM (continued)

It is further proposed that equipment be designed and the adequacy of the equipment and of the burning - leaching process be demonstrated. In order to expedite the completion of this project, it is recommended that the design, construction and testing of a combustion chamber proceed concurrently with the experimental work on the other items listed above.

[redacted]

X. BIBLIOGRAPHY

(1) Tolbert and Zebroski, RL 4.8.40, Sept. 25, 1944.

(2) Gates, Grieger and Pomeroy, C-1.370.1, July 26, 1946.

(3) Balcziak and Newman, CD-GS-40, June 23, 1945.

(4) Bredekamp, Clewett, Darwin, C-5.320.2, Oct. 30, 1945.

(5) M-2102

(6) M-2103

(7) M-2104

(8) M-2105

(9) A-2703

(10) M-2132

(11) Farrington Daniels, CL-FD-26, Dec. 23, 1946

(12) H. G. MacPherson.

(13) Apple and Olson, N-791, "W Fission Mixture for Laboratory Use", Feb. 16, 1944

(14) a. Drawing No. E10e-11264, "Assembly and Details, Nickel Carbon Burner - type 3A."

b. Drawing No. E10e-11265, "General Assembly, Nickel Carbon Burner - type 3A."

(15) Aiken and Armstrong, C-3.385.2, July 6, 1945.

(16) MacKay and Townsend, GCD 964-46, April 17, 1947