MARTIN MARIETTA ENERGY SYSTEMS LIBRARIES
3 4456 0360257 2

CENTRAL RESEARCH LIBRARY
DOCUMENT COLLECTION

B-1251

Cover Page for UNCLASSIFIED Reports

OAK RIDGE NATIONAL LABORATORY

REPORT NO. ORNL-77
This document consists of 29 pages.
This is copy 2 of 110
Series A

Issued To: 706-A

THIS REPORT CONTAINS NO CLASSIFIED INFORMATION

Read By	Date	Read By	Date

OAK RIDGE NATIONAL LABORATORY
CENTRAL RESEARCH LIBRARY
CIRCULATION SECTION
4500N ROOM 175
LIBRARY LOAN COPY
DO NOT TRANSFER TO ANOTHER PERSON
If you wish someone else to see this report, send in name with report and the library will arrange a loan.
UCN-7969 (3 9-77)

ORNL - 77
Health and Biology, General

CYTOGENETICAL EFFECTS OF INTERNAL RADIATIONS FROM RADIOISOTOPES

by

Norman H. Giles, Jr. and Rene A. Bolomey
Biology Division

OAK RIDGE NATIONAL LABORATORY
division of
CARBIDG AND CARBON CHEMICALS CORPORATION

Contract No. W-7405-eng-26

****

June 8, 1948

MARTIN MARIETTA ENERGY SYSTEMS LIBRARIES
3 4456 0360257 2

1. G. T. Felbeck (C & CCC N.Y. - N.Y.)
2. 706-A
3. 706-A
4. 706-A
5. 706-B
6. Biology Library
7. Training School
8. Central Files
9. Central Files
10. Central Files
11. Central Files
12. Central Files
13. E. J. Murphy
14. E. H. Taylor
15. M. D. Peterson
16. A. M. Weinberg
17. A. Hollaender (Y-12)
18. H. Etherington
19. J. A. Cox
20. W. A. Johnson
21. C. D. Cagle
22. S. R. Sapirie (AEC)
23. H. M. Roth (AEC)
24. N. H. Giles, Jr. (Y-12)
25. AEC, Oak Ridge National Laboratory
26-35. Argonne National Laboratory
36. Armed Forces Special Weapons Project
37-38. Atomic Energy Commission, Washington
39. Battelle Memorial Institute
40-47. Brookhaven National Laboratory
48-51. Carbide & Carbon Chemicals Corporation (K-25 Area)
52-55. Carbide & Carbon Chemicals Corporation (Y-12 Area)
56. Columbia University (Failla)
57-60. General Electric Company
61-67. Hanford Directed Operations
68. Iowa State College
69-70. Kellex Corporation
71-73. Los Alamos
74. Massachusetts Institute of Technology
75-76. Monsanto Chemical Company, Dayton
77. National Bureau of Standards
78. Naval Radiological Defense Labs.
79. NEPA
80-82. New York Directed Operations
83. Patent Advisor, Washington
84-98. Technical Information Division, ORDO
99. UCLA Medical Research Laboratory (Warren)
100-104. University of California Radiation Laboratory
105-106. University of Rochester
107-110. Western Reserve University (Friedell)

ABSTRACT

Cytogenetical Effects of Internal Radiations from Radioisotopes

Norman H. Giles, Jr. and Rene A. Bolomey
Biology Division
Oak Ridge National Laboratory
Oak Ridge, Tennessee

Studies have been made of the effects of radiations from radioisotopes taken up in solution by inflorescences of the spiderwort, Tradescantia, in producing chromosomal rearrangements in microspore nuclei. Beta radiations from both phosphorus-32 and carbon-14 are effective in producing chromosomal changes which are cytologically indistinguishable from those produced by external radiation sources such as X-rays. An increase in aberration frequency over that in controls has been detected in inflorescences placed in solutions of initial activities from 100 to 0.1 μc/ml. The sequence of aberration types is fundamentally similar to that observed in previous X-ray experiments, but the relative frequency of chromatid exchanges is considerably higher.

The foundations for a method of correlating the frequency of chromosome aberrations in a given bud with the P^{32} activity of the bud have been laid. It is shown that the best method of sampling buds for the simultaneous determination of P^{32} activity and aberration frequency involves the use of two sets of half-anthers. Using this method, the standard sampling error for both P^{32} determination and chromosome aberrations is of the order of 5%. The total number of disintegrations taking place within a single bud from the time the inflorescence is placed in a P^{32} solution to the time the bud is removed for chromosomal analysis may be determined by slightly modifying the standard mounting of Geiger-Mueller tube and utilizing a recording counter.

Paper to be presented at the Cold Spring Harbor Symposium, June 11, 1948.

Cytogenetical Effects of Internal Radiations from Radioisotopes

Norman H. Giles, Jr. and René A. Bolomey
Biology Division
Oak Ridge National Laboratory
Oak Ridge, Tennessee

One of the most significant effects of ionizing radiations, such as X-and gamma rays, applied externally to organisms is the production of genetic changes -- gene mutations and chromosomal rearrangements. Since the radiations from most radioactive isotopes are fundamentally similar to those utilized as external radiation sources, it is of interest to determine the effectiveness of such radiations in producing genetic changes when these isotopes are present within cells and tissues.

A major problem connected with the utilization of radioisotopes as internal radiation sources is the determination of the radiation dosage. Under certain circumstances this value may be calculated, at least approximately (Marinelli, Quimby, and Hine, 1948). In other cases, attempts must be made to measure the dosage directly. A further problem involves the comparison of the effects of a dosage originating internally with a similar dosage delivered from the outside. Related to these two problems is the possibility that effects of special genetic significance may result from the disintegration of a radioactive atom incorporated in a chromosome. Physical data indicate that the energy of the recoiling atom will be sufficient to cause chemical bond rupture in nearly all cases (Libby, 1947). Thus the position of a disintegrating radioactive isotope within a cell (whether normally incorporated in molecules making up the chromosomes or not) may be of considerable importance.

Investigations of the cytogenetical effects of internal radiations are also of significance in relation to the utilization of radioisotopes in tracer experiments and in therapy. In tracer experiments it is necessary to assume that the radiations do not produce changes sufficient to modify the normal physiology of the system under investigation. It is known, however, that radiations may produce genetic changes which result in profound modifications of normal biochemical processes. (Beadle and Tatum, 1941; Beadle, 1945). Thus it is of some consequence to determine the level of isotope activity at which genetic changes become appreciably common. The consideration of such radiation-genetic effects would appear to be particularly relevant in tracer experiments using haploid microorganisms where pronounced changes in the composition of populations are quite possible.

The increasing utilization of radiations from radioisotopes in therapy makes it necessary to consider the cytogenetical effects, particularly those resulting in cellular death, which these radiations may produce, since in certain treatments such effects may well be of primary importance. Further, in all cases of treatment it would seem desirable to evaluate the possible significance of secondary effects such as the induction of inherited genic and chromosomal changes.

Materials and Methods. In the experiments to be described, the effects of internal radiations from radioisotopes in producing chromosomal rearrangements have been investigated in the spiderwort, Tradescantia. The pioneer researches of Sax (1938) established the spiderwort as an exceptionally valuable experimental organism for the investigation of radiation-induced chromosomal rearrangements. The

recent volume by Lea (1947) summarizes the considerable body of information now available dealing with these effects. In general, the method utilized in past experiments consists of exposing inflorescences to an appropriate external radiation source, making smear preparations of the anthers at definite time intervals following treatment, and analyzing the chromosomal rearrangements visible at the first post-meiotic mitosis in the developing haploid microspores. It is found that the radiations produce breaks in the chromosomes, and the resulting broken ends may either fail to rejoin or may rejoin in various ways to produce visibly aberrant configurations. Two general categories of aberrations are observed: (1) chromatid types, which are produced when chromosomes are broken after they have become effectively double; these are detected from a few hours to approximately 40 hours following treatment. (2) chromosome types, which result when chromosomes are broken while they are still effectively single; these are observed from about 30 hours to several days after irradiation. It is possible to distinguish several different configuration types in the two categories, depending on the number of breaks involved and the manner in which the broken ends rejoin. These various types have been figured and discussed by Sax (1940) and Catcheside (1945). It was first clearly shown by Sax (1940) in X-ray experiments that both chromatid and chromosome break types could in general be divided into two groups on the basis of their relation to radiation dose. Those exhibiting a linear relation with increasing dose are termed one-hit types and are considered to be produced by single ionizing particles (secondary electrons) while those which increase as the square of the dose are termed

two-hit types and result from breaks induced by two separate ionizing particles. Subsequent investigations (Sax, 1941) have shown that a time factor is involved in the production of two-hit types such that at low radiation intensities these types approach a linear relationship to dose.

In the present experiments, inflorescences were removed from Tradescantia plants (clone # 5 of Sax was used in all except the first experiment), placed in a solution of a radioactive isotopes, and cytological examinations made at intervals following the initiation of treatment in the same manner as in experiments utilizing external radiations. In all experiments inflorescences were shielded from radiations originating from the solution to insure that any effect detected could be ascribed to the actual absorption of the radioactive material.

Initial Experiments with Phosphorus-32. In the first experiments, (Giles, 1947) solutions of phosphorus-32 (as $Na_2HP^*O_4$) were used. The P^{32} was added to a nutrient solution containing approximately 0.2 mg/ml of KH_2PO_4. Solutions of several different initial activities were used, ranging from 100 µc/ml to 0.1 µc/ml. At the highest activity (100 µc/ml in the initial solution), examination at the microspore division indicated that within less than 24 hours an appreciable number of chromatid rearrangement types was present. The aberration frequency increased so rapidly with continued treatment that within approximately 48 hours an accurate analysis became impossible. It is thus clear that the absorption of radiophosphorus by a plant such as Tradescantia results in the production of extensive chromosomal changes which may be detected in appropriate dividing cells.

In order to obtain data on the kinds and frequencies of different aberration types at various intervals after the initiation of P^{32} uptake, a series of observations was made utilizing the solutions of lower initial activities. The results of these analyses are summarized in Table 1. The aberration types detected are the same as those produced by external radiation. The following categories and abbreviations have been used in this and subsequent tables: for chromatid types, Cd (chromatid break), Iso. (isochromatid break), Exch. (all exchange types); for chromosome types, 1-hit (terminal and small interstitial deletions), 2-hit (exchanges - rings and dicentrics). Aberrations were detected in inflorescences from each of the three radioactive phosphorus solutions tested. Even with initial activities as low as 0.1 μc/ml of original solution, the aberration frequencies are considerably higher than in the control series. The observed value in the controls agrees well with that obtained in a previous study using comparable but different non-hybrid plants (Giles, 1940). In the phosphorus experiment, it is clear that the aberration frequency increases with time after start of the treatment. Further, at comparable times after the initiation of treatment the aberration frequencies of inflorescences from the three different solutions are clearly correlated with the original activities of the solutions.

In general the aberration types appear in the same sequence as in X-ray experiments. Chromatid types are observed initially, with chromosome types appearing between the third and fourth day. In contrast to the usual radiation experiments with Tradescantia, however, chromatid types do not disappear to be replaced by chromosome types exclusively. Rather they remain the most common type

Table 1

FREQUENCIES OF VARIOUS CHROMOSOMAL REARRANGEMENTS PRODUCED IN TRADESCANTIA MICROSPORE NUCLEI FOLLOWING UPTAKE OF RADIOPHOSPHORUS BY INFLORESCENCES

Time After Start of Experiment	No. of Cells Examined	Chromatid Types per 100 Cells			Chromosome Types per 100 Cells		Total Aber. 100 Cells
		Cd.	Iso.	Exch.	Dels.	Exch.	
	Series B – Initial Concentration of P^{32}: 10μc./ml.						
24 hrs.	165	1.2	0.0	0.0	0.0	0.0	1.2
48 hrs.	127	5.5	7.9	2.4	0.0	0.0	15.8
74 hrs.	130	9.2	6.2	4.6	0.0	0.0	20.0
4 days	109	29.3	3.7	4.6	2.8	1.0	41.4
5 days	114	19.3	8.8	5.3	1.8	1.0	36.2
6 days	108	25.0	7.4	6.5	0.0	1.0	39.9
8 days	86	26.7	16.3	12.8	5.9	3.5	65.2
9 days	84	23.8	13.0	10.8	1.2	3.6	52.4
	Series C – Initial Concentration of P^{32}: 1μc./ml.						
74 hrs.	146	2.7	0.0	0.0	0.0	0.0	2.7
4 days	136	5.1	0.7	0.7	0.0	0.0	6.5
9 days	116	10.3	0.9	1.7	1.7	1.7	16.3
	Series D – Initial Concentration of P^{32}: 0.1μc./ml.						
4 days	142	2.1	0.7	0.0	0.0	0.0	2.8
9 days	134	1.5	0.8	0.0	0.0	0.0	2.3
	Control – no P^{32} added.						
24 hrs.	644	0.0	0.15	0.0	0.15	0.0	0.30
9 days	626	0.0	0.16	0.0	0.0	0.0	0.16

throughout the course of the experiments. This results from the fact that the microspores are being subjected to continuous radiation during their entire development such that chromatid aberrations will be produced when the cell nuclei pass through prophase immediately before the chromosomes are analysed for aberrations at metaphase. The later appearance of chromosome break types, as contrasted with experiments with external radiations when they appear by the second day following treatment, is probably to be explained as a result of a rather slow initial uptake of radiophosphorus, plus the fact that these types exhibit considerably less radiation sensitivity than do chromatid break types. (Sax, 1940).

One striking feature of the comparison of chromatid aberration types is that the ratio of exchanges to simple break types (chromatid and isochromatid) is considerably higher on the average than was anticipated from previous investigations utilizing X-radiation. It is not yet possible to state whether this relatively higher yield of exchanges is to be considered a characteristic feature of treatment with internal β radiation. It may be that many of the exchange types are the result of single hits (single β ionization paths). Further, the restitution time of broken ends may not be as short as was originally suggested by X-ray experiments at high intensities (Catcheside, Lea, and Thoday, 1946).

The majority of the aberration types studied in these experiments are cell-lethal and result in pollen abortion. It is very probable that viable types similar to the eucentric reciprocal translocations produced in somatic cells in various species of wheat by radiophosphorus absorbed by germinating seeds (Arnason,

Cumming and Spinks, 1948) also occur, but no attempt has yet been made to detect these by an examination of meiotic behavior in Tradescantia.

Experiments with Carbon-14. Similar experiments were performed using C^{14} as a radiation source. The C^{14}, originally obtained as Ba C^*O_3, was converted into $(NH_4)_2 C^*O_3$. The resulting solution was adjusted to pH 7.0 and three solutions of differing activities prepared. The chemical manipulations and solution activity measurements were kindly carried out by Dr. David Anthony. Tradescantia inflorescences were placed in the solutions, each of which was kept under a separate bell jar on the roof of the laboratory building during the course of the experiment. The results of the subsequent cytological analyses are presented in Table 2. Initial observations were not made until the fourth day. As in the phosphorus experiments, aberration frequencies at comparable times are correlated with initial activities, and for each activity there is, in general, an increase in aberration frequency with time. Further, the same general relationships of aberration types are observed.

Correlation of Chromosomal Rearrangements with Radiophosphorus Content. The preceeding experiments demonstrate the effectiveness of absorbed radioisotopes in producing chromosomal changes. Further, they indicate that there is a general positive correlation between aberration frequency and initial activity per ml. of a radioactive solution in which inflorescences have been placed.

The next problem is to determine how much radioactive material has been taken up by the plant and to relate the resulting radioactivity to the cytogenetical effect. Such information is essential if quan-

Table 2

FREQUENCIES OF VARIOUS CHROMOSOMAL REARRANGEMENTS PRODUCED IN TRADESCANTIA MICROSPORE NUCLEI FOLLOWING UPTAKE OF CARBON-14 BY INFLORESCENCES (FROM SOLUTIONS OF $(NH_4)_2C^*O_3$).

Time After Start of Experiment	No. of Cells Examined	Chromatid Types per 100 Cells			Chromosome Types per 100 Cells		Total Aber. per 100 Cells
		Cd.	Iso.	Exch.	Del.	Exch.	
Series A - Initial Concentration of C^{14}: 8.2μc./ml.							
4 days	59	32.2	23.7	13.5	0.0	1.7	71.1
6 days	25	80.0	68.0	52.0	0.0	0.0	200.0*
Series B - Initial Concentration of C^{14}: 4.3μc./ml.							
4 days	100	20.0	8.0	7.0	0.0	2.0	37.0
6 days	50	80.0	46.0	26.0	0.0	4.0	156.0
7 days	50	50.0	36.0	38.0	2.0	4.0	130.0
8 days	50	34.0	32.0	26.0	10.0	12.0	114.0
Series C - Initial Concentration of C^{14}: 0.9μc./ml.							
4 days	86	1.2	1.2	4.6	0.0	0.0	7.0
6 days	85	10.6	2.4	1.2	0.0	0.0	14.2
7 days	80	3.8	0.0	1.3	1.3	1.3	7.7
8 days	150	7.3	3.3	0.7	2.0	3.3	16.6

* Aberration frequency too high to permit very accurate analysis.

titative comparisons are to be made between equivalent amounts of external and internal radiation. Consequently, an attempt has been made to develop methods suitable for the simultaneous evaluation of the cytological effects and the "dosage" of radioactivity in a given Tradescantia bud.

The term "dosage" is loosely employed in this paper to express the total number of disintegrations having taken place within a bud and not to denote roentgen equivalents. Before dosage values can be expressed in more conventional terms, it is essential to have a more complete understanding of the effect of the geometry of the bud in terms of the ionizations produced by β particles arising from within the bud.

The most suitable experimental conditions that may be attained will depend on a number of factors. In order to quantitate the radioactivity in a single bud in terms of absolute disintegrations it is essential to obtain conditions of minimum back and forward scattering and of minimum self-absorption of the radiations. These optimum conditions may be realized only by strict observance of the principles involved. (Zumwalt, 1947). The samples must be mounted on thin films such as polystyrene in order to obtain minimum back scattering conditions. The buds must be digested so as to remove the bulk of the matter that would contribute to forward scattering and to self-absorption. The observance of these conditions makes it impossible to evaluate the cytological effect on the same bud used for the estimation of the radioactive content unless one resorts to aliquot sampling.

<u>Distribution of P^{32} in Tradescantia Buds.</u> Preliminary experiments were made to determine the distribution of P^{32} among the buds

of a single inflorescence as well as among the anthers of a single bud. Inflorescences were placed in a solution containing 10μc/ml of P^{32}. After a period of four days buds of approximately the same size and shape were selected from single inflorescences, digested with concentrated nitric acid in the presence of 5 mg. of $Na_2HPO_4 \cdot 7H_2O$ and counted in a standard Geiger-Muller counter. The presence of inactive phosphate is essential to minimize losses of P^{32} by absorption on the glass surfaces of the equipment. The results indicated that even comparable buds selected from the same inflorescence may vary from the average by as much as 64%, and that the values cannot be correlated to the weight of the buds. Such a variation is much too great to permit any correlations to be made and requires that both the P^{32} content and the chromosome aberrations be determined on the same bud.

The next comparison involved a determination of the variation in P^{32} content of the six single anthers from the same bud. Each anther was treated as described previously for the individual buds. The results, although better than those obtained on whole buds, were still not precise enough to permit utilizing three of the anthers for P^{32} analyses and the other three for cytological analysis. The average of the counts per minute for the six anthers was 7,650 ± 8% with an extreme range of 24%. This variation may be considerably reduced by the method discussed below.

Variation in the P^{32} Content of Half-Anthers. In an attempt to obtain more uniform samples suitable both for P^{32} and cytological analysis, it was decided to divide each of the six anthers into halves and to compare the two sets of half-anthers. The division was made under a disecting microscope with a sharp knife. Fairly good

divisions could be made by this method although a small amount of fluid was lost on the knife blade. The amount of P^{32} lost amounted to 1% or less. The half-anthers were prepared for counting as before. Table 3 presents the data obtained by this method. When all samples are considered, the variation about the average is of the order of 5%. Three out of thirteen buds had a greater error, two of which were above 10%. Eight out of thirteen buds had a variation of 2% or less from the average. This value falls within the expected error of the instrument.

Reliability of the Half-Anther Method for Cytological Analyses. Utilizing the half-anther method just described, it is quite feasible to use one group of half-anthers for cytological observations by the usual smear techniques. Thus the initial cytological problem is concerned with determining the reliability of cytological analyses by this method as was done for the P^{32} determination. The results of such analyses are shown in Table 4. All slides were scored under code and the data compilations made after all scorings were completed. Comparisons have been made on the basis of both aberrations (of all types) per 100 cells and breaks per 100 cells. Calculations of breaks per 100 cells have been made in accordance with the results of experiments utilizing X-radiation of relatively high intensity which indicate that chromatid exchanges and chromosome dicentrics and rings are principally two-break (two-hit) types, whereas chromatid and isochromatid types, as well as the majority of terminal and interstitial chromosome deletions, are one-hit types. In the present experiments, however, the radiation intensity has been considerably less than in such X-ray experiments and many of the two-break types are undoubtedly the result of single hits

TABLE 3

COMPARISON OF P^{32} CONTENT OF TRADESCANTIA HALF-ANTHERS.
BUDS REMOVED FROM INFLORESCENCES AFTER FOUR DAYS IN P^{32} SOLUTION
10 μc/ML. INITIAL ACTIVITY)

BUD	HALF-ANTHER SET	COUNTS MIN^{-1}	AVERAGE	PERCENTAGE DIFFERENCE FROM AVERAGE
A	1	8,535	8,652	1.3
	2	8,769		
B	1	8,473	8,350	1.4
	2	8,228		
C	1	9,195	8,875	3.6
	2	8,555		
1	a	6,707	6,333	5.9
	b	5,959		
2	a	8,601	8,773	2.0
	b	8,946		
3	a	17,997	18,362	2.0
	b	18,728		
4	a	3,878	3,428	13.1
	b	2,979		
5	a	2,686	3,009	10.8
	b	3,332		
6	a	10,230	10,706	4.5
	b	11,183		
7	a	11,976	11,876	0.8
	b	11,776		
8	a	18,851	18,804	0.2
	b	18,758		
9	a	17,517	17,453	0.4
	b	17,389		
10	a	8,504	8,516	0.1
	b	8,529		

Average % difference = 3.5

COMPARISON OF P^{32} INDUCED CHROMOSOMAL REARRANGEMENTS IN SINGLE TRADESCANTIA BUDS USING THE HALF-ANTHER METHOD. 10μC./ML. OF P^{32} INITIAL SOLUTION

Time After Start of treatment (days)	Bud No.	No. Cells Examined	Chromatid Types per 100 Cells			Chromosome Types per 100 Cells		Total Aber. Per 100 Cells	Average Aber. Per 100 Cells	% diff. from av.
			Cd.	Iso.	Exch.	Del.	Exch.			
1	A6a	50	0.0	0.0	0.0	0.0	0.0	0.0	2.0	(100)
	A6b	50	2.0	0.0	0.0	0.0	0.0	4.0		
	A9a	50	0.0	0.0	0.0	0.0	0.0	0.0	2.0	(100)
	A9b	50	0.0	2.0	0.0	0.0	0.0	4.0		
2	12a	50	24.0	16.0	30.0	0.0	0.0	70.0	61.3	14.2
	12b	57	15.8	26.3	10.5	0.0	0.0	52.6		
	13a	50	8.0	12.0	2.0	0.0	0.0	22.0	21.0	5.0
	13b	50	2.0	12.0	6.0	0.0	0.0	20.0		
3	15a	50	10.0	18.0	2.0	0.0	0.0	30.0	31.0	3.2
	15b	50	14.0	10.0	8.0	0.0	0.0	32.0		
	16a	50	18.0	42.0	28.0	0.0	0.0	88.0	87.0	1.1
	16b	50	16.0	44.0	26.0	0.0	0.0	86.0		
	17a	50	14.0	28.0	16.0	2.0	0.0	60.0	57.0	5.3
	17b	50	16.0	22.0	16.0	0.0	0.0	54.0		
4	5a	36	44.4	83.3	44.4	2.7	2.7	177.5	180.8	1.8
	5b	25	72.0	64.0	48.0	0.0	0.0	184.0		
	19a	18	5.6	72.2	22.2	0.0	5.6	105.6	113.9	7.3
	19b	18	27.7	55.6	27.7	11.1	0.0	122.2		
6	A5a	50	18.0	32.0	8.0	0.0	6.0	64.0	58.0	10.3
	A5b	50	8.0	20.0	20.0	2.0	2.0	52.0		
	7a	12	75.0	75.0	175.0	0.0	0.0	325.0*	330.3	1.6
	7b	14	71.4	121.4	135.7	0.0	7.1	335.6*		

* Aberration frequencies too high to permit very accurate scoring. Average % difference = 5.5

TABLE 4

TABLE 4A

COMPARISON OF P^{32} INDUCED CHROMOSOMAL REARRANGEMENTS IN SINGLE *TRADESCANTIA* BUDS USING THE HALF-ANTHER METHOD. 10 µC./ML. OF P^{32} INITIAL SOLUTION

BUD NO.	TOTAL BREAKS PER 100 CELLS	AV. BREAKS PER 100 CELLS	% DIFF. FROM AVERAGE	GENERAL AVERAGE ABERRATIONS PER 100 CELLS
A6a	0.0	2.0	(100)	2.0
A6b	4.0			
A9a	0.0	2.0	(100)	
A9b	4.0			
12a	100.0	81.6	22.7	41.1
12b	63.1			
13a	24.0	25.0	4.0	
13b	26.0			
15a	32.0	36.0	11.1	58.3
15b	40.0			
16a	112.0	114.0	1.8	
16b	116.0			
17a	70.0	73.0	4.1	
17b	76.0			
5a	225.0	228.5	1.5	147.4
5b	232.0			
19a	133.0	141.5	6.0	
19b	150.0			
A5a	78.0	76.0	2.6	194.2
A5b	74.0			
7a	500.0	489.3	2.2	
7b	478.6			

Average % difference = 6.2

(single ionization paths). Thus it is probable that the comparison of aberrations per 100 cells is the more valid measure of variability. For both comparisons, when all samples are considered the variations about the average is of the order of 5 to 6%. These comparisons indicate that the precision of the cytological results is about the same as that of the phosphorus determination by this method.

Certain general observations regarding the types and frequencies of various aberration types may also be made on the basis of the data in Table 4. Chromatid aberration types are the only ones recorded in the observations at two days and three days (with one exception) after the initiation of treatment. Chromosome types first appear regularly on the fourth day. These results thus agree with those obtained in previous similar experiments with P^{32}. The average frequency of aberration types per 100 cells increases with increasing time of exposure to the P^{32} solutions as the figures in the last column of Table 4 indicate.

The aberration frequencies recorded with these experiments are in general higher than those obtained in previous experiments in which solutions of about the same initial activity were utilized. The principal reason for such differences is probably the fact that the present solutions were essentially carrier-free, whereas an appreciable amount of inert phosphorus was added to the original solutions. Further, the initial experiments were carried out with a separate clone of plants and under different external environmental conditions, which must necessarily influence the uptake of P^{32}.

Combined P^{32} and Cytological Analyses by the Half-Anther Method. The previous discussion indicates that the half-anther method should be sufficiently accurate to permit correlations to be made between

P^{32} content and chromosome breakage. Consequently, it is of interest to examine the results obtained when both activity measurements and cytological analyses have been obtained from single buds in this manner. Such data are presented in Table 5. The activity measurements are given for whole buds, the recorded count value for a set of half-anthers being doubled and added to that for the remainder of the bud. It is evident that there is a definite positive correlation, between the activity of a given bud and the frequency of chromosomal aberrations. This is particularly true within a single experimental series, and especially at higher activity levels where the statistical reliability of both measurements is better. The aberration frequency in the control utilized in series PV is considerably higher than that obtained in previous controls, but is based on the analysis of a much smaller number of cells.

It is to be noted that the length of treatment varies, and consequently the cytological effect cannot be directly related to the activity as recorded at any one time. Rather it will depend on the total number of disintegrations that have taken place within the bud. This in turn will depend on the rate of uptake of P^{32}, which must be determined for each bud.

Rate of P^{32} Uptake in Tradescantia Buds. In order to obtain the P^{32} uptake curve the standard mounting of the Geiger-Müller tube was slightly modified so that the radiations from the bud could be measured while the radiations from the rest of the plant and the solution could be shielded (Fig. 1). A standard 1024 scaler connected to an Esterline Angus recorder was employed to give a relative time-activity curve. Two such curves are shown in Figure 2. To the P^{32} solution used for curve 2 was added about 10

TABLE 5

COMPARISON OF ACTIVITY MEASUREMENTS (P^{32}) AND CHROMOSOME ABERRATIONS IN SINGLE TRADESCANTIA BUDS USING THE HALF-ANTHER METHOD.

SERIES NO.	BUD NO.	ORIG. ACT. OF P^{32} SOLUTION	DAYS AFT. START OF TREATMENT	NO. CELLS EXAMINED	CHROMATID TYPES 1-HIT		CHROMATID TYPES 2-HIT	CHROMOSOME TYPES		ABERR. PER 100 CELLS	ACTIVITY PER BUD C/M
					CD	ISO	EXCH	1-HIT	2-HIT		
PIV	B-12	1.0μc/ml	8½	100	14	11	3	2	1	31.0	10,184
	B-15a	1.0μc/ml	8½	146	6	4	0	0	1	7.6	5,707
	B-15b	1.0μc/ml	8½	113	1	2	0	0	0	2.7	3,489
	B-20	0.01μc/ml	8½	169	0	0	0	0	0	0.0	43
PV	A-2	0.1μc/ml	8	250	0	0	0	1	0	0.4	684
	A-6	0.1μc/ml	8	124	4	1	0	0	1	4.8	1,144
	A-10	0.1μc/ml	8	164	1	1	0	0	1	1.8	336
	Control	0.0μc/ml	8	185	0	1	0	0	0	0.5	17
PVI	9	10.0μc/ml	2	100	21	17	11	0	0	49.0	40,390
	10	10.0μc/ml	2	100	16	11	3	0	1	31.0	19,707
	5	10.0μc/ml	3	12	9	5	17	0	0	257.3*	96,000
	3	10.0μc/ml	3	100	16	21	6	0	0	43.0	17,130

* Aberration frequency too high for very accurate analysis.

Figure 1.

Geiger-Mueller tube mounting for recording the rate of P^{32} uptake in a Tradescantia bud.

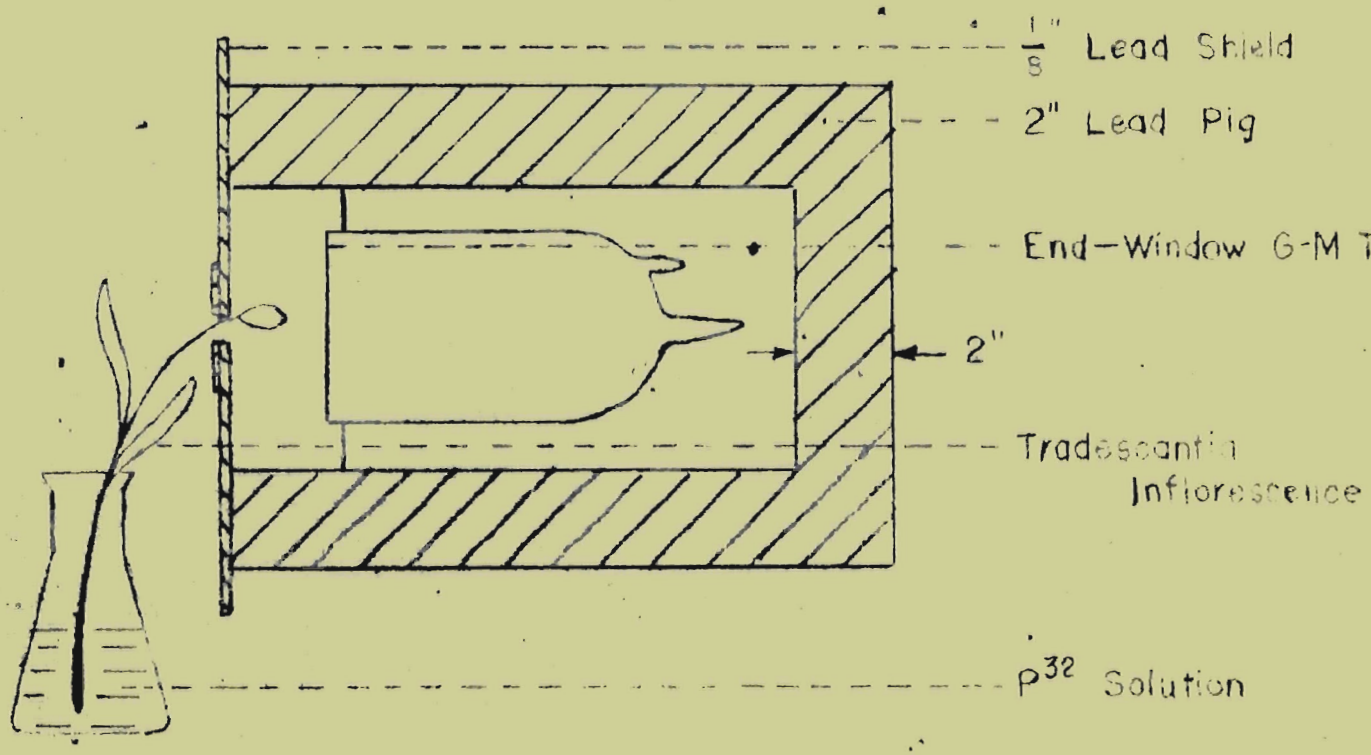

Drawing # 5843

Figure 2

Uptake curves of P^{32} in Tradescantia buds. Curve 1 (— +) - solution practically carrier free; Curve 2 (•••) - 10 mg. of $Na_2HPO_4 \cdot 7H_2O$ added per ml. of solution.

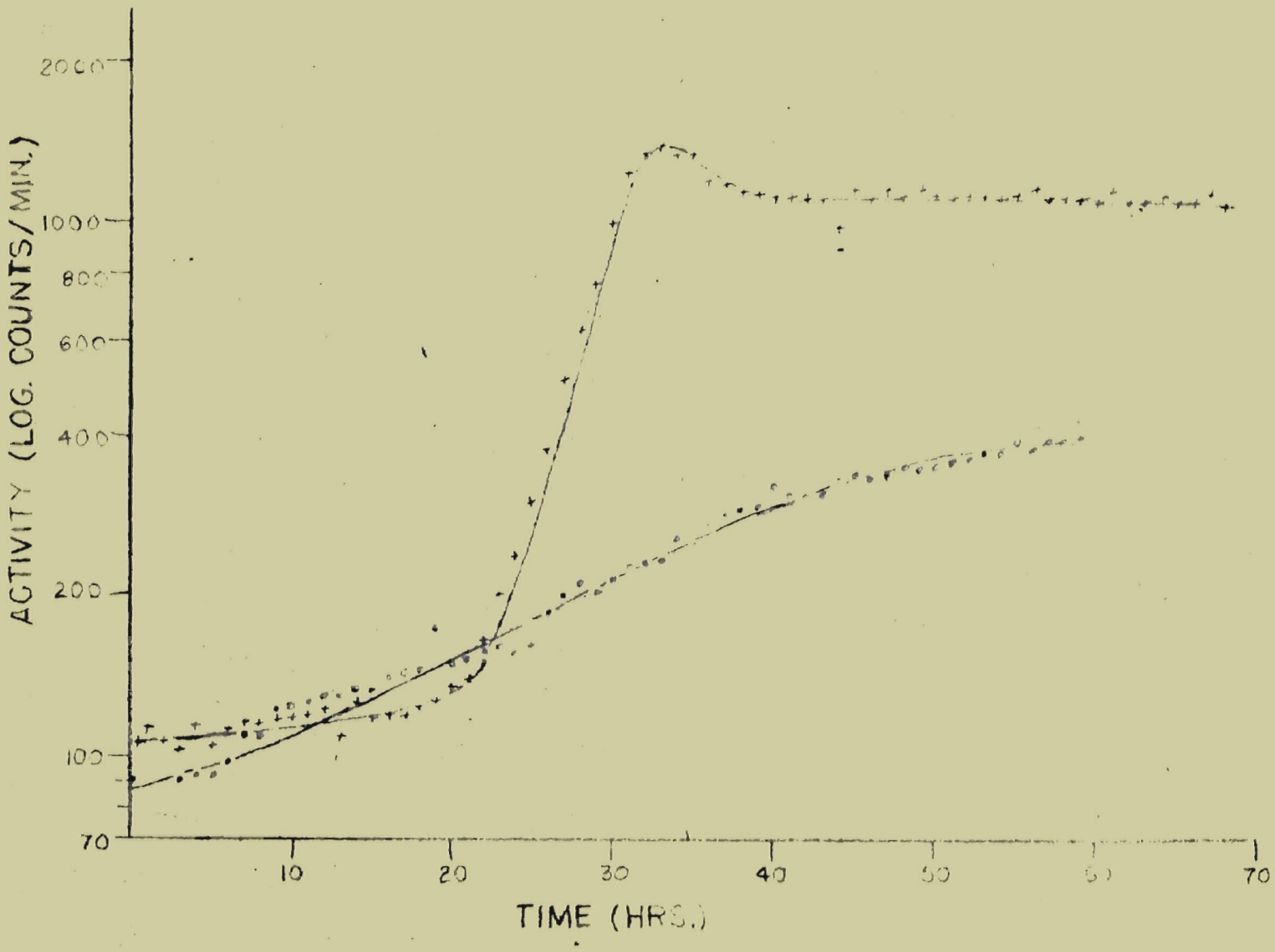

Drawing # 5844

mg. of $Na_2 HPO_4 \cdot 7H_2O$ per ml. The addition of inactive phosphorus to the solution markedly retarded the rate of P^{32} uptake as could be expected from the principle of isotopic dilutions. The other solution, although not carrier-free, contained very little inactive phosphorus.

In order to obtain an absolute count in terms of disintegrations the bud is then dissected. Six half-anthers are employed for the cytogenetic count and the remaining six half-anthers and other parts of the bud may be digested separately with concentrated nitric acid in the presence of phosphate for the determination of the total number of disintegrations for the whole bud at the end of the run. This value may then be employed to correct the relative area under the time curve to absolute number of disintegrations that have taken place from the start to the end of the experiment. This final value then becomes related to the true dose of radiation the bud has received.

Values obtained by the method will have a certain degree of uncertainty depending on the experimental conditions and on the validity of certain assumptions associated with such measurements. These assumptions are that the P^{32} will be equally distributed among the various parts of the bud during the uptake period, the background value will remain constant throughout the run, and the radiations back-scattered from the shield and originating in the unshielded portions of the stem will produce a negligible biological effect. At present we have not completely tested the validity of these assumptions. Preliminary data indicate that they are in part not fully justified and that some further work is required both in the design of the instrument and in the determination of the degree

of uncertainty resulting in such determinations. Nevertheless it is apparent that the results obtained in this way will be much more representative than those correlating the cytogenetic changes with the activity of the solution in which the inflorescences are placed.

There is one further difficulty with the method. The microspore nuclei in the bud may not be in the proper dividing state when the counting is terminated. This point can be determined only by cytological examination. The bud must be left in position in the instrument and can be examined only superficially from time to time during phosphorus uptake provided care is taken that its geometrical position and shape with respect to the tube are not altered. Hence, it may be expected that a fair number of buds will not be usable for cytogenetic analysis. This difficulty can be largely eliminated by the use of a multiple-channel count rate recorder. Such an instrument will permit the simultaneous analysis of P^{32} uptake in several buds, of which those in the appropriate state of mitosis can be used for cytological analysis.

Data correlating chromosome aberrations with the total number of disintegrations taking place within a single bud from the time an inflorescence is immersed in the P^{32} solution to the time the bud is sampled are not yet available. However, it is clear from the preceding tables that there is a distinct trend showing an increase in the number of aberrations occurring per 100 cells with time. It is apparent that much of the variation found among buds for any given treatment would have been considerably decreased had the data been correlated with the total number of disintegrations that had taken place.

Summary

Studies have been made of the effects of radiations from radioisotopes taken up in solution by inflorescences of the spiderwort, Tradescantia, in producing chromosomal rearrangements in microspore nuclei. Beta radiations from both phosphorus-32 and carbon-14 are effective in producing chromosomal changes which are cytologically indistinguishable from those produced by external radiation sources such as X-rays. An increase in aberration frequency over that in controls has been detected in inflorescences placed in solutions of initial activities from 100 to 0.1 μc/ml. The sequence of aberration types is fundamentally similar to that observed in previous X-ray experiments, but the relative frequency of chromatid exchanges is considerably higher.

The foundations for a method of correlating the frequency of chromosome aberrations in a given bud with the P^{32} activity of the bud have been laid. It is shown that the best method of sampling buds for the simultaneous determination of P^{32} activity and aberration frequency involves the use of two sets of half-anthers. Using this method, the sampling error for both P^{32} determination and chromosome aberrations is of the order of 5%. The total number of disintegrations taking place within a single bud from the time the inflorescence is placed in a P^{32} solution to the time the bud is removed for chromosomal analysis may be determined by slightly modifying the standard mounting of Geiger-Müller tube and utilizing a recording counter.

References

Arnason, T. J., E. Cumming, and J. W. T. Spinks. 1948. Chromosome breakage in plants induced by radioactive phosphorus. Science, 107: 198-199.

Beadle, G. W. 1945. Biochemical genetics. Chem. Revs. 37: 15-96.

Beadle, G. W. and E. L. Tatum. 1941. Genetic control of biochemical reactions in Neurospora. Proc. Nat. Acad. Sci. 27: 499-506.

Catcheside, D. G. 1945. Effects of ionizing radiations on chromosomes. Biol. Revs. 20: 14-28.

Catcheside, D. G., D. E. Lea, and J. M. Thoday. 1946. The production of chromosome structural changes in Tradescantia microspores in relation to dosage, intensity, and temperature. Jour. Genet. 47: 137-149.

Giles, N. H., Jr. 1940. Spontaneous chromosome aberrations in Tradescantia. Genetics 25: 69-87.

Giles, N. H., Jr. 1947. Chromosome structural changes in Tradescantia microspores produced by absorbed radiophosphorus. Proc. Nat. Acad. Sci. 33: 283-287.

Lea, D. E. 1947. Actions of radiations on living cells. Cambridge Univ. Press.

Libby, W. F. 1947. Chemistry of energetic atoms produced by nuclear reactions. Jour. Amer. Chem. Soc. 69: 2523-2534.

Marinelli, L. D., E. H. Quimby, and G. J. Hine, 1948. Dosage determination with radioactive isotopes. I. Fundamental dosage formulae. Nucleonics 2: 56-66.

Sax, K. 1938. Chromosome aberrations induced by X-rays. Genetics 23: 494-516.

Sax, K. 1940. An analysis of X-ray induced chromosome aberrations in Tradescantia. Genetics 25: 41-68.

Sax, K. 1941. Types and frequencies of chromosomal aberrations induced by X-rays. Cold Spr. Harb. Symp. Quant. Biol. 9: 93-101.

Zumwalt, L. R., 1947. Absolute beta counting using end-window Geiger-Mueller counter tubes. United States Atomic Energy Commission. Report MDDC-1846.