[redacted]

CENTRAL RESEARCH LIBRARY
DOCUMENT COLLECTION

ORNL 110
PHYSICS_INSTRUMENTATION
8A

MARTIN MARIETTA ENERGY SYSTEMS LIBRARIES
3 4456 0360286 7

PHYSICS DIVISION

AN INSTRUMENT FOR MEASURING THE LOGARITHM OF NEUTRON LEVEL AND THE PERIOD OF A PILE

W.H. JORDAN, H.B. FREY, GEORGE KELLY

CENTRAL RESEARCH LIBRARY
DOCUMENT COLLECTION
LIBRARY LOAN COPY
DO NOT TRANSFER TO ANOTHER PERSON
If you wish someone else to see this document, send in name with document and the library will arrange a loan.

[redacted]

OAK RIDGE NATIONAL LABORATORY

OPERATED BY
CARBIDE AND CARBON CHEMICALS CORPORATION
FOR THE
ATOMIC ENERGY COMMISSION
POST OFFICE BOX P
OAK RIDGE, TENNESSEE

TRANSMITTAL DATED 12-21-49

[redacted]

[redacted]

This document consists 17 pages.
Copy 8 of 126 Series A.

ISSUED: Training School Library

Report Number: ORNL-110
Physics-Instrumentation

DECLASSIFIED Per Letter Instructions Of AEC 2-16-54

Contract No. W-7405, eng 26

PHYSICS DIVISION

3/15/54 SUPERVISOR CENTRAL FILES ORNL

AN INSTRUMENT FOR MEASURING THE LOGARITHM OF NEUTRON LEVEL AND THE PERIOD OF A PILE

W. H. Jordan, H. B. Frey, George Kelly

[redacted]

Date Issued

NOV 23 1948

OAK RIDGE NATIONAL LABORATORY

operated by
Carbide and Carbon Chemicals Corporation
for the
Atomic Energy Commission
Post Office Box P
Oak Ridge, Tennessee

[redacted]

MARTIN MARIETTA ENERGY SYSTEMS LIBRARIES
3 4456 0360286 7

[redacted]

AN INSTRUMENT FOR MEASURING THE LOGARITHM OF NEUTRON LEVEL AND THE PERIOD OF A PILE

W. H. Jordan, H. B. Frey, George Kelly

High level safety circuits provide very effective protection for a pile operating at a level near the trip level. On the other hand, there is always a time lag in the operation of these circuits which will allow the pile to go to a dangerously high power if the period of the pile is very short when the trip level is reached. Such a situation is most likely to occur during the start-up of a pile that has a large amount of excess reactivity. The instrument described here was designed to measure the pile period at levels far below operating power up to full power; it provides signals which can be used to actuate shim and safety rods in such a manner that dangerously short periods are never reached.

The principle of operation of the instrument can best be seen by referring to Figure 1.

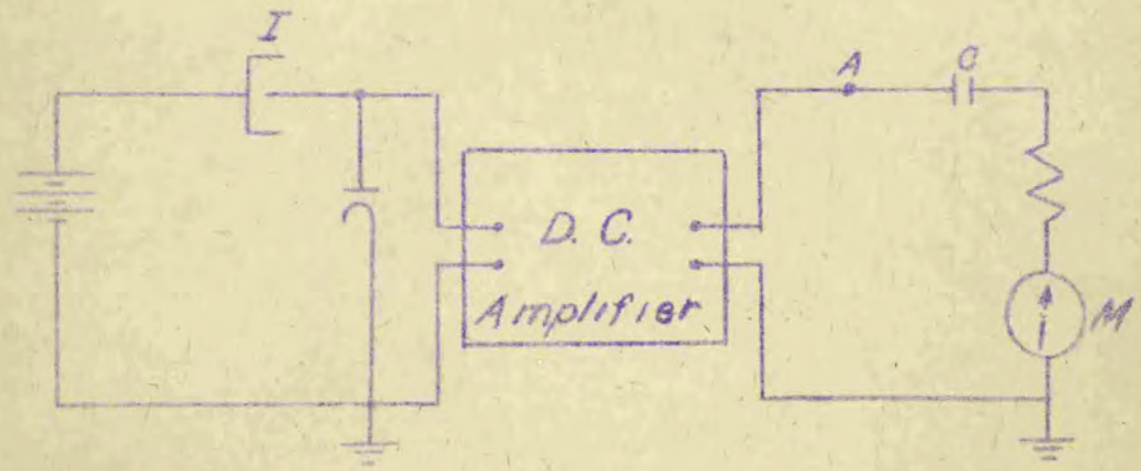

Fig. 1

[redacted]

An ionization chamber I is inserted into the pile so that a current, i, is produced proportional to the neutron flux. This current flows through a diode which has the property of producing a voltage proportional to log i. This voltage is amplified and connected to an R C differentiating circuit in series with a current meter, M.

The voltage at point A can be expressed by the relation

$$V = A \ln kn. \qquad (1)$$

If, at time t = 0 the neutron flux starts increasing exponentially with a period T, then

$$n = n_0 e^{\frac{t}{T}},$$

so that

$$V = V_0 + \frac{At}{T}. \qquad (2)$$

The current flowing in the meter is given by

$$i = C\frac{dV}{dt} + i_2 e^{-\frac{t}{RC}}. \qquad (3)$$

Neglecting the transient term

$$i = \frac{AC}{T}.$$

If we choose AC = 1, then the current through the meter is equal to the reciprocal of the period and the scale can be calibrated to read the period of the pile directly. In the instrument here described, AC is chosen

equal to 3×10^{-4} so that a current of 100 μ amps will be obtained for a 3 second period. For $C = 30\ \mu f$, $A = 10$. Substituting this value of A into equation (1) and remembering that $\ln 10 = 2.30$, one sees that a change in neutron level of a factor of ten corresponds to a voltage change of 23 volts.

Effect of Transients

From equation 3 it is seen that the meter approaches the correct reading with a time constant R C, so that it would appear desirable to make R as small as possible. On the other hand too small a value of R is not desirable for the effects of sudden changes of the voltage at point A, due to noise, power line fluctuations, or pile transients are reduced by making R large. Let us assume a sudden jump in neutron level from n_o to n. This will cause a voltage change ΔV, where

$$\Delta V = A \log \frac{n}{n_o} \quad .$$

The instantaneous current through the meter will then be

$$i_t = \frac{\Delta V}{R} = \frac{A}{R} \log \frac{n}{n_o} \quad .$$

Again choosing $A\ C = 1$, we have

$$i_t = \frac{1}{R\ C} \log \frac{n}{n_o} \quad . \qquad (4)$$

By choosing R large, we can make the current (reciprocal period) due to the pile transient as small as desired. As a reasonable compromise, if $R\ C = 1$ second, then a jump in pile power by a factor of e would be required to produce a current equal to that produced by a 1 second period. If $R\ C = 0.1$ second,

a transient jump in neutron level of 10 percent could be tolerated before a 1 second period would be indicated.

Diode Characteristics

The accuracy of the instrument depends on choosing a diode that has a logarithmic characteristic of over the range of currents to be encountered. The maximum current consistent with long ionization chamber life is about 10^{-4} amperes. Noise and speed of response sets the minimum current at 10^{-10} or 10^{-11} amperes. Several diodes have been investiaged and reported on previously. (ORNL-51 and CNL-35). The 9004 appears to be the most satisfactory. A graph of retarding voltage across the diode versus the logarithm of the current through the diode is shown in Figures 2a and 2b. It will be noted that departures from a straight line, over the previously mentioned range, are very small. (Curves for the region between 10^{-7} and 10^{-10} amperes are not shown because the points fall perfectly on a straight line.) On the other hand the retarding voltage for a given diode current is quite sensitive to heater current, so that some means of regulating this current must be provided. In the present model this is taken care of by the use of a constant voltage (Sola) transformer for supplying heater voltage. This is rectified in a full wave selenium rectifier circuit and filtered with a condenser and resistor. The use of direct current through the heater is necessary to prevent hum pick-up and emission of electrons from heater to plate during the negative half cycle. The voltage across the diode heater is 5.5 volts.

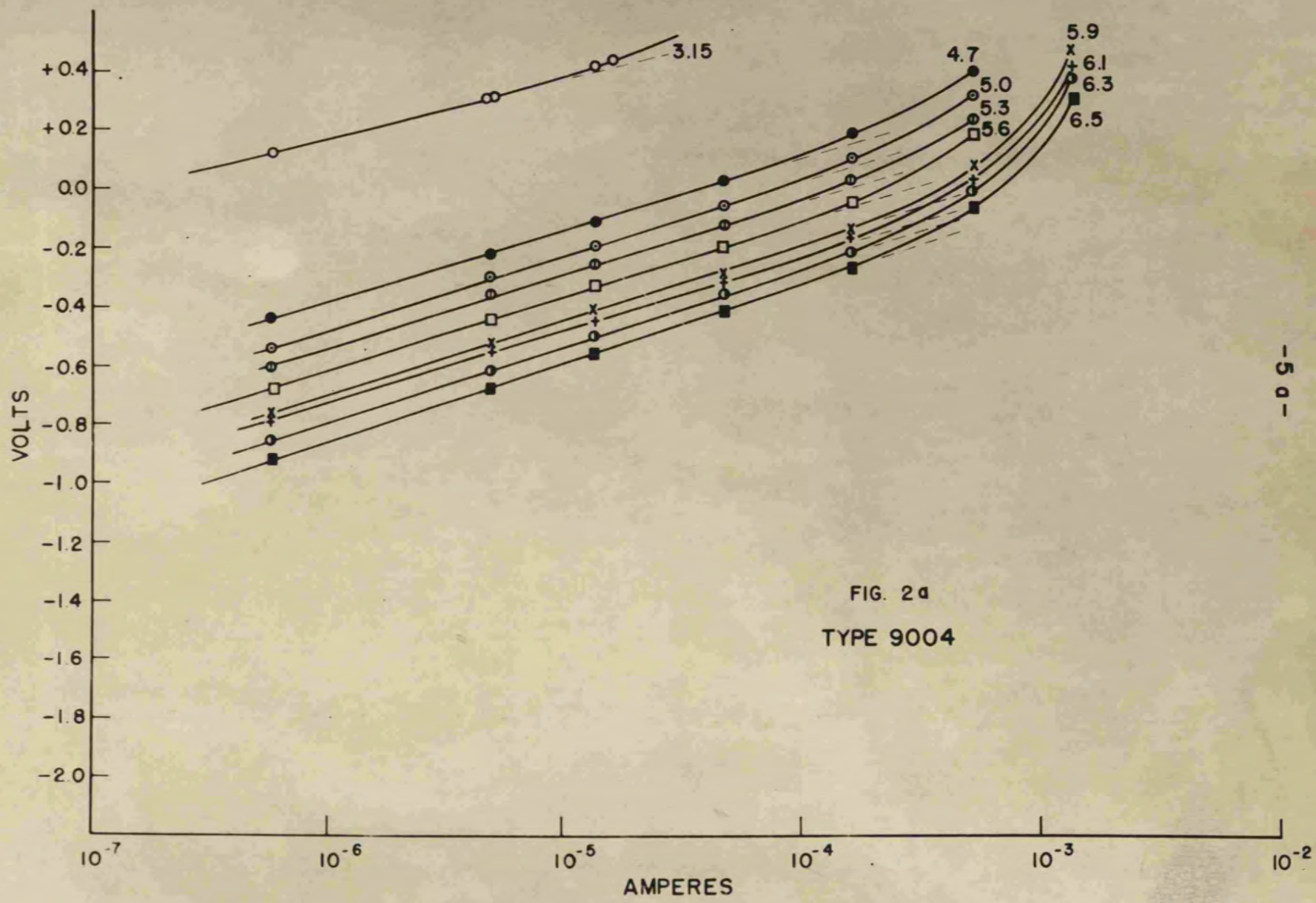

FIG. 2a

TYPE 9004

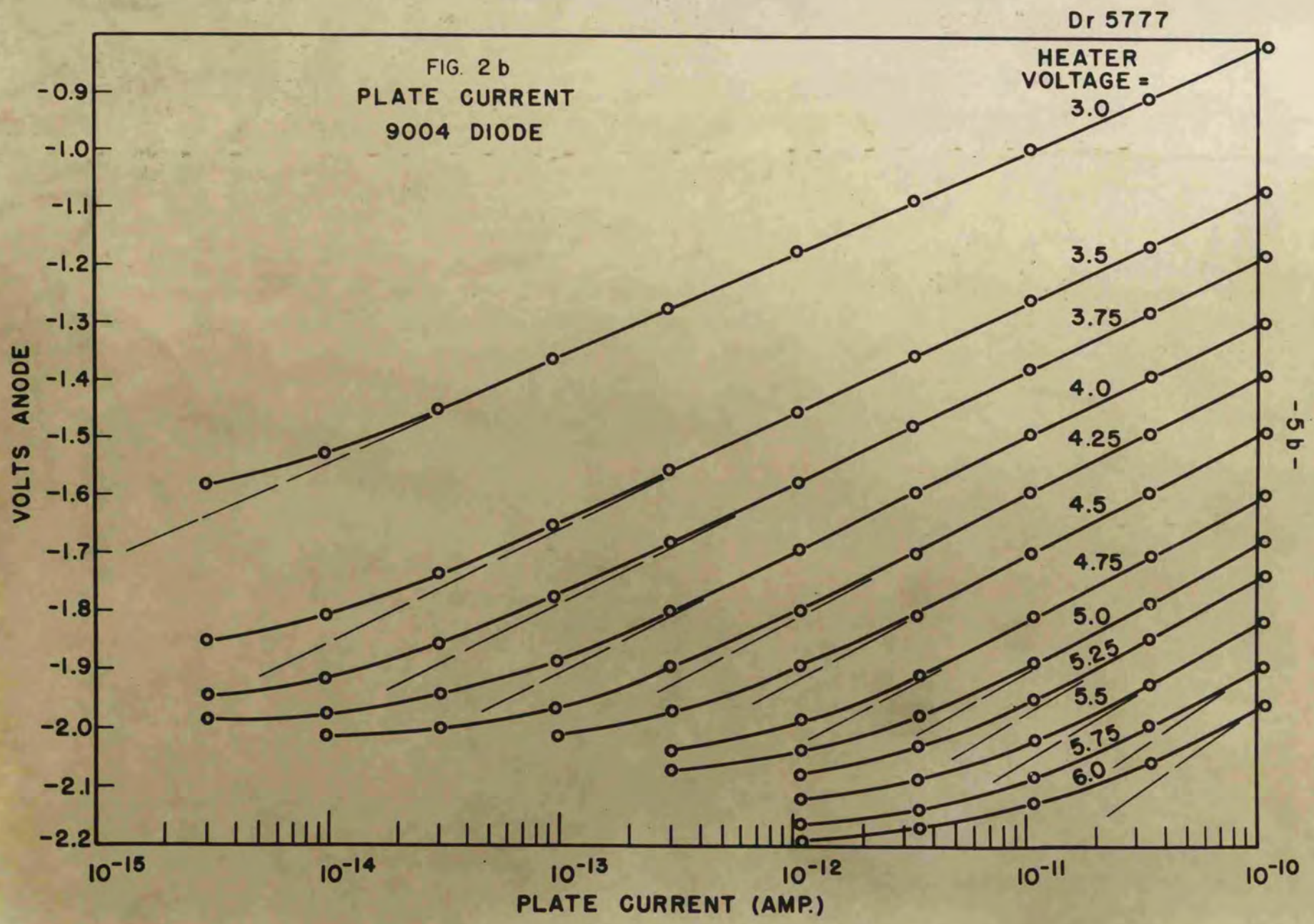
Dr 5777
FIG. 2 b
PLATE CURRENT
9004 DIODE
HEATER
VOLTAGE =
3.0
3.5
3.75
4.0
4.25
4.5
4.75
5.0
5.25
5.5
5.75
6.0
VOLTS ANODE
-0.9
-1.0
-1.1
-1.2
-1.3
-1.4
-1.5
-1.6
-1.7
-1.8
-1.9
-2.0
-2.1
-2.2
10^{-15}
10^{-14}
10^{-13}
10^{-12}
10^{-11}
10^{-10}
PLATE CURRENT (AMP.)

Circuit

A schematic diagram of the circuit is shown in Figure 3. The d.c. amplifier employs an electrometer tube as the input stage, a pentode high gain voltage amplifier, and a cathode follower output stage. Degenerative feedback between the cathodes of the last and first stage is used to keep the gain constant and improve the linearity. Log n can be read on M_2 or on a 10 millivolt recorder connected to J_5. The voltage between cathode of V_4 and ground varies from 35 to 173 volts as the input current is changed from 10^{-10} to 10^{-4} ampers. Calibration of the instrument at these two points is checked by disconnecting the chamber and connecting the arm of switch S_1 to R_1, or R_2.

Two derivative circuits are included. The first is for indicating periods from about 50 seconds to 3 seconds, the shorter period producing a full scale deflection of a 100 μ amp meter M_1, or recorder connected to J_1. This circuit has a 1 second time of response ($R_1 C_1 = 1$). The second derivative circuit has a 0.1 second response time and produces a current of 100 μ amps with a 0.3 second period. Although provision for operating an external meter or recorder has been made; the second derivative circuit was intended primarily for "scramming" the pile when the period becomes shorter than one second. A 1 second period will produce a signal of one volt at J_3 in addition to the 0.9 volts of bias already present. The high level safety circuit will be connected to J_3 so that the safety rods will be tripped by short positive periods.

Biased diodes, V_5 and V_6, are connected across each derivative circuit to protect the meters against large transients such as those produced by turning on or off the equipment.

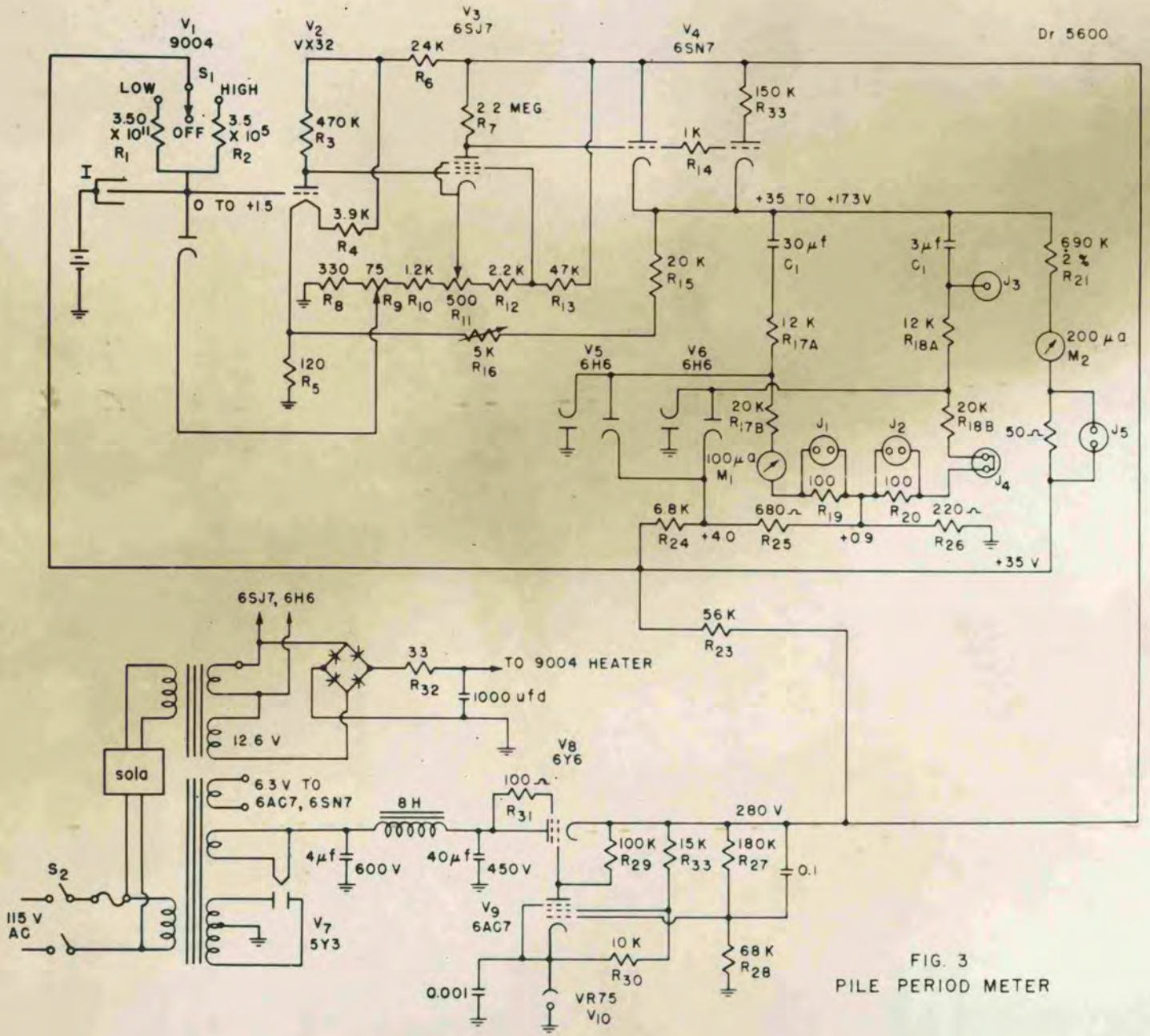

FIG. 3
PILE PERIOD METER

Adjustment of Controls

If the log n meter M_2 is to be relied upon, it will probably be necessary occasionally to correct for slow drifts in reading. This is done by disconnecting the chamber and throwing switch S_1 to the low position. With the input terminal grounded, adjust the "zero set" potentiometer, R_{11}, until M_2 indicates zero current. (If the meter is calibrated to read log n, it should read 10^{-6} at this time.) Then remove the ground from the input terminal and set the "bias" potentiometer, R_9, until the meter again reads zero current. The gain of the amplifier can now be checked by throwing S_1 to the high position and adjusting the "slope" potentiometer, R_{16}, until M_2 reads full scale (200 μ amps). If any adjustment is required, S_1 should be returned to the "low" position and setting of R_{11} should be rechecked. The setting of the bias potentiometer should not be changed.

The bias potentiometer is provided so that the potential of the collecting electrode and chamber leads will be near ground when the currents are small, thus minimizing the effect of any insulator conductance.

Range

The instrument is designed to indicate the logarithm of the current from 10^{-10} to 10^{-4} amperes. There are many factors that limit the useful range to this region. The high current end is limited by the diode capabilities and the maximum current that the ion chamber can produce consistent with reasonable life.

The low current end is not strictly a meter limitation (the diode is still logarithmic at 10^{-11} amps) but involves the ion chamber and its leads. First of all it was necessary to develop a chamber that would produce a current proportional to neutron flux over a large range of flux levels. The chief difficulty here is that after the chamber has been exposed to an intense neutron flux it becomes radioactive. If, then the neutron intensity is reduced below a certain level, the ionization in the chamber will be chiefly that due to its own radioactivity. By using materials with low activation cross sections, such as lead and graphite, a chamber has been made with a range of well over a million[1,2,3].

The measurement of currents down to 10^{-10} amperes requires that leakage resistances be kept higher than 10^{11} ohms.

No trouble from leakage has been experienced at 10^{-10} amperes but such trouble becomes increasingly difficult to prevent and the instrument becomes less dependable as the current is reduced.

Finally, there is a limitation in the noise from the chamber. The chamber is sensitive to neutrons because particles from the $B^{10}(n,\alpha)Li^{7}$ reaction ionize the gas. Since each particle produces some 70,000 ion pairs, the current comes in bursts. When the current is small, the statistical fluctuations in the current cause the period meter to fluctuate. MacNeille[3] has shown that with a meter bandwidth of 1 cycle, a current of 10^{-11} amperes

---

1) F. C. Armistead, Mon P-203.

2) L. W. Mead, Mon P-316.

3) S. M. MacNeille - to be published.

Dr 6316

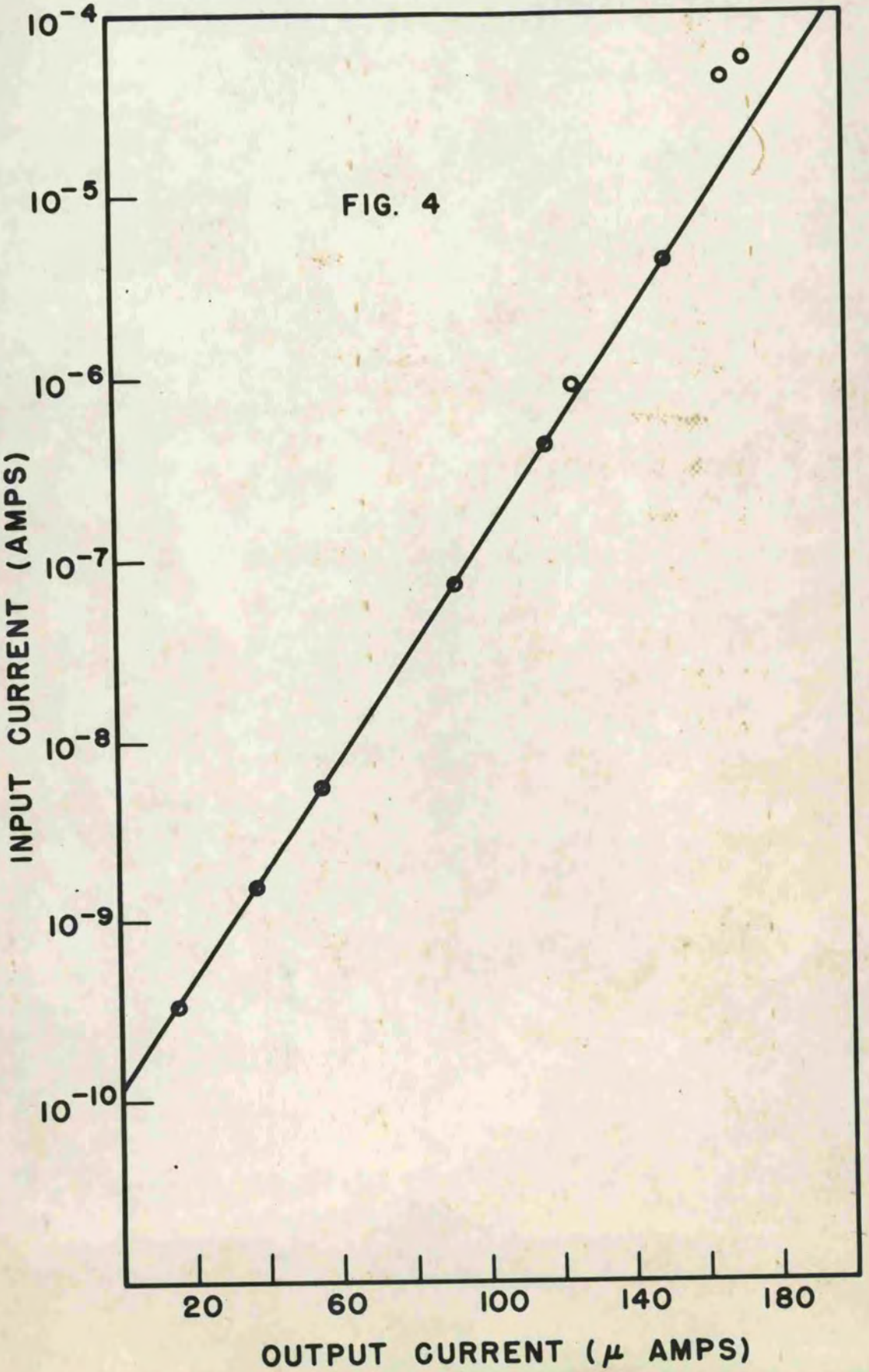
FIG. 4
INPUT CURRENT (AMPS)
10^{-4}
10^{-5}
10^{-6}
10^{-7}
10^{-8}
10^{-9}
10^{-10}
20
60
100
140
180
OUTPUT CURRENT (μ AMPS)

would be noisy to the point of causing the period meter to kick up to periods readings of 10 sec. This means that in order to measure long periods with small currents, the bandwidth must be narrowed. The diode circuit automatically provides this feature because the resistance of a diode is approximately 0.1/i. This resistance and the fixed chamber capacity effectively limit the bandwidth. For C = 300 $\mu\mu f$ and $i = 10^{-11}$ amp, $\Delta f = \frac{1}{2\pi RC} = \frac{1}{20}$ cycle. With this bandwidth 100 sec, periods could be observed, although the response time would be somewhat slow.

Performance

The overall response of the log n meter has been checked by applying known currents to the input of the instrument and observing the reading of the log n meter, M_2. A typical calibration curve is shown in Figure 4. The points depart from a straight line at high levels chiefly because of the method of obtaining bias for the diode. At high levels the chamber current flowing through resistors R_8 and R_9 produces enough voltage drop to affect the output voltage considerably. This could be avoided by returning the chamber power supply to the cathode of V_1 instead of ground, or by using a lower impedance bias supply.

The instrument has been operated continuously with the X-pile for over a month without failure. Recordings of the log n and d log n/dt have been made by connecting Brown recorders to the meter. Figure 5 is a tracing from a recorder chart connected to read log n. At time t = 0 the pile was shut down and the decay is shown for some 12 minutes. At this time the safety and shim rods were pulled out, one by one, each causing a discontinuity in the slope.

As the last safety rod was pulled, the pile went over critical and one can see a sharp transient rise followed by an exponential rise until the safety circuits were tripped.

At the same time that log n was being recorded the period was also recorded and a tracing shown in Figure 6. The zero was set at 10 divisions so that both positive and negative periods could be observed. The increase in noise as the current decreases is very apparent on this tracing.

After about 5 minutes the short period delayed neutrons have disappeared and the pile decays with the 80 sec. delayed neutron period. This provides a good check on the instrument. It can be seen that the log n tracing is straight after about 5 minutes; the measured slope indicates a period of 79 sec. on the first shut down and a period of 83 sec. on the second shut down. The period meter reads approximately 3.8 divisions on the chart, or 79 sec., on each shut down.

Precautions to be Observed in Using Instrument

It has been observed that a large surge of electrometer tube grid current results in a change in its characteristics followed by a slow recovery. Such a current surge is produced, for example, when the ionization chamber collecting voltage is suddenly applied. It is, therefore, recommended that S 1 be thrown to the high position and the power to the instrument turned off before making any changes that may produce current surges. In the future S 1 will be turned around so that the switch arm is connected to the diode and the third switch point connected to ground. With the electrometer grid grounded, no damage from current surges should be possible.

Dr 6317

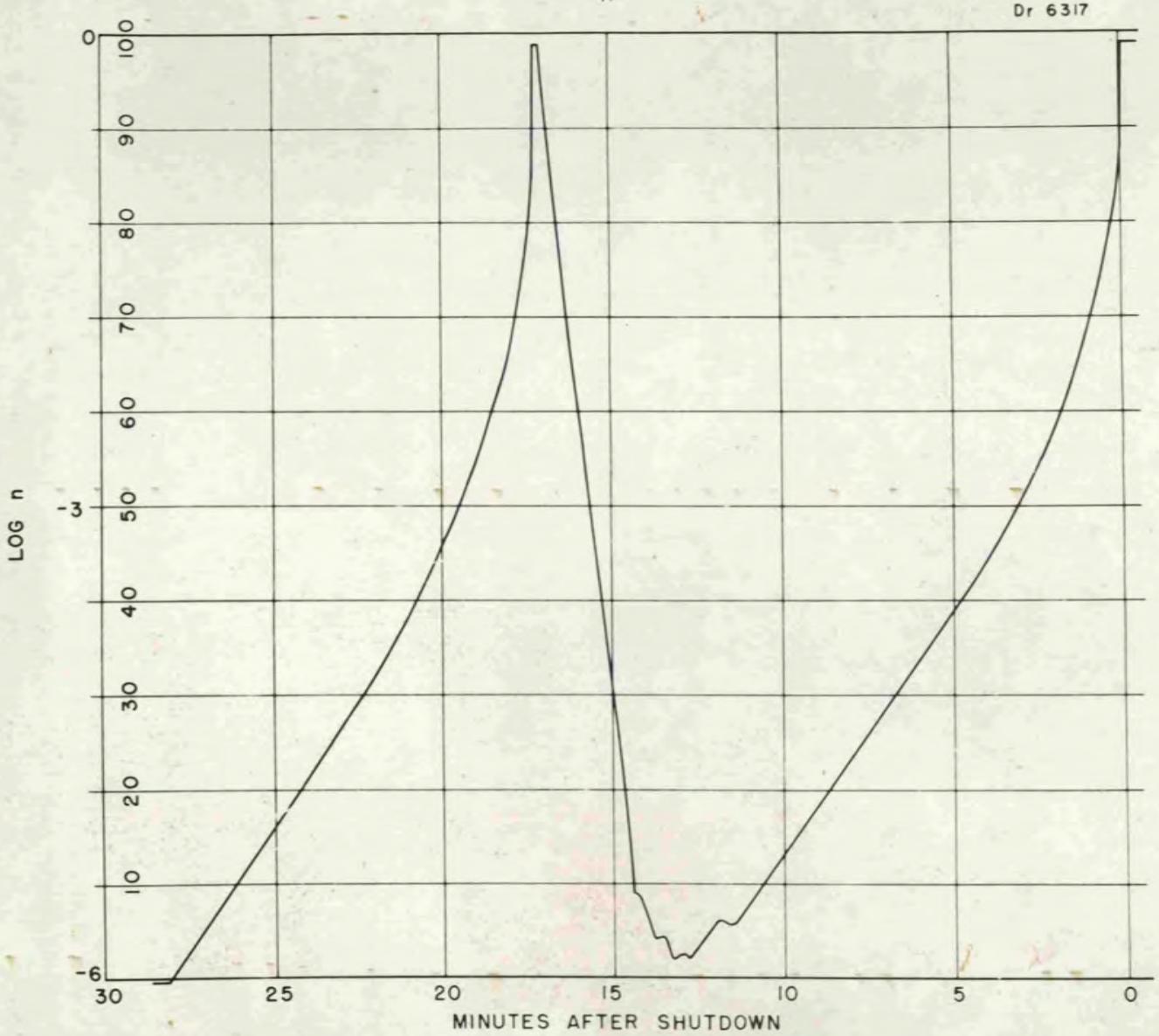

FIG. 5 TRACING FROM BROWN RECORDER CONNECTED TO MEASURE LOGARITHM OF NEUTRON FLUX WHILE PILE IS SHUTDOWN & STARTED

Dr 6318

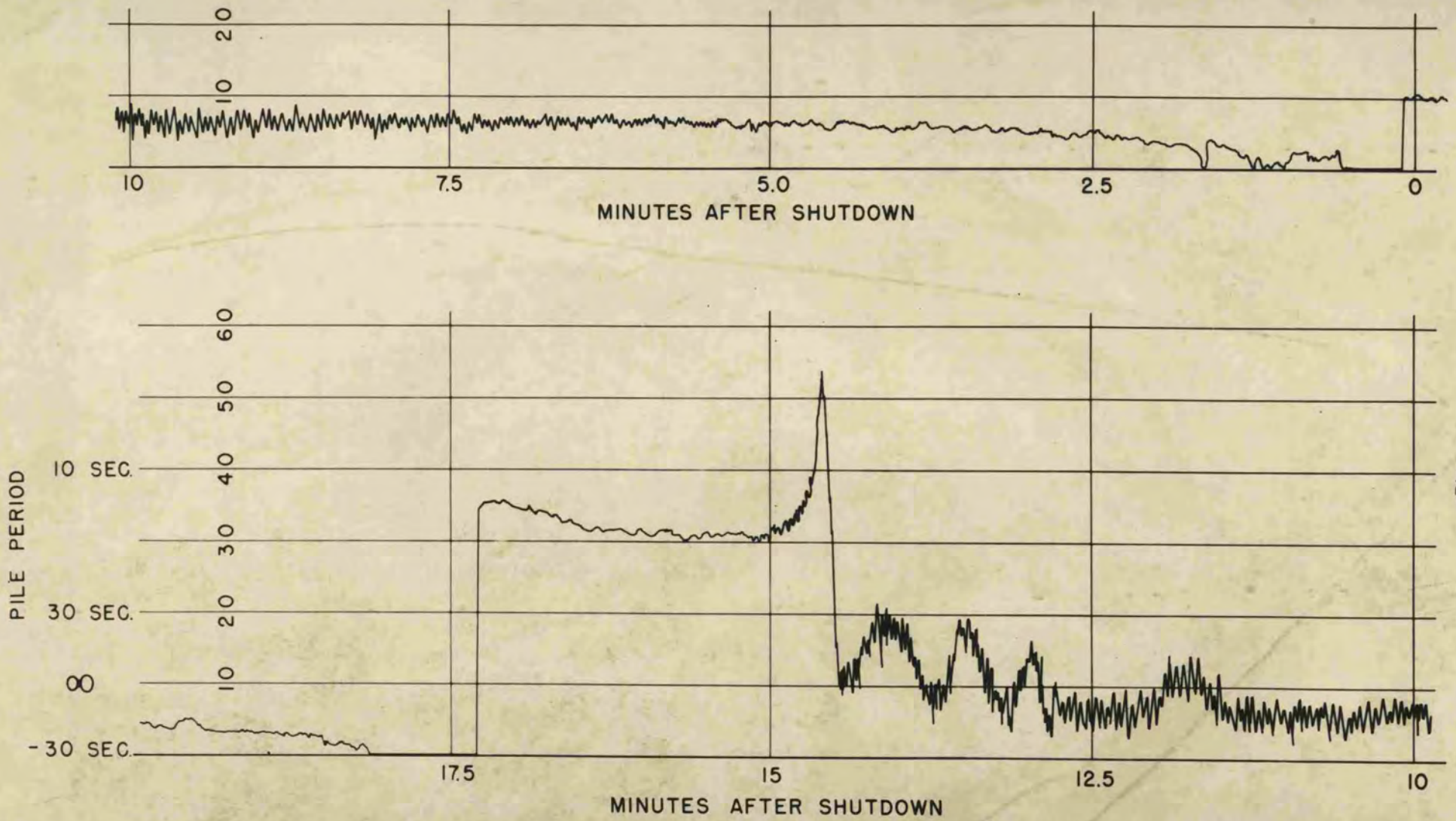

FIG. 6 TRACING FROM BROWN RECORDER CONNECTED TO MEASURE PILE PERIOD DURING SAME TIME INTERVAL AS PREVIOUS CHART