UNCLASSIFIED

ORNL 117
PHYSICS-
INSTRUMENTATION

MARTIN MARIETTA ENERGY SYSTEMS LIBRARIES
3 4456 0360293 8

INSTRUMENT DEPARTMENT
AND
CHEMISTRY DIVISION

AN INSTRUMENT FOR CONTROLLED-POTENTIAL ELECTROLYSIS

BY

R.W. LAMPHERE and L.B. ROGERS

OAK RIDGE NATIONAL LABORATORY
CENTRAL RESEARCH LIBRARY
CIRCULATION SECTION
4500N ROOM 175
LIBRARY LOAN COPY
DO NOT TRANSFER TO ANOTHER PERSON
If you wish someone else to see this report, send in name with report and the library will arrange a loan.
UCN-7969 (3 9-77)

OAK RIDGE NATIONAL LABORATORY

OPERATED BY
CARBIDE AND CARBON CHEMICALS CORPORATION
FOR THE
ATOMIC ENERGY COMMISSION
POST OFFICE BOX P
OAK RIDGE, TENNESSEE

UNCLASSIFIED

ORNL-117

This document consists 20 pages.
Copy 7 of 128 Series A.

ISSUED: Training School Library

OAK RIDGE NATIONAL LABORATORY

(Contract No. 7405 eng. 26.)

* *

Instrument Department

and

Chemistry Division

* *

AN INSTRUMENT FOR CONTROLLED-POTENTIAL ELECTROLYSIS

by

R. W. Lamphere and L. B. Rogers

* * * * * * * * * * *

August 3, 1948

Date Received: 8/16/48 Date Issued: OCT 4 1948

MARTIN MARIETTA ENERGY SYSTEMS LIBRARIES
3 4456 0360293 8

DISTRIBUTION:

1. G. T. Felbeck (M&CCC N.Y.-N.Y.)
2-4. 706-A Library
5. 706-B Library
6. Biology Library
7. Training School Library
8. Health Physics Library
9-13. Central Files
14. E. J. Murphy
15. A. M. Weinberg
16. D. C. Bardwell
17. M. D. Peterson
18. A. Hollaender
19. H. Etherington
20. W. A. Johnson
21. A. S. Householder
22. C. D. Cagle
23. C. N. Rucker
24. J. C. Stewart
25. S. R. Sapirie (AEC-Townsite)
26. H. M. Roth (AEC-Townsite)
27. AEC, Oak Ridge National Laboratory
28-35. Argonne National Laboratory
36. Armed Forces Special Weapons Project
37-38. Atomic Energy Commission, Washington
39. Battelle Memorial Institute
40-45. Brookhaven National Laboratory
46-49. Carbide & Carbon Chemicals Corporation (K-25 Area)
50-53. Carbide & Carbon Chemicals Corporation (Y-12 Area)
54. Columbia University (Dunning)
55. Columbia University (Failla)
56-59. General Electric Company
60-66. Hanford Directed Operations
67. Iowa State College
68-69. Kellex Corporation
70-72. Los Alamos
73. Massachusetts Institute of Technology
74-75. Monsanto Chemical Company, Dayton
76-77. National Bureau of Standards
78. Naval Radiological Defense Labs.
79. NEPA
80-81. New York Directed Operations
82. Patent Advisor, Washington
83-97. Technical Information Division, ORDO
98. UCLA Medical Research Laboratory (Warren)
99-103. University of California Radiation Laboratory
104-105. University of Rochester
106. Western Reserve University (Friedell)
107-128. R. W. Lamphere

Abstract

An instrument is described which will hold the cathode-solution potential to ±2 mv. over a 24 hour period. It will supply up to 18 volts and 1 ampere to the cell. It controls equally well for either increasing or decreasing potential. The cathode-solution potential may be either positive or negative with respect to the reference half-cell. Oscillograms have been recorded to illustrate rapid fluctuations in cell potential which on rare occasions may be encountered in attempting to control cathode-solution potentials.

Introduction

Chemical Aspects.

Electrodeposition is a common method for the separation and determination of many elements present in solution, because an electrolysis involves only a few simple operations, and because it can be easily carried out by remote control, the method is a very promising one for the separation of radioactive elements.

It is well known that some of the existing electrolytic procedures could be improved and many new procedures introduced by carefully selecting and regulating the cathode-solution potential. Sand[1] and his co-workers were the first investigators to carry out successful experiments. Using various metals in combination with different solutions of electrolytes, Sand obtained potentials from dissolution of the metals which he impressed upon a second "inert" electrode. Although the potentials were fairly constant for long periods of time, it was often difficult to obtain the desired

value without resorting to a somewhat cumbersome experimental setup. The difficulty was finally eliminated by the development of instruments for the regulation of cathode-solution potentials.

Other Instruments.

Varying degrees of automatic control of cathode-solution potential have been attained by previous workers. In 1942, Hickling[2] reported on a regulator which he designed using all-electronic control. Anode current was passed from a battery through a triode which had its grid potential controlled by the cathode-solution voltage variation from a fixed reference, via a thyratron and an intermediate vacuum tube. Although electronic in nature, the circuit was slow, taking 1 to 5 seconds to respond to an out-of-balance condition. It would control in both directions, but had poor sensitivity, and was subject to drift resulting from changes in the thyratron control characteristic.

Over the past few years, Diehl[3] and his associates have developed a regulator which gives closer (ca $\pm$10mv.) regulation, but compensates for changes only in one direction. Plating current up to 10 amperes and 20 volts is supplied from a full-wave selenium rectifier. The rectifier is fed from a variac which is turned by an amplifier-controlled motor to decrease voltage in order to limit the plating current and thereby prevent the cathode-solution potential from exceeding a preset value. Cathode-solution potential changes are amplified by a D.C. amplifier and used to actuate a relay in the motor circuit.

Lingane[4] has pointed out that in many cases control in both

directions is essential, and he has built and used a very simple regulator that will do this. Plating current is supplied to the cell through a motor-driven rheostat. The motor does not turn when the solution potential is correct, but does when the potential differs from the preset value by an amount sufficient to actuate the relay. Cathode-solution potential is in series opposition with the preset voltage on the slide wire. Differences cause current to flow in the circuit, which also contains a contact-making galvanometer which controls motor rotation. With the motor running freely, the potentiometer makes a full turn in 5 minutes. Sensitivity is about ±20 mv., with negligible drift; the probe current is several microamperes.

Heyd and Hites[5] have developed an electronic regulator which has many good features. It is electronic in nature, having fast response. It controls in both directions, and to within a millivolt over a short time. However, over 24 hours a drift of several millivolts may be expected. This regulator passes all current through vacuum tubes, and is designed to supply up to 60 milliamperes.

Specifications.

The specifications which the present instrument was designed to meet were:

1. The cathode-solution potential should be compared continuously with a reference half-cell such as a saturated calomel. A maximum of one microampere should flow through the reference electrode, the remainder passing between the anode and the cathode. The current flowing through the anode-cathode circuit will be

referred to as the "anode current" since the amount of current flowing to the reference electrode (probe) is negligible.

2. Regulation of the cathode-solution potential should be better than ±10 mv. in a 24 hour period.

3. Cathode-solution potentials from 0 to 3 volts should be attainable. The polarity of the "cathode" should be reversible to allow regulation at potentials which are positive in relation to the reference half-cell.

4. The instrument should be able to supply up to 1 ampere and 12 volts to the cell.

With the exception of special situations which will be discussed later, the performance of the regulators surpassed each requirement by a comfortable margin.

Description of the Instrument

Figure 1 is a photograph of the instrument, and Figure 2 is a schematic wiring diagram.

The plating current is obtained from storage cells and will supply up to one ampere and 18 volts. Control is within ±2 mv., and the regulator works equally well in either direction. Since a D.C. amplifier is not used, the only drift is that due to the reference batteries, and this has been found to be less than 1 mv. in 24 hours. The instrument responds immediately to any unbalance over 2 mv., with a speed such that one full turn of the current-regulating variac takes about 10 seconds. Probe current is negligible since 0.1 microampere is sufficient to initiate corrective action. Since the instrument amplifies A.C. only, it may be

turned on and used immediately without any long warmup period. It is only necessary to set the desired cathode-solution voltage on the reference slide wire. This voltage could be read accurately by a potentiometer connected between the probe and cathode.

Many of the performance studies were made using an electrolysis setup that has been described elsewhere[6]. Briefly, the "probe" lead was connected to the mercury electrode of a calomel half-cell, which in turn was connected to the solution to be electrolyzed by means of a salt bridge. The "cathode" lead was connected to the electrode whose potential with respect to the solution was to be regulated. This "cathode" was sometimes positive and sometimes negative with respect to the anode. Connection between the anode terminal of the regulator and the solution was made through a salt bridge.

The end of the salt bridge from the calomel cell should be placed close to the cathode in order to avoid measuring any of the resistance drop component of voltage across the solution. If possible, its ends should be turned upwards to avoid collection of bubbles. When bubbles accumulate at the end of, or in, the salt bridge they greatly increase its resistance, and thereby cause poor regulation.

The desired potential is set up on the slide-wire attached to the reference battery in such a direction as to oppose the cathode-solution plus calomel half-cell potential. Changes in the cathode-solution potential cause a current to flow through the converter which changes the D.C. into 60 cycle current. Note that

since the converter is driven at 60 cycles by a coil connected to line frequency, the phase of this inverted D.C. with respect to that of the line depends only on the direction of flow of the D.C. Reversal of the "probe" signal current causes a 180° phase reversal in the A.C. which leaves the converter and flows through the input coupling transformer. This is amplified in the 4-stage A.C. amplifier (which is conventional unit manufactured by the Brown Instrument Co., Philadelphia, Pa., except for higher impedance input transformer and some inverse feedback between the output and second grid) and fed to one phase of the 2-phase "Brown" motor. The other phase is connected to the line. Therefore the motor will remain fixed if there is no signal, or run in a direction determined by the direction of flow of D.C. in the probe circuit.

The motor contains some velocity damping due to the zero-signal D.C. (about 16 ma.) flowing through the two 7N7 output tubes. Further damping current, up to 44 ma., is supplied by the small selenium rectifier circuit. This heavy velocity damping prevents overshooting and instability under certain conditions which will be discussed more fully later. The instrument anticipates its balance point due to capacitive coupling between anode and probe, so it slows down as the balance point is approached. This further discourages hunting, allowing the instrument to be used with full gain under all conditions. At full gain, the motor will rotate for a 2 mv. unbalance, and cathode potential will be maintained correct to ±2mv. If it is desired to use the device as a simple two-terminal regulator, the probe and anode leads may be connected together. Under these conditions a constant

potential will be maintained between anode and cathode.

One interesting point in connection with the General Radio, Type 200B variac used as a D.C. potentiometer is the smoothing effect of the carbon brush. This variac has about 500 turns, which results in 24 mv. per turn when used with a 12 volt plating battery; yet the regulator will maintain anode-cathode voltage within 5 mv., indicating that the brush, which contacts several turns at once, smooths out to a large extent the potential steps between turns.

Meter shunts are not given in the drawing. Shunts on our instrument were provided to give anode current ranges of 5, 100, 250, 500, and 1000; anode voltage ranges of 1, 10, 20 volts; and probe reference voltages of 0.1, 0.5, 1.0, and 5.0 volts. The probe voltmeter requires 50 microamperes for full scale deflection. However, a potentiometer connected between probe and cathode terminals of the regulator was used for accurate determinations.

Referring to Figure 2: S_1 and S_2 are limit switches which stop the motor if the variac brush reaches either end of the winding. If this happens, L_1 or L_2 will light. After proper adjustments have been made, the regulator may be started again by pressing the corresponding push button.

In some cases it is desired to operate the cell without interruption with cathode-solution potential such that a reversal of anode-cathode potential is called for at some time during the process. Such cases can be readily handled by connecting an additional battery in series with the cell anode and the regulator.

Note that the 4000 mfd. 25 volt. electrolytic condenser shown between anode and cathode is for the purpose of reducing transients caused by variations in brush contact resistance. This is not noticeable at low current, but at high current the condenser is required.

Tests of Regulator Performance

Experimental Setup.

Tests were made with various chemical solutions to determine how closely the regulator could maintain the cathode-solution potential. The type of cell used in all these tests consisted of a piece of 25 mm. I.D. glass tubing about 8 cms. long pressed down tightly on a sheet of platinum which served as the cathode. The resulting cathode surface area exposed to the solution was 5 cm^2. The thin metal cathode was backed up by a thick piece of smooth brass, with a sheet of insulation between, and the glass tube held down tightly by means of a clamp. The solution to be electrolyzed was poured into the tube. A glass stirring rod driven at about 300 rpm extended vertically down into the solution almost to the cathode. For the low current tests, below 20 ma., a platinum anode was connected to the solution through a salt bridge. For the higher current tests, a piece of 1 mm. diameter platinum wire about 4 cms. long dipped directly into the solution served as anode. Two salt-bridge probes were used, each connected to a separate saturated calomel half-cell. The electrode of one calomel cell was connected to the regulator, and the measuring instruments were connected between the other calomel cell electrode and the cathode.

A plating battery of 12 V. was connected across the variac-potentiometer.

Three instruments were used:

1. A potentiometer capable of measuring steady D.C. potentials to 0.5 mv. This was used to detect drift. No drift was ever detected except on overnight tests and then it was always within a millivolt.

2. A Brush, Type BL211, A.C. amplifier and recording oscillograph. This device had a constant input impedance of 10 megohms resistance. It could record accurately variations over a frequency range from 0.2 to 100 cps. with a sensitivity of up to 1 mm. of chart deflection per mv.

3. A Dumont, Type 206B, cathode-ray oscilloscope. It had an input impedance of 2 megohms resistance and 30 mmfds shunt capacity; and would respond faithfully over a frequency range from 2 to 100,000 cps. It was always used at full gain, where the sensitivity was ca 2 mm. per mv. This instrument was used to observe visually any erratic variations in cathode-solution potential, particularly above 100 cps. where the recording oscillograph was ineffective.

Results.

In the vast majority of cases, the regulation was excellent. For cathode-solution potentials between +1.5 and -1.5 volts, and for currents ranging from 0.1 to 500 ma., control was often better than ± 2 mv. A typical oscillogram is shown in Figure 3a, and the conditions are listed in Table I.

Regulation was slightly affected by changing from an external "anode" (resistance of salt bridge was approximately 2000 ohms) to an internal anode. With the internal anode regulation to ca ±6 mv. was obtained. The reason for the wider variation lies in the fact that the current-carrying potentiometer (type 200B variac) has a finite number of turns, and as stated previously, introduces discontinuities of about 5 mv. when connected to a 12 volt plating battery. When a high resistance such as a salt bridge is in the anode circuit, the fraction of the discontinuity which appears between the "cathode" and probe is appreciably smaller than when an internal anode is used.

The regulator was helpful in decreasing the magnitude of slow changes in potential that resulted from stirring the solution. A comparison of Figure 3B and 3C also shows that the fluctuations were directly the effect of stirring. That was generally found to be the case, except for tantalum electrodes which will be discussed later. Note that for all oscillograms, time increases towards the right, and upward deflection indicates a change towards more positive cathode-solution potential.

Figure 4 illustrates a series of experiments starting at a slightly negative potential, where the anode current and cathode-solution potential fluctuations were very small. Upon making the cathode more negative, a region covering about 0.5 volt was found where regulation was very poor. At still more negative potentials regulation was regained. The oscillograms shown in Figure 4 were taken in stirred solutions with the regulator off. Changes in

potential were too rapid to allow any effective control by the instrument. In addition to the general trend of the pattern illustrated by Figure 4, it is interesting to note that the direction of the initial change is reversed in going from 4D to 4E. Furthermore, the fluctuations become quite regular in size and in periodicity. In going from 4E to 4F, the individual peaks became larger but the time interval between peaks became longer.

Figure 5 presents similar evidence in which the polarity of the "cathode" was changed to positive. A region of instability was found, but the fluctuations were very much smaller.

The importance of the past history of the electrode has been demonstrated very clearly. In several experiments, the potential on a platinum electrode in contact with a solution of cyanide was very steady for several hours. Generally, however, the sharp fluctuations began to appear about 30 minutes after electrolysis began, but on several occasions they appeared almost immediately.

Experiments with tantalum confirmed the importance of the electrode history. Oscillograms with a new cathode at a particular potential could be gravely affected by a momentary reversal of "cathode" polarity, by scratching the electrode surface, or by approaching the potential from a different direction. The speed and periodicity of the fluctuations were very marked, and characteristically different from those obtained with platinum and cyanide. Using the cathode-ray oscilloscope, uniform periodic fluctuations of 2 to 10 mv. amplitude and 100 to 1000 cycles per second were

often observed in addition to those that could be detected by the recorder. At any specific potential the frequency both increased and decreased, although sometimes remaining fairly constant for intervals of several seconds.

The behavior of tantalum was also unusual in that it was possible to attain very large positive cathode-solution potentials (up to 6 volts) without passing anode currents greater than 0.5 ma. After scratching the surface of the electrode with a glass rod, the current increased more than tenfold, but the fluctuations in potential increased only about 50%. However, it was still possible to reach unusually high potentials. At negative cathode-solution potentials, the tantalum behaved normally, and a maximum potential of -1.5 volts was reached. It seems probable therefore, that the high oxygen overvoltage was due to the presence of a non-conducting coating of oxide on the tantalum surface.

The oscillograms in Figure 6 are typical of the type encountered with tantalum and were obtained within a few minutes of one another in the same order in which they appear in the figure. Between 6D and 6E, the cathode-probe potential was made more negative in steps of one volt. Conditions were very steady between +3.0 and -1.0. At -1.1 the potential reached its maximum instability on the negative side, but the variations were tiny compared to those found on the positive side.

In addition to the variations encountered at low anode currents, some were found with anode current of the order of 0.5 ampere. The fluctuations shown in Figure 7 were traced to the high current density

and the rapid evolution of bubbles at the comparatively small anode (4 cms. of 1 mm. diameter platinum wire). The magnitude of the fluctuations decreased rapidly as the anode current was reduced below 0.5 ampere. Upon raising the wire anode slowly out of the solution, the current remained essentially unchanged, but the fluctuations grew larger. When only about 2 mm. of the wire anode dipped into the solution, the fluctuations resembled those shown in Figure 7.

From the data presented above, it appears that there are two, possibly three, phenomena leading to fluctuations in the "cathode"-solution potential. In the experiments involving a platinum electrode in contact with a solution of cyanide, the greatest fluctuations in potential occurred in a region just prior to the vigorous evolution of hydrogen. One can imagine the formation of uniform gas film having a high electrical resistance over the surface of the electrode. Breaking of the film to form a bubble of gas would leave bare surface, lowering the resistance and allowing more hydrogen to be formed. In a stirred solution the bubbles would be liberated less regularly but more frequently. Oscillograms obtained by the authors nearly always confirmed that expectation.

Some of the fluctuations encountered in working with tantalum also appeared to be due to bubbles. (The amazing periodicity of the oscillograph peaks is also reminiscent of the phenomenon encountered in studies of passivity.) On several occasions after the surface had been covered with many bubbles of assorted sizes,

the fluctuations occurring at moderately positive potentials could be eliminated entirely by tapping the cathode support sharply. At first a very large peak on the oscillogram coincided with each tap, but the surges grew smaller and finally disappeared after several minutes of tapping. After the fluctuations had disappeared, many bubbles were still visible on the surface.

In plating copper, the fluctuations in potential which were obtained when currents greater than 0.5 ampere were flowing can be explained by variations in the high resistance of the gas film and layer of bubbles around the anode. By placing the stirrer closer to the anode (and farther from the cathode), fluctuations were very much reduced in magnitude.

Once with the platinum-cyanide system, and twice with the tantalum-perchlorate system, a distinct maximum was discovered in the anode current upon increasing the cathode-solution potential manually, and waiting about two minutes at each potential before taking readings. The maximum was not detectable when the potentials were changed in the opposite direction. The data shown in Table II are typical, and were repeated three times in succession without difficulty. After the electrolysis had proceeded for about 30 minutes, the maximum disappeared. It seems likely, therefore, that the increased instability of potential which sometimes occurred upon using a regulator may have been due to corrective action of the slide wire in the wrong direction as a result of the anomalous relationship between changes of potential and current.

The oscillograms presented in this paper indicate that there

may often be very large fluctuations in the cathode-solution potential which would be underestimated or completely overlooked if an ordinary voltmeter were employed. In the case of a potentiometer, the galvanometer would show erratic excursions in both directions from the balance position, but would give little indication of the true magnitude or frequency of the voltage fluctuations because of inertia of its pointers. In every case where the regulator was used the average value of the cathode-probe potential remained constant and equal to the regulator setting, and the fluctuations that occurred were about this average value. These reasons probably explain why previous users of slow regulators have not reported these fluctuations in more detail. It is possible that a fast regulator such as one described by Heyd and Hites[5] would be able to eliminate the rapid as well as the slow fluctuations in cathode-solution potentials.

Acknowledgements

The authors wish to thank C. B. Pickle for providing the basic design of the instrument, and D. B. Ehrlinger and J. C. Griess for carrying out many of the preliminary tests.

Bibliography

1. H. J. S. Sand, "Electrochemistry and Electrochemical Analysis", Vol. II, Blackie and Sons, Ltd., London, 1945.
2. A. Hickling, Trans. Faraday Soc., 38, 27 (1942).
3. H. Diehl, "Electrochemical Analysis with Graded Cathode Potential Control", G. Frederick Smith Chemical Co., Columbus, Ohio, 1948.
4. J. J. Lingane, Ind. Eng. Chem., Anal. Ed., 17, 332 (1945).
5. J. W. Heyd and C. E. Hites, "Four-Unit Research Plating Control", Laboratory Report of Monsanto Chemical Co., Dayton, Ohio, October 1946.
6. J. C. Griess and L. B. Rogers, ORNL-91, July 1948.

TABLE I

EXPERIMENTAL DETAIL FOR OSCILLOGRAMS

Number	Solution	Cathode	Stirring	V_{CP}	V_{AC}	I_A	Total Swing Mv.	REMARKS*
	0.1M NaCN							
3A	1.0M NaOH	Pt	Yes	-1.300	4.4	1.1	1.5	Regulator on. Good Control.
3B	0.1M KCN	Pt	Yes	- .760	3.5	.40	17.	Regulator on. Poor Control.
3C	0.1M KCN	Pt	Yes; No	- .760	3.5	.4; .1	28.	Stirrer started and stopped.
	0.1M NaCN							
4A	1.0M NaOH	Pt	Yes	- .500	2.2	.10	3.	Beginning of variations.
4B	"	Pt	Yes	- .700	2.6	.20	7.	Regulator on. Approximately 1 3/4 cps. Irregular.
4C	"	Pt	Yes	- .700	2.6	.20	15.	Approximately 1 cps. Irregular.
4D	"	Pt	Yes	- .900	2.9	.23	40.	Spasmodic 1 cycle variations 3 to 7 secs. apart.
4E	"	Pt	Yes	-1.000	3.1	.35	180.	Spasmodic 1 cycle variations 22 secs. apart.
4F	"	Pt	Yes	-1.100	3.3	.38	320.	Spasmodic variations about 63 secs. apart.
4G	"	Pt	Yes	-1.200	3.5	.45	5.	Approximately 1 cps.
5A	"	Pt	Yes	+ .500	-2.2	-.30	9.	About 1/2 cps.
5B	"	Pt	Yes	+ .700	-2.6	-.40	5.	About 3/4 cps.
5C	"	Pt	Yes	+ .800	-3.0	-.70	2.	Beginning of appreciable conduction.
6A	1.0M $HClO_4$	Ta	No	+5.000	-6.9	-.50	95.	Predominant sawtooth at about 300 cps. Pattern continually changing. Many frequencies up to 1 kc on CRO
6B	"	Ta	No	+6.000	-8.0	-.60	35.	Regular Pulses, 1 cps.
6C	"	Ta	No	+4.000	-5.3	-.10	16.	Regular Pulses, 1 cps.
6D	"	Ta	No	+3.000	-3.9	0	3.	Regular Pulses, 1 each 5 seconds.
6E	"	Ta	Yes	-1.100	+2.9	.50	3.	Regular Pulses, 1 each 5 seconds.
	Conc. $CuSO_4$							
7	.3M H_2SO_4	Pt	Yes	-1.100	+8.2	660.	44.	Variation highly erratic, Internal anode of Pt wire.

* Note: Regulator off in all cases except as noted.

V_{CP} = Cathode-probe potential in volts.

V_{AC} = Anode-cathode potential in volts.

I_A = Current flowing into solution from anode in ma.

TABLE II

CURRENT - VOLTAGE RELATIONSHIPS ENCOUNTERED WITH A NEW TANTALUM ELECTRODE IN CONTACT WITH 1M PERCHLORIC ACID

Setting	V_{CP}	$-I_A$	$-V_{AC}$	REMARKS
1.	0.75	<0.1 ma.	0.8	Steady Readings.
2.	1.30	<0.1	1.3	Steady Readings.
3.	1.75	<0.1	1.8	Steady Readings.
4.	2.00	0.2	2.7	Steady Readings.
5.	2.15	1.0	3.9	Steady Readings.
6.	2.30	1.2	4.1	Steady Readings.
7.	2.50	0.6	3.8	I_a and V_a initially increased, dropped suddenly, then drifted lower very slowly.
8.	2.65	0.3	3.5	Similar to #7.
9.	2.90	0.3	3.8	Similar to #7.
10.	3.10	0.4	4.2	Small increase in I_a followed by a slow drift backward.
11.	3.30	1.2	5.3	Similar to #10.
12.	3.50	2.8	7.4	Similar to #10.

ANODE CURRENT
REVERSAL
ANODE VOLTAGE
REVERSAL
MICROAMPERES
MILLIAMPERES
MILLIAMPERES
PROBE VOLTMETER
REVERSAL
REF. BATTERY
REVERSAL
PLATING BATTERY
REVERSAL
FINE
COARSE
PROBE POTENTIAL
PROBE VOLTMETER
ANODE CURRENT
ANODE VOLTMETER
MOTOR DIRECTION REVERSAL
ANODE FUSE
FUSE
ANODE
CATHODE
PROBE
PLATING BATTERY
VOLTAGE REGULATOR FOR
ELECTROPLATING CONTROL
Q-276-C
ON
OFF
OSCL-B-45074
MOTOR ACTUATION
MOTOR ACTUATION

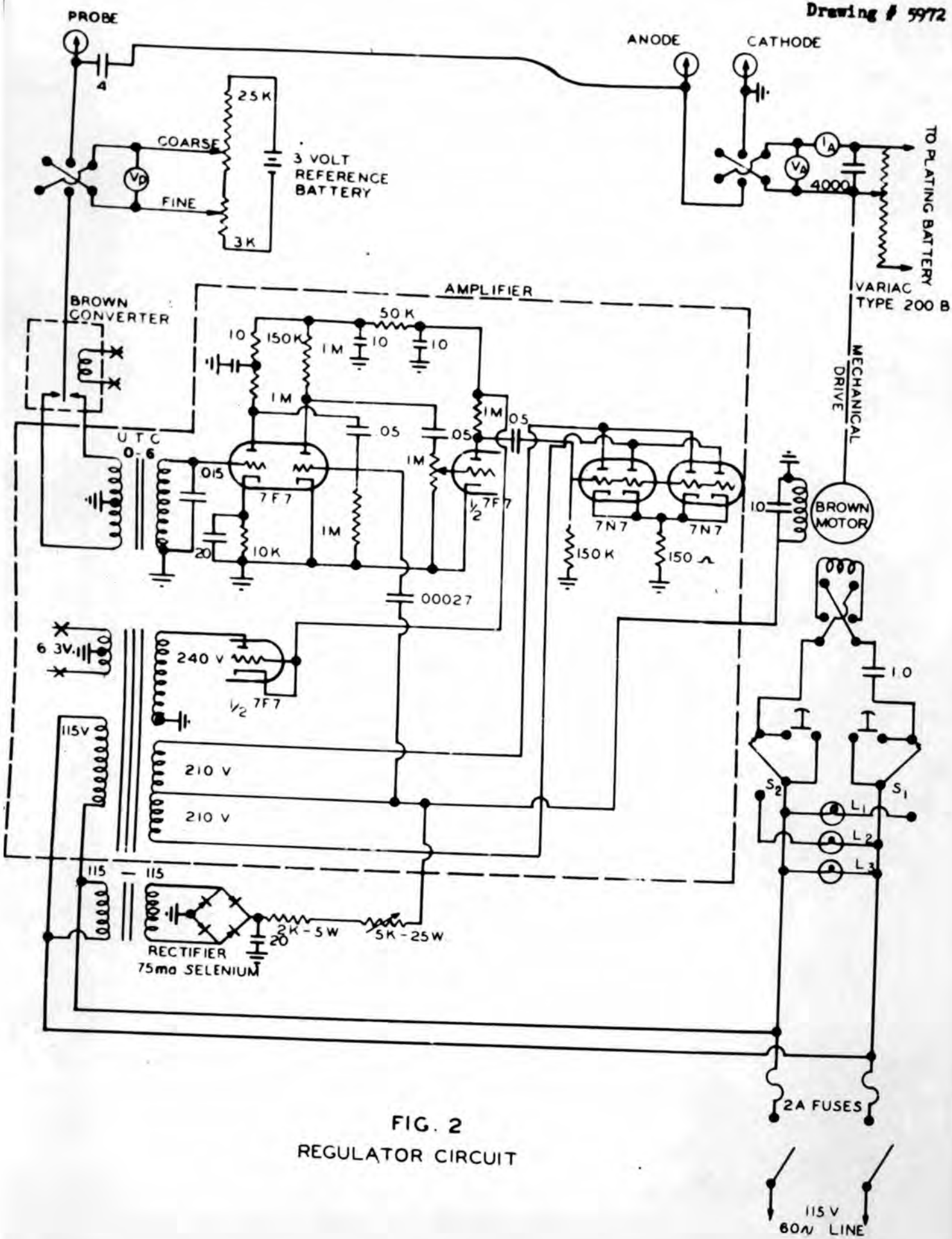

FIG. 2
REGULATOR CIRCUIT

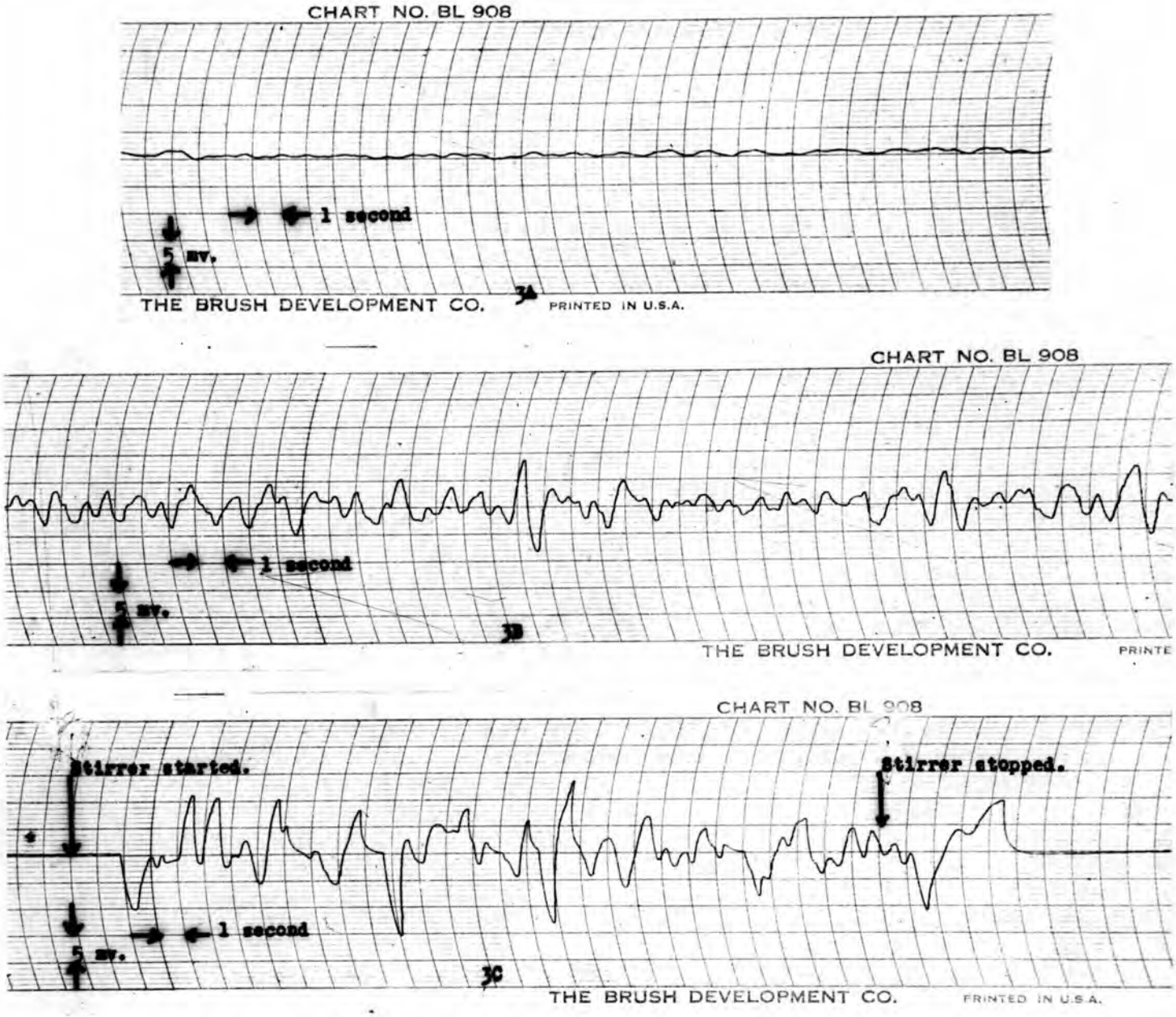

Figure 3

Records of Cathode-Solution Potential Variations
Cathode Negative

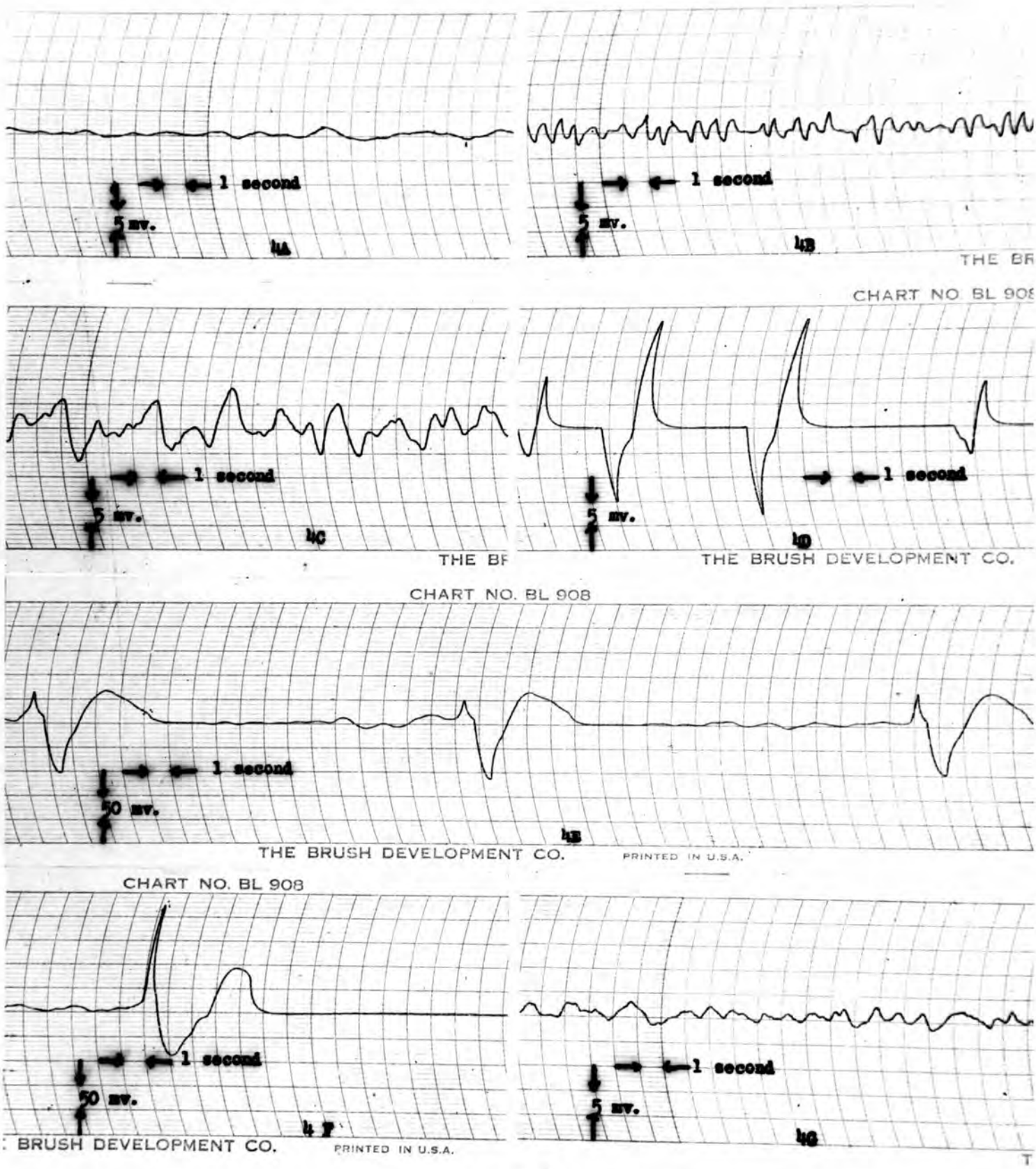

Figure 4

Records of Cathode-Solution Potential Variations
Cathode Negative

Figure 5

Cathode-Solution Potential Variations
Positive "Cathode"

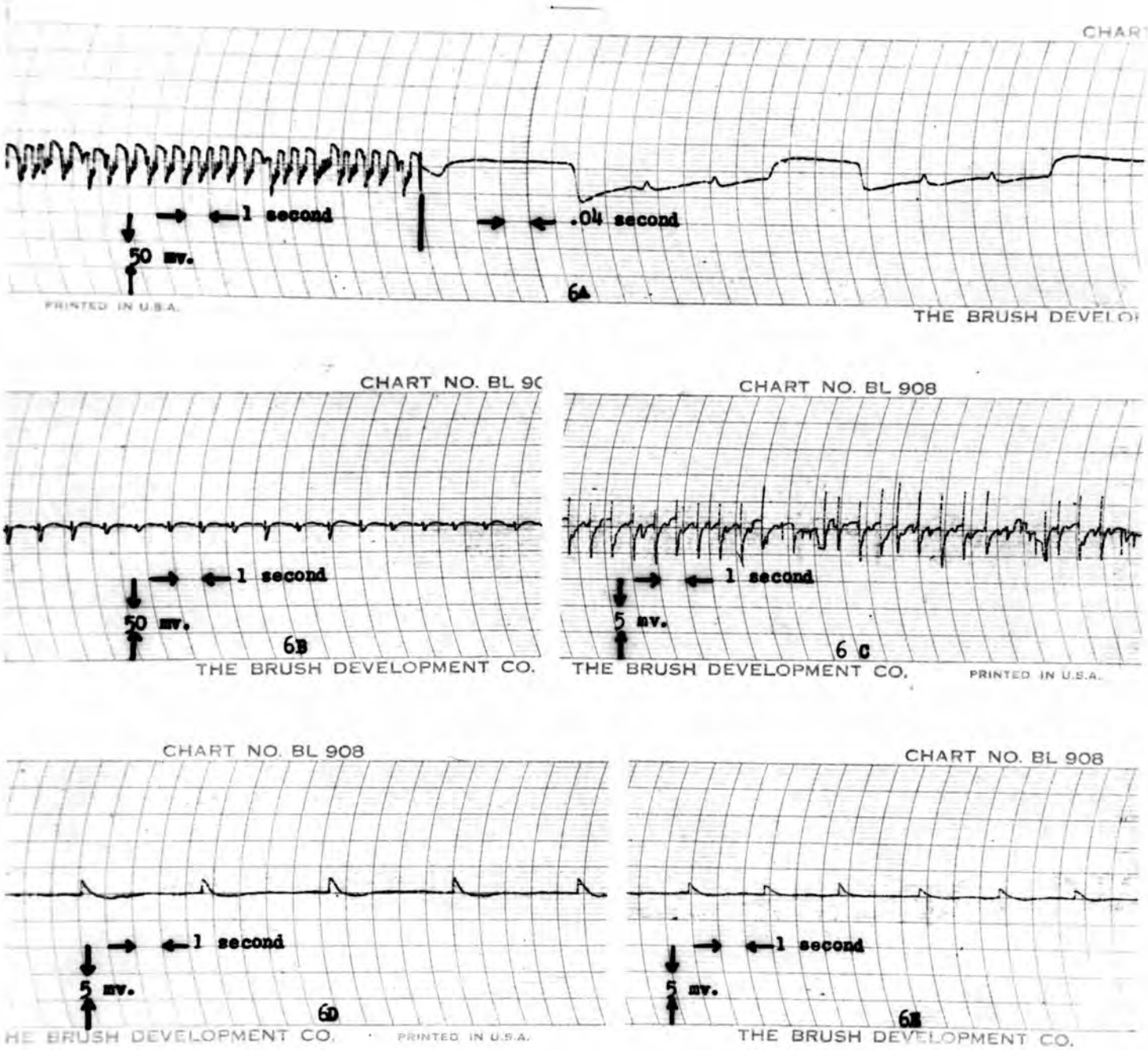

Figure 6

Variations in Cathode-Solution Potential Using a Tantalum Cathode in 1 M Perchloric Acid

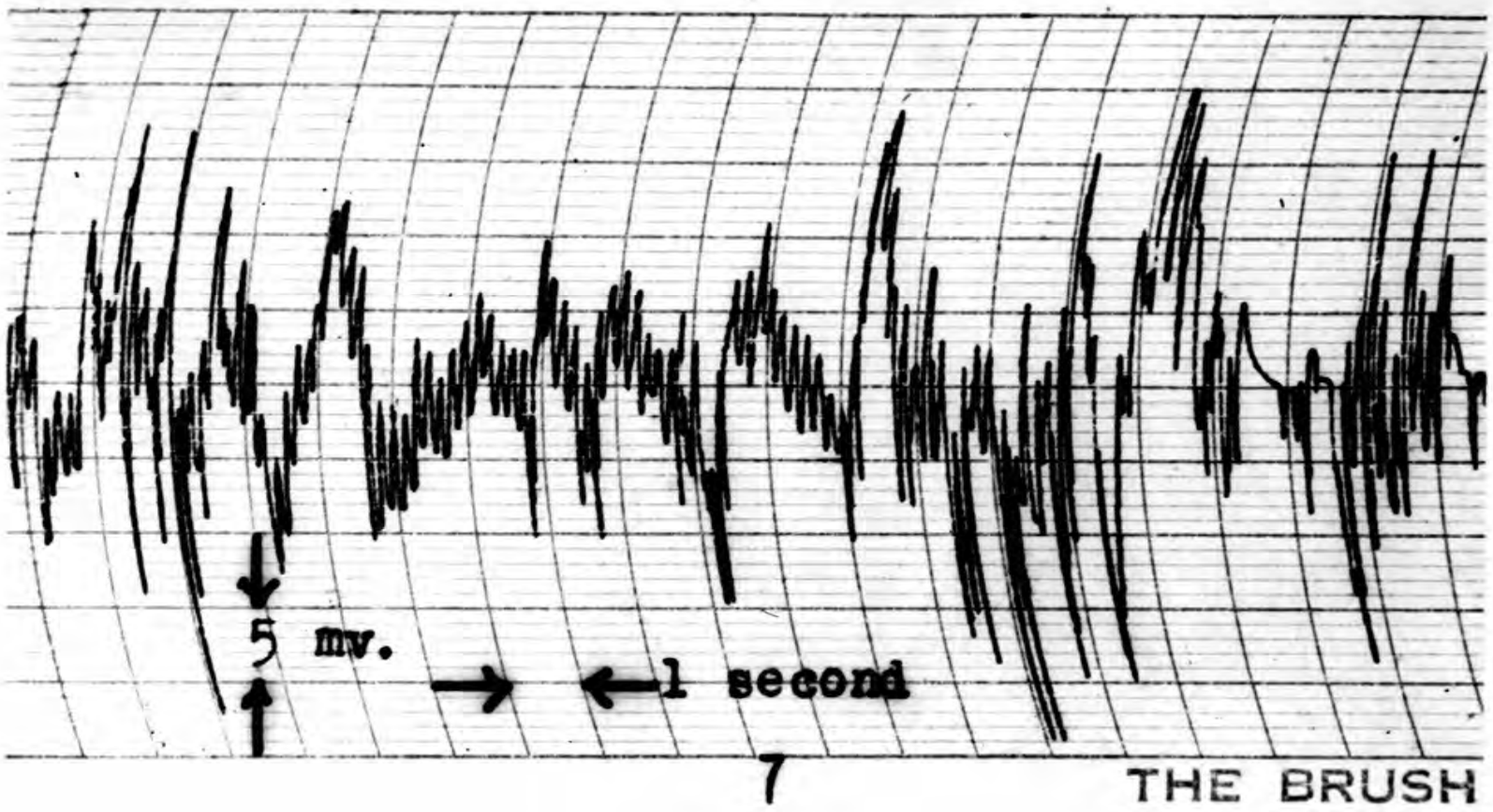

Figure 7

Cathode-Solution Potential Variations
Internal Anode and High Current