U 15

M-49-A

ORNL

Central File

DO NOT REMOVE THIS PAGE

MASTER COPY

REPORT NO. ORNL-50
This document contains 53
Pages of Text ~~and ___ Pages of Figures.~~
This is copy 13 of 82 Series A.

[redacted]

ISSUED TO: _____

THIS IS A CLASSIFIED DOCUMENT

1. This document contains information affecting the National Defense of the United States with the meaning of the Espionage Act, USC 50; 31 and 32. Transmission or revelation of its contents in any manner to an unauthorized person is prohibited by law.
2. Before this document can be read by a person other than the one to whom it is assigned, his name must be on the Library list of those authorized to read material on this subject, or permission must be obtained from the Assistant Director or the Director of the Information Department, or through an appropriate Section Chief or higher officer who must be convinced that the person needs to read the document for the success of his work.
3. This is a classified document and is to be kept only in a guarded area.
   SECRET material must be kept in a locked safe or in a locked filing case with tumbler lock.
   CONFIDENTIAL material must be kept in at least a locked filing cabinet.
4. A SECRET OR CONFIDENTIAL document is not to be copies or otherwise duplicate without permission of the originating office. Extensive notes on the content of a secret report must be taken only in a bound notebook with numbered pages having the designation SECRET. This must be safeguarded in the same way as a secret report. Other notes must be avoided but if made must be done in a form meaningless to anyone but the writer and later destroyed.
5. The person or office to whom a SECRET or CONFIDENTIAL document is issued is accountable for the document at all times. Permission for transmission to another office other than that of the assignee must be obtained through the information Office and recorded there.
6. As soon as the document is no longer needed it is to be returned to the Information Office whereupon the individual will be relieved of the responsibility for its safe-keeping.
7. The form below is to be used in routing this report and must be signed by each person who reads it.

Route to	Read by	Date	Route to	Read by	Date	Route to
	[illegible]	[illegible]				

Per Letter Instructions Of Tid-1146 E. L. Bonney

For: H. T. Drey, Supervisor Laboratory Records Dept.

DECLASSIFIED

JL 1/23/80

[redacted]

[redacted]

OAK RIDGE NATIONAL LABORATORY

Oak Ridge, Tennessee

Contract No. W-7405 - Eng. 29

Technical Division

Section II

C. E. Winters, Section Chief

CLASSIFICATION CANCELLED

DATE 6/22/79 (DOE Review Order)

DECLASSIFICATION OFFICER

OAK RIDGE NATIONAL LABORATORY

AUTHORITY DELEGATED BY ERDA 8-15-77

* * * * * * * * * * * *

HIGH FLUX REACTOR FUEL ASSEMBLIES

VIBRATION AND WATER FLOW

Problem Assignment No. TX5-12

W. R. Stromquist
and
Conner Sisman

May 1948

Date Received: June 4, 1948 Date Issued: June 15, 1948

[redacted]

[redacted]

ORNL-50
Reactor

DISTRIBUTION:

1. G. T. Felbeck
2. 706-A
3. [redacted]
4. [redacted] Library
5. [redacted] School
6. [redacted] Files
7. [redacted] Files
8. [redacted] Files
9. [redacted] Files
10. [redacted] Files
11. [redacted] urphy
12. [redacted] einberg
13. [redacted] aylor
14. [redacted] elton
15. [redacted] terson
16. [redacted] ohnson
17. [redacted] aender
18. [redacted] rington
19. [redacted] uffman
20. [redacted] eid
21. W. K. Stromquist
22. O. Sisman
23. J. A. Kyger
24. C. E. Winters
25. [redacted]
26. [redacted]
27. [redacted]
28. [redacted]
29. [redacted]
30. AEC, Oak Ridge National Laboratories
31-38. Argonne National Laboratory
39-40. Atomic Energy Commission, Washington
41-46. Brookhaven National Laboratory
47-50. General Electric Company
51-55. Hanford Directed Operations
56. Iowa State College
57-59. Los Alamos
60. NEPA
61-62. New York Directed Operations
63. Patent Lawyer, Washington
64-78. Technical Information Division, ORDO
79-82. University of California, Radiation Laboratory

[redacted]

[redacted]

CONTENTS

0. Abstract

1. Purpose

2. Conclusions

3. Literature and Calculated Data

4. Experimental Equipment

5. Data and Discussion

5.1 General

5.2 Vibration

5.3 Pressure Drop

5.4 Buckling

5.5 Corrosion

References

Appendices

Tables

Figures

This document contains restricted data within the meaning of the Atomic Energy Act of 1946 and/or information affecting the National defense of the United States within the meaning of the Espionage Act, 50 U.S.C. 31 and 32 as amended. Its transmission or the revelation of its contents in any manner to an unauthorized person is prohibited and may result in severe criminal penalty.

[redacted]

[redacted]

0.0 ABSTRACT

Frequencies and amplitudes of vibration in the fuel assembly for the High Flux Reactor have been measured. The vibrations are considered to be insignificant. Pressure differences between annuli of the assembly are insufficient to cause buckling of the plates under ordinary conditions. Pressure drops through the assembly have been measured.

[redacted]

1. PURPOSE

[redacted]

A study of vibration in the fuel assembly for the High Flux Reactor was undertaken in order to determine whether the magnitude and frequency of the vibrations would be of such a nature as to affect the mechanical strength of the assembly or the operating characteristics of the reactor. The equipment built for vibration measurement was also suitable for measuring other properties of the assembly, such as the pressure drop in the fluid flowing through the assembly and the tendency of the plates to buckle because of pressure differences between the annuli. These properties therefore were investigated concurrently with the vibration study.

[redacted]

2. CONCLUSIONS

The experimental data show that the fuel assembly has adequate strength to withstand the vibration stresses. The greatest deflections observed in the plates of an assembly of current design, about 0.6 mil, correspond to stresses that are about one fourth of the yield strength, and deflections in other parts of the assembly correspond to even lower stresses. Two endurance tests lasting over 900 and 1400 hours, respectively, with design conditions of operation caused no failures in the assemblies indicating resistance to the combined effects of corrosion and fatigue well beyond the expected 500-hour use of an assembly. Frequency of the resultant vibration was independent of water velocity, with values between 100 and 200 cycles per second. A component with frequency proportional to the water velocity had a value at 30 ft/sec of about 1300 cycles per second.

The pressure drop through the assembly at 30 ft/sec water velocity, corrected for kinetic energy changes, was 28.0 psi overall and 16.2 psi across the plates. A Lower Adapter Liner, Part-3 of Drawing TD-258, increased the pressure drop 4.6 psi at 30 ft/sec. Complete data are plotted in Figure 17.

Buckling of plates can occur only under very unusual conditions, such as a combination of improper plate spacing, insufficient restraint of plate ends, and brazing defects. Calculations indicate that improper spacing alone can not cause pressure differences as great as those shown by static pressure tests to be necessary for buckling.

[redacted]

3. LITERATURE AND CALCULATED DATA

The literature provides a very general approach to study of vibration in the fuel assembly. Several textbooks and numerous articles in periodicals were investigated, but they were predominantly concerned with the vibrations of machinery because of the relative ease of analysis and mathematical treatment in such cases. The very large number of exciting forces in a turbulent fluid stream and the very large number of degrees of freedom in the assembly make it appear unlikely that a mathematical solution or correspondingly simple experimental correlation of vibration in the assembly can be found. Almost all of the useful literature data are contained in J. P. Den Hartog's Mechanical Vibrations (1).

Vibrations become significant when small forces are able to supplement one another to produce large forces causing otherwise unexpected stresses and strains. In other words significant vibrations occur when resonance conditions of some kind cause large periodic exciting forces, or when small exciting forces are in resonance with natural frequencies of a vibrating body, or both. Since no large periodic exciting forces are expected in the fluid stream of the High Flux Reactor, significant vibrations are expected to occur only when there is resonance between the exciting forces and the natural frequencies of the assembly. Although the assembly has a very large number of modes of vibration, all but a few may be rendered insignificant by the inherent damping effect of the material of the assembly. Some of these modes of vibration of the assembly can be

[redacted]

[redacted]

predicted roughly by mathematical analysis by considering various parts of the assembly as uniform beams, thus giving a range of frequencies to which special attention should be directed in experiments.

Three modes of vibration which may be considered as those of a uniform beam are calculated in detail in Appendix I. These modes, with their calculated frequencies, are:

(a) The whole assembly, supported in the grids, vibrating in the plane of the active plates,
282, 917, 1910, ... cycles per second;

(b) The whole assembly, supported in the grids, vibrating in the plane of the side plates,
266, 864, 1800, ... cycles per second;

(c) The fuel plates, supported by the side plates, vibrating in the plane perpendicular to the long axis of the assembly,
1815, 5030, ... cycles per second.

Stresses caused by vibration may be determined from the experimental measurements of vibration deflections by calculating the relationship between stress and deflection in the assembly. These calculations are shown in Appendix II. Taking a handbook value of 4000 psi as the yield strength of 2S dead soft aluminum, and assuming the deflection caused by uniform loading of a fixed beam, the maximum allowable mid-point deflections are:

Plate	2.65 mils
Assembly in plane of side plate	13.2 mils
Assembly in plane of fuel plate	14.0 mils

[redacted]

[redacted]

4.0 EXPERIMENTAL EQUIPMENT

The fuel assembly holder in the Vibration Test Equipment was a mock-up of one channel of the High Flux Reactor, as shown in Figure 1. The channel into which the assembly fitted was a heavy stainless steel frame with thick Lucite windows on two sides and 10 inch IPS flanges at the ends. The sockets supporting the assembly, simulating the upper and lower grids in the pile, were screwed to plates that were bolted into the flanged fittings at each end of the holder. Clearances around the assembly were adjusted by use of shims screwed against the inside of the frame and different thicknesses of gaskets under the Lucite windows. Fittings were provided in the frame and windows for attaching instruments for measuring vibration and pressure. A two-foot length of 4-inch pipe upstream from the assembly and the 10-inch pipe downstream from the assembly were proportioned so that the approach and exit velocities corresponded to those in the High Flux Reactor with an average loading of fuel assemblies.

Circulation of water through the assembly is shown in Figure 2. Water was pumped from a tank, passed through an orifice meter, through the holder with the assembly, and back to the tank. Vibrations from the pump and other machinery in the building were isolated from the holder by cushioned supports for the holder and rubber hose connections near each end of the holder.

Both vibrations and pressures within the assembly were transmitted to instruments outside the holder by interchangeable pins screwed to the plates or other parts of the assembly. Each pin was sealed by passing it

[redacted]

[redacted]

through a short length of rubber tubing cemented into a rubber diaphragm made of tire patching material, the diaphragm being secured under a thin flange screwed to the holder. The pins for pressure measurement were bored and fitted to copper tubing running to the pressure gages. The pins for vibration measurements were solid and attached to the vibrometer by a soldered joint. Figure 3 shows the location of the pins on the assembly. Pin 2 was at the mid-point of the fuel plate; pins 1 and 3 were on the center line of the active plate, each twelve inches from the mid-point; and pins 4, 5 and 6 were on the center line of the side plate, respectively, opposite the pins on the fuel plate.

Several other arrangements for sealing the pins were considered but were shown to be unsatisfactory. These included Sylphon bellows, air locks containing the measuring instruments, and close-fitting sleeves with compressed air back pressure.

After trial of several types of instruments, it was found that the vibrations to be measured would probably lie in the range of 0 to 5 mils deflection and from about 100 to several thousand cycles per second frequency. An arrangement including a Davey Vibrometer was finally selected as the principal vibration measuring device.

The Davey Vibrometer is shown diagrammatically in Figure 4. The motion of the vibrating body was transmitted through the soldered wire connection to the mechanical linkage operating a wire wound around a shaft to which was attached a mirror, causing the mirror to rock. Light from a slit illuminated by a flashlight bulb was reflected from the rocking mirror to a second mirror and then to a calibrated scale on a ground glass screen. Amplitude, but not frequency, of vibration may be observed visually.

[redacted]

[redacted]

The vibrometer was adapted to record the wave form of the vibration by removing the ground glass screen, and focusing the light beam by a cylindrical lens on a motor driven photgraphic film moving perpendicular to the motion of the vibrating point image of the slit. A neon bulb on a 60 cycle per second circuit flashed a time scale on the moving film. The wave recorded on the film could be analyzed for frequency and amplitude. The film drive and vibrometer were supported on separate brackets attached to the holder.

Steady-pitch sounds emitted by the assembly and audible through the holder in some cases permitted supplementary frequency measurements. An ordinary telephone receiver was connected to a Hewlett-Packard audio oscillator. The phone was held close to the holder for comparison of the two tones, and the frequency of the audio oscillator was matched with that of the assembly, so that the assembly frequency could be read from the dial of the audio oscillator. There was no way to assign the observed frequency to any particular part of the assembly.

Several other devices were tried and found to be unsuitable for the vibration measurements. A G.E. Vibration Velocity Meter, which was used first, was discarded because it did not seem to respond to high enough frequencies. Further, it was so difficult to keep in repair that no further effort was made to adapt it. A Brush Vibrometer of the piezoelectric crystal type was also tried, first connected directly to a cathode ray oscillograph and later connected to a G.E. galvanometer-type oscillograph through an amplifier. The response curve of the vibrometer was such that the amplification varied tenfold in the range of frequencies observed in the assembly, making the vibrometer unsuitable for quantitative measurements. The Brush Vibrometer did show, however, that no appreciable vibrations occurred with frequencies above about 2500 cycles per second.

[redacted]

5. DATA AND DISCUSSION

5.1 General

The assemblies tested were of two types, with general characteristics conforming to those of Drawings TD-118 and TD-271, respectively. The individual assemblies differed from the drawings in various details, most of which are indicated in Table 1, where the numbering system for the assemblies is that used by Section IV of the Technical Division. Neither of the TD-271 type assemblies had full length ribs as shown on the original drawing, and only Assembly 47 had the combs as shown in Revision 1. The side plates of Assembly 22 were 3 mm thick, and side plates of Assembly 47 were 4 mm thick. The fuel plates were 2S aluminum, containing no uranium. Assemblies similar to Drawing TD-271 will be used in the High Flux Reactor.

5.2 Vibration

Vibration data are reported for two assemblies, both of the TD-271 type. Data were gathered for other assemblies, but are not as reliable as those reported, and are not applicable to current design.

Vibration measurements were made at six points on each of the assemblies, as shown in Figure 3 and described above. Figures 5 and 6 show half size reproductions of typical vibrographs, indicating the character of the vibrations. Tables 2, 3 and 4 show the results of analysis of all the vibrographs into frequencies and amplitudes. Amplitudes from these tables are plotted in Figures 7, 8, 9 and 10, and frequencies are plotted in Figures 11 and 12. Frequencies measured by the audio oscillator method are shown in Tables 5 and 6, and are also plotted in Figures 11 and 12.

[redacted]

Mesurements made by tapping the assembly at zero water velocity (Table 4) show natural frequencies in a low range from 120 to 144 cycles per second and a high range from 680 to 960 cycles per second. The calculated values of natural frequency, as shown in Appendix I, are in very poor agreement with the measured ranges; however, the nature of the calculations is such that the discrepancy is reasonable, and the effect of the disagreement is only to indicate additional ranges for careful consideration.

Analysis of the vibrographs shows a definite component with frequency proportional to the water velocity and the audio oscillator measurements show a similar relationship. Where f is the frequency of vibration in cycles per second and V is the water velocity in feet per second, Figures 11 and 12 show the approximate relationship

$$f \cong 40\,V$$

with a dispersion of reliable values of the constant between 36 and 44. Den Hartog (ref. 1, p. 350) describes a similar linear relationship in discussion of the "Kármán vortices." He stated that the wake behind a cylindrical obstacle in a fluid stream is not regular, but contains vortices shed alternately from the two sides of the obstacle in a regular manner, and that experimental observations show the dimensionless relationship

$$\frac{fD}{V} \cong 0.22$$

where f is the frequency of shedding of the vortices (presumably a pair of vortices, one from each side, making a cycle) and D is the diameter of the cylinder. Using for D the thickness of a plate, Den Hartog's equation becomes

[redacted]

[redacted]

$$f = \frac{0.22\ V}{0.064/12}$$

$$= 41\ V$$

Although these two equations apply to different shapes the correspondence is so striking as to offer convincing evidence that the shedding of vortices from the plate ends causes an exciting force in the fluid stream with frequency proportional to the water velocity. Consequently, any natural frequency may be in resonance with this exciting force at a suitable velocity with the result that excessive amplitude may occur at that velocity. Under these conditions the amplitude may be limited only by the inherent damping effect of the material in the assembly or by restraint of the vibrating member.

In Assembly 22 the measured amplitude of fuel plate vibrations have peak values in the ranges from 24 to 30 feet per second and from 35 to 37 feet per second water velocity. If sufficient allowance is made for uncertainties of measurement and calculation, these ranges may be considered to be consistent with ranges corresponding to measured and calculated natural plate frequencies, respectively:

Velocity, ft/sec	Exciting frequency, cycles/sec	Measured natural frequency cycles/sec	Calculated natural frequency cycles/sec
24-30	900-1200	680-960	
35-37	1400		1815

In this case, then, all of the expected frequencies in the tested range are accounted for, and there is reason to believe that the measurements include the significant resonant frequencies. The absence of peaks in the measurement of plate vibrations in Assembly 47 is evidence that sufficient restraint for prevention of vibration of the plates is provided by addition of the combs, and that they are necessary for that

[redacted]

[redacted]

purpose. The low values of amplitudes measured for the plates of Assembly 47 and the side plates of both assemblies show that the assembly as a whole is stable as designed.

The greatest amplitudes of vibration measured in Assembly 47 are 1.2 mils in the fuel plate and 0.8 mil in the side plate. At 30 feet per second, the maximum fuel plate vibration is 0.7 mil at the mid-point, corresponding to a stress of 530 pounds per square inch, and the maximum amplitude at the mid-point of the side plate is 0.4 mil, corresponding to a stress of 57 pounds per square inch. The relationships between stresses and deflections in the assembly are derived in Appendix II.

5.3 Pressure Drop

Pressure drops in the fuel assembly were measured between points shown in Figures 13, 14 and 15. All data reported in the tables have been corrected for gage errors and differences of elevation.

For a typical assembly of the TD-118 type, pressure drops are shown in Table 7 and are plotted in Figure 16. Since the assembly was open at the plate ends, it was sufficient to extend pressure taps only as far as the channel outside the assembly. The excessive clearances around the assembly in the test holder caused the velocity in the end boxes to be greater than the design velocity for the same velocity through the plates, thus causing an error in the measurements of the overall pressure drop. The corrected overall drop at any velocity is estimated by adding to the measured drop across the plates, the pressure drop in the end boxes at a velocity reduced by the ratio of the actual and design cross sections of flow through the plates.

[redacted]

The special approach channel shown in Figures 14 and 15 was provided for assemblies of the TD-271 type so that the approach and exit velocities would correspond to those in the High Flux Reactor with average loading of fuel assemblies. Tabular data for these assemblies are shown in Tables 8, 9 and 10, and are plotted in Figure 17 with overall pressure drops corrected for kinetic energy changes. These corrections are derived in Appendix III.

The effect of a Lower Adapter Liner, Part -3 of Drawing TD-258 was determined by measurements on Assembly 22 with and without the liner. Comparative pressure drops are shown in Figure 17. At 30 feet per second the overall pressure drop was 28.0 pounds per square inch without the liner and 32.6 pounds per square inch with the liner, with both values corrected for kinetic energy changes.

5.4 Buckling

Buckling of a fuel plate occurred in the first assembly tested and resistance of plates to buckling was noted in all following tests, the results of which are shown in Table 1. Buckling failure was characterized by bending of the flat plates or reversal of curvature of the curved plates, so that one or more channels were almost or even completely closed through part or all of the length of the plates.

The holder in which the first assembly was mounted did not provide spacing around the assembly equal to the spaces between the plates, and failure was ascribed to pressure differences caused by different velocities in the unequal channels. Preliminary calculations indicated an effect of the proper magnitude.

 [redacted]

Later assemblies were mounted with equal spacing, but nevertheless buckling occurred. Those cases occurred at the plate ends except for one in which the brazing was defective at an intermediate section. A test was run on a TD-118 type assembly in which the thickness of the channel outside the assembly was increased until buckling occurred when the outside channel was 15.9 mm adjacent to a normal 3 mm channel. The pressure difference at these conditions was calculated to be 15 pounds per square inch.

Experiments by Allred and Savage (2) show that reversal of curvature occurs with a pressure difference of 23 pounds per square inch. Calculations (3) show that such pressure differences are not attained through friction or Bernoulli effects at any likely plate spacing. It is believed that buckling is caused by aggravation of pressure differences at the plate ends by peculiarities of the flow pattern.

Since Assembly 22 was resistant to buckling, it is considered that the addition of combs as in Assembly 47 introduces enough additional rigidity to provide a suitable margin of safety.

5.5 Corrosion

Corrosion tests as such were not a part of the vibration studies, but certain observations of corrosion effects during the endurance tests are of interest. In all of the endurance tests except part of the last test filtered water at temperatures from 85° to 100° F was circulated through the assemblies. After 266 hours of the last endurance test (Assembly 47) demineralized water at temperatures from 115° to 130° F was circulated.

In the tests where filtered water was used there were no marked

[redacted]

[redacted]

corrosion effects on surfaces adjacent to the flowing water, but there was considerable accumulation of corrosion products on surfaces in contact with the stainless steel mounting. Corrosion products from the upper adapter accumulated under the bevelled ring and spring and "froze" them in place. Corrosion products on the lower adapter made removal of the assembly very difficult, requiring a force roughly estimated between 100 and 200 pounds. In one set of adapters fabricated from a copper-bearing aluminum alloy eruption of corrosion products formed in pits displaced the adjacent metal above the normal surface of the adapter.

The endurance tests in which demineralized water was used showed much less corrosion effect. Although a film formed on the outer surfaces of the adapters and froze the bevelled ring it was relatively easy to free it and there was no large collection of corrosion products.

[redacted]

[redacted]

REFERENCES

1. Den Hartog, J. P., "Mechanical Vibrations," McGraw-Hill, New York, 1940

2. Memorandum, R. B. Briggs to M. C. Leverett, December 19, 1947, Subject: Technical Division Section II, Report for Period Ending 12-15-47, Central Files Number 48-1-28, pages 1-4.

3. Memorandum, W. K. Stromquist to R. B. Briggs, October 9, 1947, Subject: Pressure Differences between Unequal Annuli in Multi-plate Assembly, Central Files Number 47-10-453.

[redacted]

[redacted]

APPENDIX I

Natural Frequencies of Vibration in Assembly

Reference: "Mechanical Vibrations," Den Hartog, p. 431

Assembly as a Whole, Supported between Grids.

The assembly is considered as a "clamped-hinged" beam, for which the frequencies are given by the formula

$$f = \frac{a_n}{2\pi} \sqrt{\frac{E\,I\,g}{w\,l^4}}$$

in which

f = frequency of vibration for mode n, cycles/sec

a_n = constant depending on type of restraint and mode of vibration

E = modulus of elasticity, psi

I = moment of inertia of beam section, $(in)^4$

g = acceleration of gravity, $in/(sec)^2$

w = weight per unit length, lb/in

l = length of beam, in

Constants are evaluated as follows:

a_n = 15.4, 50, 104, ...

E = 10,000,000 psi

I_x = 3.45 $(in)^4$ (X-axis parallel to fuel plates)

I_y = 3.89 $(in)^4$ (Y-axis perpendicular to fuel plates)

g = 32.2(12) = 386 $in/(sec)^2$

w = 0.0975 $lb/(in)^3$ x 4.10 $(in)^2$ = 0.400 lb/in

l = 41 in

The values of I and w were computed from dimensions of the cross section of the assembly.

[redacted]

[redacted]

Substituting in the formula,

$$f = \frac{15.4}{2\pi}\sqrt{\frac{10,000,000 \quad (386) \quad (3.45)}{0.400 \quad (41)^4}}$$

$$= 266 \text{ cycles/sec}$$

Similarly,

$$f_x = 266,\ 864,\ 1800,\ \ldots \text{ cycles/sec}$$

$$f_y = 282,\ 917,\ 1910,\ \ldots \text{ cycles/sec}$$

<u>Fuel Plate, Supported between Side Plates.</u>

The plate is considered as a "clamped-clamped" beam, with width of cross section designated as <u>b</u>. The formula given above applies, with constants as before, except

$$a_n = 22.4,\ 61.7,\ 121,\ \ldots$$

$$I = \frac{b(0.064)^3}{12} \quad (\text{in})^4$$

$$w = 0.0975\ (0.064\ b) \quad \text{lb/in}$$

$$l = 2.68 \text{ in}$$

$$f = \frac{a_n}{2\pi}\sqrt{\frac{10,000,000\ (b)\ (0.064)^3\ (386)}{12\ (0.0975)\ (0.064)\ (b)\ (2.68)^4}}$$

$$= 81.4\ a_n$$

$$f = 1815,\ 5030,\ \ldots \text{ cycles/sec}$$

[redacted]

[redacted]

APPENDIX II

Stresses and Deflections in Assembly

Reference: "Handbook of Engineering Fundamentals," Eshbach, Section 5, p. 21-27

In order to derive relationships between stress and deflection in the assembly, appropriate parts of the assembly are assumed to be beams of uniform cross section. Since conditions of loading and restraint are not known exactly, they are assumed to be equivalent to those of a fixed beam with uniform loading. It can be shown that these conditions result in greater stress per unit deflection than any other simple type of loading and restraint, so that the assumption is conservative. Formulas for these conditions are:

$$s = \frac{Mc}{I}$$

$$y = \frac{W l^3}{384 E I}$$

$$M = \frac{W l}{12}$$

where s = maximum fiber stress psi.

y = deflection at mid-point of span, in

E = modulus of elasticity, psi

c = distance of most remote fiber from neutral surface, in

l = unsupported length of beam, in

M = bending moment, lb-in

I = moment of inertia of section with respect to its neutral axis, $(in)^4$

W = total uniform load, lb

[redacted]

[redacted]

Hence $\frac{s}{y} = \frac{W\,l\,c}{12\,I} \cdot \frac{384\,E\,I}{W\,l^3} = \frac{32\,E\,c}{l^2}$

For a fuel plate, approximately,

$E = 10{,}000{,}000$ psi (2S-0 aluminum)

$c = 0.064/2 = 0.032$ in

$l = 2.6$ in

$$\frac{s}{y} = \frac{32(10{,}000{,}000)\,(0.032)}{(2.6)^2} = 1{,}510{,}000\ \frac{\text{lb/sq in}}{\text{in}}$$

or $\frac{s}{y} = 1{,}510\ \frac{\text{lb/sq in}}{\text{mil}}$

Where allowable stress is 4000 psi

$$y = \frac{s}{1510} = \frac{4000}{1510} = 2.65 \text{ mils}$$

Allowable total amplitude of vibration is 2y or 5.3 mils

For the complete assembly, approximately,

$c_x = 3.17/2 = 1.59$ in (in plane of side plates)

$c_y = 3.00/2 = 1.50$ in (in plane of active plates)

$l = 41$ in

By calculation similar to that above it is seen that, in the plane of the side plates,

$\frac{s}{y} = 302\ \frac{\text{lb/sq in}}{\text{mil}}$

allowable y = 13.2 mils

Allowable total amplitude = 26.5 mils
and in the plane of the fuel plates

$\frac{s}{y} = 285\ \frac{\text{lb/sq in}}{\text{mil}}$

allowable y = 14.0 mils

allowable total amplitude = 28.0 mils

[redacted]

[redacted]

APPENDIX III

Kinetic Energy Changes in Assemblies

		Assembly 22	Assembly 47
Cross sections, sq in			
Holder		6.36	6.07
Approach channel	4 in IPS	12.73	12.73
Exit channel	10 in IPS	80.69	80.69
Velocities, ft/sec			
Holder		V_h	V_h
Approach channel	$\frac{6.36}{12.73} V_h$	$0.500\ V_h$	$0.476\ V_h$
Exit channel	$\frac{6.36}{80.69} V_h$	$0.079\ V_h$	$0.075\ V_h$
Kinetic energies, ft head			
Holder	$\frac{V_h^2}{2g}$	$0.01555\ V_h^2$	$0.01555 V_h^2$
Approach channel	$\frac{(0.500\ V_h)^2}{2g}$	$0.00389\ V_h^2$	$0.00353\ V_h^2$
Exit channel	$\frac{(0.079\ V_h)^2}{2g}$	$0.00010\ V_h^2$	$0.00009\ V_h^2$
Loss of kinetic energy, approach to exit		$0.00379\ V_h^2$	$0.00344\ V_h^2$
Pressure increase due to loss of K.E., lb/sq in	$0.434(0.00379\ V_h^2)$	$0.00164\ V_h^2$	$0.00149\ V_h^2$

[redacted]

[redacted]

TABLE I

TESTS OF FUEL ASSEMBLIES

Assembly No.	Drawing No.	Fuel Plates			Type of Joint	Endurance Tests		
		No.	Thickness	Shape		Start	Duration	Remarks
--	TD-118	18	1.0 mm	curved	Torch brazed	(1947) Jan. 10	45 min.	Plates buckled
--	TD-118	18	1.0	flat	Soldered	Feb. 5	5 hours	Joints failed and plates buckled
1	TD-118	18	1.0	curved	Furnace brazed	Feb. 19	8 hours	New holder installed
IV	TD-118	12	1.5	curved	"	Mar. 3	533 hours	Endurance test ended to run buckling test
III	TD-118	12	1.5	curved	"	April 23	30 min	Joints failed and plates buckled
10	TD-118	12	1.5	curved	"	May 5	572 hours	No failure
22	TD-271	18	1.5	curved	"	Aug. 21	9[illegible] hours	No failure
47	TD-271	18	1.5	curved	"	Oct. 27	1416 hours	No failure

[redacted]

[redacted]

TABLE 2

DAVEY VIBROMETER MEASUREMENTS

ASSEMBLY 22
(Series A)

Film No.	Pin Location	Water Velocity ft/sec	Maximum Vibration Frequency Cycles/sec	Maximum Vibration Amplitude mils	Proportional-frequency Component Frequency cycles/sec	Proportional-frequency Component Amplitude mils
1	5	21.0	120	0.7	755	0.1
2	5	26.1	---	---	---	---
3	5	26.1	120	0.5	995	0.1
4	5	31.3	120	0.6	1190	0.2
5	5	36.4	120	0.8	1330	0.1
6	5	41.8	120	0.8	1560	0.1
7	6	41.8	?	0.5	1630	0.3
8	6	36.4	?	0.5	1360	0.3
9	6	31.2	?	0.5	1180	0.4
10	6	26.0	?	0.4	960	0.3
11	6	20.7	?	0.4	720	0.2
12	3	20.8	800	1.3	----	---
13	3	26.1	970	1.4	1080	0.4
14	3	28.6	540	1.5	1080	1.0
15	3	31.1	510	2.0	1070	1.0
16	3	36.4	550	1.3	1330	0.6
17	3	41.5	300	2.0	1600	0.4
18	2	41.8	430	2.4	1600	0.5
19	2	36.4	130	2.6	1370	0.6
20	2	31.2	530	1.8	1060	0.6
21	2	28.4	480	1.6	1060	0.6
22	2	26.2	300	1.5	980	1.0
23	2	20.8	750	1.2	760	0.4
24	1	20.8	740	0.8	800	0.4
25	1	26.1	500	5.6	---	---
26	1	28.5	480	3.6	1080	0.8
27	1	31.4	540	2.2	1180	0 8
28	1	36.6	380	5.0	1370	0.8
29	1	41.8	430	3.0	1570	0.6
30	4	41.8	110	0.5	1480	0.4
31	4	36.4	110	0.8	1300	0.2
32	4	31.3	1170	0.4	1170	0.4
33	4	26.1	1000	0.8	1000	0.8
34	4	21.0	780	0.3	780	0.3

[redacted]

TABLE 3

DAVEY VIBROMETER MEASUREMENTS [redacted]

ASSEMBLY 22
(Series B)

Film No.	Pin Location	Water Velocity ft/sec	Maximum Vibration Frequency Cycles/sec	Maximum Vibration Amplitude mils	Proportional-Frequency Component Frequency cycles/sec	Proportional-Frequency Component Amplitude mils
1	1	20.6	120	0.8	780	0.4
2	1	25.6	500	3.8	1000	1.0
3	1	27.9	540	6.0	1080	1.2
4	1	30.5	270	1.3	1170	0.5
5	1	32.8	550	2.6	1280	0.8
6	1	35.3	540	2.3	1370	0.8
7	1	40.5	450	2.2	1490	0.8
8	1	37.7	480	2.6	1400	0.8
9	1	34.7	550	2.2	1300	0.8
10	1	31.8	480	1.6	1180	0.6
11	1	28.3	540	2.4	1080	0.6
12	1	27.0	520	2.0	1000	0.6
13	1	23.8	400	2.2	910	0.8
14	2	20.6	---	---	800	0.2
15	2	25.6	350	1.0	1000	0.4
16	2	30.4	500	1.4	1170	0.4
17	2	28.0	420	1.4	1090	0.4
18	2	32.9	540	1.9	1280	0.5
19	2	35.3	560	2.5	1390	0.6
20	2	40.5	660	1.2	1480	0.3
21	2	37.3	500	1.1	1400	0.4
22	2	34.4	520	1.6	1290	0.5
23	2	31.5	500	1.4	1180	0.5
24	2	28.5	460	1.6	1090	0.5
25	2	23.4	400	1.0	890	0.4
26	3	20.6	---	---	790	0.4
27	3	25.6	480	2.0	990	0.5
28	3	30.5	560	2.4	1180	0.7
29	3	27.6	120	1.8	1040	0.6
30	3	33.1	380	1.4	1280	0.4
31	3	35.4	380	1.4	1380	0.5
32	3	40.4	440	1.2	1480	0.3
33	3	37.9	360	1.6	1370	0.4
34	3	34.6	350	1.6	1280	0.4
35	3	30.4	500	3.0	1180	0.8
36	3	28.9	400	1.4	1090	0.5
37	3	26.5	360	1.2	1000	0.5
38	3	23.5	500	2.2	920	1.0
39	6	20.8	---	---	800	0.2
40	6	25.6	---	---	1010	0.3

[redacted]

TABLE 3 (Con't.)

[redacted]

Film No.	Pin Location	Water Velocity ft/sec	Maximum Vibration Frequency Cycles/sec	Maximum Vibration Amplitude mils	Proportional-Frequency Component Frequency cycles/sec	Proportional-Frequency Component Amplitude mils
41	6	30.4	---	---	1190	0.3
42	6	32.8	---	---	1280	0.3
43	6	35.4	---	---	1370	0.2
44	6	40.3	---	---	1500	0.3
45	5	20.8	120	0.5	840	0.1
46	5	25.6	120	0.5	1000	0.1
47	5	30.4	120	0.5	1180	0.2
48	5	28.4	120	0.6	1080	0.1
49	5	32.8	120	0.7	1280	0.2
50	5	35.4	120	0.7	1360	0.2
51	5	40.4	120	0.5	1500	0.2
52	4	20.6	---	---	750	0.3
53	4	25.4	---	---	980	0.2
54	4	30.4	---	---	1000	0.2
55	4	32.9	320	0.8	1280	0.3
56	4	35.4	180	0.4	1360	0.1
57	4	40.4	120	0.4	1470	0.1

[redacted]

[redacted]

TABLE 4

DAVEX VIBROMETER MEASUREMENTS

ASSEMBLY 47

Film No.	Pin Location	Water Velocity ft/sec	Maximum Vibration Frequency Cycles/sec	Maximum Vibration Amplitude mils	Proportional Frequency Component Frequency cycles/sec	Proportional Frequency Component Amplitude mils
1	1	0	---	---	---	---
2	1	0	144	---	960	---
3	1	20.6	120	0.3	880	0.1
4	1	25.9	120	0.2	1060	0.1
5	1	28.5	120	0.4	1120	0.1
6	1	31.0	120	0.4	1320	0.2
7	1	33.3	120	0.4	1320	0.2
8	1	35.9	120	0.5	1340	0.2
9	1	41.2	120	0.7	1600	0.2
10	2	20.4	120	0.5	860	0.2
11	2	25.8	120	0.6	1000	0.3
12	2	28.5	120	0.7	1040	0.3
13	2	30.8	120	0.7	1240	0.3
14	2	33.2	120	0.8	1420	0.5
15	2	36.2	120	0.8	1540	0.2
16	2	41.4	120	1.2	1750	0.3
17	2	0	120	---	880	---
18	2	0	120	---	920	---
19	3	0	---	---	680	---
20	3	0	---	---	760	---
21	3	20.4	---	---	880	0.2
22	3	26.0	---	---	880	0.2
23	3	28.2	---	---	980	0.2
24	3	31.0	96	0.5	1180	0.2
25	3	33.2	100	0.6	1100	0.2
26	3	35.8	180	0.6	1500	0.2
27	3	41.3	150	1.0	1680	0.2
28	4	0	120	---	920	---
29	4	0	120	---	800	---
30	4	20.8	120	0.5	880	0.1
31	4	26.0	120	0.7	800	0.1
32	4	28.4	120	0.6	1160	0.1
33	4	30.8	120	0.5	920	0.1
34	4	33.3	120	0.7	1040	0.1
35	4	36.0	120	0.7	---	---
36	4	41.1	120	0.8	1000	0.1
37	5	20.4	120	0.3	800	0.1
38	5	25.9	120	0.5	940	0.1
39	5	28.3	120	0.3	1100	0.1
40	5	31.0	180	0.4	1200	0.1

[redacted]

[redacted]

TABLE 4 (Con't.)

Film No.	Pin Location	Water Velocity ft/sec	Maximum Vibration Frequency Cycles/sec	Maximum Vibration Amplitude mils	Proportional Frequency Component Frequency cycles/sec	Proportional Frequency Component Amplitude mils
41	5	33.4	120	0.4	1400	0.1
42	5	35.8	120	0.5	1400	0.1
43	5	41.1	120	0.7	1400	0.1
44	5	0	120	---	----	---
45	5	0	120	---	960	---
46	6	0	---	---	720	---
47	6	0	---	---	740	---
48	6	20.8	---	---	800	0.1
49	6	25.6	---	---	800	0.1
50	6	28.3	---	---	800	0.1
51	6	30.8	180	0.4	800	0.1
52	6	----	---	---	----	---
53	6	25.6	---	---	800	0.1
54	6	28.3	---	---	800	0.1
55	6	30.8	---	---	1000	0.1
56	6	33.4	180	0.2	1360	0.1
57	6	36.0	180	0.2	1200	0.1
58	6	41.1	180	0.3	----	---

[redacted]

[redacted]

TABLE 5

AUDIO OSCILLATOR MEASUREMENTS

ASSEMBLY 22

Frequency Cycles/sec	Water Velocity ft/sec
930	24.0
1005	24.8
1060	27.1
1100	27.9
1190	29.3
1290	32.2
1400	34.8
1510	37.7
1510	40.5
1400	37.2
1290	34.4
1190	31.5
1100	28.9
1000	26.7
920	24.0
840	21.8
930	23.7
1010	24.9
	27.7

Frequency Cycles/sec	Water Velocity ft/sec
1090	27.7
1180	29.3
1280	32.0
1390	34.7
1500	38.0
1500	39.6
1400	37.2
1290	34.4
1180	31.5
1100	28.9
1010	26.5

Compilation of Frequency Ranges

Frequency Cycles/sec	Water Velocity ft/sec
840	21.8 – 23.7
930	21.8 – 24.9
1010	24.0 – 27.7
1060	27.1 – 27.9
1100	26.5 – 29.3
1190	28.9 – 32.2
1290	31.5 – 34.8
1400	34.4 – 38.0
1510	37.2 – 40.5

[redacted]

[redacted]

TABLE 6

AUDIO OSCILLATOR MEASUREMENTS

ASSEMBLY 47

Random Measurements in Order of Frequency

Frequency Cycles/sec	Water Velocity ft/sec
960	22.8
960	24.3
1120	26.1
1220	27.5
1220	28.2
1220	30.0
1300	31.2
1300	33.4
1310	30.2
1320	31.2
1320	32.4
1360	31.6
1360	32.6
1400	33.3
1410	32.4
1410	33.0
1440	34.5
1480	34.4
1490	34.5
1500	35.6
1500	35.8
1510	36.4
1520	35.2
1560	37.2
1600	37.2
1600	37.6
1600	38.1
1620	39.6
1680	39.6
1700	39.6
1710	40.4
1710	40.8
1780	42.0
1790	41.3
1800	42.7
1800	43.7
1810	42.9
1890	44.0
1900	44.6

Compilation of Frequency Ranges

Frequency Cycles/sec	Water Velocity ft/sec
960	22.8 24.3
1120	26.1
1220	27.5 30.0
1310	30.2 33.3
1410	32.4 34.5
1500	34.4 36.4
1600	37.2 39.6
1700	38.6 40.8
1800	41.3 43.7
1900	44.0 44.6

[redacted]

[redacted]

TABLE 7

PRESSURE DROP IN ASSEMBLY IV (TD-118 TYPE)

Velocity Through Plates ft/sec	Corrected pressure gage readings lb/sq in. See Figure 13 for location							Pressure drops, lb/sq in.		
	1	2	3	4	5	6	7	Overall (1-7)	Through Plates (2-6)	Through 24-inch length of plates (3-5)
8.8	6½	4½	3	2½	2½	1½	0	6½	3	½
11.0	9½	7	5½	4½	4	4	2	7½	3	1½
13.3	13	10	8	6½	5½	5½	2	11	4½	2½
14.8	16	12½	10½	9	7	7½	3	13	5	3½
16.9	19	15	13	10½	8	8½	3	16	6½	5
18.4	23½	18	15½	12½	10	10½	4½	19	7½	5½
20.0	26½	21	18	14½	11	11½	5	21½	9½	7
21.2	30	23½	20½	16½	12½	13½	6	24	10	8
22.7	33½	26	22½	18½	14	15	6½	27	11	8½
23.7	37½	29	25	20½	15½	17	7	30½	12	9½
25.3	41	31½	27½	22½	16½	18	7½	33½	13½	11
26.0	44½	35	29½	24½	18	19½	8½	36	15½	11½
27.5	48	37½	32	26½	19	21	9	39	16½	13
28.4	52½	40½	35	29	21	22½	10	42½	18	14
29.6	56	43½	37	30½	22½	23½	10	46	20	14½
30.6	60	46	40	33	24	26	11	49	20	16

[redacted]

[redacted]

TABLE 8

PRESSURE DROP IN ASSEMBLY 22 (TD-271 TYPE)

Velocity Through Plates ft/sec	Corrected pressure gage readings, lb/sq in. See Fig. 14 for location							Kinetic Energy Loss Thru Assembly lb/sq in	Pressure drops, lb/sq in.		
	1	2	3	4	5	6	7		Overall Observed (1-7)	Overall, Corrected for K.E. Change	Through 24-inch Plate Length (4-6)
15.5	10	7	2	8	5	3	2	0.4	8	8½	5
15.7	10	7	2	8	5	3	2	0.4	8	8½	5
16.1	10	7	2	8	5	3	2	0.4	8	8½	5
20.7	16	10	3	11½	7	4	2½	0.7	13½	14	7½
20.7	16	10	3	12	7	4	2½	0.7	13½	14	8
21.2	16½	10½	3	12	7	4	3	0.7	13½	14	8
26.0	23	14½	4	16	9	5	3	1.1	20	21	11
26.0	23	14½	4½	17	9½	6	3	1.1	20	21	11
26.1	24	15	4½	17½	9½	5½	3	1.1	21	22	12
31.1	32	19	5½	22	12	8	4	1.6	28	29½	14
31.2	33	19½	6	23	12	7½	4	1.6	29	30½	15½
31.3	33	19½	6	23	12	7½	4	1.6	29	30½	15½
36.2	43	25	8	29½	15½	10	4½	2.1	38½	40½	19½
36.4	43½	25½	8	30½	15½	10	4½	2.2	39	41	20½
36.6	43	25	7½	29½	16	10	5	2.2	38	40	19½
41.5	55	32	9½	37	20	10½	6	2.8	49	52	26½
41.9	55	32	9½	37	20	11½	6	2.9	49	52	25½

[redacted]

TABLE 9

PRESSURE DROP IN ASSEMBLY 22 WITH LOWER ADAPTER LINER
(Part No. -3, Dwg. TD-258, in TD-271 Type Assembly) [redacted]

Velocity Through Plates ft/sec	Corrected Pressure Gage Readings, lb/sq in. See Fig. 15 for location							Kinetic Energy Loss Thru Assembly lb/sq in.	Pressure Drops, lb/sq in.			
	1	2	3	4	5	6	7		Overall, Observed (1-7)	Overall, Corrected for K.E. Change	Across Plates (2-6)	Through 24-inch Plate length (3-5)
20.0	17½	15	11½	11	6	6½	3	0.7	14½	15	8½	5½
20.8	18	15	12	11	6	7	3	0.7	15	15½	8	6
21.2	19	16	12	12	6	7	3	0.7	16	16½	9	6
25.7	27	22	17	16	8	10	3	1.1	24	25	12	9
26.0	27	22½	17	16	9	10	3	1.1	24	25	12½	8
26.1	27½	22½	17	16	9	10	3	1.1	24½	25½	12½	8
26.5	28½	24	18	17	9	10½	3	1.1	25½	26½	13½	9
31.0	37½	31	24	22	12	14	4	1.6	33½	35	17	12
31.3	38	31½	24	22	12	14	4	1.6	34	35½	17½	12
31.3	38	32	24½	22½	12	14	4	1.6	34	35½	18	12½
31.4	38½	32	24½	22½	12	14	4	1.6	34½	36	18	12½
36.2	50	41	31	29	16	18	5	2.1	45	47	23	15
36.4	50	41	32	30	16	18	5	2.2	45	47	23	16
36.6	50	41	32	30	16	18	5	2.2	45	47	23	16
36.6	51	42	32	30	16	18	5	2.2	46	48	24	16
40.0	60	49	37	35	18	21	5	2.6	55	57½	28	19
41.5	64	52	40	37	20	23	6	2.8	58	61	29	20

[redacted]

[redacted]

TABLE 10

PRESSURE DROP IN ASSEMBLY 47
(TD-271 type)

Velocity Through Plates ft/sec	Corrected pressure gage readings, lb/sq in. See Fig. 15 for location				Kinetic Energy Loss Thru Assembly lbs/sq in.	Pressure Drops, lb/sq. in.		
	1	2	6	7		Overall Observed (1-7)	Overall Corrected for K.E. Change	Across Plates (2-6)
20.4	14½	12	4	2	0.6	12½	13	8
20.8	15½	12½	4	2	0.6	13½	14	8½
25.9	23	18	6	3	1.0	20	21	12
25.9	23	18½	6	2½	1.0	20½	21½	12½
26.2	23	18½	6	3	1.0	20	21	12½
30.7	30½	24	7½	3½	1.4	27	28½	16½
30.7	31	25	7½	3	1.4	28	29½	17½
30.8	31	25	8	3	1.4	28	29½	17
35.8	40	32	10	4	1.9	36	38	22
35.8	40½	32	½	4	1.9	36½	38½	22½
36.2	41½	32½	10	4	2.0	37½	39½	22½
40.9	52	41	12	4	2.5	48	50½	29
41.0	52½	41	12	4	2.5	48½	51	29

[redacted]

[redacted]

Drawing # 5775

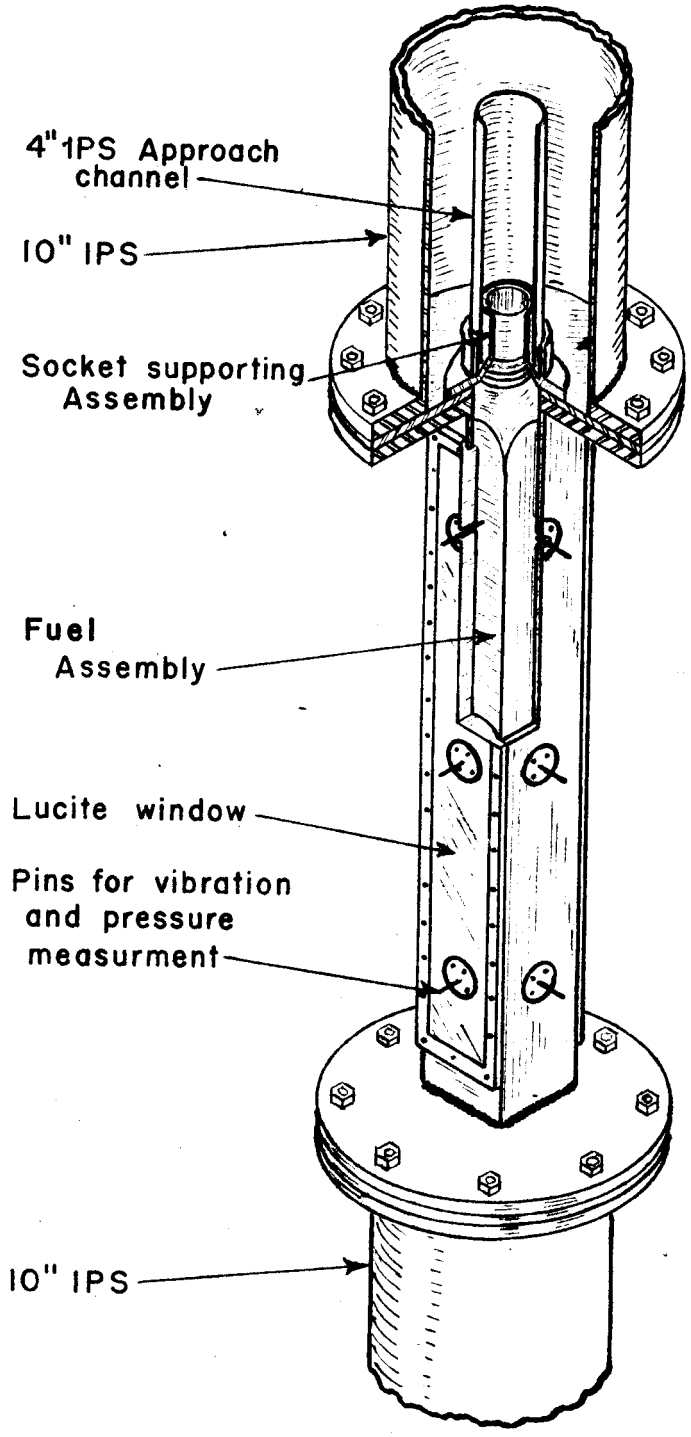

Figure 1 —— Fuel Assembly Holder

[redacted]

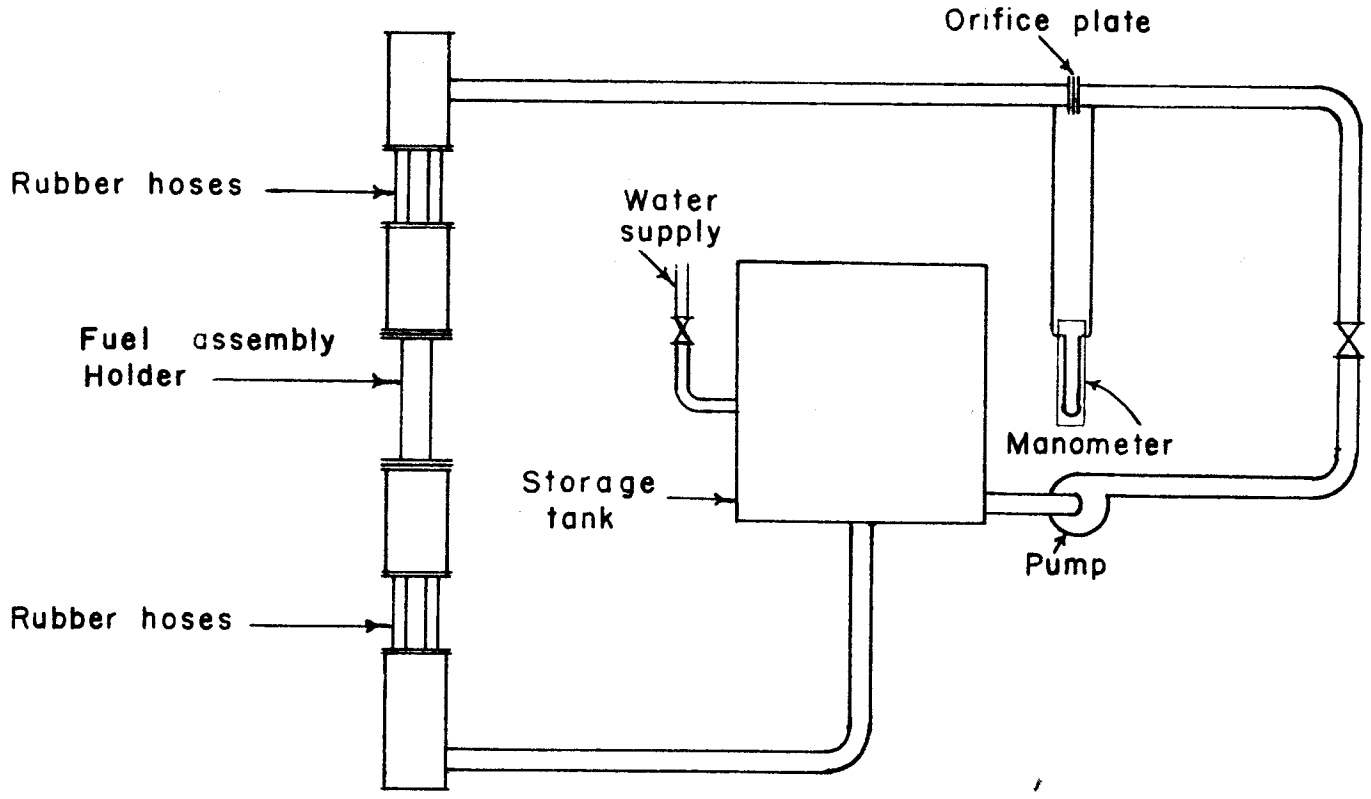

Figure 2 — Flow Diagram of Vibration Test Equipment

Drawing # 5746

[redacted]

Drawing # 5247

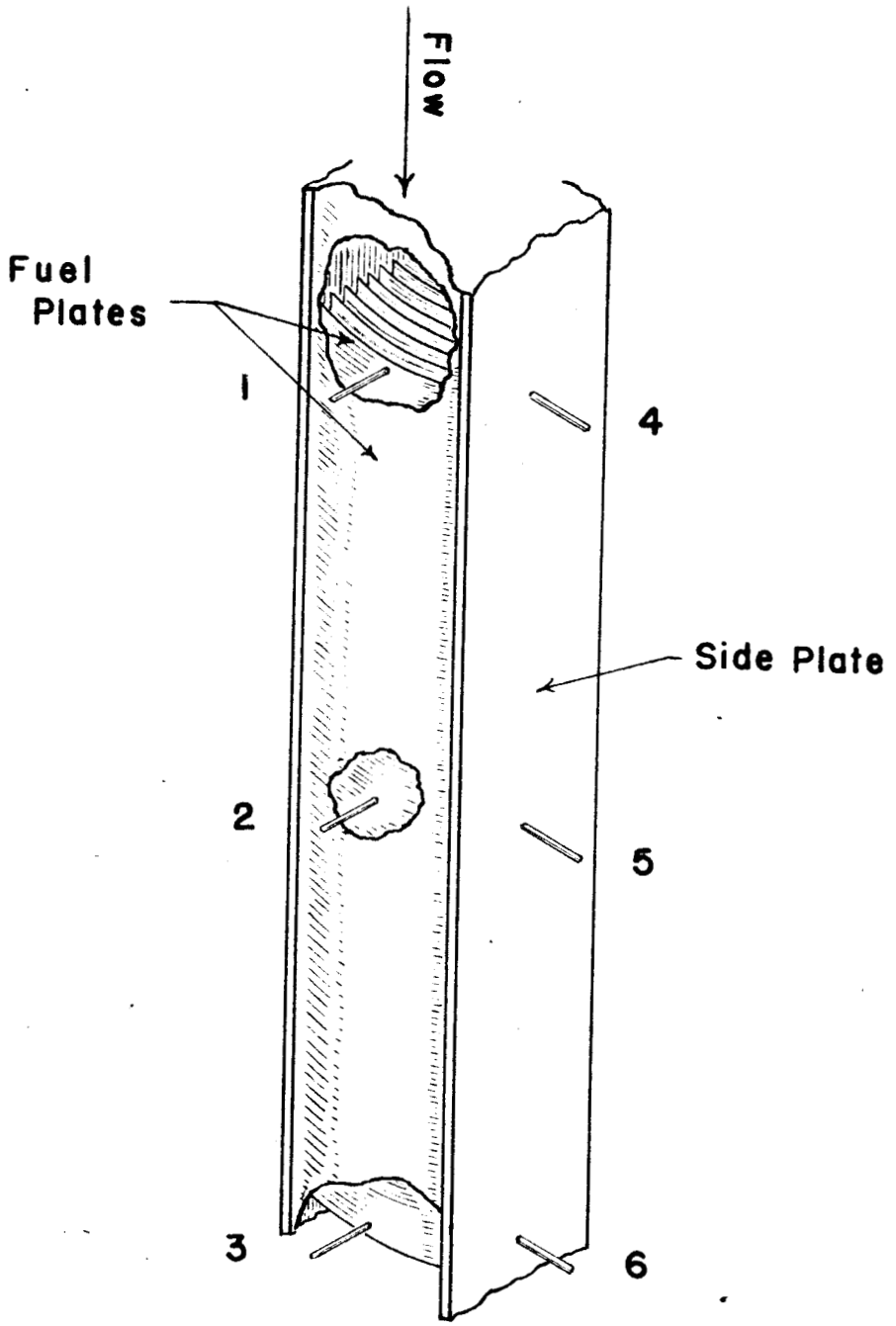

FIGURE 3

LOCATION OF PINS FOR VIBRATION MEASUREMENTS

[redacted]

[redacted]

Drawing # 5748

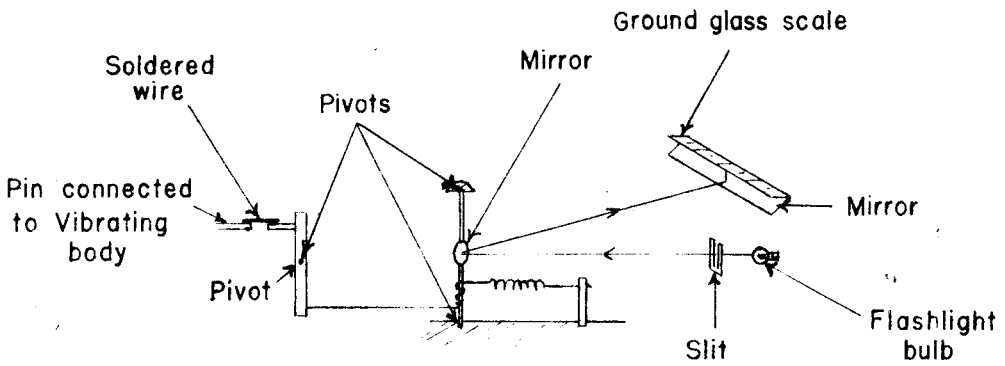

Visual measurements

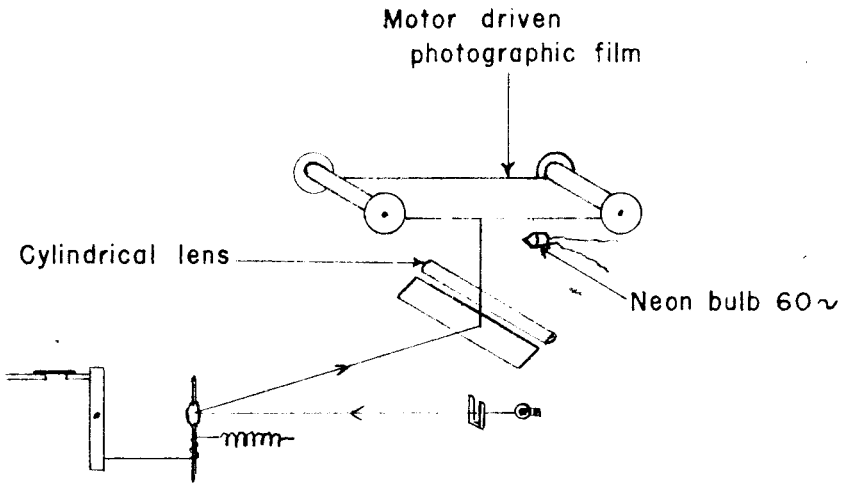

Recorded measurements

Figure 4—Davey Vibrometer

[redacted]

[redacted]

Drawing # 5749

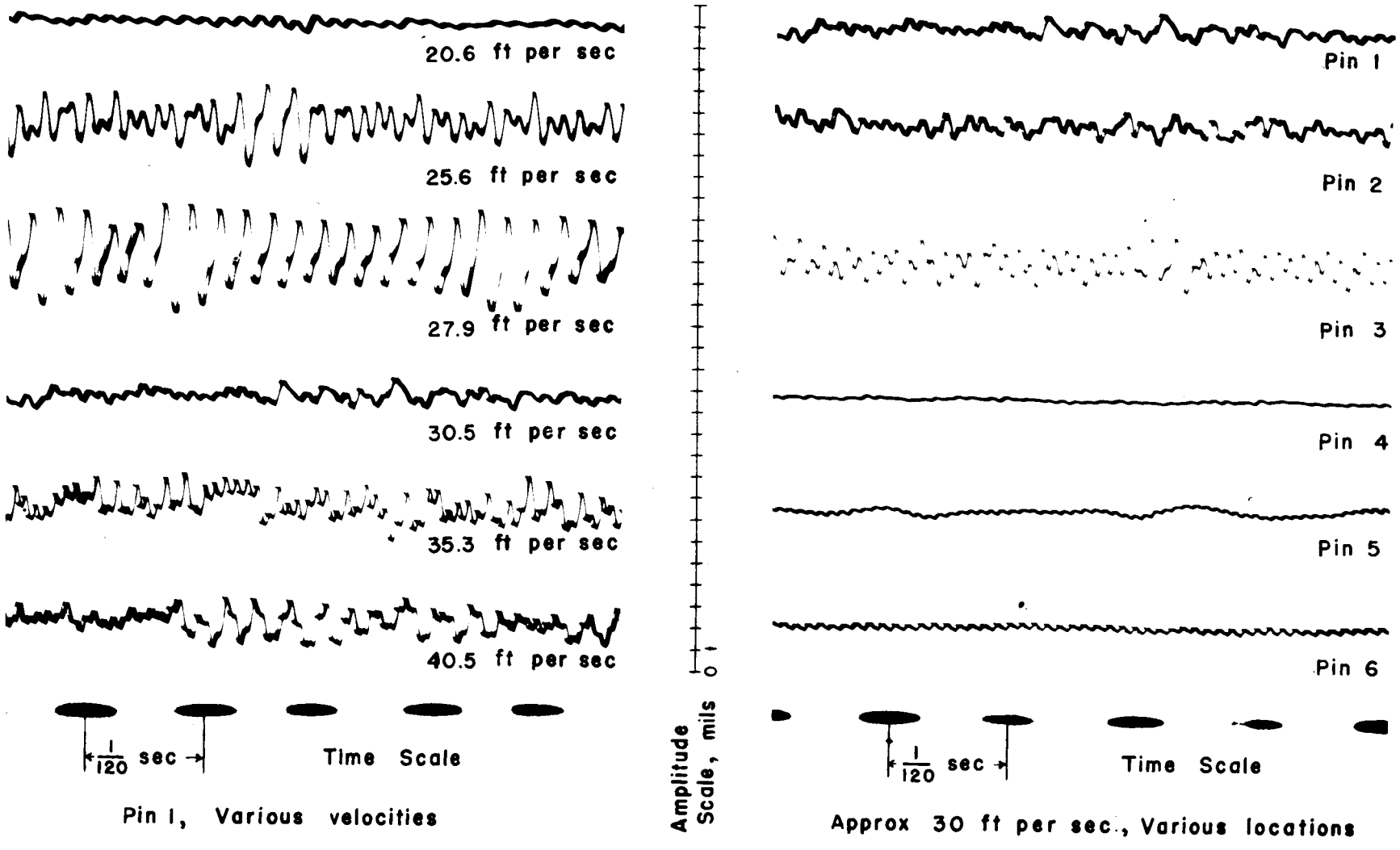

Figure 5 — Typical Vibrographs, Assembly 22

[redacted]

[redacted]

Drawing # 5750

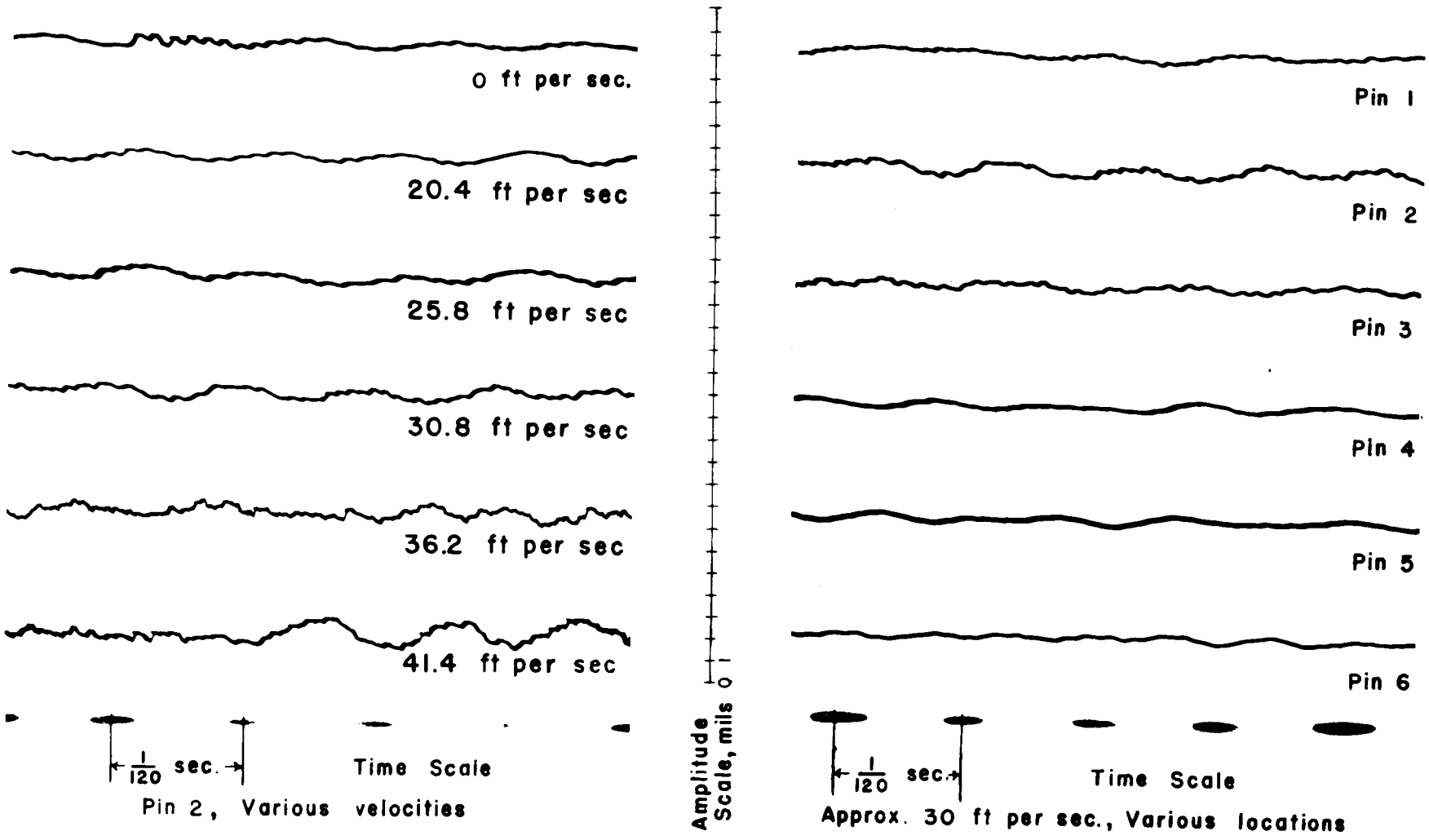

Figure 6 — Typical Vibrographs, Assembly 47

[redacted]

[redacted]

Drawing # 5768

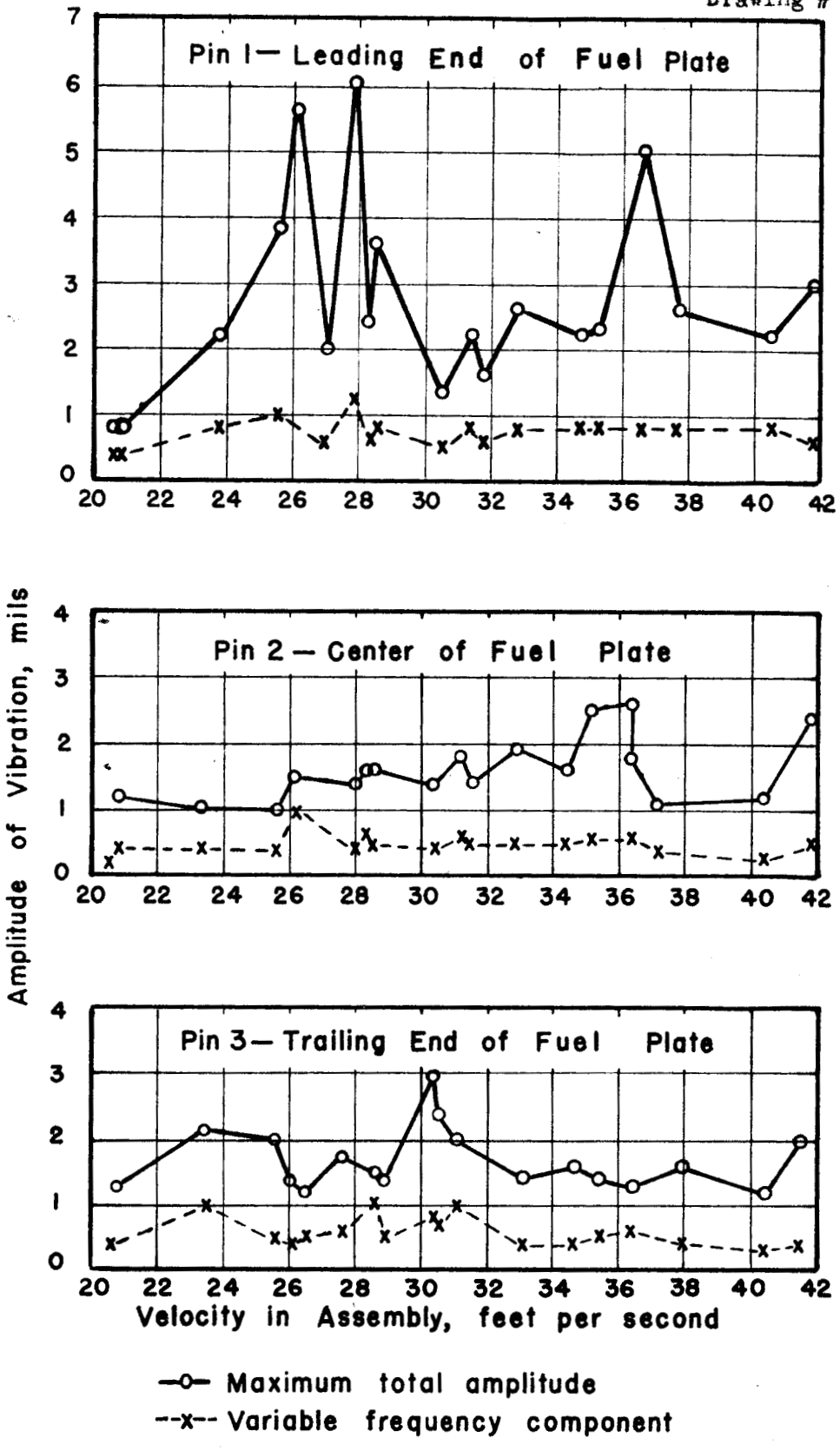

Figure 7 — Amplitudes of Vibration in Assembly 22

[redacted]

[redacted]

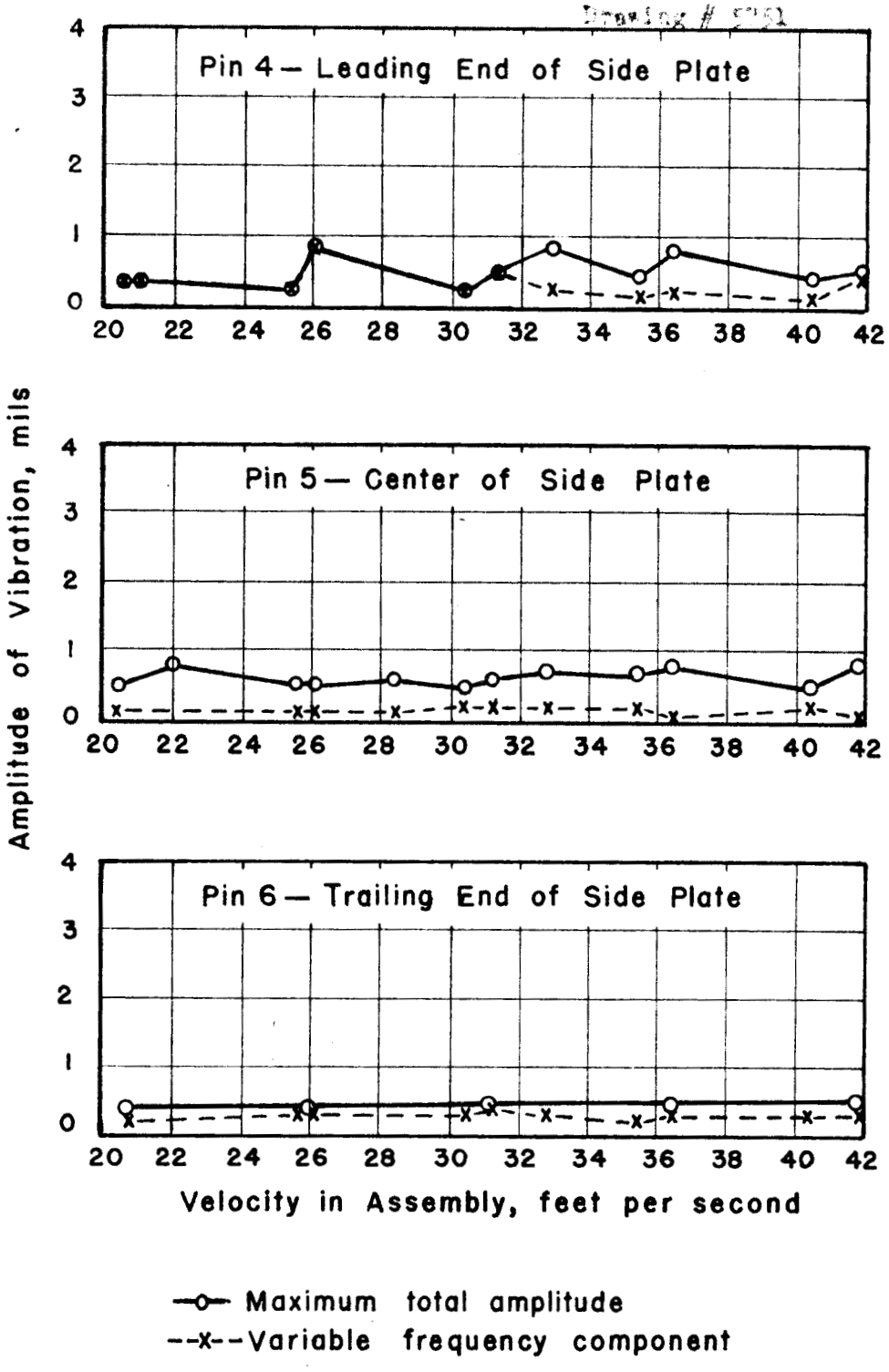

Figure 8 — Amplitudes of Vibration in Assembly 22

[redacted]

[redacted]

Drawing # 5752

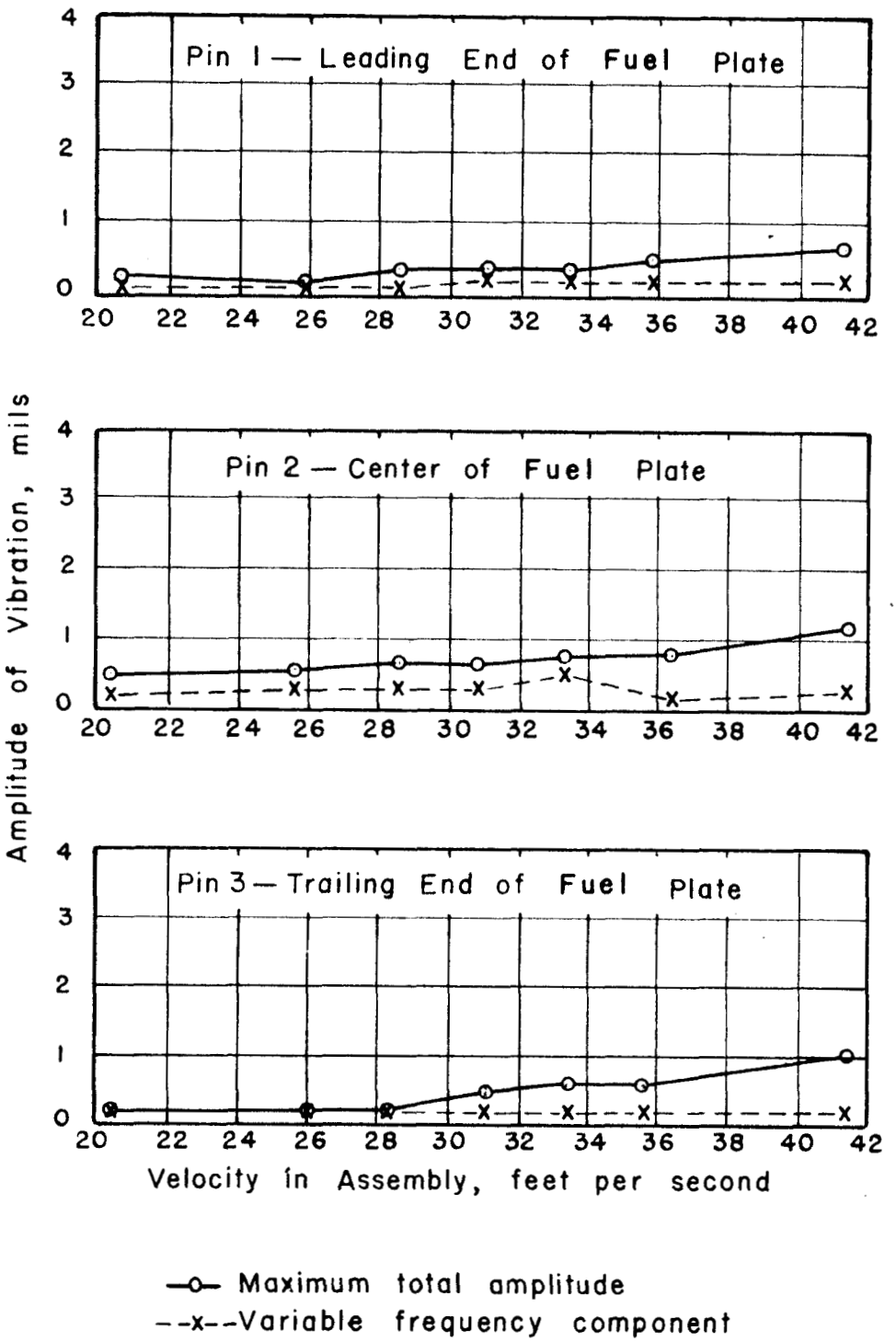

Figure 9 — Amplitudes of Vibration in Assembly 47

[redacted]

[redacted]

Drawing # 5753

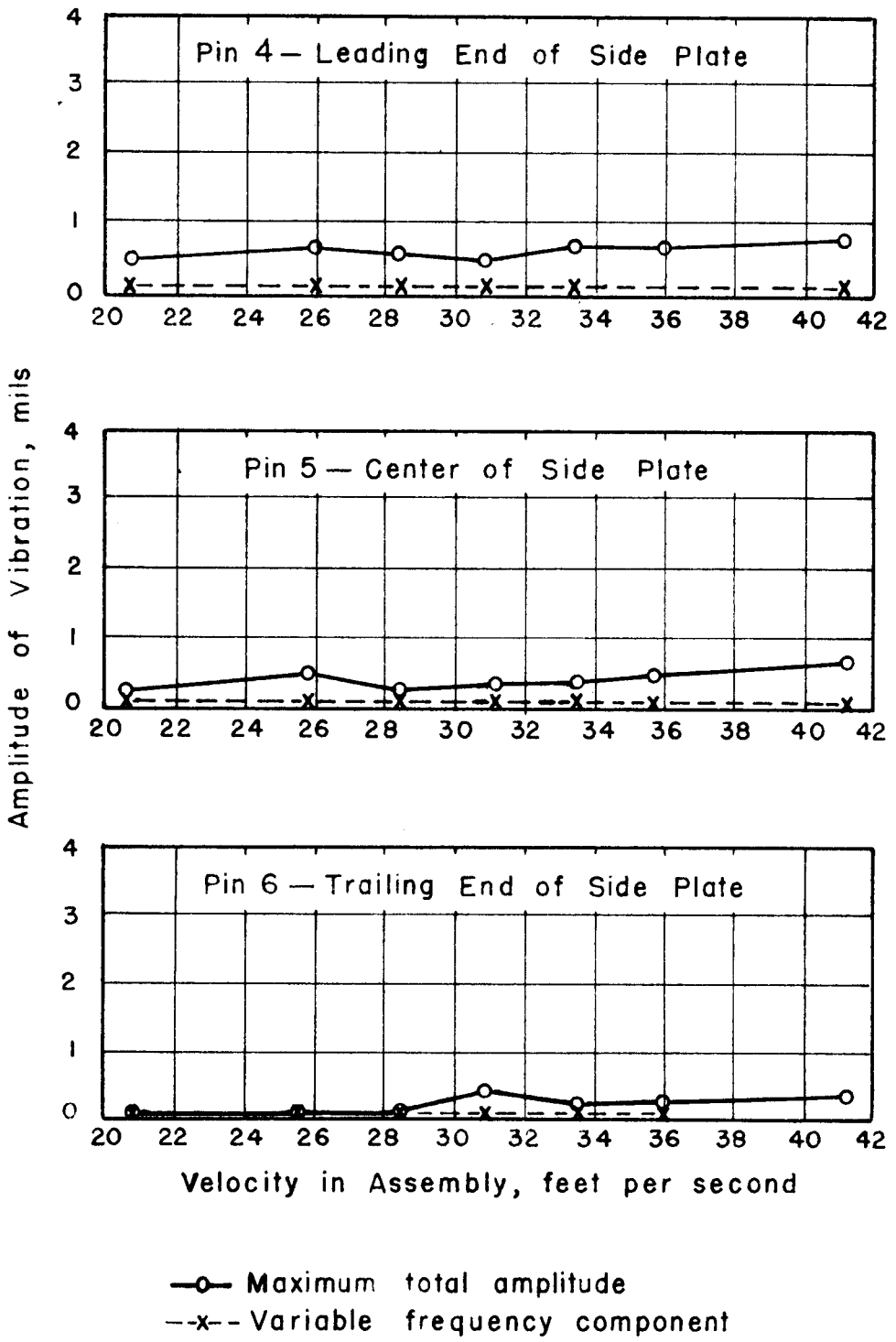

Figure 10 — Amplitudes of Vibration in Assembly 47

[redacted]

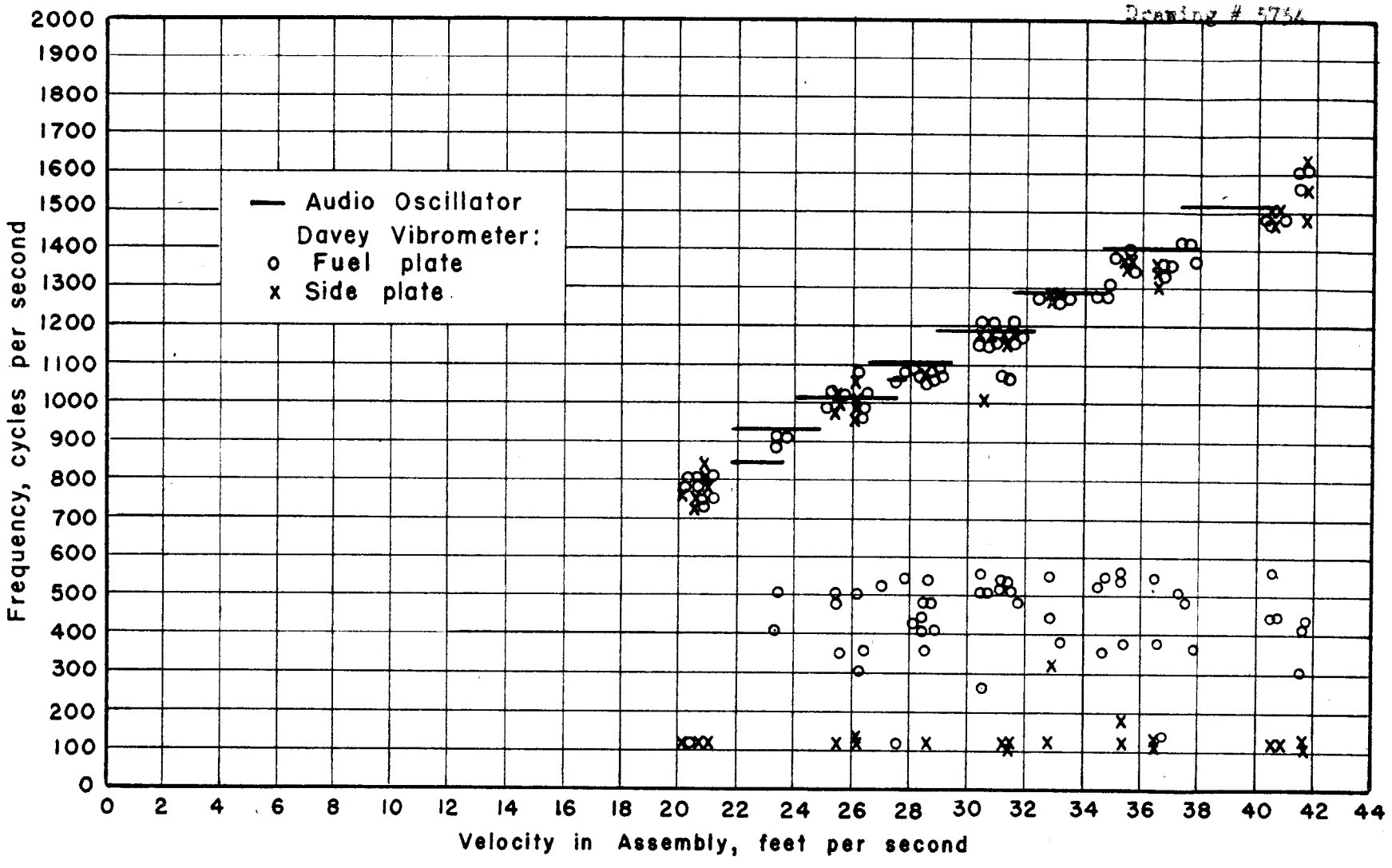

Figure 11 — Frequencies of Vibration in Assembly 22

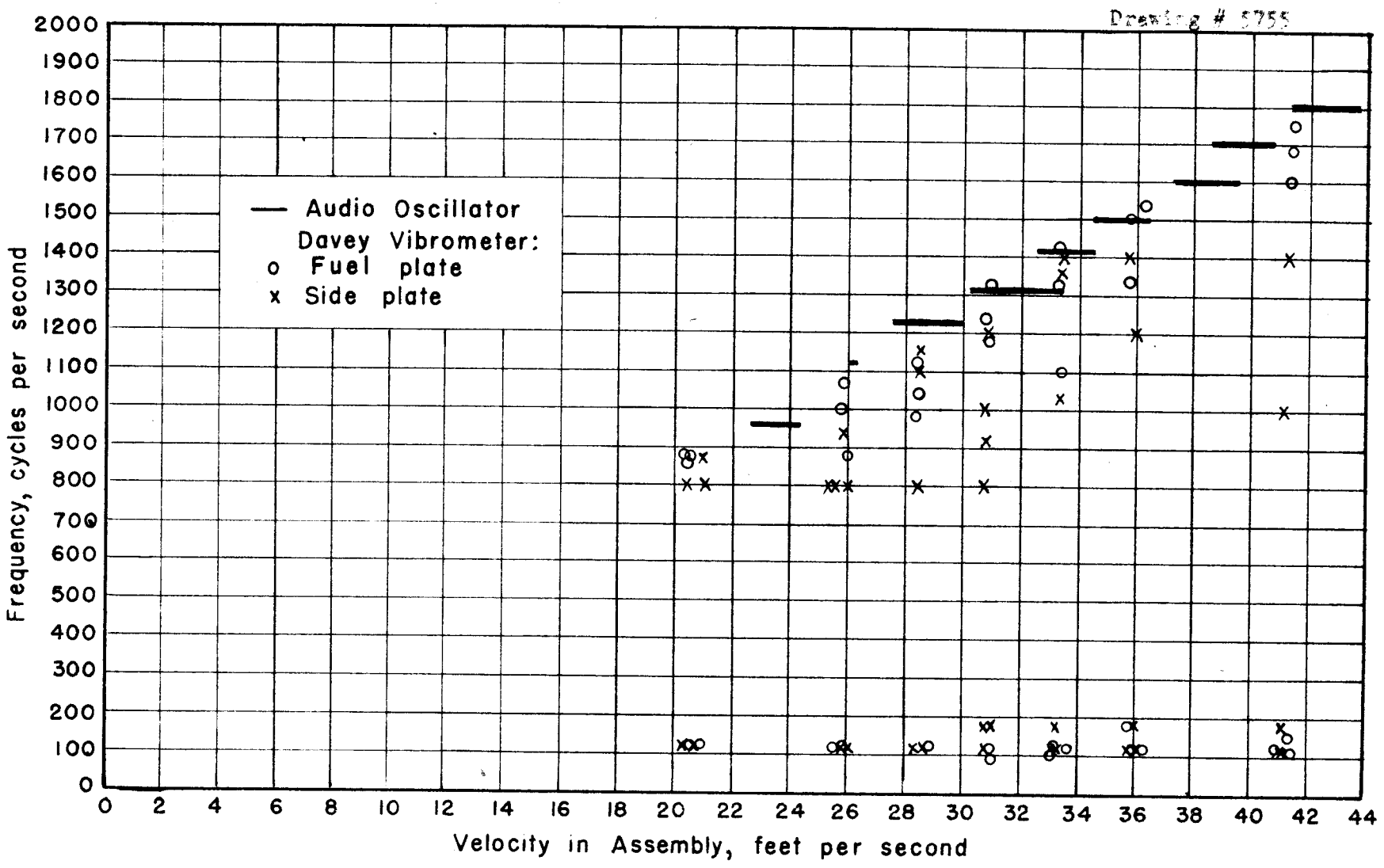

Figure 12 — Frequencies of Vibration in Assembly 47

[redacted]

Drawing # 5756

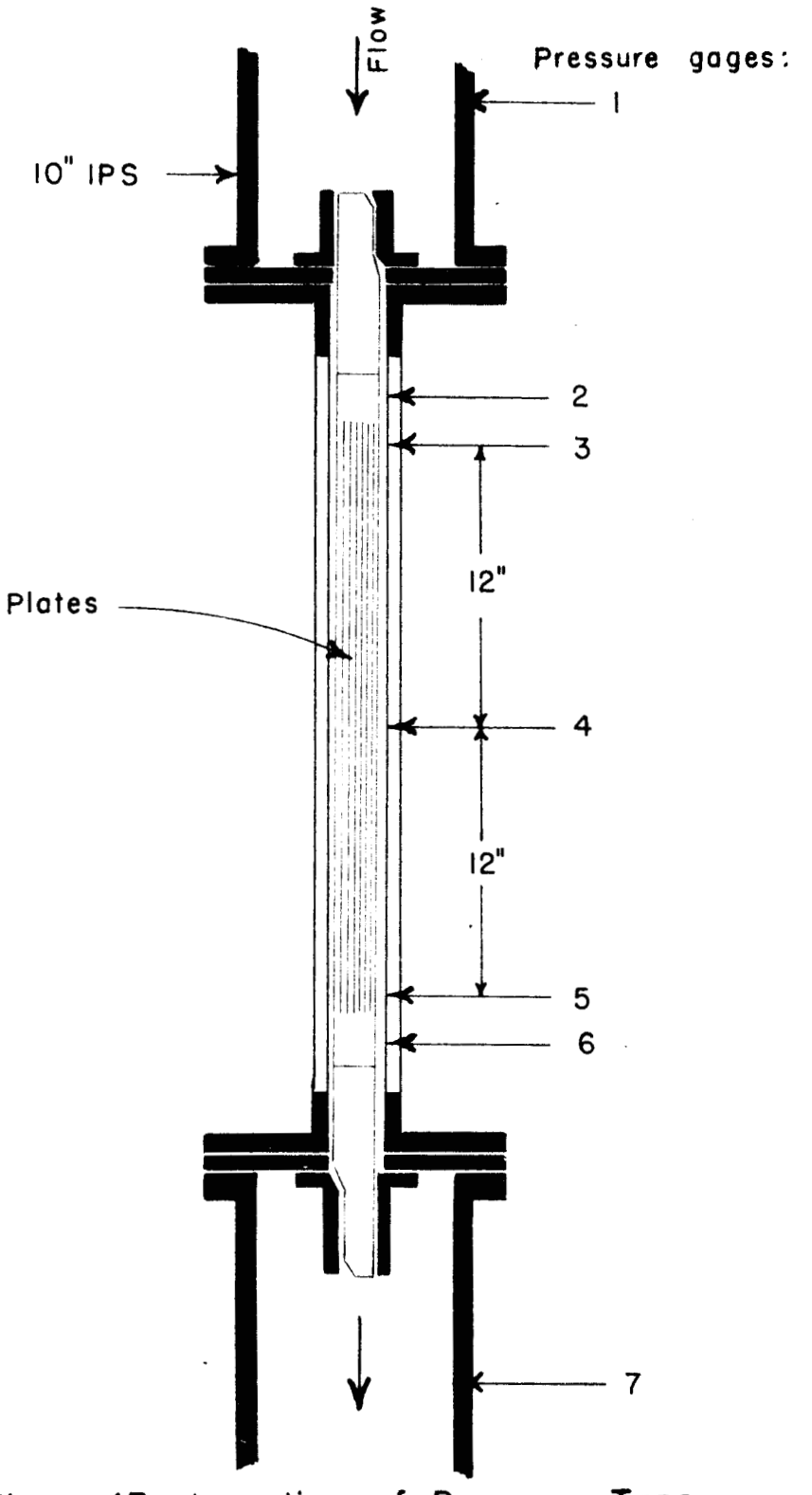

Figure 13—Location of Pressure Taps for TD 118 type Assembly

[redacted]

[redacted]

Drawing # 5757

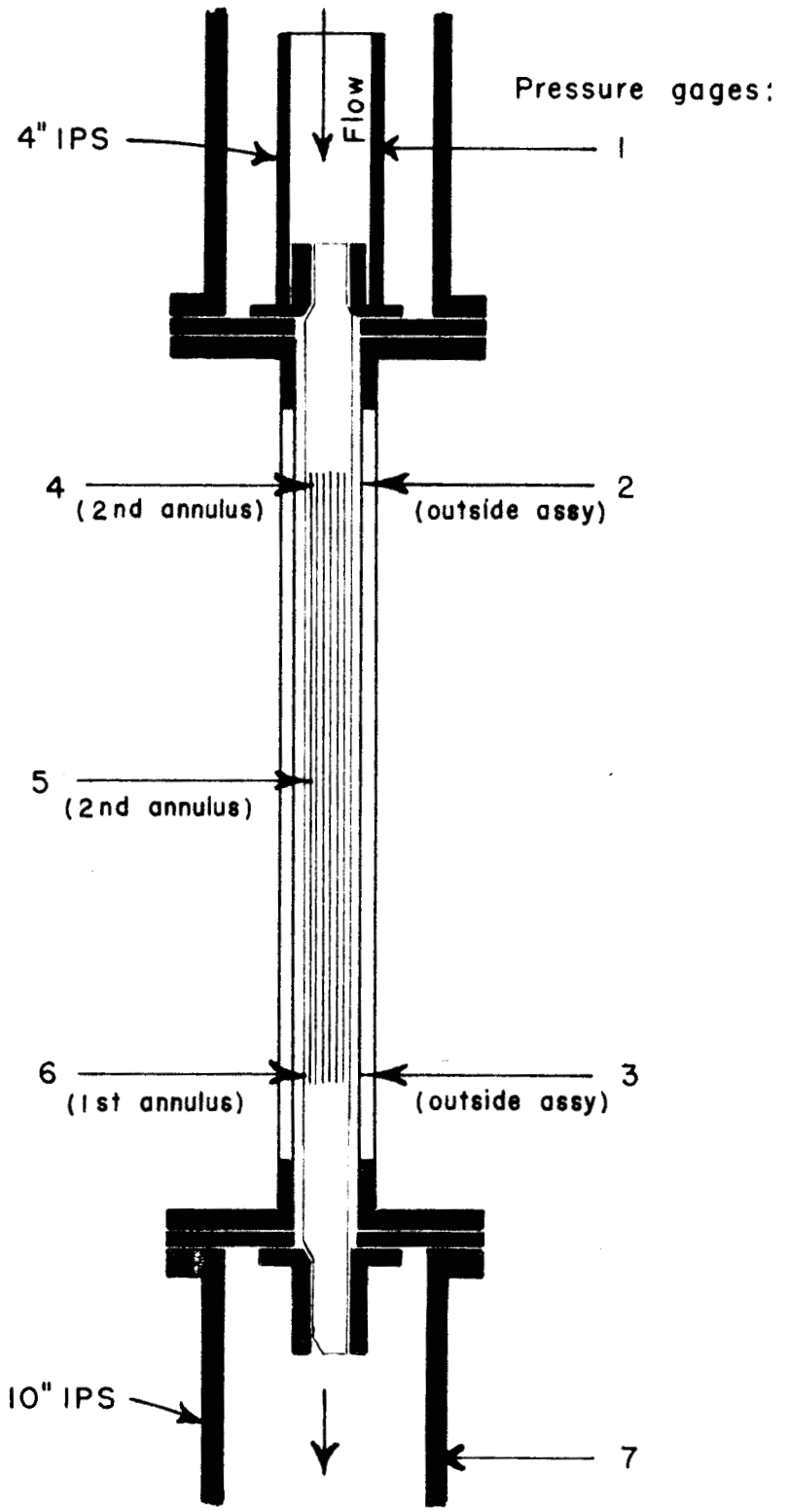

Figure 14—Location of Pressure Taps for Data in Table 8

[redacted]

[redacted]

Drawing # 5758

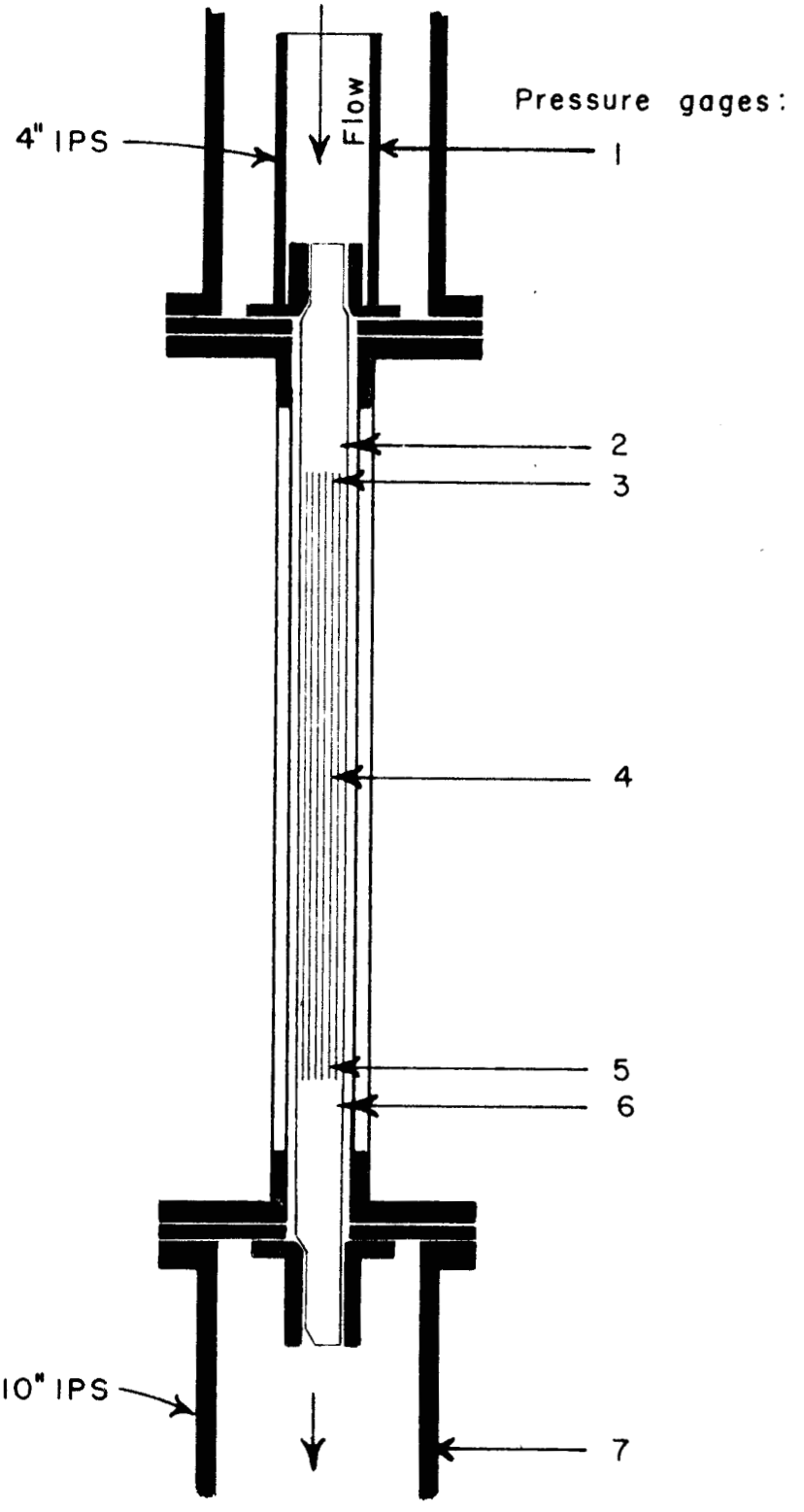

Figure 15—Location of Pressure Taps for Data in Tables 9 and 10

[redacted]

[redacted]

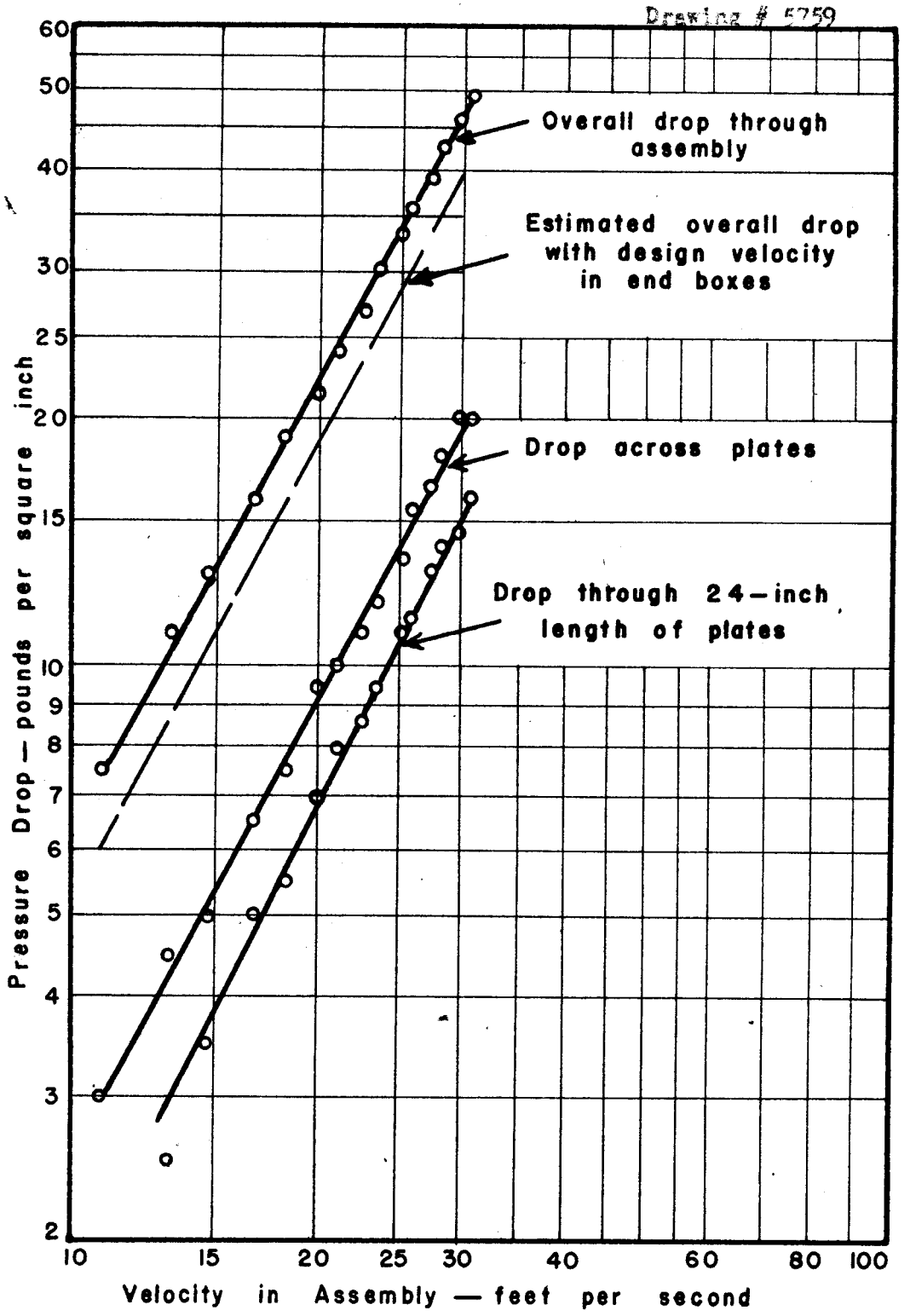

Figure 16. Pressure Drops in TD-118 type Assembly

(Assembly IV, 12 plates $1\frac{1}{2}$ mm thick, 3 mm annuli)

[redacted]

[redacted]

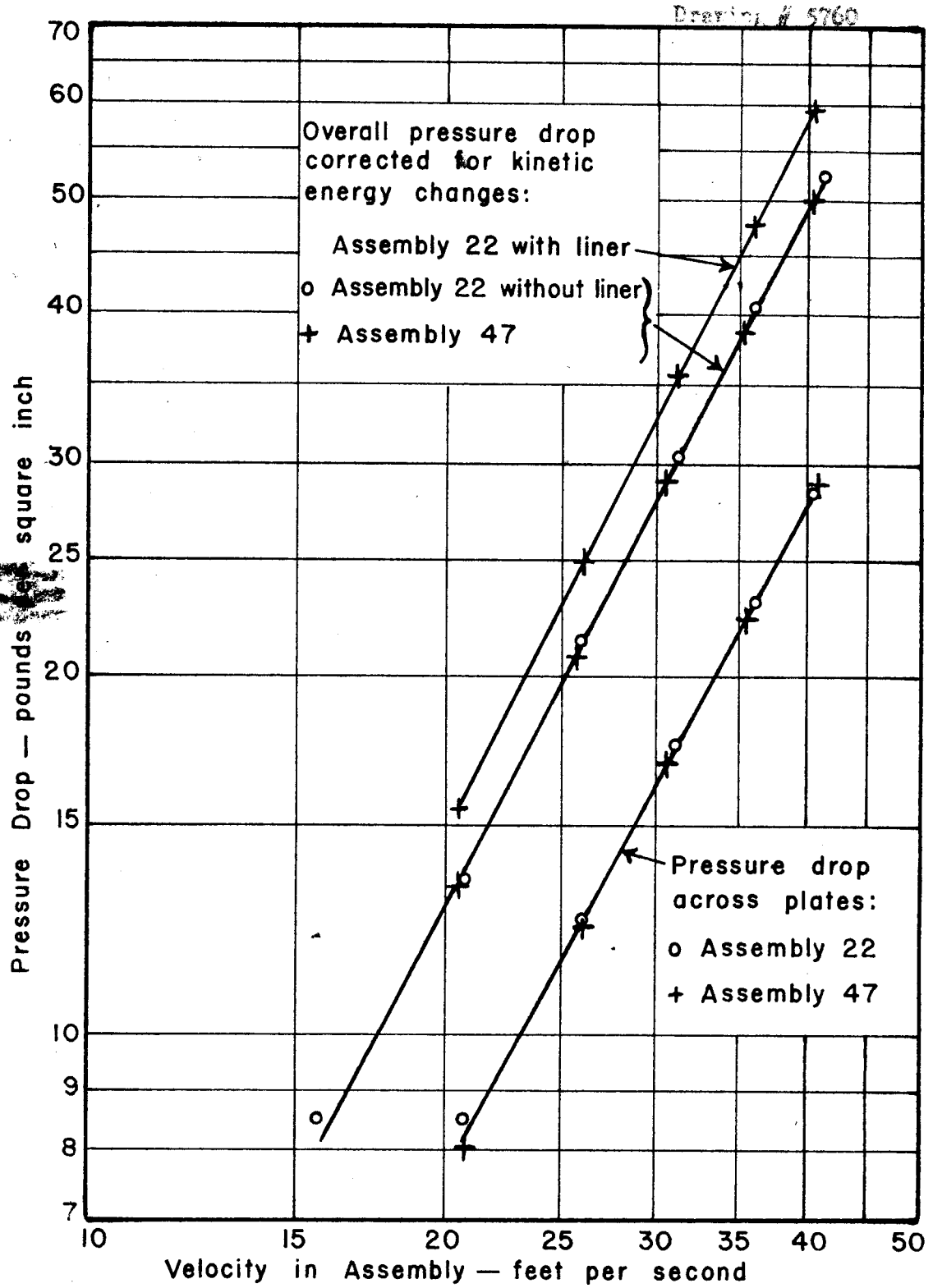

(Note: Liner is part No-3 Dwg TD 258)

Figure 17—Pressure Drops in TD 271 type Assemblies

[redacted]