SECRET

MARTIN MARIETTA ENERGY SYSTEMS LIBRARIES
3 4456 0050897 5

ORNL-480
PROGRESS REPORT

DECLASSIFIED By Authority Of: E.J. Murphy
GREEN RECEIPTS DESTROYED
Date 8.4.61 By E. Kadunnestr
COMPLETE

PHYSICS DIVISION

PHYSICS QUARTERLY PROGRESS REPORT FOR PERIOD ENDING SEPTEMBER 25, 1949

CENTRAL RESEARCH LIBRARY
DOCUMENT COLLECTION
LIBRARY LOAN COPY
DO NOT TRANSFER TO ANOTHER PERSON
If you wish someone else to see this document, send in name with document and the library will arrange a loan.

OAK RIDGE NATIONAL LABORATORY
OPERATED BY
CARBIDE AND CARBON CHEMICALS CORPORATION
FOR THE
ATOMIC ENERGY COMMISSION
OAK RIDGE, TENNESSEE

SECRET

~~SECRET~~

ORNL 480
This document consists of 25 pages.
Copy 8 of 86, Series A

Contract No. W-7405, eng 26

PHYSICS DIVISION

QUARTERLY PROGRESS REPORT
for Period Ending September 25, 1949

A. H. Snell, Director

E. O. Wollan, Associate Director

DATE ISSUED

NOV 8 1949

OAK RIDGE NATIONAL LABORATORY

operated by

Carbide and Carbon Chemicals Corporation

for the

Atomic Energy Commission

Post Office Box P

Oak Ridge, Tennessee

~~C A U T I O N~~

~~This document contains information affecting the National Defense of the U. S. Its transmission or the disclosure of its contents in any manner to an unauthorized person is prohibited and may result in severe criminal penalties under applicable Federal laws.~~

~~T A~~

~~ed data~~
~~Act of~~

MARTIN MARIETTA ENERGY SYSTEMS LIBRARIES
3 4456 0050897 5

~~SECRET~~

OAK RIDGE NATIONAL LABORATORY INTERNAL DISTRIBUTION

1. G. T. Felbeck (C&CCC)
2. 706-A Library
3. 706-A Library
4. 706-B Library
5. Biology Library
6. Health Physics Library
7. Training School Library
8. Training School Library
9. Central Files
10. Central Files
11. Central Files
12. Central Files
13. J. A. Swartout
14. J. H. Gillette
15. A. Hollaender
16. J. H. Frye, Jr.
17. E. J. Murphy
18. R. N. Lyon
19. C. N. Rucker
20. W. D. Lavers
21. A. M. Weinberg
22. J. S. Felton
23. A. H. Snell
24. E. O. Wollan
25. K. Z. Morgan
26. G. E. Boyd
27. Lewis Nelson
28. R. W. Stoughton
29. J. A. Lane
30. M. M. Mann
31. A. Householder
32. C. E. Winters
33. E. P. Blizard
34. W. H. Jordan
35. F. C. VonderLage
36. Central Files (Off-Plant)
37. Louis Roberts

OAK RIDGE NATIONAL LABORATORY EXTERNAL DISTRIBUTION

38-45. Argonne National Laboratory
46-48. Atomic Energy Commission, Washington
49-52. Brookhaven National Laboratory
53-54. General Electric Company, Richland
55-56. General Electric, Schenectady
57-60. Los Alamos
61. Mound Laboratory
62-63. New York Directed Operations
64. Patent Branch, Washington
65-79, Technical Information Branch, ORE
80-83. University of California, Radiation Laboratory
84-86. NEPA Project

[redacted]

This document contains information affecting the National Defense of the United States. Its transmission or the disclosure of its contents in any manner to an unauthorized person is prohibited and may result in severe criminal penalties under applicable Federal laws.

[redacted]

This document contains restricted data as defined in the Atomic Energy Act of 1946.

TABLE OF CONTENTS

INTRODUCTION AND SUMMARY 6

NUCLEAR PHYSICS 8

Fission Product Samarium 8

Resonance Escape Probability for Zirconium-Water System 8

SHIELDING 9

Summer Session on Shielding 9

Neutron Attenuation in Water; Lid Tank Measurements 11

Solution of the Boltzmann Equation for Non-Hydrogeneous Materials 11

INCREASING FLUX OF THE CLINTON REACTOR 13

PHYSICS OF SOLID STATE 15

Effects of Irradiation on Metals 15

Uranium-Aluminum Alloys 17

Internal Friction 17

Thermal Coefficient of Expanison of Uranium by Means of Bonded Wire Resistance Strain Gages 17

Irradiation of 25-28 Alloy 17

Irradiation of Beryllium Metal 17

Irradiation of Zirconium Metal 17

X-Ray Diffraction 18

Neutron Converter 18

Cryostat for Pile Irradiations 18

Equipment for ''Hot Laboratory'' 20

New Physics of Solids Laboratory 20

Physical Changes in Uranium Bearing Materials 20

Irradiation Creep Experiment 22

The Specific Heat of Uranyl Nitrate Hydrate Melts 22

THEORETICAL PHYSICS 24

Survey Article on ''Reactor Shielding Analysis'' 24

Activities with Nuclear Glossary Committee 24

Solution of the Helmholz Equation 24

Homogeneous Pilot Model Reactor 24

LIST OF FIGURES

Fig. 1 *Thermal Neutron Distribution Along Center Line of Lid Tank* 12

Fig. 2 *Neutron Converter and Water Jacket* 19

Fig. 3 *Two Medium Geometries for Which Solutions of the Diffusion Equation Have Been Obtained* 25

LIST OF TABLES

Table 1 *Copper Base Alloys—Irradiated Three Weeks in X-10 Pile* 16

INTRODUCTION AND SUMMARY

Presented herewith is the classified section of the ORNL Physics Division progress report covering the period June 25-September 25, 1949. The unclassified work for the same period is reported in ORNL 481. A summary of the progress reported is as follows:

Neutron Absorption in Fission Product Samarium. The slow neutron transmission spectrum of fission product samarium has been examined to see if there could be some form of Sm^{149} which does not strongly absorb neutrons. The experiment depends upon the measurement of the strength of the 0.096 ev resonance, and the derivation therefrom of the number of Sm^{149} atoms present. Comparison will be made with the number of Sm^{149} atoms expected to be made according to fission yield data; this last information is not at hand as yet.

Resonance Escape Probability in Zr-H_2O Systems. The apparatus is ready, and the arrival of the zirconium is awaited.

Shielding. A number of consultants spent the summer at ORNL to aid in an evaluation of the present status of the whole shielding program. Twenty-six reports contain the results of their study.

The attenuation of neutrons in water has been measured in the "lid tank"; the results cover an intensity range of over 10^8.

Analytical work on shielding continues along the direction of studying the solution of the Boltzmann equation for non-hydrogenous materials.

ORNL Pile Study. A study has shown that the slow neutron flux in the ORNL graphite reactor can probably be increased by a factor of about 7 by replacing the present loading of normal uranium slugs with enriched uranium alloy slugs, while the operating power remains unchanged. If at the same time the latter can be increased slightly as a result of the elimination of the present slug coating failure problem, a factor of 10 in flux does not seem out of the question. The proposal is highly attractive from the points of view of isotope production, chemical separation of fission products, and experimental use of the pile.

Physics of the Solid State. Measurements of the effects of pile irradiation upon copper base alloys have been continued. One surprising observation is a decrease in resistance in Cu-Zn and Cu-Al accompanying an increase in hardness.

The latest set of U-Al alloy samples have been returned after a month's irradiation at Hanford. Measurements are in progress.

Irradiation of beryllium 150 days at Hanford has been found to produce no change in electrical resistivity. Zirconium samples, on the other hand, showed an increase in resistivity.

A new apparatus for fast neutron irradiations has been installed in the ORNL reactor. It consists of a cavity surrounded by water-cooled U^{235} alloy.

Considerable effort has been devoted to the design and the furnishing of the new Physics of Solids *hot* laboratory.

A sharp decrease in thermal conductivity of uranium-bearing graphite was observed after three weeks' irradiation in the ORNL reactor.

The specific heat of uranium hydrate melts has been found to be 0.33 calories per gram in the temperature range 65° to 100° C.

NUCLEAR PHYSICS

Fission Product Samarium (L. W. Cochran). L. B. Borst and the Chalk River group have suggested that either the Sm^{149} fission yield is lower than supposed or else a long lived isomeric state of Sm^{149} exists which does not absorb neutrons. We have been cooperating with Borst and his associates at Brookhaven National Laboratory in an attempt to investigate the validity of this suggestion.

A slug irradiated at Oak Ridge was partially dissolved at BNL. The gross rare earth fraction was purified by normal chemical procedures and then given a final purification by an ion exchange column extraction at MIT. The center cut from the Samarium fraction was shipped to ORNL. G. W. Parker of the Chemistry Division deposited the several microgram samples into one of the spectrometer capillary tubes in the form of oxalate using lanthanum as carrier.

Transmission measurements of the sample were taken with the spectrometer as a function of energy from 0.02 to 0.20 ev. These measurements needed long counting times since all the transmissions were greater than 90%. The samarium resonance at 0.096 ev appeared in the data with a strength corresponding to the presence of about 2×10^{16} atoms of Sm^{149}. The decision as to whether or not this number of atoms corresponds to the accepted fission yield shall have to await our receiving more exact information about the history of the sample.

Resonance Escape Probability for Zirconium-Water System (J. I. Hoover). The equipment for this experiment has been constructed and a number of measurements made in water to determine its reproducibility. Currently the experiment is being held up pending the delivery of the zirconium from the Bureau of Mines. The present schedule calls for completion of the metal deliveries by November 15, at which time the work will be resumed.

SHIELDING

Summer Session on Shielding. A summer work session on shielding was held between June 15 and September 15 under the leadership of Gale Young. The topics covered can be seen from the following list of reports issued by the work session: (Titles are tentative in some cases, and may be changed.)

F. Friedman and H. Feshbach, *Collection of Data for Shielding,* ORNL 418

H. Feshbach, *Neutron Data for Water Shielding,* ORNL 417

H. Feshbach, *Fast Neutron Data,* ORNL 433

W. K. Ergen, *Total Cross Section of Light Elements as Obtained from the University of Minnesota,* ORNL 426

E. P. Blizard, *Capture Gamma Rays,* ORNL 419

G. Young and E. P. Blizard, *Summary of Gamma Rays from Fission and Fission Products,* ORNL 420

J. L. Powell and W. S. Snyder, *Absorption of Gamma Rays,* ORNL 421

T. A. Welton,* (review of analytical methods for shielding calculations)

J. W. Butler, *Asymptotic Neutron Distribution in a 3 Component Mixture with Forward Hydrogen Scattering,* ORNL 431

F. H. Murray, *Approximate Analysis of the Penetration of Neutrons through a Thick Shield Composed of Non-Hydrogenous Materials,* ORNL 424

T. A. Welton and G. Goertzel, *Asymptotic Distribution of Neutrons from a Point Source in a Medium Containing Hygrogen and an Isotropic Scatterer,* ORNL 425

G. Young, *Piece-Wise Greuling Solutions for Hydrogen, ORNL 415*

G. Young, *On Straight-Ahead Gamma Transmission with a Minimum in the Cross-Section,* ORNL 416

G. Goertzel and H. Kahn, *Monte Carlo Methods for Shield Computations,* ORNL 429

G. Goertzel, *Quota Sampling and Importance Functions in Stochastic Solution of Particle Problems,* ORNL 434

G. Goertzel, *A Proposed Particle Attenuation Problem,* ORNL 423

M. L. Nelson, *A Monte Carlo Computation Being Made for Neutron Attenuation in Water,* ORNL 439

H. P. Sleeper, *A Critical Review of ORNL Shield Measurements: Neutron Attenuation,* ORNL 436

E. P. Blizard, *Measurements on Hanford Type Shields,* ORNL 430

* On special contract with AEC (Dr. George Weil).

E. P. Blizard, *Canadian Measurements of an Iron-Water Shield,* ORNL-428

H. P. Sleeper, and C. E. Clifford, *Attenuation Measurements in Heavy Aggregate M1 Concrete,* ORNL 438

W. K. Ergen and C. E. Clifford, *Neutron and Gamma Attenuation through Tungsten Carbide and Boron Carbide,* ORNL 435

W. K. Ergen, E. P. Blizard, C. E. Clifford and G. Young, *Program for the ORNL Bulk Shield Testing Facility,* ORNL 427

J. L. Powell, *Gamma-ray Attenuation Experiment References,* ORNL 422

E. P. Blizard, *Notes on the Cost of Enriched Boron in Ton Lots,* ORNL 432

J. R. Dietrich, *Preliminary Estimate of an Iron-Water Shield for the Naval Reactor,* ORNL 440

These reports cover ORNL 415 to 440 inclusive, plus the report by Welton issued through the AEC, by ORNL.

Participating personnel and their sponsors are listed below:

ORGANIZATION	INDIVIDUALS	SPONSOR
AEC	T. A. Welton	AEC
ANL	J. W. Butler J. R. Dietrich	AEC
Bureau of Aeronautics	R. Zirkind	Navy
Bureau of Ships	E. P. Blizard	Navy
KAPL	H. P. Sleeper	AEC
NEPA	W. K. Ergen J. L. Powell	Air Force
NDA	F. L. Friedman G. Goertzel H. Feshbach G. Young	Navy
ORNL	C. E. Clifford F. H. Murray M. L. Nelson W. S. Snyder	AEC
RAND	H. Kahn	Air Force

Neutron Attenuation in Water; Lid Tank Measurements (C. E. Clifford). During the last quarter the distribution of thermal neutrons along the axis of the lid tank with no source in place and with the boron shutters closed has been measured. This was done primarily to obtain the magnitude of the background present in the tank due to pile neutrons. The thermal neutron flux adjacent to the source container was also measured to allow an estimation of the source intensity to be expected in the facility.

These measurements were taken with the following instruments:

(1) A natural uranium fission chamber with approximately a ½ in. effective area.

(2) A U^{235} fission chamber with a 3 in. effective area.

(3) Standardized indium foils.

(4) BF_3 counter (1 in. diameter, 8 in. length).

(5) BF_3 counter (2 in. diameter, 25 in. length).

These data are reported in Fig. 1 in which all the data of the various counters have been normalized to the nv measurements of the foils. A significant background (which is indicated in the figure) was detected at the boundaries of the tank, although the tank which plugs the hole through the shield was filled with water.

Solution of the Boltzmann Equation for Non-Hydrogenous Materials (F. H. Murray). In the analytical studies of the shielding problem it is shown that the solution of the Boltzmann equation for non-hydrogeneous materials can be reduced to a system of equations of the type studied by Birkoff, for a finite distance from the source which is assumed to have a continuous energy distribution. The Birkhoff solutions are asymptotic in the sense that the solution can be represented as a power series in a variable ξ which is the average log energy loss per collision. The method is limited to the case in which only a definite finite number of spherical harmonics can be assumed sufficient for the solution.

For materials and energies such that the Bethe-Plazak shadow scattering is important, such as a mixture of lead and water at high energies, the calculation of the flux at large distances from a plane source is shown to depend on the determination of the characteristic values and functions of a differential equation of Schroedinger type similar to that of Wick. Here the problem can be considered as one containing a perturbed potential function, with the unperturbed potential depending only on a "diffraction scattering" potential $C\exp[-x^2/(kR)^2]$; explicit methods of solution are under study.

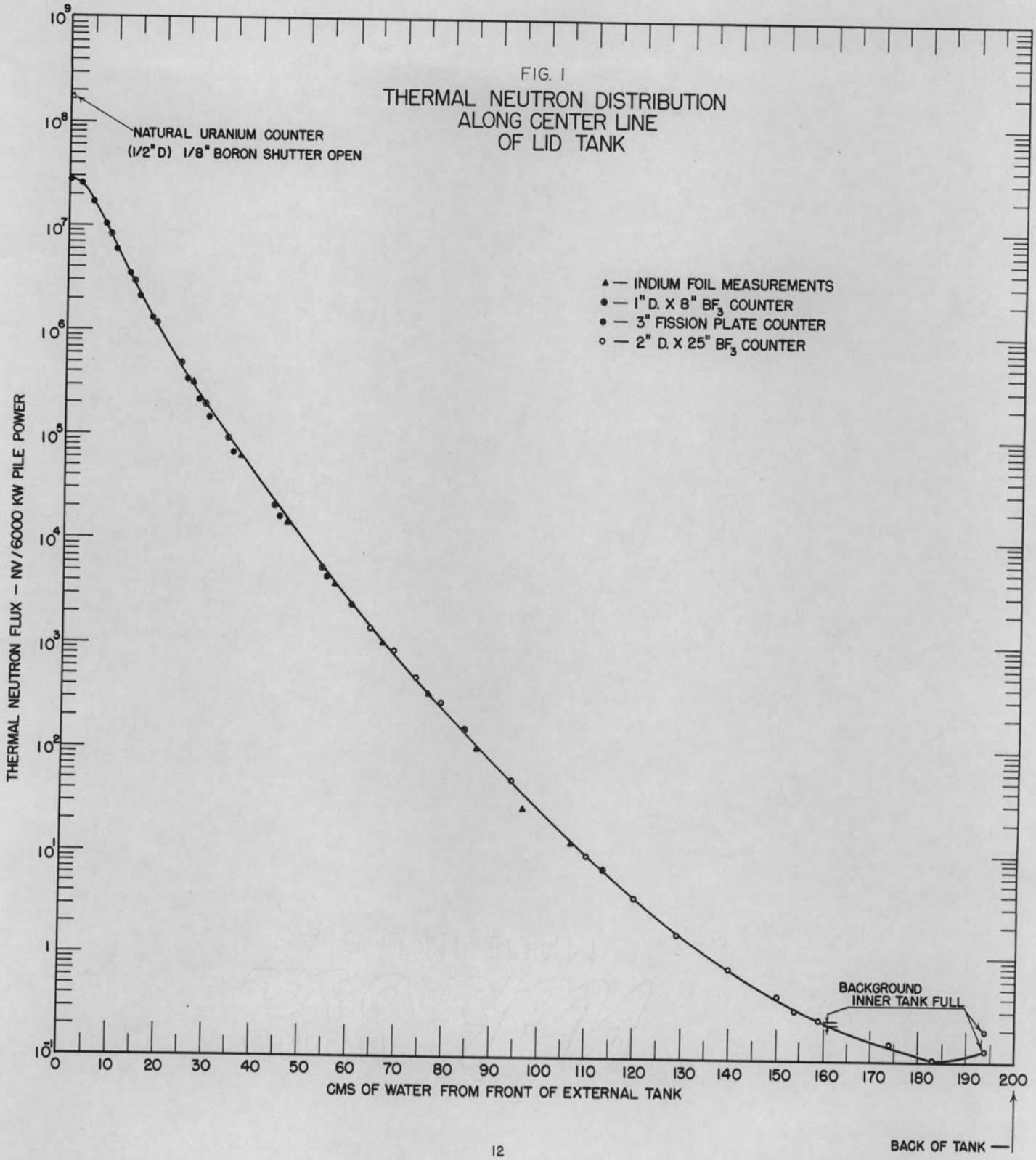
FIG. 1
THERMAL NEUTRON DISTRIBUTION
ALONG CENTER LINE
OF LID TANK
NATURAL URANIUM COUNTER
(1/2" D) 1/8" BORON SHUTTER OPEN
▲ — INDIUM FOIL MEASUREMENTS
● — 1" D. X 8" BF3 COUNTER
● — 3" FISSION PLATE COUNTER
○ — 2" D. X 25" BF3 COUNTER
BACKGROUND
INNER TANK FULL
THERMAL NEUTRON FLUX – NV/6000 KW PILE POWER
CMS OF WATER FROM FRONT OF EXTERNAL TANK
BACK OF TANK

INCREASING FLUX OF THE CLINTON REACTOR

N. F. Lansing, A. M. Weinberg

Any modification of the Clinton reactor increasing the central flux and the neutron current from the beam holes would be desirable. Not only would many experiments currently in progress be improved, but a large number of additional experiments would become feasible.

Recently a study has been undertaken to investigate the feasibility of making a substantial increase in the central flux by replacing the present loading with fuel elements containing uranium highly enriched in U^{235}. While the studies were initially predicated on operation at 4000 kw—essentially the present operating level—it now appears that some increase in power may also be achieved at moderate cost. In general, the result of replacing natural uranium with enriched fuel elements is to decrease the total amount of U^{235} required if operation at the same power level is feasible for criticality, this results in an increase in the ratio of kw per kg of U^{235} and a concomitant increase in thermal flux.

The calculations have postulated tubular fuel elements 2 mm of wall thickness containing U^{235} in a sandwich between Al cladding surfaces. Initial estimates of the critical masses required were made on the basis of a homegeneous mixture of U^{235}, Al and C atoms. These indicated that operation at 4000 kw with enriched fuel might yield a 10 fold increase in flux. However, calculation of the neutron distribution within the individual lattice cells (after the method described by Weinberg*) revealed that the ratio of maximum flux in the graphite to flux at the metal was on the order of 1.07 as compared with a value of 1.7 which obtains in the present system. The increase to be achieved is therefore approximately six fold unless the power is increased. The analysis of the unit cell characteristics was employed to evaluate the Laplacian for concentrations of 10 to 50 milligrams of U^{235}/cm^2, in fuel elements of 1.400 cm radius.

*'Science and Engineering of Nuclear Power', Vol. II, Chap. 6.

The values for the Laplacian established by the lattice analysis were used to evaluate the critical masses for cylindrical loading utilizing 600 and 800 channels, respectively, of the 1260 available channels in the graphite. Choosing a concentration of 20 mg/cm^2 as design point, the overall thermal neutron distribution in the reactor was calculated on the basis of simple diffusion theory for both 600 and 800 channel cases. The analysis of the reactor as a heat exchanger readily followed from a knowledge of the thermal flux distribution. Finally, the neutron currents to be expected at the center of radial and axial beam holes, respectively, were computed. As a check on this last step, a calculation of the current in a beam hole with the present loading was computed and was found to agree with the observed value within 15%.

The feasibility study is now being extended to problems bearing on reactor control. In addition, the prospects of achieving a substantial increase in power at modest additional cost is being explored. Such a power increase might result from contributions due to:

1. Reducing the pressure drop in the system as a consequence of improving flow in the main ducts and decreased losses in the channels through the graphite. This will yield an increased airflow for a given pressure developed by the fans.
2. Employing fuel elements with extended surfaces rather than the currently contemplated plain tubular ones.
3. Increasing the operating temperature of the fuel elements above the 245° C which is the maximum permitted the natural uranium slugs comprising the present loading.

Some of the characteristics of the reactor with the loadings studied are compared with the present system in the following table. The calculations are for operation at 4000 kw. Temperature shown are for pile cooling system in its current condition and for plain tubular fuel elements without extended surfaces.

	600 CHANNEL	800 CHANNEL	PRESENT (830 channels)
Length of loading in 24 feet graphite channels (feet)	8.6	7.8	13 to 18.5
U^{235} in reactor-kg	27.4	34.0	350
Central thermal flux in graphite (neuts/cm^2-sec)	7.4×10^{12}	6.1×10^{12}	1.25×10^{12}
Neutron current outside shield at center of 4 in. square hole through center of reactor (neuts/cm^2-sec)			
Axial hole	1.2×10^{8}	7.0×10^{7}	
Radial hole	2.7×10^{8}	2.6×10^{8}	4.3×10^{7}
Maximum metal temperature (15° C inlet air) (°C)	255	215	245

PHYSICS OF SOLID STATE

Effects of Irradiation on Metals (R. H. Kernohan, A. B. Lewis, D. S. Billington). The study of the rate of hardening of irradiated, alpha-quenched copper-beryllium alloys was continued.

Measurements were made after heat treatment, at 250° C and 350° C, of samples exposed for 3 weeks in the X-10 pile. The new data tend to confirm the observations reported in the last quarterly report, namely, that the major portion of the increase in hardness and resistance due to irradiation is annealed out during the first few seconds of heat treatment. However, data obtained as a result of long continued heat treatment indicate that there may be a slight increase in the rate of hardening due to prior irradiation. Certain portions of this experiment will be repeated with the object in mind of having more precise control of the heat treating bath temperature in addition to observing the effect of initial grain size.

An "in-pile" measurement of the resistance of a copper-beryllium alloy was carried out. The resistance increased linearly at a rate of 1.5% per day for approximately one week. Unfortunately at this time the readings became erratic and eventually the circuits failed.

Hardness and electric resistivity specimens of copper-aluminum, copper-silicon, copper-zinc and OFHC copper were fabricated, heat treated and irradiated for three weeks in the X-10 pile.

Measurements before and after irradiation are recorded in the accompanying table.

The decrease in resistance of the copper zinc and copper aluminum alloys is very surprising in itself but when coupled with the increase in hardness appears extremely unusual. The original observation of decrease in resistance of the Cu-Zn alloy after irradiation was made several months ago but was not reported until recently confirmed.

Numerous control experiments have been made in order to eliminate the possibility of some other variable than irradiation causing the effect. Briefly the situation is this: The Cu-Zn and Cu-Al alloys are normal solid solutions not susceptible to change by heat treatment as in the case of precipitation hardening Cu-Be or order-disorder Cu_3Au, provided the alloys are in the annealed condition. However, the effect of irradiation is to make the alloys act as though a phase were precipitating from solid solution. A satisfactory explanation is not readily apparent. However, it seems not impossible to relate the

TABLE 1

Copper Base Alloys

(Irradiated three weeks in X-10 pile)

ALLOY	ATOMIC percent	RESISTANCE			HARDNESS - Rockwell F		
		Before Irrad.	After Irrad.	Change (percent	Before Irrad.	After Irrad.	Change (percen
		Microhm	Microhm				
Cu-Zn	1.35	98.7	99.0	+0.3	25.6	59.8	+34.2
	6.3	154.5	153.5	-0.65	40.4	64.0	+23.6
	12.6	208.2	204.5	-1.8	53.1	66.9	+13.8
Cu-Al	.61	148.7	148.6	-0.1	27.3	61.9	+34.6
	6.18	353.8	350.3	-1.0	58.6	72.7	+14.1
	9.5	436.7	427.0	-2.2	65.3	75.3	+10.0
Cu-Si	3.5	665.2	665.6	+0.1	60.4	72.0	+11.6
	5.6	939.8	939.4	0.0	77.0	83.6	+ 6.6

Each resistance value is the average for five specimens and is corrected to 20° C. It is accurate to ± .15%.

Each hardness value is the average for five specimens with three readings taken on each.

thermal properties of the solute atoms and their behavior in these alloys under neutron irradiation to the concept of localized high temperature spikes or zones.

Measurements of the resistivity of these copper base alloys, down to liquid nitrogen temperatures, are being continued.

Uranium-Aluminum Alloys (S. E. Dismuke). The samples that were exposed for one month in the Hanford pile (ORNL 365) have been returned, taken out of their containers, and measurements are in progress. The samples include:

3 of approximately 14 weight % U, 93% enriched in U^{235}

3 of approximately 30 weight % U, 38% enriched in U^{235}

3 of approximately 14 weight % U, depleted to .001% of U^{235}*

3 of approximately 30 weight % U, depleted to .001% of U^{235}*

Internal Friction (S. E. Dismuke). A vacuum system to be used in connection with the internal friction measurements on single metal crystals has been built.

Thermal Coefficient of Expansion of Uranium by Means of Bonded Wire Resistance Strain Gages (M. R. Goodman). An ORNL report has been prepared covering thermal expansion of various types of uranium and the peculiarities of the SR-4 strain gages employed in their measurement.

Irradiation of 25-28 Alloy (R. W. Coyle). Pre-irradiation properties are being determined on 2.7% and 6.5% enriched alloys.

Irradiation of Beryllium Metal (L. C. Templeton). Specimens of four types of beryllium metal have been exposed in the Hanford Pile for periods of approximately 30 days (2.13×10^{19} nvt) and 150 days (9.77×10^{19} nvt). The specimens, 3/16 in. diameter by 2.5 in. long rods, had been prepared by Dr. Kaufman at MIT from the same batch of metal, which was supplied by the Brush Company. The specimens included forged, extruded cost, extruded flake (turnings) and "QT" metal. Electrical resistivity measurements have been made at ORNL, while other properties are being measured at other laboratories. The resistivity after irradiation shows no significant change from the value obtained before irradiation. This is true for each of the four types of metal examined and both exposure periods.

Irradiation of Zirconium Metal (L. C. Templeton). Three zirconium bars, each approximately 0.168 in. × 0.168 in. × 2.50 in., were given an exposure of 1.41×10^{20} nvt in the Hanford Pile. Electrical resistance, hardness and dimensions were measured before and after irradiation. A fourth bar, of the

*In the last report these samples were erroneously described as containing natural U.

same dimensions, was used as a control. The changes in length, width, thickness, density and hardness (Rockwell "B" scale) were within the limit of experimental error. The electrical resistivity after irradiation was 6.7% greater than before irradiation.

X-Ray Diffraction (M. A. Bredig, F. A. Sherrill, B. S. Borie). Problems of the design of the X-ray diffraction spectrometer for highly radioactive specimens were discussed with Drs. B. E. Warren, MIT, and C. Borkowski, Chemical Division, ORNL.

Work of the Metallurgy Division on uranium metal and uranium-aluminum alloys was supported by a large number of back-reflection photographs and Geiger-counter spectrometer examinations. An addition to the spectrometer has been designed for the purpose of obtaining more quantitative data on the degree of preferred orientation in strongly absorbing metal specimens such as uranium and its alloys.

Neutron Converter (R. P. Metcalf). The neutron converter (converts slow neutrons into fast neutrons) was installed in the north end of Hole 51 of the pile on August 22, 1949.

The converter is a cylinder of enriched uranium alloyed with aluminum and aluminum clad. The cylinder is 12 inches long, 3-3/8 inches in diameter, and about 1/8 inch thick. It contains 105.4 grams of uranium 235. A detailed description of the cylinder and its fabrication is given in a report by C. D. Smith, ORNL 216.

Both surfaces of the cylinder are water cooled by a water jacket consisting of three coaxial aluminum tubes about 18 feet long. Water flows in through the inner annulus and out through the outer annulus. The converter forms the inner end of the intermediate tube. The space inside the inner tube is available for experimental purposes. This space is about 2.87 inches in diameter. A sketch of the converter and water jacket is given in Fig. 2.

The converter is cooled with demineralized water. Suitable instrumentation is provided to control and monitor the water flow and to protect the pile in case of failure. At present, no provision is made for controlling the water temperature, but it has been found to remain fairly constant.

The converter should be useful for radiation damage experiments requiring the 2.87 inch diameter and 70° F temperature together with the enhanced flux of fast neutrons.

Cryostat for Pile Irradiations. Design work on the new cryostat has been completed and construction is under way in the ORNL shops. It is expected that the cryostat will be finished and ready for testing by October 17.

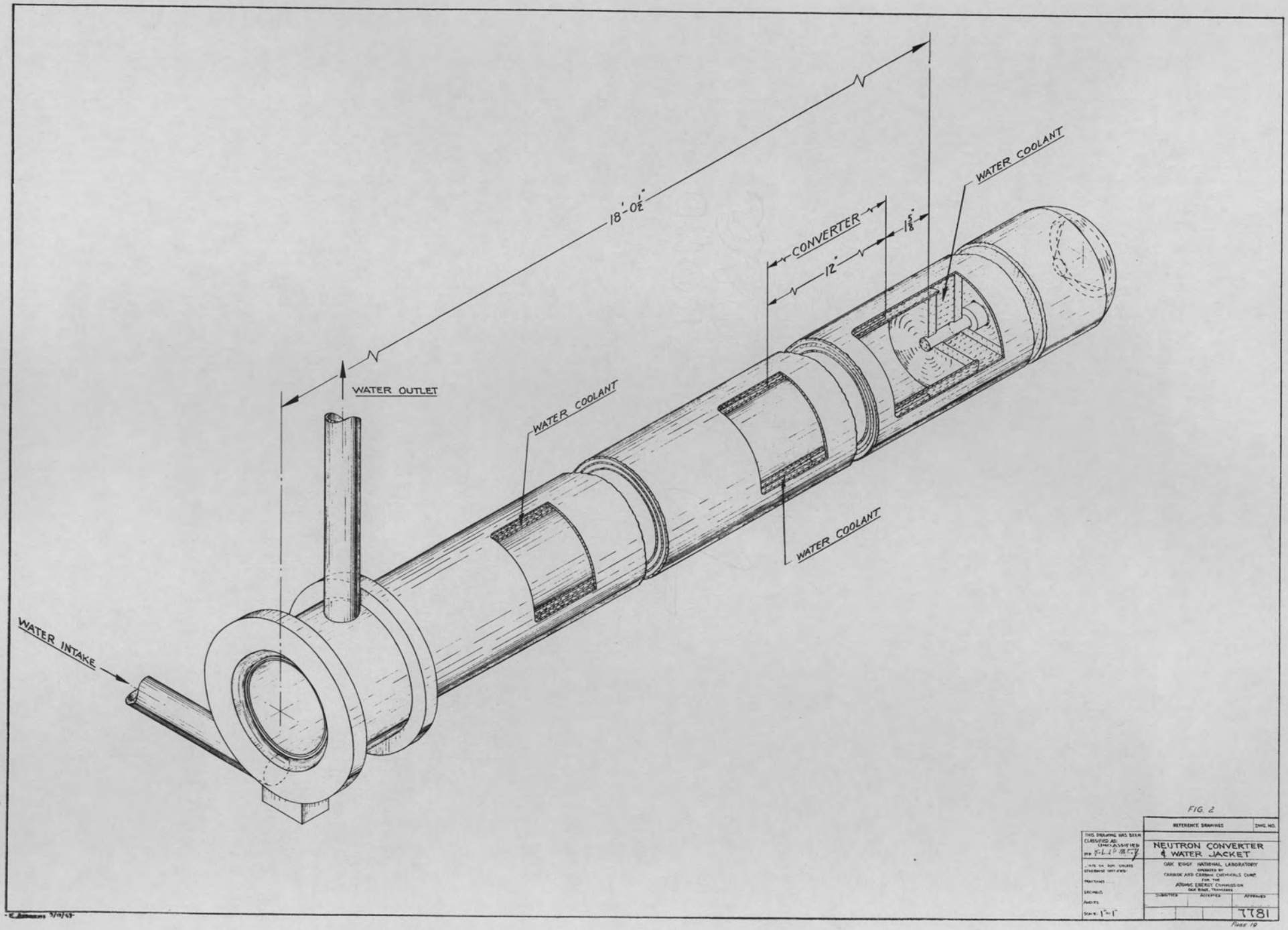
18'-0½"
CONVERTER
12"
1⅝"
WATER COOLANT
WATER OUTLET
WATER COOLANT
WATER COOLANT
WATER INTAKE
FIG. 2
REFERENCE DRAWINGS
DWG. NO.
THIS DRAWING HAS BEEN CLASSIFIED AS UNCLASSIFIED
NEUTRON CONVERTER & WATER JACKET
OAK RIDGE NATIONAL LABORATORY
OPERATED BY
CARBIDE AND CARBON CHEMICALS CORP.
FOR THE
ATOMIC ENERGY COMMISSION
OAK RIDGE, TENNESSEE
SUBMITTED
ACCEPTED
APPROVED
SCALE: 1"=1'
7781
Page 19

The helium refrigerator for cooling the cryostat has been ordered from Arthur D. Little, Inc. Delivery is expected about November 1.

Equipment for "Hot Laboratory" (D. S. Billington, S. E. Dismuke, R. W. Coyle, E. P. Epler). The design and procurement, in cooperation with Special Equipment Design Engineering group, of special equipment for remote control has progressed satisfactorily on the machine shop, vacuum cleaner, analytical balance, remote polishing, apparatus for measurements of dimensions, miscroscope, profile recorder, and Tukon hardness tester.

Preliminary design in cooperation with T. E. Cole and P. R. Bell of a servo system to be used on remote control apparatus has been completed and is being tested.

The Tukon micro-hardness tester adapted for complete remote control operation and projection viewing is nearing completion with delivery expected within thirty days. The versatility which has been incorporated in the set-up makes it very practical to use the Tukon optical system and specimen state for projection miscroscopy. A remote controlled turret having four par-focal objectives will permit a range of magnifications.

A prototype of a remote controlled polishing system incorporating a "sense of feel" for preparing metallographic specimens has been built and is being tested.

Specifications for the remote controlled electro-polishing equipment have been set up and designs are being carried forward by the Engineering Division.

The layout for a new improved version of a remotely operated surface profile analyser are complete.

The impact tester for use in the "hot lab" has been procured and special alterations are being completed by the manufacturer.

New Physics of Solids Laboratory (E. P. Epler, D. S. Billington, S. E. Dismuke). Design work has been completed by the Austin Company on doors, windows and barriers in the hot cell.

The one cell "mock-up" of the hot lab has been completed and used for lighting and ventilation equipment location and equipment design studies.

The design for the wall transfer and storage units, barrier transfer and storage unit, carrier for hot materials, control holes and spot lights has been completed by the Special Equipment Design Engineering Group.

Physical Changes in Uranium Bearing Materials[1] *(R. G. Berggren, J. M. Kincaid, W. Primak*[2]*).* The low temperature thermal conductivity apparatus des-

1 Sponsored by the Argonne National Laboratory

2 Consultant, Argonne National Laboratory

cribed previously[3] has been assembled[4] and is now operating with a uranium bearing graphite specimen. This is an 18.5 g sample of B1508A graphite which after UNH impregnation and firing contained 5.59 g uranium oxide. Before mounting the specimen in the apparatus, its longitudinal thermal conductivity was determined by the method previously described[5,6] and was found to be .123 cal/sec cm °C before impregnation and .112 after impregnation. The first readings of the temperature at the center of the specimen obtained after insertion into the pile were 168° C. It was estimated that in three weeks 8 KWH of fission energy had been expended per cm^3 of the specimen. The temperature at the center had risen to 270° C, and the temperature difference between the central and outer couple had increased to about 39° C. A 5-10 fold decrease in thermal conductivity in this period was indicated. The irradiation is being continued.

It has been decided to study the behavior of the thermal conductivity of enriched BeU alloy[7] on irradiation. The longitudinal thermal conductivity of a sample of BeU alloy containing 6% by weight of natural uranium, a facsimile of the alloy to be used for the irradiation studies, was measured by the method previously described[5,6] and result .226 cal/sec cm °C obtained. It was considered feasible to use the low temperature pile thermal conductivity apparatus for the irradiation if a method could be devised for controlling the specimen temperature. A dummy apparatus, in which a hollow stainless steel sample containing an electrical heater of tungsten wire wound on a lavite core was used in place of the specimen, was constructed and mounted in a wind tunnel in which pile channel air flows could be attained (100 linear ft/sec). It was expected that the BeU specimen would develop about 140 watts. Introducing this energy into the dummy apparatus electrically, it was found that the stainless steel sample reached a temperature of 215° C at an airflow of 100 ft/sec and 375° C at an airflow of 8.3 ft/sec. It was decided to control the temperature by regulating the channel airflow. Apparatus for this purpose is now under construction.

3 ORNL 171 p.6; ANL 4259 p.83; ANL 4300 p. 57.

4 We are indebted to H. E. Robertson (on loan from NEPA) for assistance in assembling this apparatus.

5 ORNL 365 p.16

6 We are indebted to J. G. Morgan (on loan from NEPA) for making these determinations.

7 MonN 442 p.16.

Irradiation Creep Experiment[8] *(J. G. Morgan*[9]*, W. Primak*[10]*, C. E. Stilson*[9]*).* An electrically heated model of the irradiation creep apparatus[11] was assembled with a hollow aluminum specimen, and operated for three weeks. Two sets of equipment incorporating the circuits previously reported[11] are being built to provide 2 recording channels; one set to be used for pile apparatus, and the other for the electrically heated controls. One channel was completed and was used for three weeks to record the data of the creep apparatus mentioned above. A pile creep apparatus and an electrical control are now being assembled for a pile creep test.

The specimen holder in the wire model[11,12] of the irradiation creep apparatus was tested and found unsatisfactory. Another design is now being tested[13]. The apparatus is also being modified to eliminate several difficulties encountered in the assembly of previous models, the twisting of heater and thermocouple leads, and the leaking of some of the joints.

The Specific Heat of Uranyl Nitrate Hydrate Melts (J. C. Carpenter and W. Primak). Some additional work was done to check the specific heats previously reported (ORNL 365, p. 18). The calorimetric procedure was modified. The same calorimeter was used, but larger samples were employed. A copper-constantan thermocouple calibrated against a 0.1° thermo was placed in the uranyl nitrate melt to obtain the temperature of the melt in the flask before it was plunged into the calorimeter. The rating periods were extended to permit a better evaluation of the heat losses. The water equivalent of the calorimeter and of the flask containing the melt was obtained by using several different quantities of water in place of the uranyl nitrate melt. The several equations relating these two water equivalents were plotted and a set of values close to the points of intersection were taken. The slopes of the two rating periods did not differ appreciably because the calorimeter was being used so far above room temperature. The rating curves were therefore extrapolated to the mixing time to obtain the calorimetric rise. The quantity of water in the calorimeter and also the quantity of material in the flask was obtained by weighing on a large chemical balance. The UNH was kept in the melted condition in a large vessel kept in a thermostat maintained at about 65° C. Its composi-

8 Sponsored by the Argonne National Laboratory.

9 On loan from NEPA.

10 Consultant, Argonne National Laboratory.

11 ORNL 365, p. 15.

12 ANL 4259, p. 83.

13 This work is being performed at the Argonne National Laboratory.

tion was checked regularly by analysis. Samples of about 2 gms were pipetted out and weighed in a platinum crucible. They were then ignited to 700° C and weighed again. The water of hydration was calculated from the weight of U_3O_8 obtained. Analyses were also made of samples from the flask used in the specific heat determination immediately after each determination. Specific heat determinations were obtained for three samples whose compositions, $UO_2(NO_3)_2 \cdot x H_2O$, were found to be X = 5.80, 5.74, and 6.05, respectively. The values obtained for the average specific heat between 65 and 100° C for these samples were 0.33_7, 0.33_4, 0.36_9 calories/gm, respectively. These values are believed to be good to 1%.

THEORETICAL PHYSICS

Survey Article on "Reactor Shielding Analysis" (N. M. Smith, D. W. Whitcombe).* A survey article on "Reactor Shielding Analysis" has been written for inclusion with the composite shielding paper to be published in an issue of *Nucleonics* now being edited by T. Rockwell and others. This article has been published internally as Central Files Memo 49-8-81, and is in process of declassification.

Activities with Nuclear Glossary Committee (N. M. Smith). The activities with the Nuclear Glossary Committee of the ASME, and the NRC have continued, and the section on "Reactor Theory" has been printed and distributed to a list of about 30 referees by the National Research Council. The critics have been asked to return their comments to the NRC by October 15. The glossary will be revised in conformity with recommendations by the referees by a committee yet to be appointed.

Solution of the Helmholtz Equation (N. M. Smith, D. W. Whitcombe). The Helmholtz (one group diffusion) equation has been solved for some two medium geometries in which there is tangential streaming along the interface. These geometries were selected as having interest to experimental shielding analysis and to shielding studies. These results have been published in ORNL 403 (Fig.3)

Homogeneous Pilot Model Reactor (L. C. Noderer, A. M. Weinberg). A report is in preparation concerning the physics of the proposed homogeneous pilot model reactor.

* On loan from NEPA.

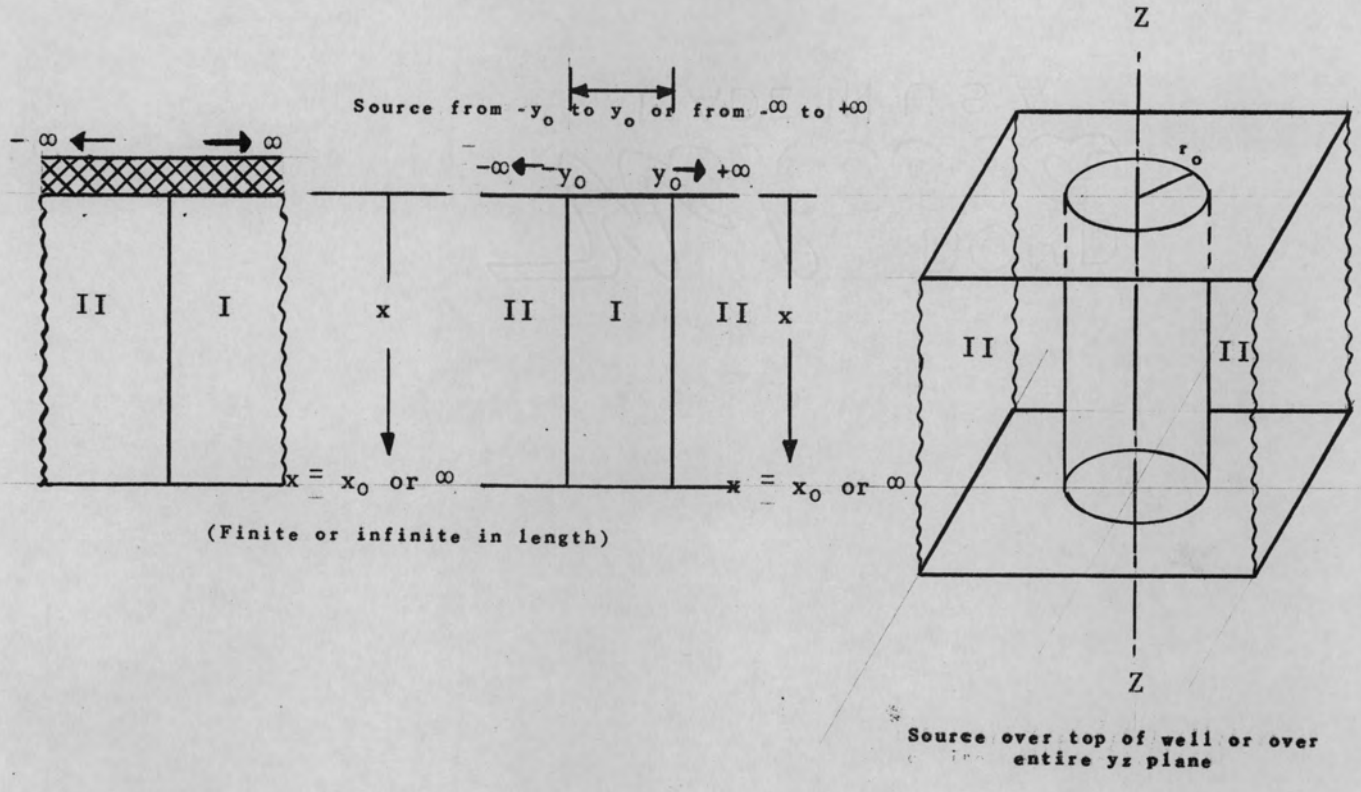

Cases I A,B II A 1,2, II B 1,2 III A 1,2; III B 1,2

Two Medium Geometries for Which Solutions of the Diffusion Equation Have Been Obtained

Figure 3