CENTRAL RESEARCH LIBRARY
DOCUMENT COLLECTION

[redacted]

ORNL 120
SUPPLEMENT 1
REACTORS

MARTIN MARIETTA ENERGY SYSTEMS LIBRARIES
3 4456 0360290 1

CLASSIFICATION CHANGED TO: Declassified
BY AUTHORITY OF: TID-1111
BY: E. Howard 10/22/56

LABORATORY 1954

TECHNICAL DIVISION

Engineering Development Section

HEAT DISSIPATION FROM FUEL ASSEMBLIES OF LOW POWER- HIGH FLUX REACTOR AFTER SHUT DOWN

W.K. STROMQUIST

[redacted]

OAK RIDGE NATIONAL LABORATORY
CENTRAL RESEARCH LIBRARY
CIRCULATION SECTION
4500N ROOM 175
LIBRARY LOAN COPY
DO NOT TRANSFER TO ANOTHER PERSON
If you wish someone else to see this report, send in name with report and the library will arrange a loan.
UCN-7969 (3 9-77)

OAK RIDGE NATIONAL LABORATORY

OPERATED BY
CARBIDE AND CARBON CHEMICALS CORPORATION
FOR THE
ATOMIC ENERGY COMMISSION
POST OFFICE BOX P
OAK RIDGE, TENNESSEE

[redacted]

TRANSMITTAL DATED 1-19-49

[redacted]

ORNL-120
Supplement 1

This document consists of
29 pages.
Copy 8 of 87 Series A.

ISSUED: Training School Library

Contract No. W-7405, eng 26

TECHNICAL DIVISION
Engineering Development Section

HEAT DISSIPATION FROM FUEL ASSEMBLIES OF LOW POWER - HIGH FLUX REACTOR AFTER SHUT DOWN

W. K. Stromquist
November 1948

OAK RIDGE NATIONAL LABORATORY
OPERATED BY
Carbide and Carbon Chemicals Corporation
For the
Atomic Energy Commission
Post Office Box P
Oak Ridge, Tennessee

Date Issued
JAN 19 1949

[redacted]

MARTIN MARIETTA ENERGY SYSTEMS LIBRARIES
3 4456 0360290 1

CONTENTS

0.0 Abstract

1.0 Introduction

2.0 Conclusions

3.0 Experimental Apparatus and Procedure

4.0 Discussion of Data

5.0 Appendices

5.1 Lengths of Unheated Channel Sections

5.2 Radiation from Ends of Mock Channel

5.3 Heat Conduction between Mock Channel and Jacket

5.4 Dimensions of Mock Channel

5.5 Temperature Rise in Fuel Assemblies After Shutdown

[redacted]

0.0 ABSTRACT

Experiments using a mock Fuel Assembly channel 11.4 mm thick, approximately the size channel considered for the Low Power-High Flux Reactor, show that between 1270 and 1470 Btu/(sq ft)(hr) can be transferred by natural convection of air without exceeding the melting point of aluminum in the channel. Calculations show that an operating power level of about 1300 kw is permitted by this heat transfer capacity.

1.0 INTRODUCTION

The experiments described in this report were conducted to support design calculations which indicated that natural convection of air would provide sufficient cooling capacity after shutdown in the Low Power-High Flux Reactor to prevent melting of the Fuel Assemblies if the channels were about 10 to 12 millimeters thick.

The thickness of the experimental mock Fuel Assembly channel was not intended to correspond to any particular proposed design, but was selected as the most easily fabricated size within the desired range.

2.0 CONCLUSIONS

The heat transfer capacity by natural convection of air in the Fuel Assembly of the Low Power-High Flux Reactor is expected to be between 1270 and 1470 Btu/(sq ft)(hr) when the maximum metal temperature is 1220 ^{o}F.

The value 1470 Btu/(sq ft)(hr) is the observed experimental value, which is considered to be an upper limit of the heat transfer capacity in the prototype because of differences of radiation and conduction characteristics

[redacted]

between the prototype and the mock channel. The value 1270 Btu/(sq ft)(hr) is a lower limit resulting from correction for radiation losses from the mock channel.

The maximum power level during twenty days operation for which cooling by natural convection of air will prevent metal temperatures from exceeding 1220° F is about 1300 kw.

Experimental data are plotted in Figure 1 and calculated metal temperatures after shutdown are plotted in Figure 7.

3.0 EXPERIMENTAL APPARATUS AND PROCEDURE

The experimental apparatus consisted of an electrically heated mock Fuel Assembly channel surrounded by a heated jacket, with appropriate instruments. The apparatus is shown in Figures 2, 3 and 4.

The mock channel was made of 0.033 inch stainless steel sheet formed into a rectangular tube 28½ inches long with nominal inside cross section 7/16 x 2 3/4 inches. The inside thickness of the channel, based on measurement at twenty-four locations, was 0.447 ± 0.008 inches. The length of the channel was divided into a 1 3/8 inch unheated section at the top, a 24 5/8 inch heated section, and a 2½ inch unheated section at the bottom. The lengths of the unheated sections were calculated to have the same fluid friction characteristics as the Fuel Assembly adapters, as shown in Appendix 5.1. The mock channel was heated by passing through it electric current from the low voltage secondary of a transformer energized by two 7.5 KVA variable auto-transformers.

The jacket was a piece of 5 inch standard steel pipe wrapped with asbestos tape impregnated with "Insa-Lute" cement to make a porcelain-like

[redacted]

Drawing # 6571

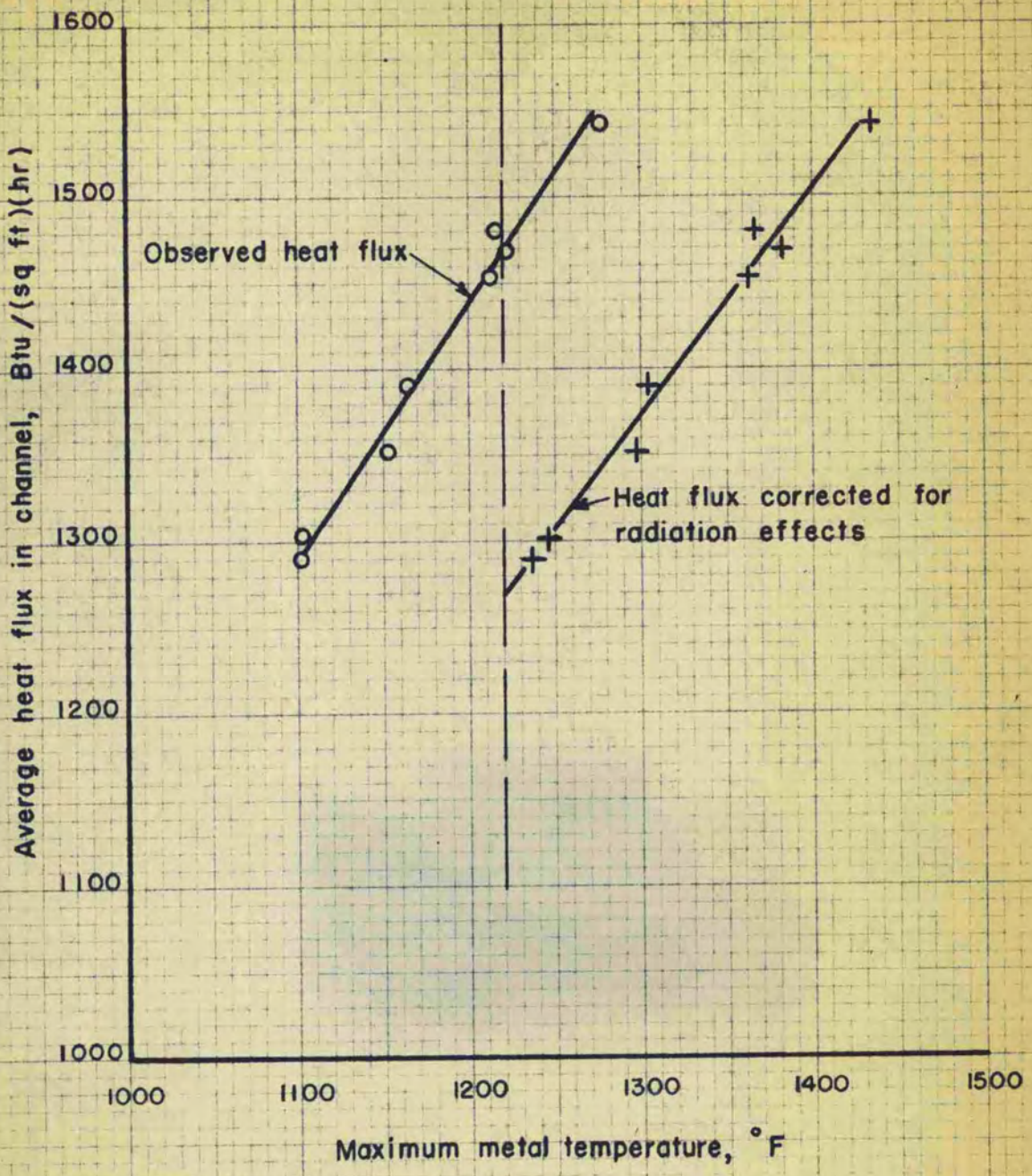

Figure 1. Heat Flux in Mock Channel

[redacted]

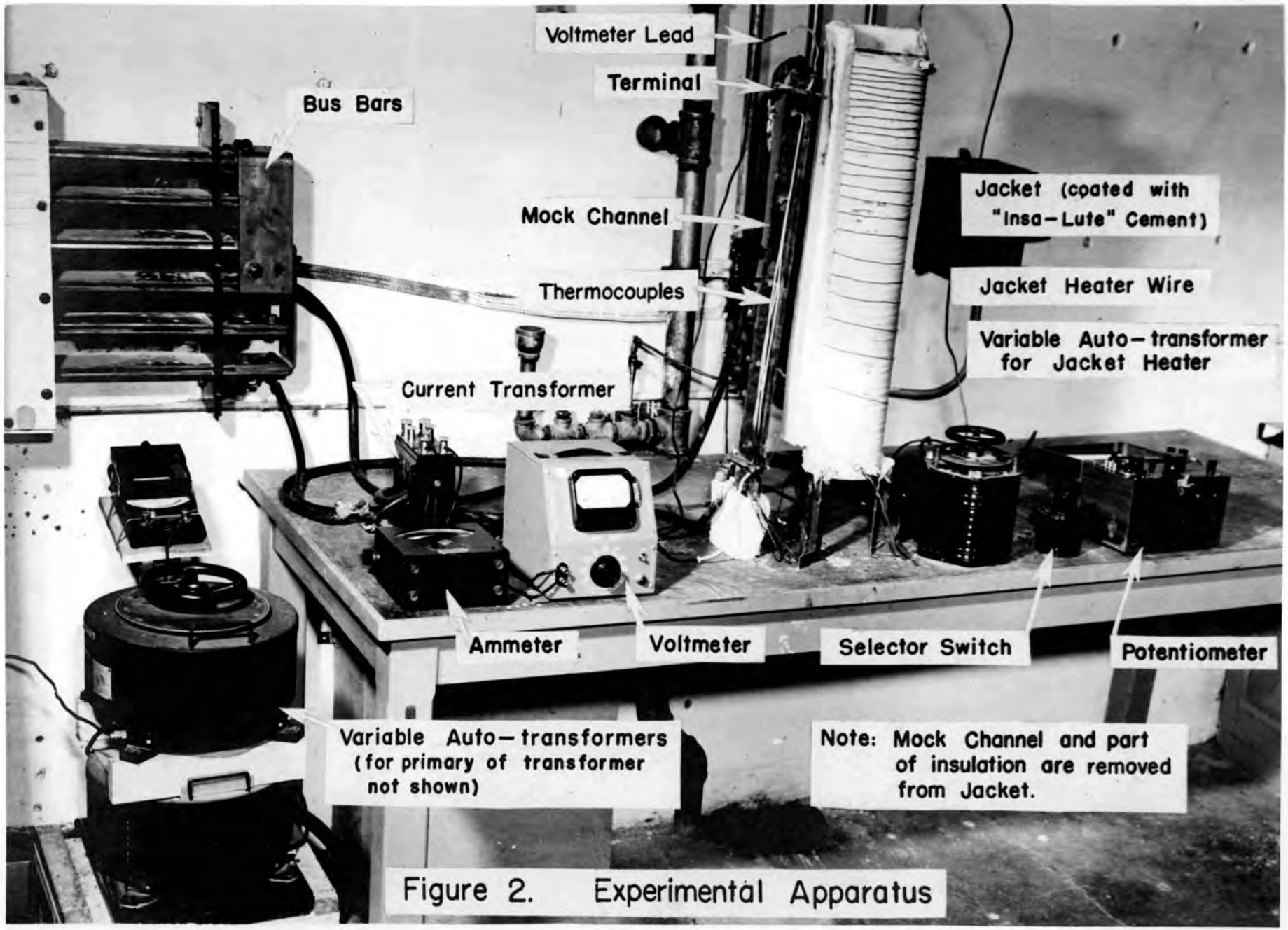

Figure 2. Experimental Apparatus

Drawing # [illegible]

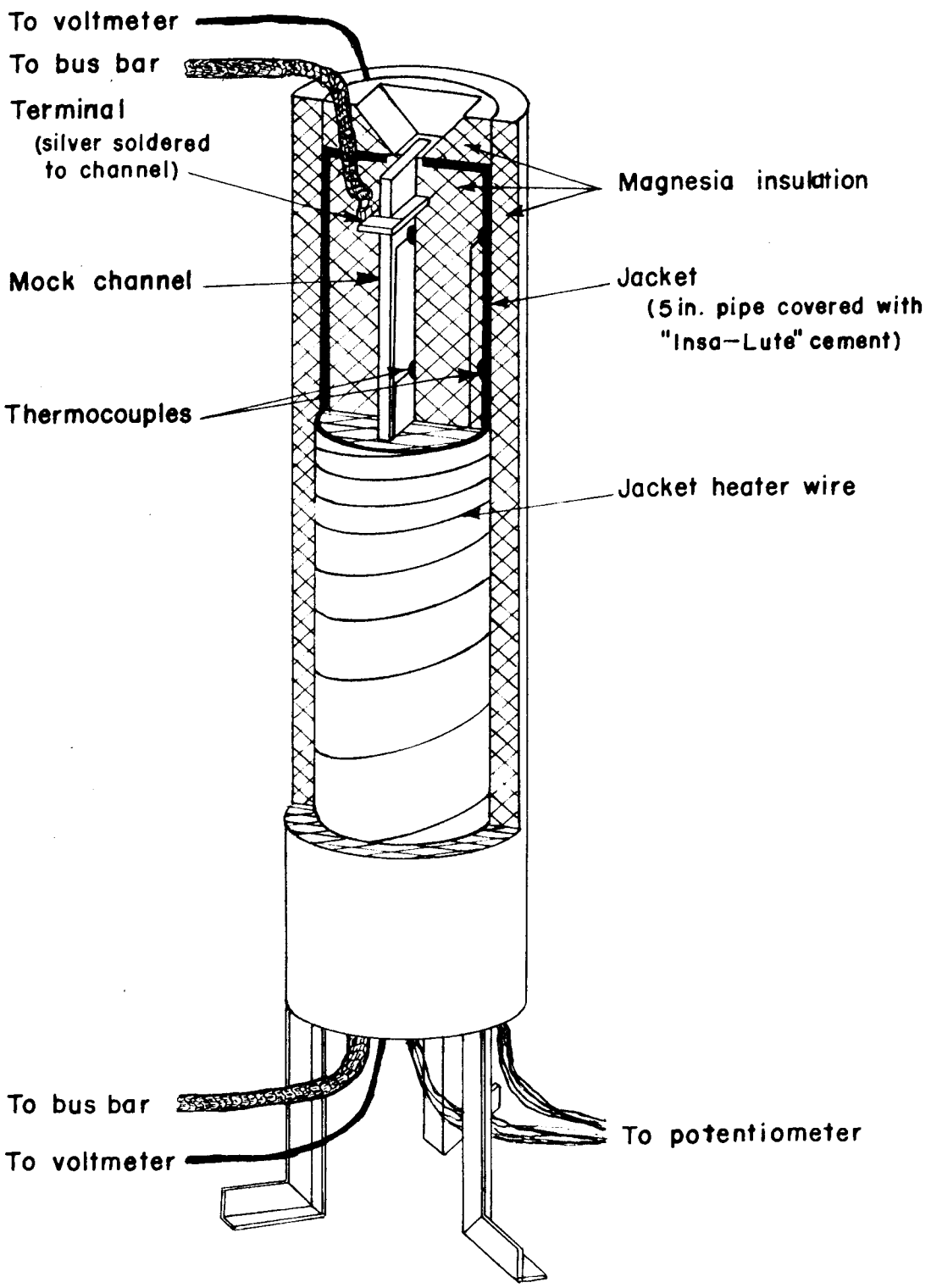

Figure 3. Mock Channel and Jacket

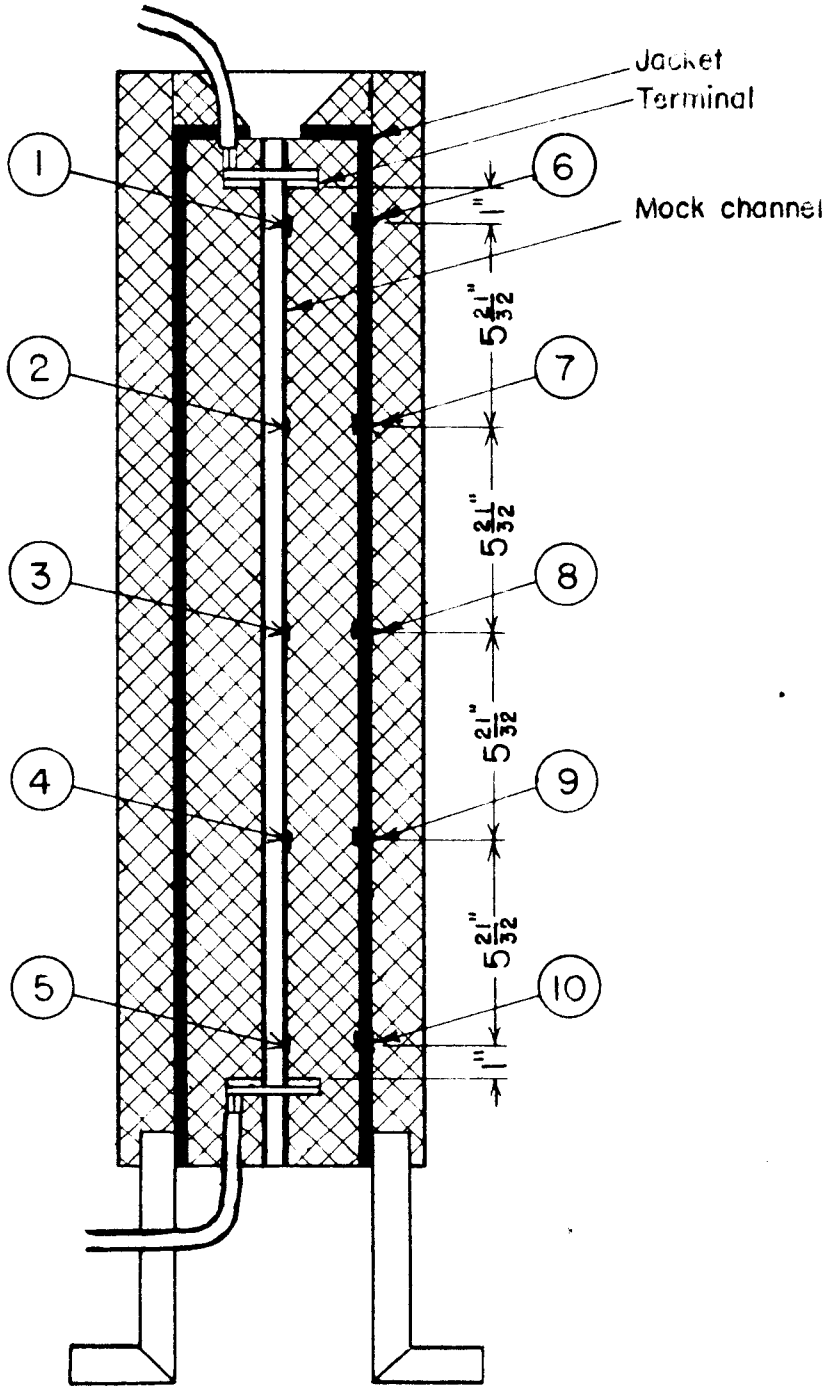

Figure 4. Location of Thermocouples

3.0 EXPERIMENTAL APPARATUS AND PROCEDURE (Con't).

coating. The jacket was heated by a resistance wire wrapped over the coating, using current from a 1.5 KVA variable auto-transformer. The windings of the resistance wire were spaced by trial and adjustment until the temperature distribution along the length of the jacket was nearly the same as that in the mock channel. The space between the mock channel and the jacket was filled with magnesia insulation, and the outside of the jacket was covered with a 1 inch layer of magnesia insulation.

Power input to the channel was determined by simultaneous measurement of current and voltage, using respectively an ammeter connected to a current transformer and a voltmeter connected to the terminals on the channel.

Temperatures were measured by iron-constantan thermocouples mounted against the outside surface of the channel and the inside surface of the jacket, respectively, and insulated from them by mica. Locations of the thermocouples are shown in Figure 4. Ambient air temperature was measured with a mercury thermometer.

For each test run the maximum channel and jacket temperatures were brought to predetermined values by adjustment of the corresponding power inputs, and then these temperatures were maintained for two hours, during which time power and temperature measurements were made every ten minutes. Typical data taken through two test periods are plotted in Figure 5. Since variations of power and temperature were small during the tests, arithmetic means of all values were used in the summary of data in Table 1. All tests were conducted during the 4 PM - 12 PM shift in order to avoid excessive air currents and disturbances of line voltages occurring in the laboratory during the day.

LUDEX BOOK COMPANY, INC., NORWOOD, MASSACHUSETTS.
PRINTED IN U.S.A.

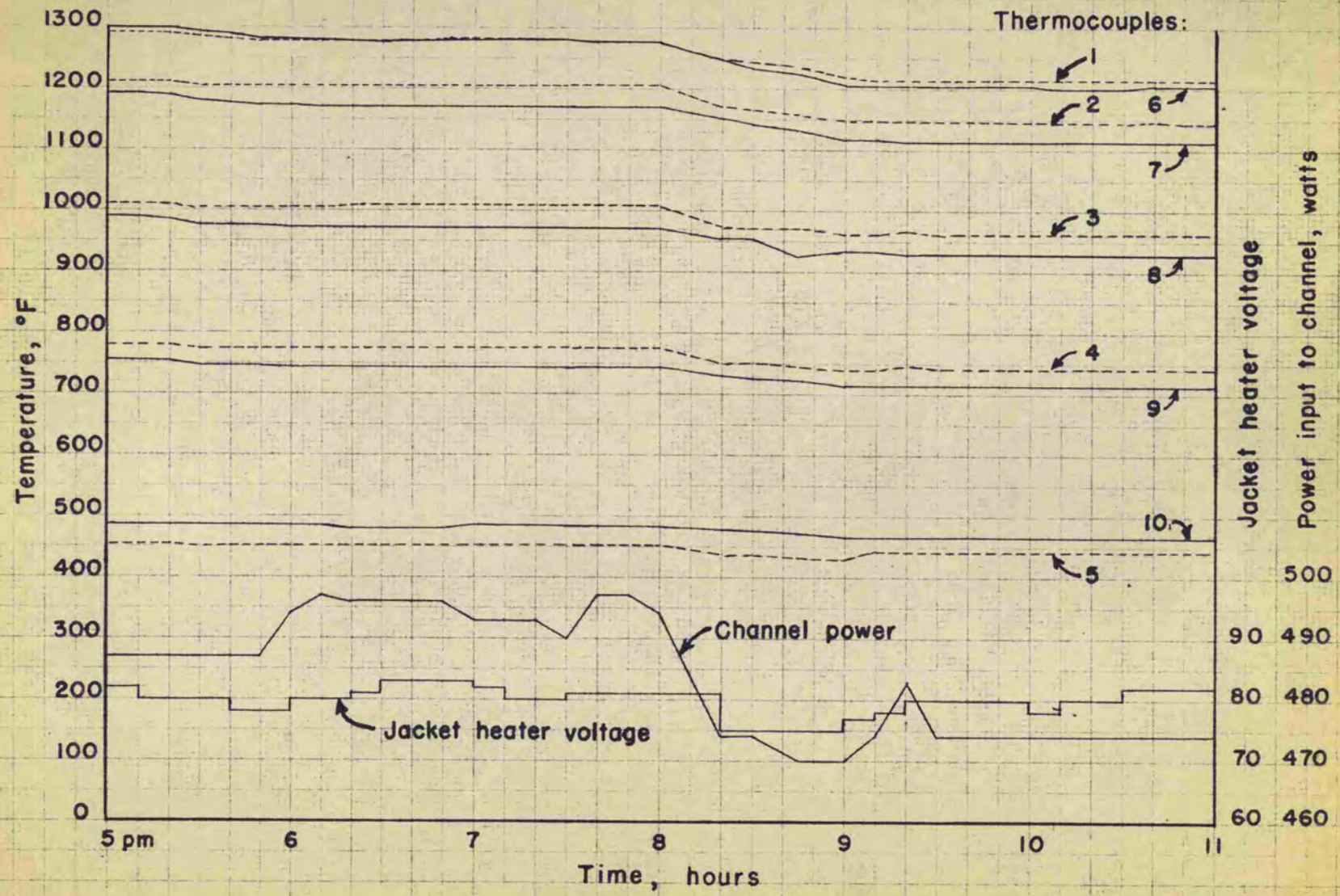

Figure 5. Typical Operation Chart
(Tests 7 & 8)

Drawing # 6574

[redacted]

TABLE 1
SUMMARY OF DATA

Test Number	1	2	3	4	5	6	7	8
Date	Oct. 5	Oct. 5	Oct. 6	Oct. 6	Oct. 7	Oct. 7	Oct. 8	Oct. 8
Time, PM	5-7	10-12	5:40-7:40	10-12	6-8	10-12	6-8	9-11
Power input, watts	471	418	434	414	466	446	495	475
Average heat flux, Btu/(sq ft)(hr)	1469	1303	1352	1290	1452	1390	1541	1480
Temperatures, °F								
Ambient air	80	75	83	73	75	81	80	73
Thermocouple 1	1221	1102	1152	1101	1213	1164	1279	1216
2	1160	1048	1092	1043	1143	1098	1204	1148
3	971	879	916	877	955	923	1008	962
4	749	682	712	683	733	711	775	741
5	434	395	420	402	421	419	451	442
6	1211	1081	1133	1085	1206	1144	1279	1204
7	1128	1016	1065	1018	1123	1070	1171	1114
8	939	853	898	859	926	896	971	929
9	717	657	696	664	718	690	744	715
10	462	429	462	444	465	456	483	467
Average temp. diff. between channel and jacket, °F	16	14	8	7	3	12	14	16
Maximum metal temp. extrapolated from Figure 6, °F	1382	1247	1299	1238	1364	1304	1435	1367

[redacted]

4.0 DISCUSSION

Although the convection characteristics of a Fuel Assembly channel were reproduced in the mock channel by duplication of fluid friction characteristics, the radiation and conduction characteristics differed considerably between the two systems. These differences prevent strict application of the mock channel results to the case of the prototype Fuel Assembly, and it is the purpose of this discussion to consider the effect of the differences between the two systems in order to establish upper and lower limits of the heat transfer capacity of the Fuel Assembly at a given maximum metal temperature.

A significant adjustment to be made is that caused by the difference of radiation characteristics, since the emissivity is about 0.8 for the mock channel and only about 0.1 to 0.2 for the Fuel Assembly. The radiation loss from the top of the mock channel results in depression of the metal temperature below the value that would exist if the entire heat transfer in the vicinity were by convection alone. This effect is of special importance because the maximum metal temperature, which occurs at the top of the channel, is the criterion in these experiments. Convection for depression of the metal temperature at the top of the channel may be accomplished by extrapolating to the top of the channel the temperature gradient between the second and third thermocouples from the top, as shown in Figure 6. Although this method results in over-convection, its simplicity justifies its use for this case. Radiation loss from the bottom of the channel is small, as shown in Appendix 5.2, and has no special significance. Radiant heat transfer from hot to cold parts of the mock channel also occurs, but this effect will be neglected, since it is similar to the effect of the greater longitudinal heat conduction in the prototype.

[redacted]

Drawing # 6575

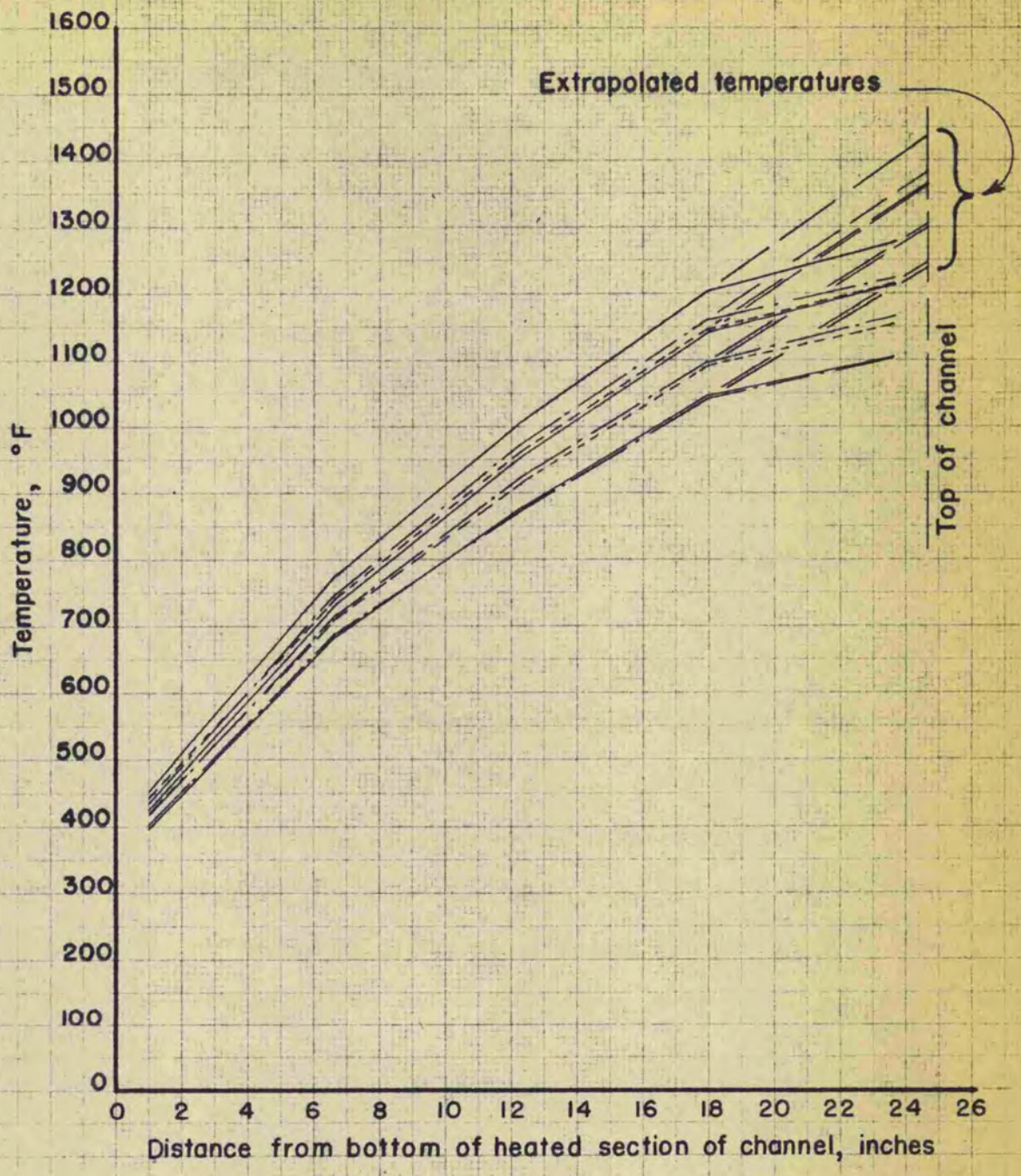

Figure 6. Correction of Observed Maximum Metal Temperatures for Radiation Effects

4.0 DISCUSSION (Con't.)

Conduction between the mock channel and the jacket is shown in Appendix 5.3 to be negligible.

The greater longitudinal conductance of the thick aluminum alloy plates of the prototype assembly will bring about a more uniform temperature distribution than was observed in the mock channel. Since the average heat flux in the channel is closely related to the average metal temperature, obviously the smaller the difference between the maximum and average temperatures the smaller will be the maximum temperature for a given average heat flux, so that differences of temperature distribution will not cause the heat transfer capacity of the prototype to be less than that of the mock channel. However, the maximum metal temperature is also closely related to the outlet air temperature, which will increase with average metal temperature because of the lower mass flow rate resulting from decreased density and increased viscosity, so that average heat transfer capacity is not highly sensitive to temperature distribution. Cursory consideration makes it appear unlikely that a correction for longitudinal conduction will be greater than the correction for radiation applied above. Since the calculation of such a correction would be very tedious, it is not considered feasible to establish closer limits of heat transfer capacity than an upper limit equivalent to the observed data and a lower limit resulting from application of temperature depression corrections based on radiation effects.

5.0 APPENDICES

5.1 Lengths of Unheated Mock Channel Sections

References: McAdams, "Heat Transmission", 2nd Ed.
Drawing TD-410, Revision 4, Fuel Assembly

Nomenclature:

- b width of mock channel, inches
- D equivalent diameter of conduit, inches
- f Fanning friction factor, dimensionless
- F pressure drop due to friction, inches head of fluid
- g gravitational conversion factor
- L length of conduit, inches
- n factor from Figure 54, p. 125, McAdams
- Re Reynolds modulus, dimensionless
- w mass flow rate of fluid, lb/hr
- y thickness of channel, inches
- μ viscosity of fluid, lb/(in)(sec)
- ρ density of fluid, lb/cu in

subscript a applies to adapter

subscript c applies to mock channel

It is the purpose of these calculations to select lengths of unheated mock channel sections having the same fluid friction characteristics as the Fuel Assembly adapters.

Equation 8a, p. 119, is used for estimation of friction in the adapters:

$$\frac{dF}{dL} = \frac{6.49\ fw^2}{2g\rho^2\ D^5}$$

5.1 (Con't.)

Viscous flow can be shown to exist in the adapter, so that

$$f = \frac{16}{Re} = \frac{16 \pi D \mu}{4w}$$

and

$$\frac{dF}{dL} = \frac{6.49\ (16)\pi\ D \mu w^2}{2(4)\ wg \rho^2\ D^5}$$

$$F_a = \int_0^{F_a} dF = \frac{40.7 \mu w}{g \rho^2} \int_0^{L_a} \frac{dL}{D^4}$$

For friction in the mock channel Equation 14, p. 124 is used:

$$\frac{dF}{dL} = \frac{4w \mu}{y^2 b^2 \rho^2\ g\ n}$$

$$\int_0^{F_c} dF = \frac{4w \mu}{y^2 b^2 \rho^2\ g\ n} \int_0^{L} dL$$

$$F_c = \frac{4w\ \mu L}{y^2 b^2 \rho^2\ g\ n}$$

The length of the channel is to be selected so that the friction losses will be equal. The Fuel Assembly is assumed to have six plates, with five channels each equal in thickness to the mock channel, so that

$$w_a = 5\ w_c$$

Physical properties will be the same for corresponding systems.

$$F_a = F_c$$

$$40.7\ \frac{\mu 5 w_c}{g \rho^2} \int_0^{L} \frac{dL}{D^4} = \frac{4\ w_c \mu L_c}{y^2 b^2 \rho^2 gn}$$

$$50.9 \int_0^{L_a} \frac{dL}{D^4} = \frac{L_c}{y^2 b^2 n}$$

[redacted]

5.1 (Con't.)

$$L_c = 50.9\ y^2 b^2 n \int_0^{La} \frac{dL}{D^4}$$

The adapters are simplified to the inside dimensions shown, with equivalent diameters calculated according to the formula

$$D = 4\ \frac{\text{cross section}}{\text{perimeter}}$$

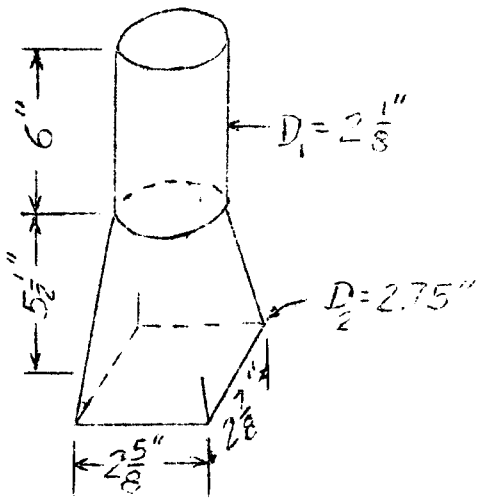

UPPER ADAPTER

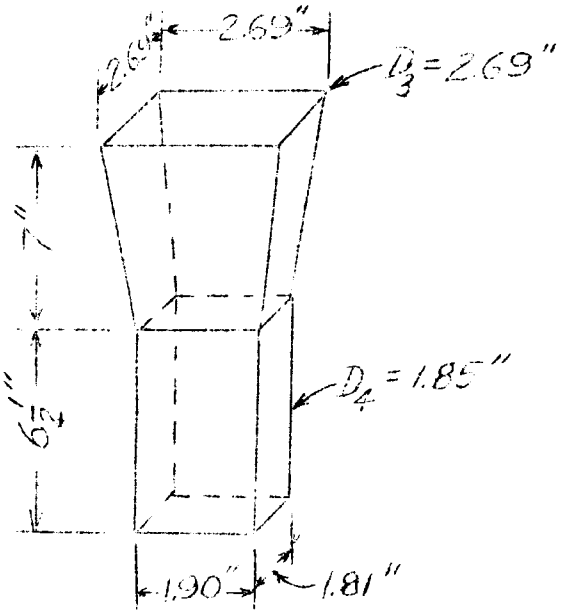

LOWER ADAPTER

The adapters will each be divided into two sections for integration. One section of each has constant diameter, and the diameter of the other section is a function of the variable length L from the constant diameter section.

5.1 (Con't.)

For the Upper Adapter,

$$D = 2.125 + \frac{L}{5.5}\ (2.75 - 2.125)$$
$$= 2.125 + 0.114\ L$$

For the Lower Adapter,

$$D = 1.85 + \frac{L}{7}\ (2.69 - 1.85)$$
$$= 1.85 + 0.12\ L$$

The dimensions of the channel are evaluated as follows:

$b = 2.75$ in

$y = 0.413$ in (assumed before channel was made)

$n = 0.045$ (from Fig. 54, p. 125, McAdams)

Then, for the Upper Adapter,

$$L_c = 50.9\ (0.413)^2(2.75)^2(0.045)$$
$$\left[\int_0^6 \frac{dL}{(2.125)^4} + \int_0^{5.5} \frac{dL}{(2.125 + 0.114\ L)^4}\right]$$
$$= 2.95\left\{\frac{6}{(2.125)^4} + \left[-\frac{1}{0.342(2.125 + 0.114L)^3}\right]_0^{5.5}\right\}$$
$$= 2.95\ (0.295 - 0.141 + 0.305)$$
$$= 2.95(0.459)$$
$$= 1.35 \text{ inches}$$

Similarly, the channel length with equivalent resistance to the Lower Adapter is

$$L_c' = 2.95\left[\int_0^{6.5} \frac{dL}{(1.85)^4} + \int_0^7 \frac{dL}{(1.85 + 0.12L)^4}\right]$$
$$= 2.50 \text{ inches}$$

[redacted]

5.1 (Con't.)

The mock channel was made with a 1 3/8 inch unheated section at the top and a 2 1/2 inch unheated section at the bottom.

5.2 Radiation from Ends of Mock Channel

Each end of the channel is assumed to be a black body with area equal to the cross sectional area of the channel and temperature equal to the nearest thermocouple reading. Heat transfer is calculated by the formula

$$q = 0.173 \; A_r \left[\left(\frac{T_c}{100}\right)^4 - \left(\frac{T_a}{100}\right)^4 \right]$$

with nomenclature

q heat transfer rate, Btu/hr

A_r area of radiating surface, sq ft

T_c temperature of channel, ^oR

T_a temperature of surroundings, ^oR

The area A_r is 0.00854 sq ft and the air temperature is about 80° F or 540 ^oR. Then

$$q = 0.173 \; (0.00854) \left[\left(\frac{T_a}{100}\right)^4 - \left(\frac{540}{100}\right)^4 \right]$$

$$= 0.00148 \; \frac{T_c}{100}^4 - 0.86$$

Heat transfer rates for various channel temperatures are tabulated below. The right hand column gives values of q/A_c, the heat flux based on the total heated surface of the channel, for comparison with the **total** average heat flux.

5.2 (Con't.)

Channel Temp °F	T_c	$\left(\frac{T_c}{100}\right)^4$	$q + 0.86$	q	q/A_c
395	855	5350	7.9	7.0	6.4
420	880	6000	8.9	8.0	7.3
440	900	6560	9.7	8.8	8.0
450	910	6850	10.1	9.2	8.4
1100	1560	59200	87.4	86.5	79.1
1160	1620	68800	101.6	100.7	92.0
1220	1680	79500	117.2	116.3	106.3
1280	1720	87000	128.4	127.5	116.5

It is seen that the loss from the bottom of the channel is about 0.5 per cent the average heat flux and the loss from the top of the channel is from 6 to 7.5 per cent of the average heat flux.

5.3 Heat Conduction between Mock Channel and Jacket

Heat conduction based on the heated area of the channel is calculated by the formula

$$\frac{q}{A} = \frac{k}{L}\frac{A}{A_c}\Delta t$$

with nomenclature

q/A heat flux based on heated surface of channel, $\frac{\text{Btu}}{(\text{sq ft})(\text{hr})}$

A_c heated surface of channel, sq ft

k thermal conductivity of insulation between channel and jacket, $\frac{(\text{Btu})(\text{ft})}{(\text{sq ft})(^\circ\text{F})(\text{hr})}$

A mean cross sectional area of heat flow, sq ft

L mean length of heat flow, ft

Δt temperature difference between channel and jacket, °F

5.3 (Con't.)

Arithmetic means are used in evaluating A and L.

Perimeter of channel $2(0.45 + 2.75)/12 = 0.533$ ft

Perimeter of jacket (inside) $15.86/12 = 1.322$ ft

Arithmetic mean 0.928 ft

A/A_c $0.928/0.533 = 1.74 \frac{\text{sq ft}}{\text{sq ft}}$

Minimum L $(5.05 - 2.75)/(2)(12) = 0.096$ ft

Maximum L $(5.05 - 0.45)/(2)(12) = 0.192$ ft

Arithmetic mean 0.144 ft

k of 85% magnesia, approximately 0.050 $\frac{(\text{Btu})(\text{ft})}{(\text{sq ft})(^\circ\text{F})(\text{hr})}$

$$\frac{q}{A} = \frac{0.050}{0.144}(174)\ \Delta t$$

$$= 0.60\ \Delta t \quad \text{Btu/(sq ft)(hr)}$$

The greatest observed average Δt was 16 °F, so that the greatest heat flux by conduction between the jacket and the channel was

$$\frac{q}{A} = 0.60\ (16)$$

$$= 9.6 \text{ Btu/(sq ft)(hr)}$$

This is about 0.7 per cent of the total average heat flux.

5.4 Dimensions of Mock Channel

Overall length	28 1/2 inches
Heated length	24 5/8 inches
Length of upper unheated section	1 3/8 inches
Length of lower unheated section	2 1/2 inches
Inside width	2 3/4 inches
Inside thickness (measured at twenty-four locations)	0.447 ± 0.008 inches
Thickness of metal	0.033 inches
Inside cross section (0.447)(2.75)/144 =	0.00854 sq ft
Inside heated surface 2(0.447 + 2.75)(24.625)/144 =	1.093 sq ft

5.5 Temperature Rise in Fuel Assemblies After Shutdown

References:

1. Memorandum, J. R. Huffman to File, Subject: "Heterogeneous Pile -1000 Project - Design Data Sheets", June 1, 1948, Central Files No. 48-6-68.

2. Memorandum, J. R. Huffman to File, Subject: "Cooling After Shutdown", June 7, 1948, Central Files No. 48-6-155.

3. Memorandum, J. A. Lane to File, Subject: "Cooling After Shutdown - Supplement", October 22, 1948, Central Files No. 48-10-263.

Nomenclature:

A Area of heat transfer surface of Fuel Assembly, sq ft

A_o Area of heat transfer surface of normal 18-plate Fuel Assembly, sq ft

c Specific heat, Btu/(lb)(^oF)

M,N Constants

5.5 Temperature Rise in Fuel Assemblies After Shutdown (Con't.)

Nomenclature (Con't.)

- n Number of plates in Fuel Assembly
- P Power level of reactor during operation, kilowatts
- Q Quantity of heat, Btu
- q Rate of heat flow, Btu/hr or Btu/sec
- R Reduction factor, ratio of power generated in reactor after shutdown to operating power level
- T Temperature, ^{o}F
- t Time after shutdown, seconds
- W Weight, pounds

Consider an element of volume of a Fuel Assembly plate, together with its associated area through which heat is transferred from the element. The weight and area of the element are related by the constant surface density $dW/dA = W/A$. Since Fuel Assemblies for the Low Power-High Flux Reactor may be designed with any number of plates per assembly and containing the same weight of active material as a normal Fuel Assembly with 18 plates, the areas will be related

$$A = \frac{n}{18} A_o \qquad (1)$$

and the surface densities

$$\frac{W}{A} = \frac{18}{n} \frac{W}{A_o} \qquad (2)$$

A heat flow rate balance in the element is

$$dq_{sensible} = dq_{generated} - dq_{out}$$

5.5 Temperature Rise in Fuel Assemblies After Shutdown (Con't.)

and dividing by the area of the element,

$$\frac{dq_{sensible}}{dA} = \frac{dq_{generated}}{dA} - \frac{dq_{out}}{dA} \qquad (3)$$

The sensible heat change based on the area of the element is

$$\frac{dQ}{dA} = c\,\frac{dW}{dA}\,dT \qquad (4)$$

$$= c\,\frac{18W}{nA_o}\,dT \qquad (5)$$

Since $q = \frac{dQ}{dt}$,

$$\frac{dq}{dA} = c\,\frac{18W}{n\,A_o}\,\frac{dT}{dt} \qquad (6)$$

The flow rate of heat transferred from the element is based on the value of the lower limit of the experimental range, and the rate is assumed to be proportional to the temperature difference between the element and its surroundings. This assumption is approximate in the experimental range, and the nature of the function is not very significant at lower temperatures.

$$\frac{dq}{dA} = M\,(T-T_S) \qquad (7)$$

At $T = 1220\ ^{o}F$ and $T_S = 80\ ^{o}F$, $dq/dA = 1270$ Btu/(sq ft)(hr)
Including a conversion to seconds,

$$\frac{dq}{dA} = 0.00031\,(T-T_S)\ \text{Btu/(sq ft)(sec)} \qquad (8)$$

5.5 Temperature Rise in Fuel Assemblies After Shutdown (Con't.)

The heat generation within the element is developed by the method shown by Lane (p. 1, Ref. 3) using the reduction factors given by Huffman (Fig. 1, Ref. 2):

$$\frac{dq}{dA} = NPR \tag{9}$$

$$dA = \frac{n}{18}\, dA_o \tag{10}$$

$$\frac{dq}{dA_o} = \frac{n}{18}\, NPR \tag{11}$$

During operation, R = 1, and maximum dq/dA_o = 630,000 Btu/(sq ft)(hr) at P = 30,000 kw.

$$N = \frac{18}{nPR}\,\frac{dq}{dA_o} = \frac{18(630{,}000)}{(30{,}000)(3600)}\,\frac{1}{n} \tag{12}$$

$$= 0.105\,\frac{1}{n}\ \text{Btu/(sq ft)(kw)(sec)} \tag{13}$$

$$\frac{dq}{dA} = 0.105\,\frac{PR}{n}\ \text{Btu/(sq ft)(sec)} \tag{14}$$

Equations 6, 8 and 14 may be substituted in Equation 3.

$$\frac{18\ c\ W\ dT}{n\ A_o\ dt} = 0.105\,\frac{PR}{n} - 0.00031\ (T-T_S) \tag{15}$$

$$\frac{dT}{dt} = \frac{n\ A_o}{18\ c\ W}\left[0.105\,\frac{PR}{n} - 0.00031\ (T-T_S)\right] \tag{16}$$

Defining $\Delta T = T-T_S$, it is seen that

$$d(\Delta T) = dT \tag{17}$$

5.5 Temperature Rise in Fuel Assemblies After Shutdown (Con't.)

So that

$$\frac{d(\Delta T)}{dt} = \frac{nA_o}{18c\ W}\left[0.105\ \frac{PR}{n} - 0.00031\ \Delta T\right] \qquad (18)$$

Constants are evaluated as follows:

$n = 6$ (corresponds to experimental channel)

$c = 0.226$ Btu/(lb)(^oF)

$$W/A_o = \frac{2270\ gm}{14045\ sq\ cm} \times \frac{1\ lb}{454\ gm} \times 930\ \frac{sq\ cm}{sq\ ft} = 0.332\ lb/sq\ ft$$

The temperature of the element at shutdown ($t = 0$) is assumed to be 200 ^oF.

$$T = \Delta T + T_S = \Delta T + 80 \qquad (19)$$

$$\frac{d(\Delta T)}{dt} = \frac{6}{18\,(0.226)(0.332)}\left[\frac{0.105}{6}\ PR - 0.00031\ \Delta T\right] \qquad (20)$$

$$\frac{d(\Delta T)}{dt} = 0.0777\ PR - 0.00138\ \Delta T \qquad (21)$$

If R is expressed approximately as a power function of t this differential equation may be solved analytically. However, the solution contains a power series which converges slowly for values of t greater than 100, so that an approximate solution by increments is most convenient. The solution of this type is

$$\Delta(\ \Delta T) = (0.0777\ PR - 0.00138\ \Delta T)\ \Delta t \qquad (22)$$

5.5 Temperature Rise in Fuel Assemblies After Shutdown (Con't.)

Computations are not shown here, but temperatures as a function of time for three values of *P* are plotted in Figure 7. Results are summarized as follows:

Power level during operation, kw	1000	1300	1500
Maximum temperature, °F	933	1153	1355

Maximum temperature occurs between 1300 and 1400 seconds after shutdown.

The maximum power level during operation for which cooling by natural convection of air after shutdown will prevent metal temperatures from exceeding 1220 °F is about 1300 kw.

W K Stromquist
W. K. Stromquist

January 6, 1949
Date

WKS:tks

[redacted]

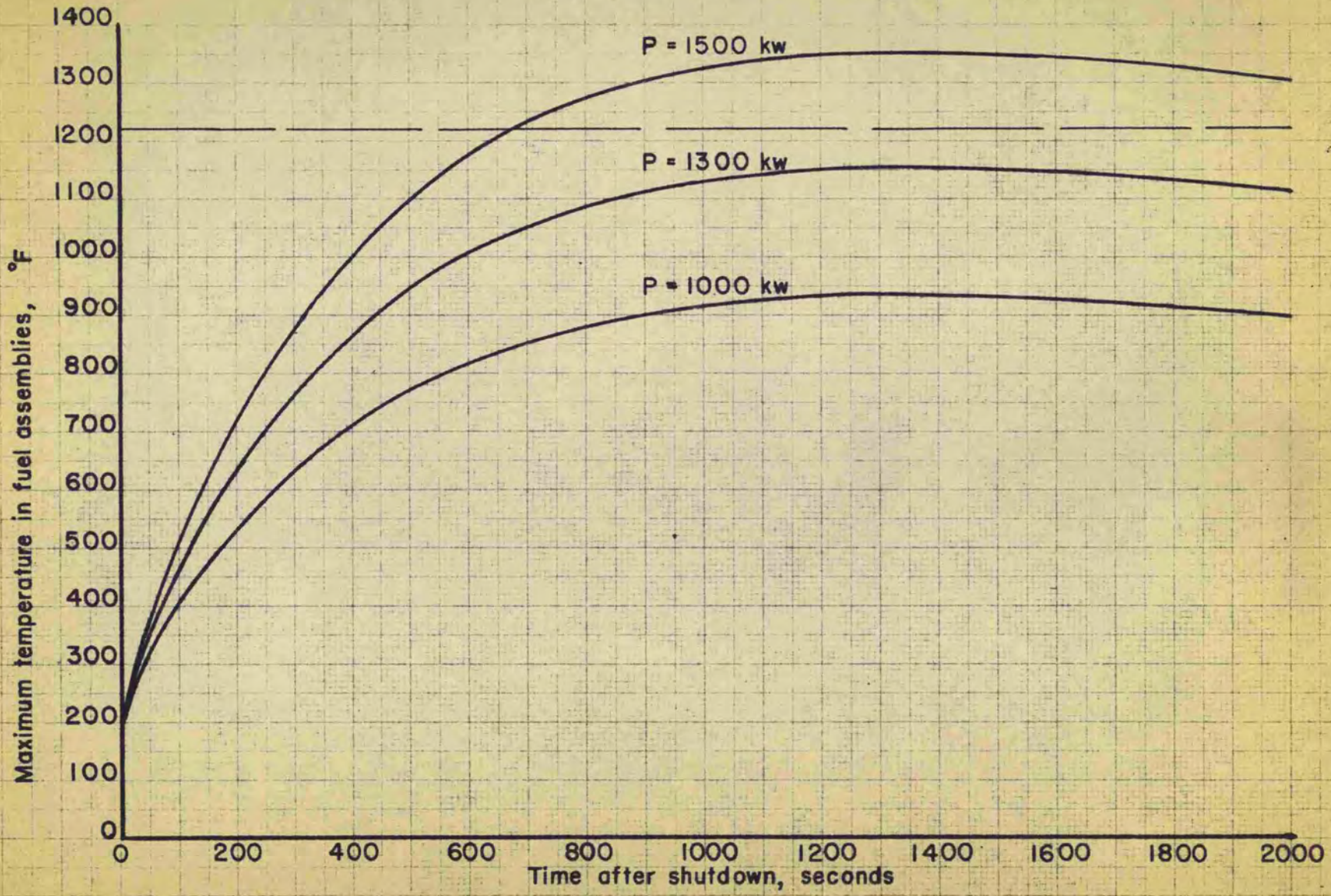

Figure 7. Temperature Rise in Fuel Assemblies after Shutdown

(Six-plate assemblies cooled by natural convection of air after operation for 20 days at indicated power level)

Drawing # 6576