[redacted]

MARTIN MARIETTA ENERGY SYSTEMS LIBRARIES
3 4456 0360373 1

ORNL 238
CHEMISTRY-SEPARATION PROCESSES FOR URANIUM

CENTRAL RESEARCH LIBRARY
DOCUMENT COLLECTION
LIBRARY LOAN COPY
DO NOT TRANSFER TO ANOTHER PERSON
If you wish someone else to see this document, send in name with document and the library will arrange a loan.

POWER PILE DIVISION

RECOVERY OF URANIUM FROM GRAPHITE SHAPES BY ELECTROLYTIC GRAPHITE DISINTEGRATION IN NITRIC ACID

L.W. FROMM

[redacted]

OAK RIDGE NATIONAL LABORATORY

OPERATED BY
CARBIDE AND CARBON CHEMICALS CORPORATION
FOR THE
ATOMIC ENERGY COMMISSION
POST OFFICE BOX P
OAK RIDGE, TENNESSEE

[redacted]

[redacted]

ORNL # 238

This document consists of 25 pages.

Copy 8 of 90, Series A.

ISSUED: Training School Lib.

Contract No. W-7405, eng 26

POWER PILE DIVISION

RECOVERY OF URANIUM FROM GRAPHITE SHAPES BY ELECTROLYTIC GRAPHITE DISINTEGRATION IN NITRIC ACID

L. W. Fromm

DECLASSIFIED

CLASSIFICATION CHANGED TO:

BY AUTHORITY: TID-1148

BY: E. Morrison 7/9/52

DATE ISSUED: FEB 24 1949

OAK RIDGE NATIONAL LABORATORY
OPERATED BY
Carbide and Carbon Chemicals Corporation
for the
Atomic Energy Commission
Post Office Box P
Oak Ridge, Tennessee

[redacted]

MARTIN MARIETTA ENERGY SYSTEMS LIBRARIES
3 4456 0360373 1

This do
transmi
prohib
RESTRI
This d
defined

[redacted]

[redacted]

TABLE OF CONTENTS

	ABSTRACT	4
I.	INTRODUCTION	6
II.	INITIAL EXPERIMENTATION ON DISINTEGRATION	7
III.	URANIUM RECOVERY TESTS	10
IV.	DEVELOPMENT OF MASS TREATMENT APPARATUS	18
V.	SUGGESTIONS FOR FURTHER WORK	22
	REFERENCES	25

[redacted]

[redacted]

This d[redacted]ts
transm[redacted]
prohibi[redacted].

RESTRIC[redacted]
This d[redacted]
defined[redacted]

[redacted]

A B S T R A C T

During the course of another investigation it was found that a sample of graphite disintegrates into particles of sizes ranging from almost colloidal up to sizable chunks when the sample is connected as the anode in an oxidizing solution with an inert cathode. Literature references attribute this phenomenon to the expansion of gas in the interlaminary spaces of the graphite and to the formation of an unstable graphitic oxide. The latter was verified somewhat by our experiments; in seven of eight runs the filtered and dried disintegrated graphite particles weighed from 0.9 to 2 percent more than the original sample piece. Investigation of particle size as a function of current density showed that a much more uniform product resulted at high current densities, because the action was largely confined to the surface; at low current densities internal action resulted in the splitting off of large sections of the sample. The geometric mean particle diameter for a current density of 4.8 amps/cm.^{2} was calculated to be 236 microns on a weight basis and 69 microns on the basis of particle count. Four runs were made in a single sample test apparatus using natural uranium impregnated graphite samples 2 cm. in diameter by 5 cm. long, containing an estimated 12 to 15 percent uranium by weight, and a maximum recovery efficiency of 99.79 percent of the original uranium by weight was achieved during the disintegration process. Three concentrated nitric acid leaches increased this efficiency to 99.98 percent. After the leaches the graphite residues contained approximately 50 parts per million by weight of uranium. Development work was carried out in order to determine the adaptability of the process to mass treatment of spent fuel units. A method whereby samples were stacked end to end in a vertical tank was found to be successful. By making the electrodes and leads into the bath of tantalum, the essentially unidirectional current conducting property of the surface oxide of tantalum was utilized, with the result that rectification of alternating to direct current occurred within the bath, and the need for external rectifiers or other sources of direct current was eliminated. A suggested design for a production model of the stack type apparatus is given and its operation explained. One recovery run was made in the stack type apparatus using three natural uranium impregnated graphite samples, each 2 cm. in diameter by 5 cm. long, averaging 14 percent uranium by weight. At a current density of 3.2 amps/cm.^{2}, the samples were completely disintegrated in 70 minutes, and the resulting powder was subjected to five leaches with boiling

[redacted]

This do[redacted]
transmi[redacted]
prohibi[redacted]

RESTRI[redacted]
This do[redacted]
define[redacted]

[redacted]

concentrated nitric acid; analyses showed that the uranium concentration in the residue reached 55 parts per million after the third leach and that further leaching was of little or no value. On the basis of these data and known facts regarding leaching and burning processes, it is postulated that if a spent fuel unit containing 2 percent UO_2 were subjected to electrolytic disintegration and three leaches of boiling concentrated nitric acid, all but about 0.3 percent of the original uranium would be recovered in the form of the nitrate in nitric acid solution. Furthermore, if the graphite residue were then burned and the ash leached with nitric acid, fused with sodium hydroxide, and releached, the overall losses in the combined process could be held to less than 0.001 percent of the original uranium.

[redacted]

[redacted]

I. INTRODUCTION

In connection with the development work carried out by the Power Pile Division on the Daniels High Temperature Gas Cooled Power Pile, one of the materials contemplated for use as a fuel carrier was graphite. Since the order of magnitude of the depletion to which the pile fuel elements would be run before reprocessing was estimated to be no more than 10 percent (1,2), it was essential that a process be developed for the efficient recovery of the unused fissile material from the depleted fuel elements. In a report surveying possible processes (2), H. K. Jackson recommended that the most promising method was similar to that used at Y-12 for recovery of uranium^{235} from graphite parts in the electromagnetic separation process, involving burning of the parts in oxygen, leaching of the ash with hot nitric acid, fusion of the residue with sodium hydroxide, and releaching with nitric acid. In the Y-12 process the uranium content of the insoluble residue after the fusion product leach is 50-100 parts per million. However, literature searches and numerous personal conversations revealed that the Y-12 process was primarily born of war-time haste and that very little data was available concerning optimum conditions for burning and leaching. Consequently a research program to determine experimentally the effects of various factors upon the burning and leaching processes was initiated as part of the Power Pile effort.

In November, 1947, during the course of an investigation in the electro-plating of graphite with chromium, J. R. Humphreys and H. E. Robertson noted that an 80-gram hollow cylindrical graphite sample connected as the anode in a plating bath containing chromic and sulfuric acids lost 18 grams during an eight hour pass of 5 amps at 1.8 volts with the bath at 22°C. Several preliminary tests using chromic acid and nitric acid baths indicated that a sample of graphite could be completely disintegrated into particles ranging from the colloidal up to large flakes and chunks by connecting it as the anode in an oxidizing bath with a platinum cathode. It was immediately apparent that this phenomenon might provide a simple solution to the recovery problem, and the research program was revised to include and emphasize further investigation.

A literature search revealed that the phenomenon of the swelling and disintegration of graphite anodes in solutions containing oxidizing ions has been known for some time, although there is considerable confusion as to the mechanism of the process. Thiele (3) has performed tests on natural graphites suspended in fuming sulfuric acid, concentrated nitric acid, and concentrated

[redacted]

perchloric acid, and in each case observed increases in both volum[redacted]y and a series of color changes in the order: blue, indigo, violet, red, orange, yellow, and gray in reflected light; the colors were different in transmitted light. The process was reversible and appeared to involve slight separation of the layers of graphite comprising the crystal, resulting in the setting up of interference bands. Amorphous carbons, viz. sugar carbon, did not swell under such treatment. In concentrated sulfuric, concentrated nitric, and 30 percent perchloric acids and in liquid bromine, swelling and color changes of a graphite anode occurred with 2 volts impressed, and the process reversed when the voltage was removed. Thiele believes that in these cases (except for bromine) an unstable graphitic oxide is formed. He found that no swelling occurred in solutions of halogens or halides. In a later article (4), the same author sums up by attributing the swelling of graphite to expansion of gas in the interlaminary spaces. Still later work by Thiele (5) showed that mechanical disintegration of carbon anodes due to swelling of graphitic carbon occurred when oxygen was evolved at a potential of 1.6 volts in the presence of $SO_4^{=}$, ClO_4^-, NO_3^-; or F^- ions with a sufficient current density (A figure of 0.03 amps/cm.^{2} is given.) and in the absence of water.

The conclusion of Thiele regarding the graphitic oxide formation is supported by Brown and Storey (6), who were interested in a commercial process for obtaining graphitic oxide for use in dry cells. They claimed that the electrolysis of a graphite anode in a neutral or acid bath containing an oxygen-bearing ion forms graphitic oxide. They found the best electrolyte for their process to be a mixture of 1.42 specific gravity nitric acid and water in the proportion 4:1 at 22 to 25°C with the addition of ClO_3^-, CrO_4^-, $SO_4^{=}$, or Cr_2O_3. The resulting product contains 10 to 11 percent of available oxygen (determined by the ferrous sulfate method) when a current density of 1.08 amps/dm^2 is used. Practically no corrosion of the anode occurred in dilute nitric acid at temperatures over 60°C. It was also found that pre-impregnation of the anodes with paraffin resulted in more uniform and finer sized product particles, since the corrosion then occurred only on the surface of the anode instead of internally. In this case nearly all the product passed through a 20-mesh secreen (7.9 mesh/cm.) and 95 percent passed through a 60-mesh screen (23.6 mesh/cm.).

II. INITIAL EXPERIMENTATION ON DISINTEGRATION

Preliminary experiments with different designs of sample holders showed that the ideal holder for the 2 cm. diameter by 5 cm. long solid cylindrical

[redacted]

[redacted]

samples to be used consisted of a glass tube 1 inch in diameter and $3\frac{1}{2}$ inches long closed at the lower end and supported from above by glass rods. A platinum wire passed down into the tube along the wall and terminated at the bottom in a horizontal spiral upon which the sample rested; this wire was insulated throughout its length (except for the spiral) by enclosing it in fine glass tubing. The platinum wire cathode was coiled around the outside of the 1-inch tube for the sake of compactness. The entire assembly was mounted at the top to a standard ground glass taper fitting in such a way that it could be suspended within a 2-liter round-bottom flask so that the liquid level in the flask was about $\frac{1}{2}$ inch above the top of the 1-inch tube containing the sample. Figure 1 is a drawing of this apparatus.

A total of seven successful runs were made in this apparatus to determine the effect of current density on the weight of graphite recovered as disintegrated particles and on the particle size. In these runs no external heat was applied, but the baths were heated by the dissipation of power incident to the passing of the current. In most cases the baths reached the boiling point by the end of the run. One run was made with the bath boiling throughout the run in order to determine the effect of the boiling action. The general procedure was as follows:

The sample was dried, weighed, and placed in the apparatus. The flask was filled to the necessary level (about $\frac{1}{2}$ inch above the top of the sample holder tube) with fresh concentrated nitric acid (about 15 N or 70 percent by weight), and the desired current was passed until the sample was completely disintegrated. This time varied from 9 minutes for a 15-amp run (4.8 amps/cm.^{2}) to 95 minutes for a 2.5-amp run (0.8 amp/cm.^{2}). The entire bath was then filtered quantitatively and the graphite particles dried and weighed. A screen analysis by weight was made of the particles, using 30-, 40-, 60-, 80-, and 100-mesh screens. Since with the sample holder used virtually all of the action took place on the upper end surface of the sample, the end area of 3.14 cm.^{2} was used in calculating current densities.

A literature search (7,8,9,10,11) yielded the following method of calculating mean particle diameters from screen analyses. When the cumulative percent undersize is plotted against the logarithm of the particle size on logarithmic-probability paper a straight line results. The value for particle size corresponding to 50 percent undersize is the geometric mean particle diameter, M'_g. The slope of this line is called the standard deviation, S_g, and constitutes a measure of the uniformity of the sample. (For a perfectly uniform sample, $S_g = 0$.) The geometric mean particle diameter on the basis of particle count,

[redacted]

[redacted]

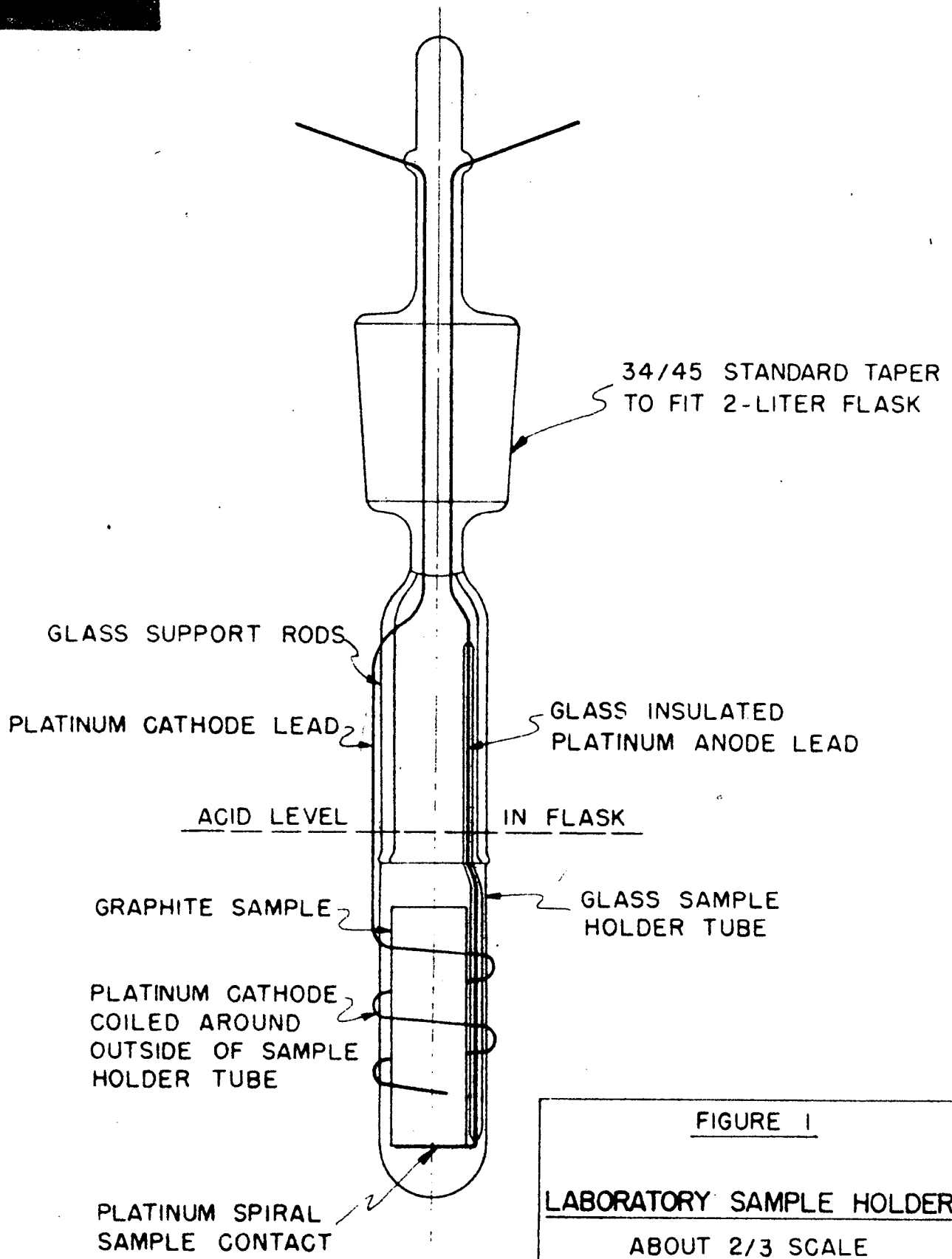

FIGURE 1

LABORATORY SAMPLE HOLDER

ABOUT 2/3 SCALE

JANUARY 3, 1949 Dr 6647

[redacted]

[redacted]

M_g, may be calculated by inserting values of M'_g and S_g in the equation (10):

$$\text{Log } M_g = \log M'_g - 6.9078 \log^2 S_g \quad .$$

Table I gives for each of the eight runs the weight of the disintegrated particles, expressed as a percent of the original sample weight, the geometric mean diameters on weight and particle count bases, and the standard deviation. For ease of comparison the runs are arranged in order of descending current densities. Run E-6 is kept separate from the others as it was boiled throughout. Average values for the geometric mean diameters and for the standard deviations are given for the two 15-amp runs E-1 and E-5 and for the two 5-amp runs E-3 and E-4.

The data for graphite recovery percentage given in Table I show that within the studied range graphite recovery is not measurably affected by variations in current density. The slight increase in weight in every case except Run E-6 seems to support the theory of graphitic oxide formation. The boiling of Run E-6 may have caused a further oxidation of the graphitic oxide to one of the gaseous oxides of carbon, with resulting loss in weight.

Only the most general conclusions may be drawn from the calculated data on particle size. A basic assumption in the calculations is that the particle size distribution is a probability function, and in this case there is no firm basis for making the assumption. Mere visual inspection of the resulting particles from Run E-10 shows that there is a definite break in the distribution, as there are a large number of chunks over 1/8 inch in the longest dimension. The last column in the table, showing the weight percent of the sample under 500 microns in size, also points outs the inaccuracies in screen data for the low current density runs, since the largest screen used had a mesh of about 600 microns (30-mesh). However, the data for geometric mean diameter on a weight basis does show a tendency toward larger average particles as current density decreases, and the standard deviation data definitely shows an improvement in uniformity for higher current densities. These two conclusions are supported by visual and microscopic inspection of samples.

III. URANIUM RECOVERY TESTS

Four runs, using three different procedures, were made in the apparatus shown in figure 1 on graphite samples impregnated with UO_2 (natural) by uranyl nitrate hexahydrate vacuum impregnation, rapid drying, and firing in inert atmos-

[redacted]

TABLE I

RUN NO.	CURRENT (amp)	CURRENT DENSITY (amp/cm^2)	GRAPHITE RECOVERY (percent)	GEOMETRIC MEAN DIAMETER		STANDARD DEVIATION	WEIGHT PERCENT UNDER 500 MICRONS
				BY WEIGHT (microns)	BY COUNT (microns)		
E-1	15	4.8	100.90	236	69	1.98	87
E-5	15	4.8	101.06				
E-2	10	3.2	101.13	297	81	2.02	79
E-9	7.5	2.4	102.12	307	58	2.20	74
E-3	5	1.6	101.35	394	12	3.16	58
E-4	5	1.6	100.93				
E-10	2.5	0.8	101.04	1200	0.048	7.06	33
E-6 (Boiled)	5	1.6	98.04	216	1.35	3.99	75

- 35 mesh

[redacted]

phere (12). The samples were supplied by I. C. Tinney and were estimated to contain 12 to 15 percent uranium metal by weight. The procedures for the four runs are described below.

Run EU-1

After the sample was placed in the apparatus and the acid added, the bath was brought to a boil by external heating in 35 minutes. While boiling continued, 5 amps were passed until the sample was completely disintegrated; this occurred in 1 hour. The bath was then cooled, the remaining graphite filtered, and the uranium-bearing liquor evaporated and made up to a standard 1000 ml. for analysis.

Run EU-2a

After the sample was placed in the apparatus and the acid added, 10 amps were passed for 26 minutes, at which point disintegration was complete. During this period the bath temperature increased from 20° to 110°C due to power dissipation within the liquid. The current was then shut off and the slurry of graphite particles in the nitric acid was boiled and concentrated for 2½ hours. The graphite was filtered off and the filtrate diluted to a standard 1000 ml. for analysis.

Run EU-2b

The sample for this run was a piece sawed from the same original cylinder as the sample for run EU-2a and presumably containing the same uranium concentration. The same procedure as for EU-2a was used here, as a check. In this case, however, the current passing time was 30 minutes and the boiling and concentration time 3 hours.

Run EU-3

After the sample was placed in the apparatus and the acid added, 10 amps were passed for 28 minutes, at which time disintegration was complete. Due to internal power dissipation the temperature rose from 6° to 99°C. The bath was immediately cooled and filtered without boiling, and the filtrate was then concentrated and made up to 1000 ml. for analysis.

In order to determine the relative ease of leaching of the disintegrated graphite powders and the recovery efficiency of the disintegration process, the filtered graphite particles from each of the described runs were

[redacted]

[redacted]

refluxed in fresh batches of concentrated nitric acid for a total of 183 hours, during which time the acid was changed and analyzed twice, at the 24 hour and 58 hour points. At the end of the final leach, the graphite was filtered, dried, and analyzed by the fluorimetric method for the remaining uranium. Table II lists the weights of uranium remaining in the graphite particles after the disintegration runs and after the 183-hour leach, expressed as parts of uranium per million parts of residue by weight. Also given are the percentages of the total original uranium recovered in the disintegration process, recovered in the 183-hour leach, and still remaining in the graphite residues.

It is apparent from the values in Table II for run EU-3 that the method of electrolytic disintegration alone is less satisfactory than either the method of disintegration while boiling the graphite-nitric acid slurry (EU-1) or that of disintegration followed by boiling (EU-2a & 2b). However, there is not sufficient data to recommend between the latter two methods.

In order to verify the data obtained from these four runs for the amount of uranium remaining in the graphite after disintegration and after leaching, and in order to ascertain the relative efficiencies of successive leaches, run EU-4 was carried out in the stack type mass treatment apparatus shown in figure 3 and described in a later section of this report. Three samples of uranium-impregnated graphite, similar in dimensions and in method of preparation to those used in runs EU-1, 2a, 2b, and 3, weighing a total of about 85 gms. and containing about 14 percent uranium, were mounted in the apparatus and a current of 10 amps (current density 3.2 amps/cm.^{2}) was passed for 70 minutes, at which time disintegration was complete. The resulting slurry of graphite powder in nitric acid was kept very close to the boiling point for one hour and then filtered. The filtrate and subsequent wash liquors were concentrated and made up to a standard volume for analysis, and the graphite residue dried, weighed, and sampled. About two-thirds of the graphite was then subjected to five successive one-hour leaches with boiling concentrated nitric acid. After each leach the graphite was filtered, washed, and sampled; and the leach liquor and washes were concentrated and made up to a standard volume for analysis. Analytical results are given in Table III.

The analytical results shown in Table III do not constitute a completely true picture of the process because of the frequent sampling losses, filtering and transfer losses, and oxidation losses which occurred during this run. Table IV gives a more real picture of the progress of recovery in a run in which no sampling is done. It is apparent from the data that after

[redacted]

[redacted]

TABLE II

RUN NO.	URANIUM REMAINING IN GRAPHITE RESIDUE (parts per million by weight)		PERCENTAGE OF ORIGINAL URANIUM		
	AFTER DISINTEGRATION	AFTER 183-hr. LEACH	RECOVERED IN DISINTEGRATION RUN	RECOVERED IN 183-hr. LEACH	REMAINING IN GRAPHITE RESIDUE
EU-1	497	42	99.74	0.24	0.02
EU-2a	388	64	99.79	0.18	0.03
EU-2b	392	37	99.79	0.19	0.02
EU-3	984	69	99.27	0.68	0.05

TABLE III

Analytical Results from Run EU-4

STATUS IN RUN	URANIUM REMAINING IN GRAPHITE (parts per million-weight)	URANIUM RECOVERED IN SOLUTION (grams)
After Disintegration	141	12.15
After 1st Leach	80	0.00578
After 2nd Leach	68	0.0011
After 3rd Leach	55	0.00033
After 4th Leach	74*	0.00050
After 5th Leach	56	0.00050

* Probably due to improper sampling.

TABLE IV

Predicted Overall Recovery Data for Samples Containing 15 Percent UO_2*

STATUS IN RUN	URANIUM REMAINING IN GRAPHITE			URANIUM RECOVERED IN SOLUTION	
	CONCENTRATION (ppm)	WEIGHT (grams)	PERCENT OF ORIGINAL U	WEIGHT (grams)	CUMULATIVE PERCENT OF ORIGINAL U
After Disinteg.	141	0.0103	0.087	11.8897	99.913
After 1st Leach	80	0.0058	0.049	0.0045	99.951
After 2nd Leach	68	0.0049	0.041	0.0009	99.959
After 3rd Leach	55	0.0040	0.034	0.0009	99.966
After 4th Leach	55	0.0040	0.034	0.0000	99.966
After 5th Leach	55	0.0039	0.033	0.0001	99.967

* Initial total weight of 85 gms. containing 11.9 gms. U assumed.

[redacted]

the third leach additional leaches are of little or no value. The table shows that for a sample initially containing about 15 percent UO_2, electrolytic disintegration followed by three leaches will reduce the uranium content of the graphite to about 0.03 percent of the original uranium.

Unfortunately, losses from leaching processes, i.e. the amount of uranium remaining in the residue, are relatively independent of the initial uranium concentration, and it could be expected that the order of magnitude of the uranium remaining in the residue after the third leach would be 55 parts per million whether the original sample contained 12 to 15 percent uranium as in these experiments, or 2 percent as expected in the pile. It is probably reasonable to assume that the uranium concentrations of the graphite residue after the various stages of the process would approximate those shown in Tables III and IV regardless of the initial sample concentration, and we may calculate the probable uranium contents, concentrations, and recoveries for a 2 percent UO_2 sample. Table V shows the results of such a calculation. It will be noted that in this case the best that can be expected is a reduction of the uranium concentration of the graphite to about 0.3 percent of the original uranium.

It should be pointed out, however, that this loss is no worse than that which would be expected from a burning process such as that described by Jackson (2), notwithstanding the fact that the statement is made in the cited report that losses from such a process would be of the order of 0.001 to 0.0001 percent of the uranium in processing fuel units containing 2 percent UO_2. These estimates are accurate as far as the uranium known to remain in the fusion residue after leaching is concerned, but to state that this uranium would constitute the entire loss from the system is to assume that there would be no stack losses and that all of the uranium fed to the burner would remain in the ash. Actual experience has shown that in the Y-12 burning process there is an unaccountable stack and scrubber system loss of 0.2 to 1 percent of the uranium processed (independent of starting uranium concentration), depending upon the amount of care and pains taken. The cost of the process and the complexity of the apparatus increase markedly when losses must be kept toward the lower figure.

It can be seen, then, that losses of about the same order of magnitude (0.3 percent) would result in either the electrolytic disintegration and leach recovery process or the burning and fusion process, when treating graphite containing 2 percent UO_2. In the electrolytic process the loss would be almost completely in the form of known discard in the graphite residue, as in this process the accountability of material can be expected to be very good, whereas in the burning process the loss would be divided between an extremely small known discard in the ash fusion residue and a sizable unaccountable stack and scrubber system loss.

[redacted]

TABLE V

Predicted Overall Recovery Data for Samples Containing 2 Percent UO_2*

STATUS IN RUN	URANIUM REMAINING IN GRAPHITE			URANIUM RECOVERED IN SOLUTION	
	CONCENTRATION (ppm)	WEIGHT (grams)	PERCENT OF ORIGINAL U	WEIGHT (grams)	CUMULATIVE PERCENT OF ORIGINAL U
After Disinteg.	141	0.0104	0.788	1.3096	99.212
After 1st Leach	80	0.0059	0.447	0.0045	99.553
After 2nd Leach	68	0.0050	0.379	0.0009	99.621
After 3rd Leach	55	0.0040	0.303	0.0010	99.697

* Initial total weight of 66 gms. containing 1.32 gms. U assumed.

[redacted]

[redacted]

Although no direct experimental work investigating the combination of the two processes has been done, indications are that such a combination would constitute a recovery method in which losses would be extremely small. If the depleted fuel units containing 2 percent UO_2 were first electrolytically disintegrated and the residue leached several times, approximately 99.7 percent of the uranium would be recovered in the solution form and a powder containing about 55 parts per million or 0.3 percent of the original uranium would result. If this powder were then burned and the ash leached, fused with sodium hydroxide, and releached, the 0.2 to 1 percent uranium unaccountable stack and scrubber system loss inherent in the burning process would apply only to the 0.3 percent of the original uranium left in the graphite powder after disintegration. If this unaccountable loss were kept to the minimum attainable, 0.2 percent, the result would be a final overall loss of 0.0006 percent of the original uranium. Even if an unaccountable loss in burning of 1 percent of the uranium in the burned material were permitted (which would make the process much simpler and cheaper), the overall resulting loss would be only 0.003 percent of the original uranium.

The combination process described also has to its credit several favorable points concerning minimizing the U^{235} inventory necessary to allow for the decay of fission product activity. In the burning process, applied to spent fuel recovery, there is great danger of escape of highly radioactive fission products through the stack, and consequently the spent fuel units could not be burned directly without long periods of storage to allow for fission product decay. Such storage of spent fuel before processing would necessitate a large inventory of U^{235} for the pile operation, only a relatively small portion of which would be in actual use at any time. On the other hand, the electrolytic disintegration process involves little danger of fission product escape, since all operations are carried out in solutions, and is easily adaptable to remote control operation. It is therefore possible that spent fuel could be electrolytically processed and over 99 percent of the uranium recovered for reuse very shortly after removal of the fuel from the pile. The graphite powder residue, containing only about 55 parts per million of uranium, could then be stored for as long as necessary to allow activity to decay, without materially affecting the U^{235} inventory. The burning process for recovering the remaining uranium could be performed safely after the storage period. (13)

[redacted]

[redacted]

IV. DEVELOPMENT OF MASS TREATMENT APPARATUS

It was apparent at the start of the investigation of the electrolytic disintegration process that in order to be of practical use the process would be required not only to result in a high recovery efficiency, but also to be adaptable to simple remote control treatment of large numbers of spent fuel units. The work of testing the recovery efficiency of the process, described in the preceding section of this report, was carried out almost completely in the small laboratory apparatus shown in figure 1. This sort of apparatus, however, was deemed impractical for treatment of actual fuel units since only one unit could be treated at a time, and a considerable amount of care was necessary in placing the sample in the apparatus; remote control handling would have been complicated. The development of an apparatus in which these difficulties would be eliminated was the goal of the second phase of the investigation.

A secondary goal of the development program was the replacement of platinum in the apparatus with a cheaper metal which would still withstand the corrosive action of the nitric acid electrolyte. After a number of tests it was found that tantalum not only withstood corrosion but had additional properties which permitted the elimination of external rectifiers or other sources of direct current.

Tantalum possesses a surface oxide which has a great deal higher electrical resistance in one direction than in the other. Rough tests in a small concentrated nitric acid cell with one tantalum and one platinum electrode showed that for a given DC voltage impressed, the current flow was much greater when the tantalum was connected as the cathode than as the anode. Therefore, referring to figure 1, if the insulated platinum lead wire to the graphite anode and the platinum cathode wire are both replaced with tantalum and alternating instead of direct current is fed to the apparatus, during the AC half-cycle when the graphite is positive, current flows from the graphite to the cathode and disintegration occurs. (No insulation is required on the graphite lead wire as it is anodic and the tantalum oxide resistance is high.) When the poles are reversed during the second half-cycle, essentially no current flows since the "cathode" is now anodic. Furthermore, if a circuit similar to that shown in figure 2, employing two cathodes and a center-tapped transformer, is used, full-wave rectification is achieved within the cell, the graphite being continuously anodic and the two cathodes operating alternately. This circuit was used in all the apparatus development work of this investigation. However, it was found necessary to place a small piece of platinum foil between the graphite and the tantalum anode lead in order to make adequate contact.

[redacted]

[redacted]

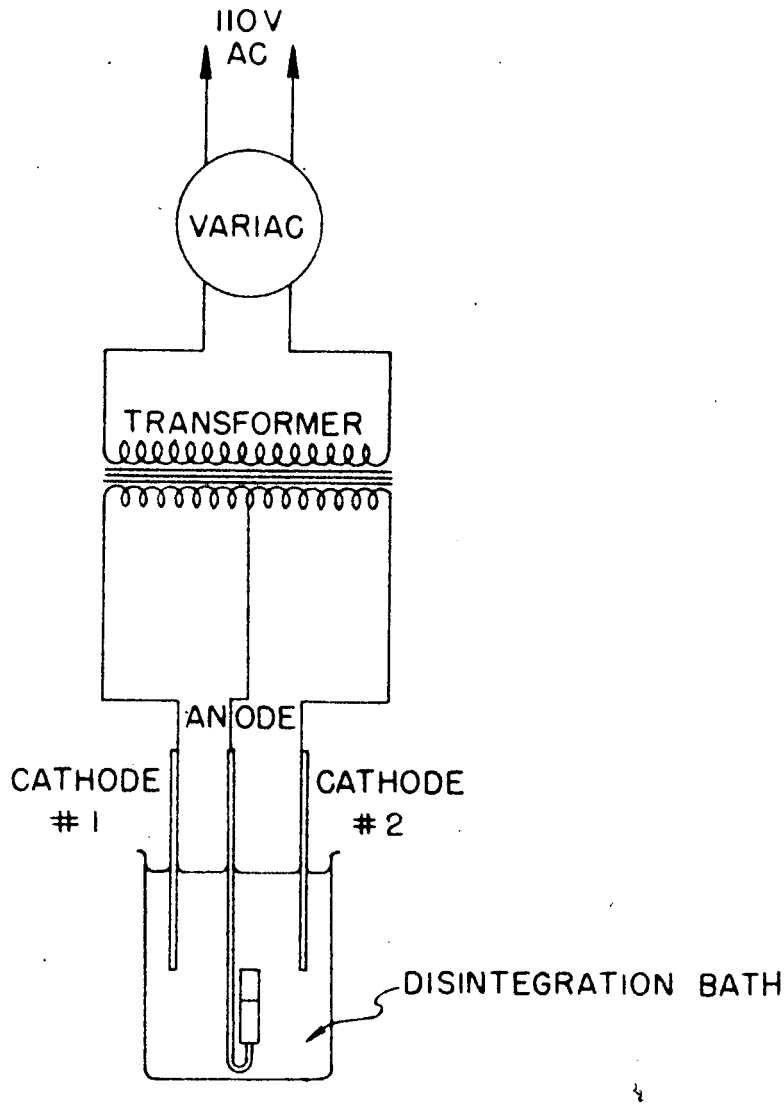

FIGURE 2

FULL WAVE CIRCUIT

JANUARY 3, 1949 Dr 6648

[redacted]

[redacted]

Several attempts were made at designing and constructing apparatus which would permit simultaneous or successive treatment of a number of samples, and which would not require precision loading of the samples. The first attempted method, which involved the random placing of several samples in a tantalum basket and submerging the basket in the electrolyte, failed because the large graphite surface exposed to the current flow made the attaining of the required current density impossible in our experiment and impractical in practice. An interesting point noted here was that under the influence of the low current density (less than 0.5 amps/cm.^{2}) a profusion of cracks appeared in the exposed surfaces of graphite; consequently the surface area was increased greatly, and the current density decreased still lower until action ceased completely.

A different operating principle, wherein the samples were stacked end to end in the apparatus and progressively disintegrated, was employed in several further designs, each of which was tested and improved upon until the final apparatus, shown in figure 3, was achieved. It is not necessary for the purposes of this report to describe each of the intermediate designs.

Figure 3 shows several sectional views of the final stack type disintegration apparatus. The three $\frac{1}{4}$-inch tantalum rods used as electrodes (two cathodes, one anode lead) are fastened to stainless steel block clamps, which are in turn screwed to the Lava top mounting fixture. (Lava Grade A was found by test to be impervious to boiling nitric acid and its vapors.) The anode lead rod extends below the ends of the cathodes about the length of the glass insulator tube, makes a 180° bend, and returns to end in a 1/8-inch thick pedestal identical with the samples in diameter, about one inch below the ends of the cathodes. The samples are stacked on the pedestal (with a piece of platinum foil between the pedestal and the bottom sample) and surrounded by the glass insulator tube, which rests atop the uppermost sample by means of a transverse support bar. The glass insulator tube is about $1\frac{1}{2}$ inches longer than the total height of the sample stack. The entire assembly is placed in a tall glass tank, the Lava fixture resting on the top of the tank.

In our experiment, the glass tank was fitted at the bottom end with a 24/40 standard taper male fitting to fit one neck of a flask. A second neck of the flask was fitted with a water-cooled condenser, the upper end of which connected to a side arm on the tank below the liquid level. The condenser was operated as a heat exchanger and created a convection current, upward in the tank and downward in the condenser, which served to prevent clotting of disintegrated particles and violent boiling of the nitric acid in the tank. A reflux condenser was attached to the tank near the top to prevent loss of nitric acid.

[redacted]

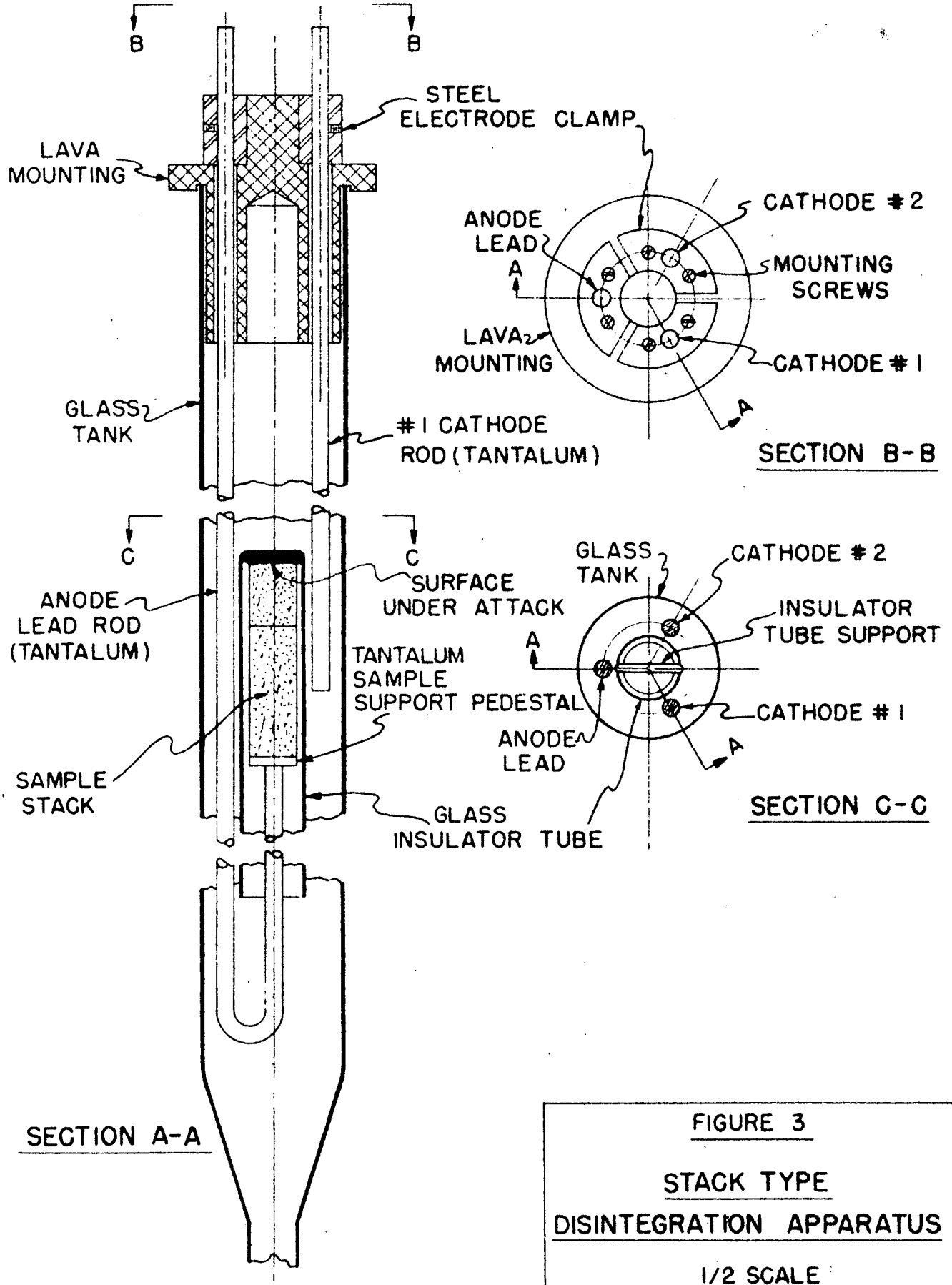

FIGURE 3

STACK TYPE

DISINTEGRATION APPARATUS

1/2 SCALE

JANUARY 3, 1949 Dr 6649

In operation, the glass insulator tube essentially prevents disintegration action from occurring anywhere except at the top of the uppermost sample. Therefore the samples are successively attacked from the top of the stack to the bottom, and the glass insulator tube rides down the stack with the progress of disintegration, so that the distance relationships between the graphite anode surface under attack and the cathodes remain the same throughout the run.

The cost of recovery by electrolytic disintegration using this type of apparatus should be quite low. Based on the data of the uranium recovery run EU-4, carried out in this apparatus and described previously in this report, electric power is consumed at the rate of about 3 KWH per pound of graphite disintegrated, and it should be noted that this power is not lost, but is dissipated as heat in the electrolytic bath.

Figure 4 represents a suggested design for an actual production model of the stack type apparatus tested in this investigation and shown in figure 3. This design would be quite simple in construction details, and could be loaded, operated, and discharged by remote control. Operating procedure would be as follows: the reflux condenser would be removed from the top of the Lava mounting fixture and the latter, together with the attached electrodes, would be removed from the tank and slowly inverted, causing the insulator tube to slide out of the assembly. The insulator tube could then be carried to the pile face, or to the point at which the depleted fuel units are discharged from the pile, loaded, returned to the disintegration apparatus in an inverted position, and thrust upward into the still inverted electrode assembly through the condenser hole in the Lava fixture. The entire apparatus could then be returned to its proper position and lowered into the tank, and the condenser replaced. After the disintegration of the fuel units, the graphite-nitric acid slurry would be dropped through a remote controlled valve at the bottom of the tank and piped to centrifuge or filter stations.

V. SUGGESTIONS FOR FURTHER WORK

It should be emphasized that the design of the production model disintegration apparatus will have to be modified to conform to the design of the fuel units. Currently a considerable number of designs for fuel units, ranging in complexity from a simple hollow cylinder to a multiple hexagon honey-comb, are under study. It is suggested that, after the final fuel unit design has been fixed, an experimental program be carried out to determine the optimum de-

[redacted]

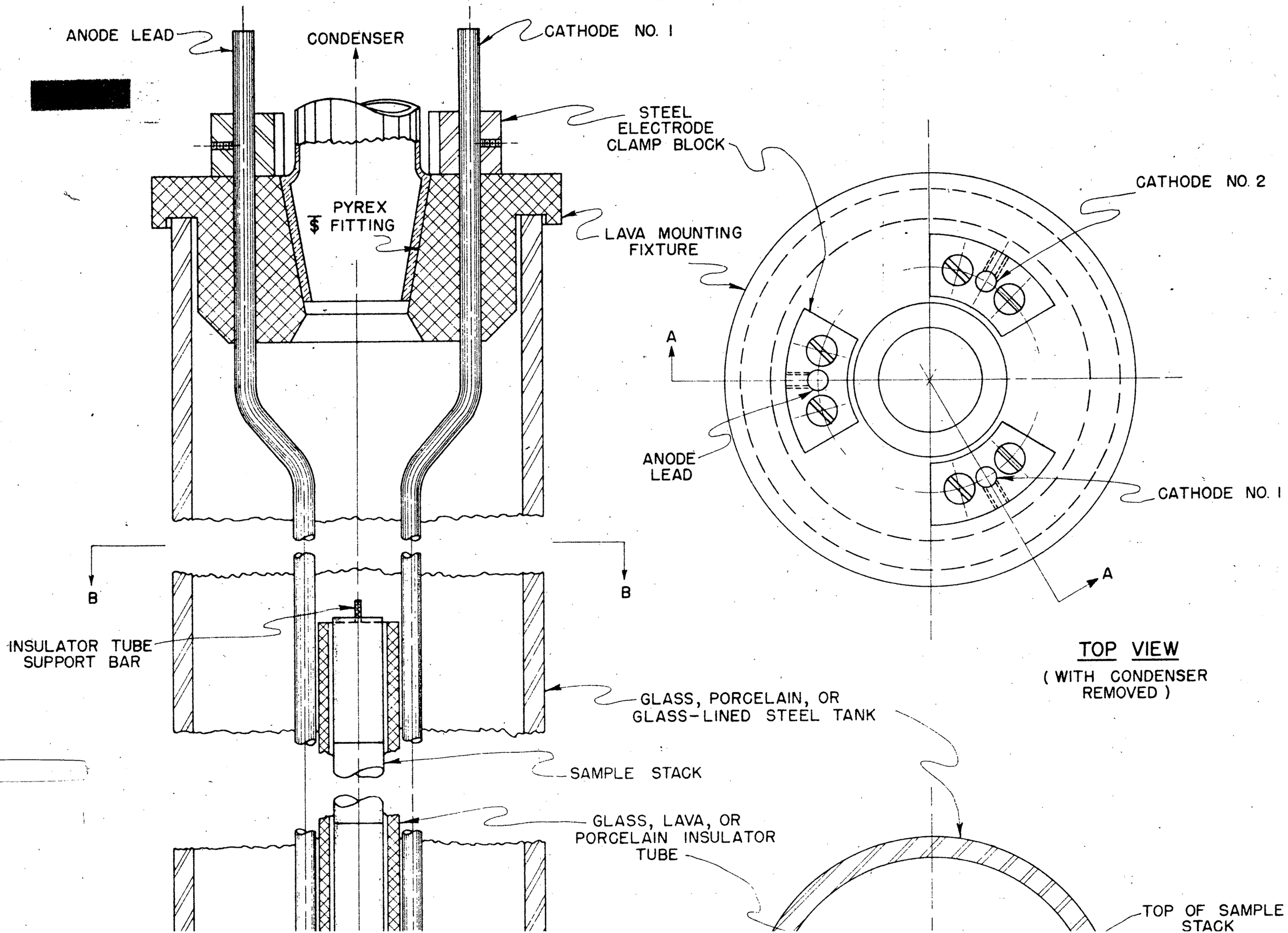
ANODE LEAD
CONDENSER
CATHODE NO. 1
STEEL ELECTRODE CLAMP BLOCK
PYREX ₮ FITTING
LAVA MOUNTING FIXTURE
CATHODE NO. 2
A
ANODE LEAD
CATHODE NO. 1
A
B
B
INSULATOR TUBE SUPPORT BAR
TOP VIEW
(WITH CONDENSER REMOVED)
GLASS, PORCELAIN, OR GLASS-LINED STEEL TANK
SAMPLE STACK
GLASS, LAVA, OR PORCELAIN INSULATOR TUBE
TOP OF SAMPLE STACK

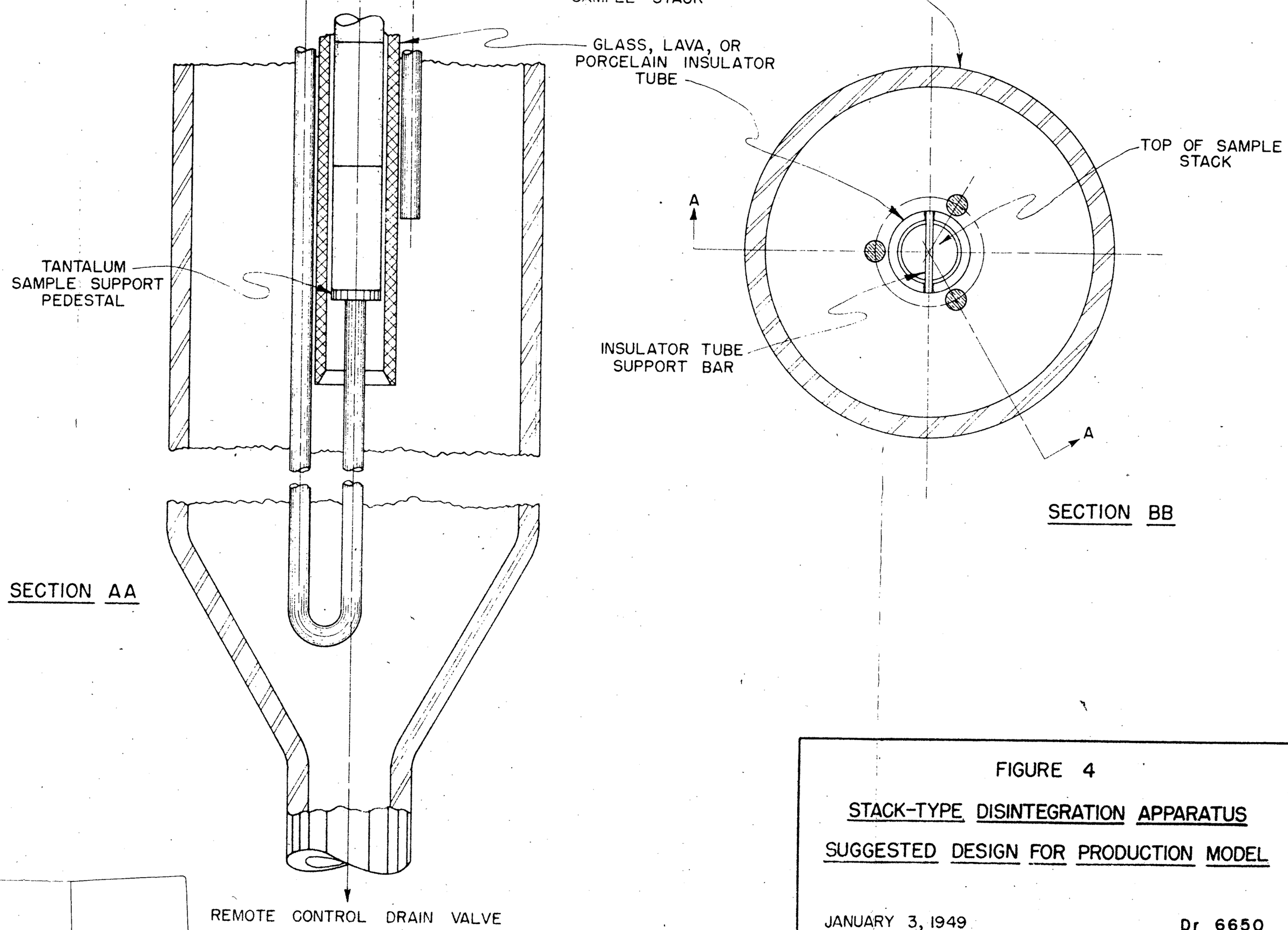

FIGURE 4

STACK-TYPE DISINTEGRATION APPARATUS

SUGGESTED DESIGN FOR PRODUCTION MODEL

JANUARY 3, 1949

Dr 6650

[redacted]

sign of electrodes and insulating tube for treating this unit. A production model apparatus, incorporating the design of figure 4 and the results of the experimental program, should then be built and thoroughly tested, preferably with remote control.

Another problem with which it will be necessary to deal is the question of the effectiveness of the disintegration process in treating graphite formed by molding and subsequent graphitizing, and in treating graphites which have been especially processed to decrease surface permeability. At present, the Power Pile effort includes an experimental program to determine the feasibility of rendering graphite impermeable to gaseous fission products by pitch coating and polymerization, ceramic glazing, metal coating by electroplating or by metal evaporation and condensation, and other methods. Laboratory experiments will be necessary to determine whether or not the electrolytic disintegration process is applicable to such materials.

[redacted]T

[redacted]

REFERENCES

1. McCullough, C. R., et al., "Preliminary Design Proposal-Daniels Experimental Power Pile," Mon N-188.

2. Jackson, H. K., "Preliminary Report on the Recovery of Uranium from Spent Graphite-Uranium Fuel Material," Mon T-320.

3. Thiele, H., Z. anorg. allgem. Chem., 206, 407-415 (1932).

4. Thiele, H., ibid., 207, 340-352 (1932).

5. Thiele, H., Z. Elektrochem., 40, 26-33 (1934).

6. Brown, B. K., & Storey, O. W., Trans. Am. Electrochem. Soc., 53, 128-147 (1928).

7. Perrott, G. St. J., & Kinney, S. P., J. Am. Cer. Soc., 6, 417 (1923).

8. Austin, J. B., Ind. Eng. Chem.-Anal. Ed., 11, 334 (1939).

9. Green, J. Franklin Inst., 204, 713 (1929).

10. Hatch & Choate, ibid., 207, 369 (1929).

11. Hatch, ibid., 215, 27 (1933).

12. Hunter, L. P., "Progress on High Temperature Thermal Conductivity Measurements," Mon N-442, Appendix 1, "Impregnation Work."

13. Daniels, Farrington, Memo CL-FD-46 to C. R. McCullough, "Suggested Research Programs for Power Pile," Oct. 20, 1947, ORNL Central Files No. 47-10-279.

[redacted]