CENTRAL RESEARCH LIBRARY
DOCUMENT COLLECTION

UNCLASSIFIED

ORNL 325
SUPPLEMENT 1
PHYSICS GENERAL

4

MARTIN MARIETTA ENERGY SYSTEMS LIBRARIES
3 4456 0360413 3

PHYSICS DIVISION

PROGRESS REPORT FOR THE QUARTER

DECEMBER, JANUARY, FEBRUARY

1948-49

A.H. SNELL, Director

E.O.WOLLAN, Associate Director

CENTRAL RESEARCH LIBRARY
DOCUMENT COLLECTION

LIBRARY LOAN COPY

DO NOT TRANSFER TO ANOTHER PERSON

If you wish someone else to see this document, send in name with document and the library will arrange a loan.

OAK RIDGE NATIONAL LABORATORY

OPERATED BY
CARBIDE AND CARBON CHEMICALS CORPORATION
FOR THE
ATOMIC ENERGY COMMISSION
POST OFFICE BOX P
OAK RIDGE, TENNESSEE

UNCLASSIFIED

UNCLASSIFIED

ORNL 325-Supplement 1

Copy No. 4

Contract No. W-7405, eng 26

PHYSICS DIVISION

PROGRESS REPORT FOR THE QUARTER DECEMBER, JANUARY, FEBRUARY

1948-49

A. H. SNELL, DIRECTOR

E. O. WOLLAN, ASSOCIATE DIRECTOR

Date Issued
MAY 18 1949

OAK RIDGE NATIONAL LABORATORY
operated by
Carbide and Carbon Chemicals Corporation
for the
Atomic Energy Commission
Post Office Box P
Oak Ridge, Tennessee

UNCLASSIFIED

MARTIN MARIETTA ENERGY SYSTEMS LIBRARIES

3 4456 0360413 3

OAK RIDGE NATIONAL LABORATORY INTERNAL DISTRIBUTION AS FOLLOWS:

1. G. T. Felbeck (C&CCC)
2-3. 706-A Library
4. 706-B Library
5. Biology Library
6. Health Physics Library
7-8. Training School Library
9-12. Central Files
13. J. A. Swartout
14. J. H. Gillette
15. A. Hollaender
16. J. H. Frye, Jr.
17. E. J. Murphy
18. M. D. Peterson
19. C. N. Rucker
20. W. D. Lavers
21. A. M. Weinberg
22. J. S. Felton
23. A. H. Snell
24. E. O. Wollan
25. K. Z. Morgan
26. G. E. Boyd
27. W. E. Cohn
28. R. W. Stoughton
29. J. A. Lane
30. M. M. Mann
31. A. Householder
32. C. E. Winters
33. E. P. Blizard
34. W. H. Jordan
35. F. C. VonderLage
36. Central Files (Off-Plant)

OAK RIDGE NATIONAL LABORATORY EXTERNAL DISTRIBUTION AS FOLLOWS:

37-46. Argonne National Laboratory
47. Armed Forces Special Weapons Project
48-49. Atomic Energy Commission, Washington
50. Battelle Memorial Institute
51-60. Brookhaven National Laboratory
61. Bureau of Ships
62-65. Carbide & Carbon Chemicals Corporation (K-25 Plant)
66-69. Carbide & Carbon Chemicals Corporation (Y-12 Plant)
70-77. Chicago Operations Office
78. Columbia University (Dunning)
79. Columbia University (Failla)
80-86. General Electric Company, Richland
87-94. Hanford Operations Office
95. Iowa State College
96-97. Kellex Corporation
98-101. Knolls Atomic Power Laboratory
102-107. Los Alamos
108. Massachusetts Institute of Technology (Gaudin)
109. Massachusetts Institute of Technology (~~Failla~~) Kaufman
110-117. Mound Laboratory
118-119. National Advisory Committee for Aeronautics
120-121. National Bureau of Standards
122-123. Naval Radiological Defense Laboratory
124. NEPA Project
125-132. New York Operations Office
133-134. North American Aviation, Inc.
135. Patent Advisor, Washington
136-137. Sandia Base
138-152. Technical Information Division, OROO
153. UCLA Medical Research Laboratory (Warren)
154-159. University of California Radiation Laboratory
160-161. University of Rochester
162-165. Western Reserve University (Friedell)
166. Sylvania Electric Products, Inc.

INDEX

	Page No.
INTRODUCTION AND SUMMARY	4
THE VAN de GRAAFF CONVERSION PROGRAM	7
NUCLEAR PHYSICS, NEUTRON DIFFRACTION, LOW TEMPERATURES	8
NEUTRON DIFFRACTION	8
PILE OSCILLATOR	16
CADMIUM CAPTURE γ-RAYS	18
LOW TEMPERATURE PROGRAM	21
ACTIVATION STUDIES WITH FAST PNEUMATIC	21
PHYSICAL ELECTRONICS	23
HIGH SPEED OSCILLOSCOPE	23
SHORT-LIVED ISOMERS	28
NEUTRON DECAY EXPERIMENT	30
NEUTRON MEASURING TECHNIQUES	36
THEORETICAL PHYSICS	38

SUMMARY

THE VAN de GRAAFF PROGRAM

The 2 MV Van de Graaff machine has been placed in readiness to move into its new building as soon as the latter is released by the contractors.

NEUTRON DIFFRACTION

A new double crystal spectrometer has been built, and is undergoing preliminary tests. Magnetic scattering from MnO has been observed, and it is suggested that discrepancies with existing theory may be explicable in terms of coherence arising from short-range coupling of the electron spins. The coherent scattering cross sections of the separated silver isotopes have been measured.

PILE OSCILLATOR

The thermal neutron absorption cross sections of 23 additional elements have been measured, bringing the total to nearly 70 elements. In addition, the thermal neutron absorption cross sections for the separated isotopes of Cr and Zr have been measured.

CAPTURE GAMMA- RAYS

Continuing the cloud chamber study of the energies of electron pairs produced by gammas which result from the capture of slow neutrons in Cd, Cl and U, many new photographs have been obtained under conditions improved as to background.

LOW TEMPERATURES

A Collins Cryostat has been installed, and by pumping on liquid helium temperatures down to 1°K have been obtained. In default of conflicting claims, this is considered to be a record for Roane County in East Tennessee.

ACTIVATION STUDIES WITH FAST PNEUMATIC

The rare earth elements have been surveyed for neutron-induced radioactivities with periods between 0.2 and 60 sec., but no new activities have been found. Some new information has been obtained on the 0.33 sec. activity of Ta.

HIGH-SPEED OSCILLOSCOPE

An amplifier based upon the principle of distributed amplification has been built; it has a rise time of less than 0.006 μ sec., and a bandwidth considerably greater than 45 megacycles.

SHORT-LIVED ISOMERS

Fourteen radioactive nuclides have been examined and found to have no isomeric states with half-lives detectable with the fast delayed coincidence apparatus. Four others have given indications of the possible presence of metastable levels with half-lives somewhat less than 0.1 μ sec.

NEUTRON DECAY EXPERIMENT

Improved circuits have given indications of beta-proton coincidences, but the results are not final because the beta counter was working under unfavorable conditions.

FAST NEUTRON MEASUREMENTS

Lithium-loaded photographic emulsions give too many recoil protons relative to the $Li^6(n,\alpha)H^3$ disintegrations; efforts are being made to increase the lithium concentration. A suggestion is made for studying inelastic scattering by making use of resonances in the $N^{14}(n,p)C^{14}$ reaction.

THEORETICAL PHYSICS

(i) K-shell internal conversion coefficients have been calculated for nine distributed values of Z above Z = 40, for six separate gamma ray energies lying between 0.3 and 5.0 mc^2, and for electric and magnetic multi-

poles of order 2^{ℓ} with ℓ = 1, 2, 3, 4 and 5. This imposing computation has been supplemented by graphical interpolation, so that the complete field above Z = 40 has been covered with a total of 2560 values of internal conversion coefficients. It is hoped that the K-shell job can be completed by calculations at Z = 10, 20 and 30.

(ii) Internal conversion by pair formation has been studied, with the result that the conversion coefficients for electric and magnetic radiation of arbitrary multipole order have been obtained, together with associated energy distributions and angular distributions.

(iii) The nuclear Coulomb field has been found to exert an effect upon electron-neutrino angular correlations which is small and is the same for all five of the interaction forms in β-decay theory. The Coulomb field therefore cannot affect the interpretation of experimental results.

THE VAN de GRAAFF CONVERSION PROGRAM

(W. M. Good, R. W. Lamphere*, F. Rink*)

During the quarter ending with February, progress on the Van de Graaff program was subject to the limitations of temporary location. Therefore, while .5 mev might have been applied to an electron beam, in the interest of safety this was not done. Emphasis has been put on having everything in readiness for the machine when it moves to its new location, and the program of converting the machine for use as a positive ion accelerator has proceeded.

With regard to the immediate objective of erecting the machine as an electron accelerator, the following progress has been made: (i) Circuit diagrams have been completed and wiring is in progress for the principal controls and protectives for use of the machine as an electron machine. (ii) The resistors that divide the voltage down the column have been found unsuitable. Therefore, a survey has been made of "post-war resistors", and a new and more economical type has been found satisfactory. These are undergoing aging preparatory to installation. (iii) The present insulators are to be gradually replaced. Tests have shown that lucite is far less prone than textolite to "track" after flash over has occurred in high pressure air along the insulator surface. (iv) The Machlett electron accelerator tube has been installed in the Van de Graaff in its present site. The vacuum system was erected and observed for leaks and other troubles. A careful search with the leak detector failed to show any significant leaks in either the tube or the auxiliary system. However, there were definite indications of ion-gauge poisoning from mercury, and so for this reason as well as for precaution's sake, the mercury pump has been replaced by an oil pump. The filament was tested for emission and pronounced satisfactory.

Present progress on modifying the Van de Graaff is governed by materials and facilities on hand. In particular it was decided to start out with the Oppenheimer Ion Source. Such a source has been completed and will undergo extensive tests as soon as facilities permit. With regard to the problem of cooling inside the H. V. electrode, it has been found that liquid CO_2 has sufficiently good properties to permit sending it up the column as a liquid and letting it expand into the tank as a refrigerant. For these tests a special "bomb" was made which was gas tight to stand 2000 lb/in^2 and had flourothene ends to stand H. V. Liquid CO_2 was forced into the bomb and H. V. applied across small plates 6 cm^2 in area separated about 1/28 inch. It was found that breakdown did not occur until a voltage of about 60 K.V. was attained. At 30 K.V. the current was not readable on a 30 μ a. meter and at 40 K.V. the current was about 5 μ a.

NEUTRON DIFFRACTION

(C. G. Shull, E. O. Wollan, W. A. Strauser, J. Schenck)

A New Double Crystal Neutron Spectrometer

Up to the present the neutron spectrometer studies at Oak Ridge National Laboratory have been carried out with one spectrometer which consists of a first monochromating crystal permanently set to give a monochromatic neutron beam with $\lambda = 1.06$ Å ($E = 0.07$ ev). This beam passes over the center of a second spectrometer about which a $B^{10}F_3$ counter can be rotated for the study of the angular distribution of the scattered intensity from the samples as previously described.

During the past year another more flexible double crystal spectrometer has been designed and constructed and this spectrometer has now been installed on the third level on the south side of the pile adjacent to the old instrument. The third level is enclosed and air conditioned for better operation of the counters and electronic circuits. The construction of the new spectrometer can be seen in the photograph (Photo II-1) and the two sketches (Fig. II-2 and Fig. II-3).

The monochromating crystal is located in the center of a large cylindrical shield of paraffin and lead. The neutrons from the pile come through a collimating tube A, which at present has a tapered opening 1 inch high by $\frac{1}{2}$ inch wide at the pile face and $1\frac{1}{4}$ inch by $\frac{3}{4}$ inch one foot back from the face. The neutron beam passes to the first crystal through a 60° cut out sector B. The space between the rotating cylinder and the pile is shielded as shown in Fig. II-3. This shield is not shown in Fig. II-2. The crystal D is held on a turn-table at the bottom of a shield plug C along the axis of which is the turn-table shaft attached to a worm drive and scale at F. The shield plug is removable for mounting and adjusting the crystal by the crane E. For obtaining a monochromatic beam of a given energy the cylindrical shield is turned so the exit collimator G makes the required angle 2θ with the primary neutron beam as measured on scale I, and then the crystal D is turned to give maximum diffracted intensity. The exit collimator tube now in use has an opening 1-1/8" high by 3/8" wide. It fits into another tube which can be adjusted so that its central axis passes perpendicularly through the center of rotation of crystal D and sample K, and also so that the axis of the primary neutron beam coincides with the collimator axis when the rotating cylinder is in the zero angle position. After this adjustment was made the open space between the exit collimator tube and the ro-

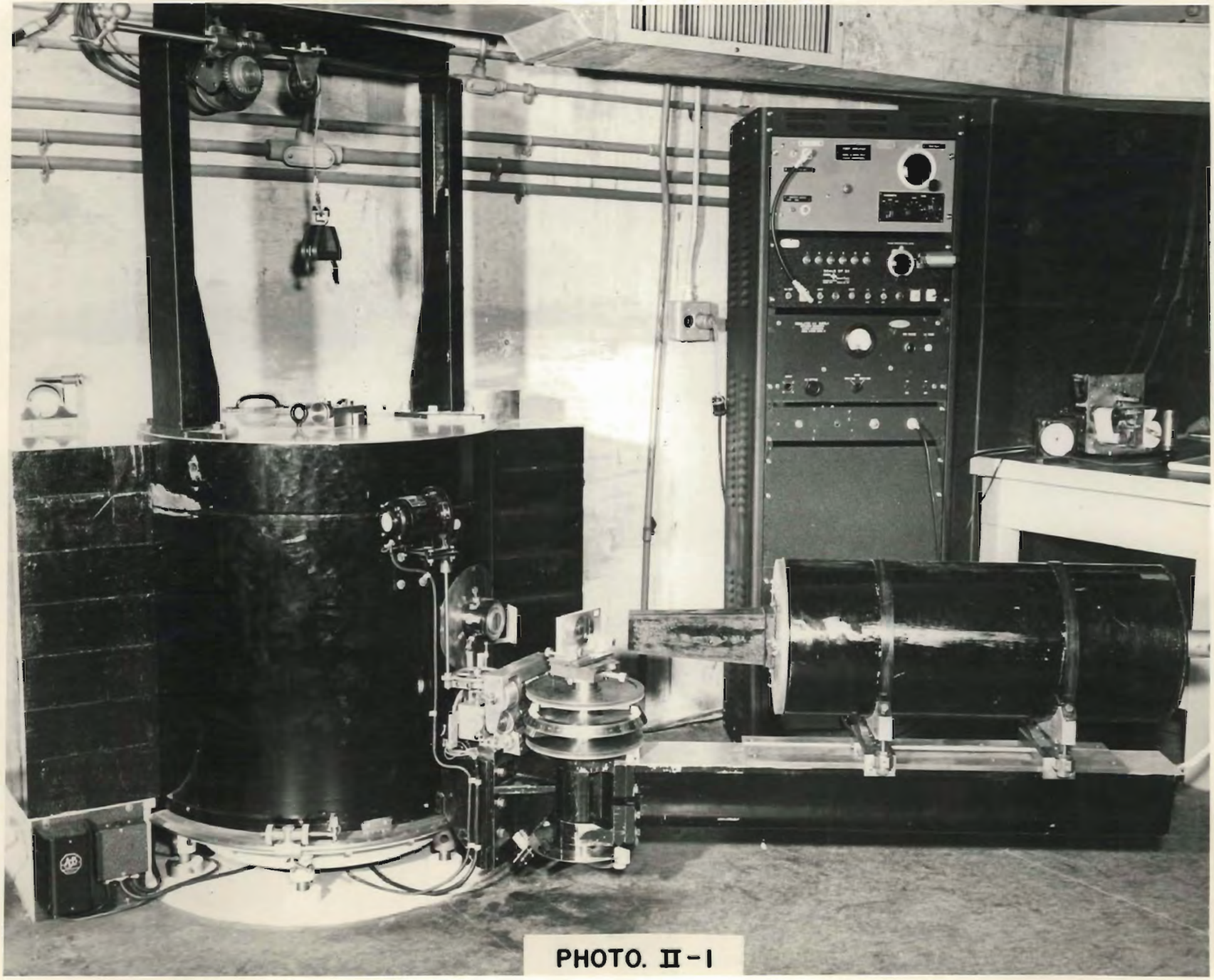

PHOTO. II-1

NOT CLASSIFIED

Drawing # 7085

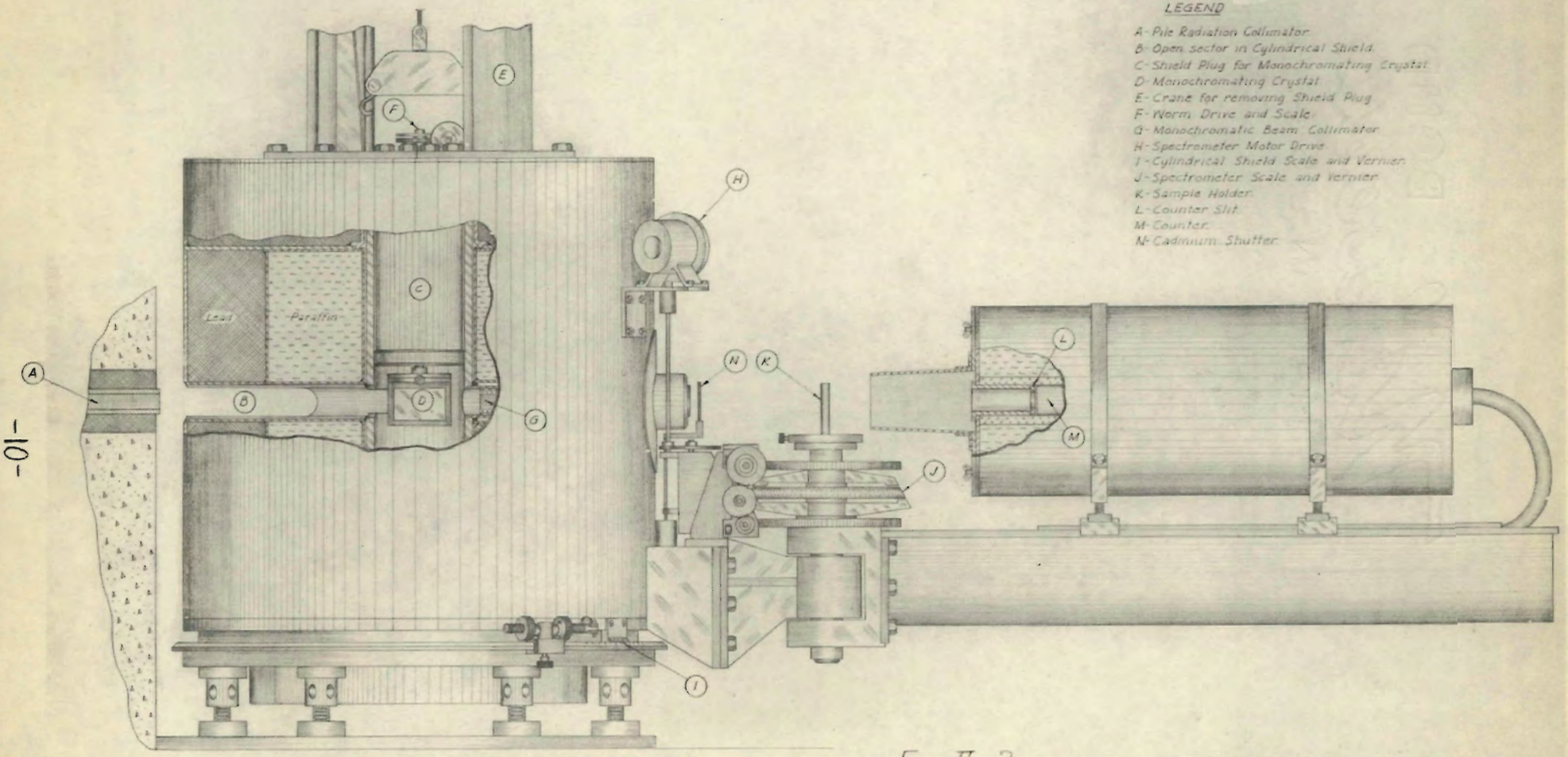

LEGEND

A- Pile Radiation Collimator.
B- Open sector in Cylindrical Shield.
C- Shield Plug for Monochromating Crystal.
D- Monochromating Crystal.
E- Crane for removing Shield Plug.
F- Worm Drive and Scale.
G- Monochromatic Beam Collimator.
H- Spectrometer Motor Drive.
I- Cylindrical Shield Scale and Vernier.
J- Spectrometer Scale and Vernier.
K- Sample Holder.
L- Counter Slit.
M- Counter.
N- Cadmium Shutter.

ELEVATION WITH SHIELDING REMOVED

Fig. II-2

SCALE - INCHES

NOT CLASSIFIED

Drawing # 7084

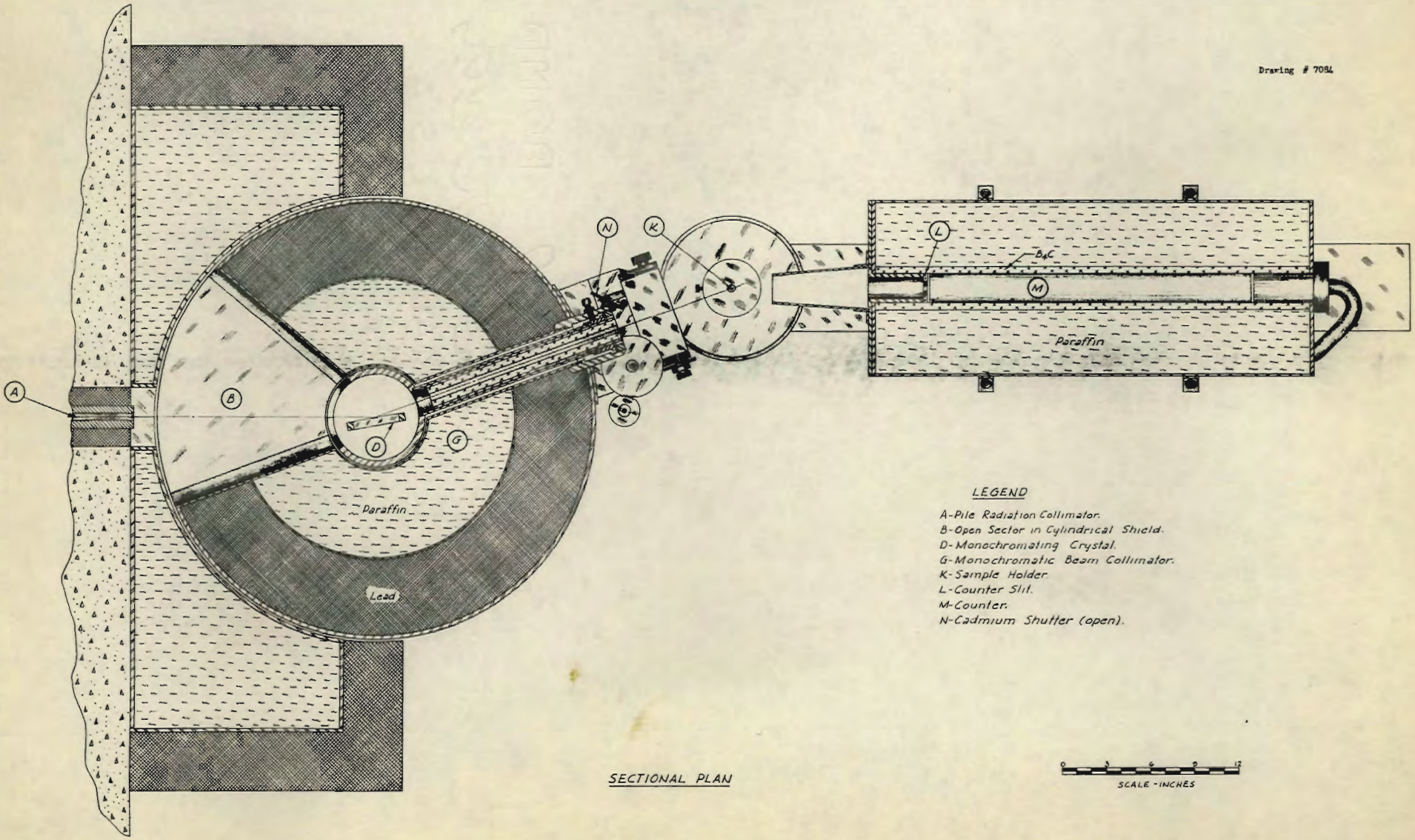

LEGEND

A-Pile Radiation Collimator.
B-Open Sector in Cylindrical Shield.
D-Monochromating Crystal.
G-Monochromatic Beam Collimator.
K-Sample Holder.
L-Counter Slit.
M-Counter.
N-Cadmium Shutter (open).

SECTIONAL PLAN

0 3 6 9 12
SCALE - INCHES

Fig. II-3

tating cylindrical shield was packed full of shielding material. The second spectrometer is attached and rotates with the cylindrical shield and hence the horizontal axis of the exit collimator will always pass through the vertical central axis of the second spectrometer. This spectrometer is arranged with a slow speed motor drive for automatic recording of scattering data. Various speeds of rotation of the counter in the neighborhood of 2° to 4° per hour can be used by changing the gears in the motor drive and higher speeds can be obtained by using motors with different gear reductions. The crystal table is geared to rotate at half the angular velocity of the counter. Alternate readings with and without the solenoid operated cadmium shutter N in place give data with and without counter background. These alternate readings are recorded by a printing traffic recorder as previously described.

This spectrometer can be used as a single crystal instrument, with the crystal at the first or second spectrometer as desired. It can be used with filtered neutrons with, for example, a $1\frac{1}{2}$" BeO filter tube replacing the collimator tube A which can be removed through G when the rotating cylinder is in the zero position, or the BeO filter tube can be substituted for the exit collimator tube G.

A study is now being made of the efficiency of different crystals in giving monochromatic beams of high intensity. No great improvement has yet been achieved over the Fankuchen cut rock salt crystal used with the old spectrometer.

Scattering of Neutrons by Paramagnetic Materials

It was shown a number of years ago by Halpern and Johnson [Phys. Rev. 55 898 (1939)] that the magnetic interaction between a neutron and the atomic magnetic moments in a paramagnetic substance should manifest itself by an extra diffuse scattering over and above the usual nuclear scattering effects. Moreover, the magnetic scattering should show a form factor fall-off in scattering angle of the intensity, since the scattering electrons are distributed in the outer part of the atom in contrast to nuclear scattering which is analogous to point scattering. Halpern and Johnson have given an expression describing the paramagnetic scattering as follows:

$$d\sigma_{mag} = \frac{2}{3} \; s(s+1) \; (e^2/mc^2)^2 \; \gamma^2 \; F^2$$

where $d\sigma_{mag}$ is the differential magnetic scattering cross section, s is the atomic spin associated with the atomic magnetic moment, γ the neutron magnetic moment in terms of nuclear Bohr magnetons, and F is the form factor characteristic of the

specific electrons responsible for the atomic moment.

For the case of MnO containing divalent manganese atoms, there are five unpaired electrons responsible for the magnetic moment and hence $s = 5/2$. Thus for MnO one would expect a differential scattering cross section in the forward direction (small angles where F approaches unity) of 1.12 barns/stearidian and this should be measurable on the neutron diffraction pattern of this substance. Accordingly a careful study of the diffraction pattern for MnO (prepared in the anhydrous state by D. E. LaValle of the Chemistry Division) was made with the idea of detecting and measuring the magnetic scattering.

Fig. II-4 shows the diffuse scattering measured for MnO in the region from 3° to 50°. Superimposed on the diffuse scattering are two relatively strong crystalline reflections (not shown), (111) at 24° and (311) at 47°, which are characteristic of the nuclear scattering. The observed scattering for MnO may contain several contributions other than magnetic scattering and these include (1) residual water content, (2) Bragg reflections in the diffuse scattering region produced with higher order radiation ($\lambda/2$, etc.) in the primary beam, (3) thermal diffuse scattering, (4) incoherent diffuse scattering caused by spin dependent nuclear scattering for Mn, (5) multiple scattering in the specimen, and (6) geometrical scattering caused by slit and air scattering. As to the water impurity, the preparation of the sample was such as to minimize this and the material was loaded and sealed in a controlled atmosphere. The water content was estimated to be less than 0.1 weight percent and this amount should not contribute measurably to the observed scattering. The second order component ($\lambda/2$) in the primary beam has been determined to be present to the extent of 2.2% and this will then produce a weak diffraction peak for the (111) planes at 12° scattering angle as shown in Fig. (II-4). There is some evidence for its presence as shown in the observed scattering. Thermal diffuse scattering should vanish at small angles and should also be negligibly small in the outer region of observation. The last named effect (6) was studied by measuring the residual Cd-difference scattering with an empty sample holder in position. This is seen to produce a small scattering which becomes more prominent as the scattering angle approaches zero. Effects (4) and (5) were studied with a sample of manganese metal plus graphite dust. The Mn + C sample was of such composition as to match the overall scattering of the MnO sample so that multiple scattering effects and manganese nuclear-spin-diffuse scattering should be identical for the two samples. Previous studies had indicated that both multiple scattering and nuclear-spin-diffuse scattering were isotropic and this is indicated in the observed scattering for Mn + C. It is of course necessary that manganese metal show no magnetic scattering and this is to

NOT CLASSIFIED

Dr. 6947

FIG. II - 4

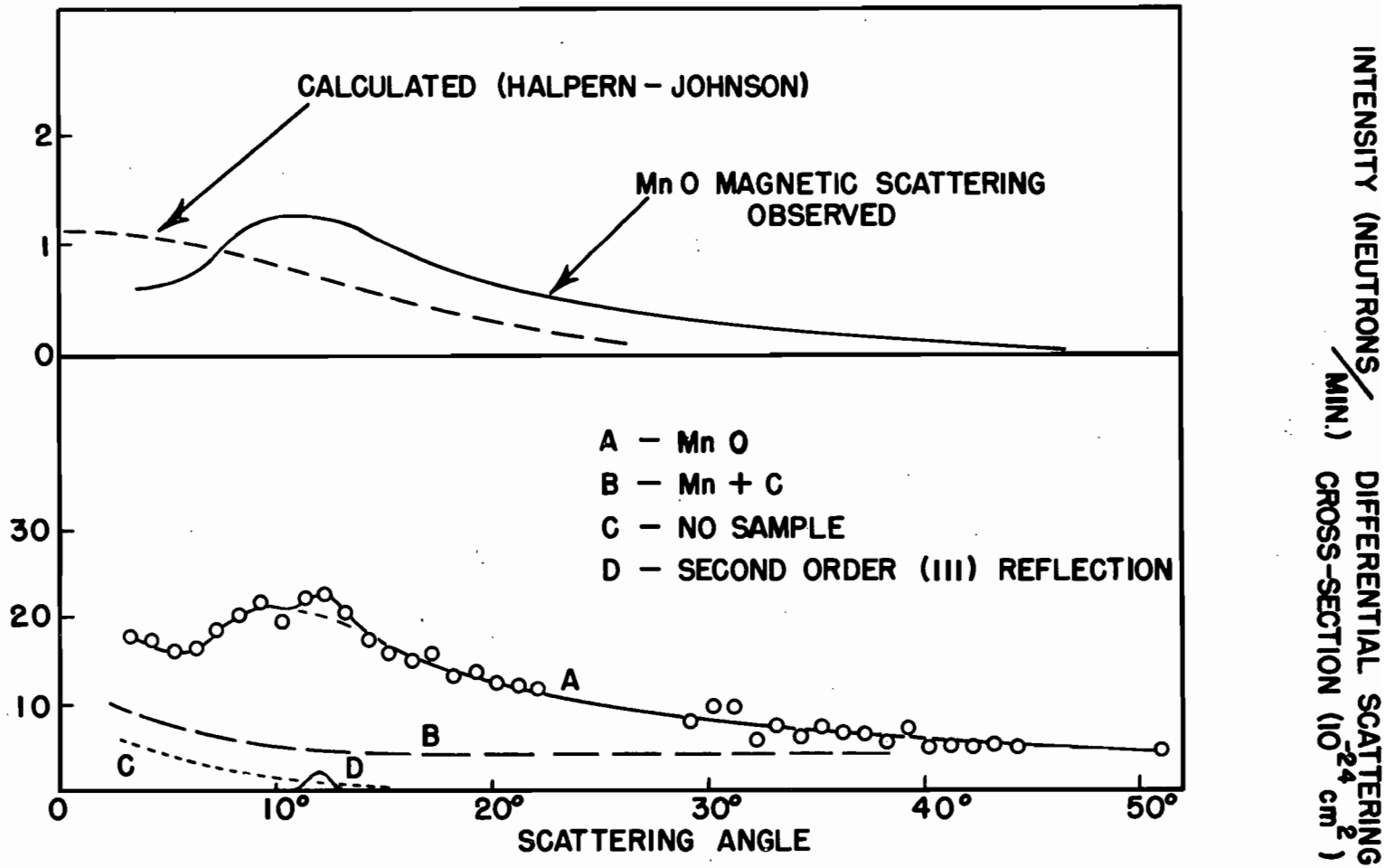

be expected since the metal possesses only a very weak paramagnetism in comparison to the much stronger paramagnetism of the divalent ion.

After correcting the observed MnO scattering for the above contributions, the magnetic scattering shown in the top of Fig. II-4 is obtained. For comparison purposes the magnetic scattering is shown as calculated by the Halpern-Johnson formulae. In this calculation an effective atomic charge of 6 units for that seen by the electrons responsible for the paramagnetism has been used. The two curves are graphed as differential scattering cross section curves and should be compared both in absolute scale and in angular variation. It is to be seen that the observed curve shows a broad maximum around 12° with the intensity falling off to one-half at the innermost angle of measurement. The theory for independent scattering by paramagnetic ions does not account for this. Most likely this introduction of coherence into the magnetic scattering is an indication that the paramagnetic spins are not oriented at random, but rather that there is a short range coupling of the spins. Such a situation would be analogous to the short range order which is encountered in order-disorder studies of alloy structure. The notion of coupled paramagnetic spins is not a new one since this has been used to explain the validity of the Curie-Weiss law of temperature dependence of susceptibility and also microwave relaxation effects. In this respect it is planned to study the neutron scattering by other Mn^{++} salts where the magnetic dilution is greater and hence the coupling is less pronounced. $MnSO_4$ and MnF_2 are being studied at this time.

Scattering Studies on the Silver Isotopes

Scattering data taken some time ago for AgCl and Ag gave a value of 4.6 barns for the coherent scattering cross section of normal Ag. This is somewhat smaller than the total scattering cross section of 6.6 barns and suggests a considerable isotopic incoherence in the scattering by the element. If this is the case then the scattering properties of the two isotopes, Ag^{107} and Ag^{109} must differ materially. Samples of the two isotopes in the form of the chloride were obtained from the Y-12 separation plant and neutron diffraction patterns were obtained in the powder spectrometer. Coherent scattering amplitudes for the silver in the three samples (the two isotopic and one normal samples) were evaluated from the intensities in the neutron diffraction peaks. Since the isotopic samples were not isotopically pure, the observed amplitudes are linear functions of the true nuclear amplitudes as follows:

$$f^*_{Ag} = +0.62 \times 10^{-12}\,\text{cm} = 0.475\, f_{Ag^{109}} + 0.525\, f_{Ag^{107}}$$

$$f^*_{Ag^{109}} = +0.51 \times 10^{-12}\,\text{cm} = 0.922\, f_{Ag^{109}} + 0.078\, f_{Ag^{107}}$$

$$f^*_{Ag^{107}} = +0.83 \times 10^{-12}\,\text{cm} = 0.097\, f_{Ag^{109}} + 0.903\, f_{Ag^{107}}$$

where f represents the appropriate nuclear scattering amplitude and f^* the amplitude as measured for a given sample. The numerical factors before the nuclear amplitudes are the weight percentages in the sample composition. The three equations in two unknowns over-determine the solution for the two amplitudes, but this serves as a useful check on the numerical results. Fig. II-5 shows the graphical solution of the three equations and, of course, the region of intersection establishes the nuclear amplitudes. Thus $f_{Ag^{107}}$ is determined as $+0.83 \times 10^{-12}$ cm and $f_{Ag^{109}}$ as $+0.43 \times 10^{-12}$ cm, and these correspond to coherent scattering cross sections of 8.7 and 2.3 barns respectively, with experimental errors somewhat as indicated on the graph. An attempt was made to determine the total scattering cross sections for the isotopes from measurements of the sample transmission, but these were uncertain because of the relatively large capture cross sections involved and the high total cross section of the combined chlorine. Thus no information on the spin dependence of scattering is available at present.

PILE OSCILLATOR

H. S. Pomerance

The project of measuring the thermal neutron absorption cross sections for about 70 elements using the pile oscillator is nearing completion. The following elements were run during the last quarter:

Barium	1.05 b	Phosphorus	.15 b
Calcium	.41	Praseodymium	11.2
Cerium	.7	Rubidium	.70
Chromium	2.83	Rhenium	84
Cesium	28.9	Scandium	11.9
Erbium	167	Tin	.57
Holmium	64	Strontium	1.16
Lithium	68	Titanium	5.83
Lutecium	108	Thulium	118
Nitrogen	1.86	Vanadium	4.72
Neodymium	46.5	Zinc*	1.01
Osmium	14.7		

* Incorrectly identified as Zr in the last quarterly.

NOT CLASSIFIED

Dr. 6948

FIG. II - 5

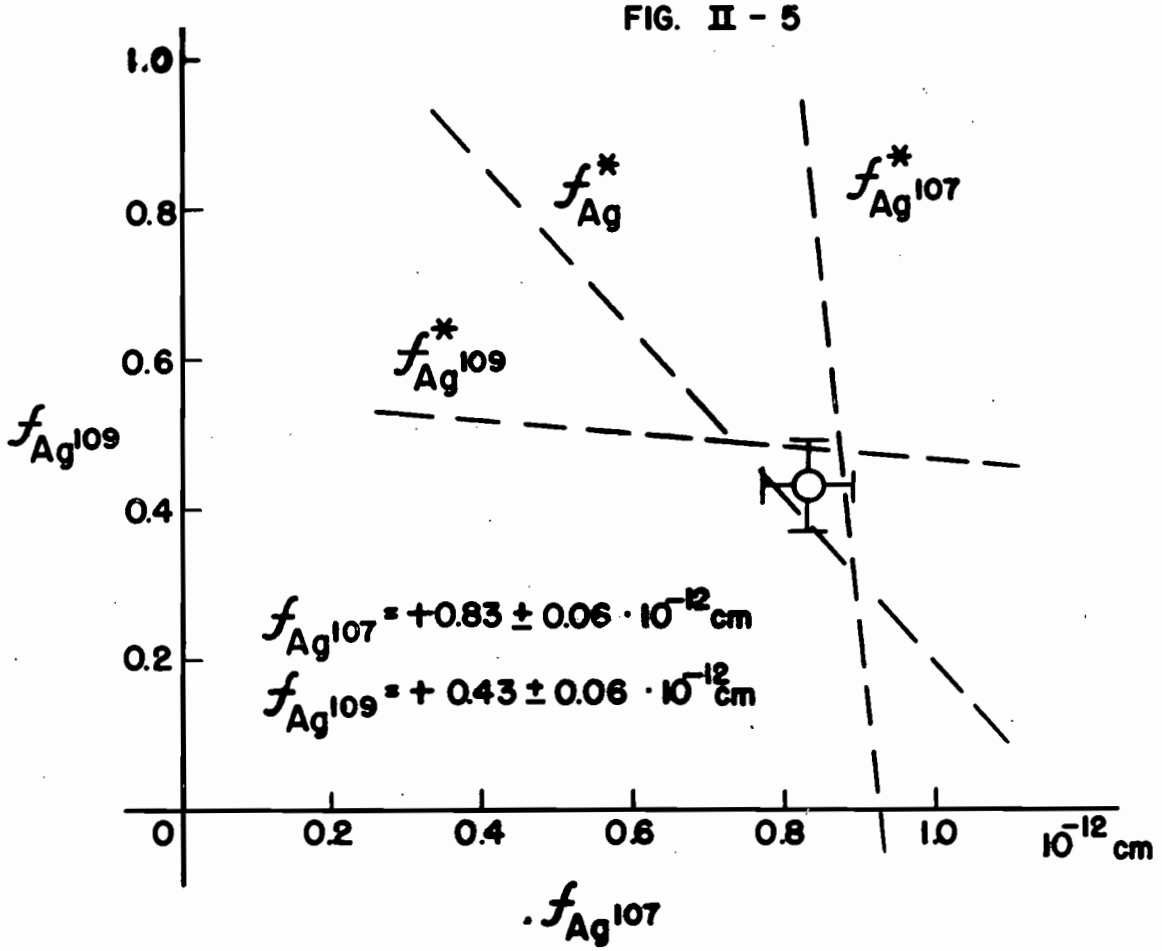

Some separated isotopes from Y-12 have been measured. The chromium and zirconium values, along with those of nickel and copper as previously reported, will be the subject of a paper at the April meeting of the Southeastern Section of the American Physical Society.

Cr^{50}	16.2 b
Cr^{52}	.73
Cr^{53}	17.5
Cr^{54}	0 ± 0.3
Calculated value for natural Cr =	2.99 b
Zr^{90}	.12 b
Zr^{91}	1.54
Zr^{92}	.27
Zr^{94}	.12
Zr^{96}	.29
Calculated value for natural Zr =	.31 b

CADMIUM CAPTURE γ-RAYS

(C. D. Moak and J. W. T. Dabbs)

Recently a set of three cloud-chamber runs has been made for the capture γ-rays in the elements Cd, Cl and U. A number of improvements in the shielding of the equipment has decreased the background radiation from sources other than the capture γ-rays in the element studied to less than 4% of the total effects observed. As in previous experiments, the procedure is to allow the capture γ-rays to produce pairs in a thin Pb target mounted in a cloud chamber with magnetic field.

Measurements on the tracks photographed have just begun and at present only 100 pairs for the element Cd have been analysed. A final report on Cd will be prepared by extending the measurements to include 200 pairs and by combining this result with previous data. This final result will be plotted by a method for analysing data of this type which has been briefly described previously, and which will be fully described when the final report is submitted.

A preliminary histogram of the data already obtained might be of some interest since previous data gave very little information in the energy region 1 to 3 Mev due to background difficulties. The histogram in Fig. II-6 is plotted for $\frac{1}{2}$ Mev intervals and the counting statistics must be regarded as poor. The rough shape of this plot may be compared to a distribution previously reported, Fig. II-7b. Correction of the histogram for pair production cross section gives the lower plot of Fig. II-6, and this may be compared with Fig. II-7a for previous data taken. Fig. II-7a is plotted to an arbitrary scale.

NOT CLASSIFIED

6949

FIG. II – 6

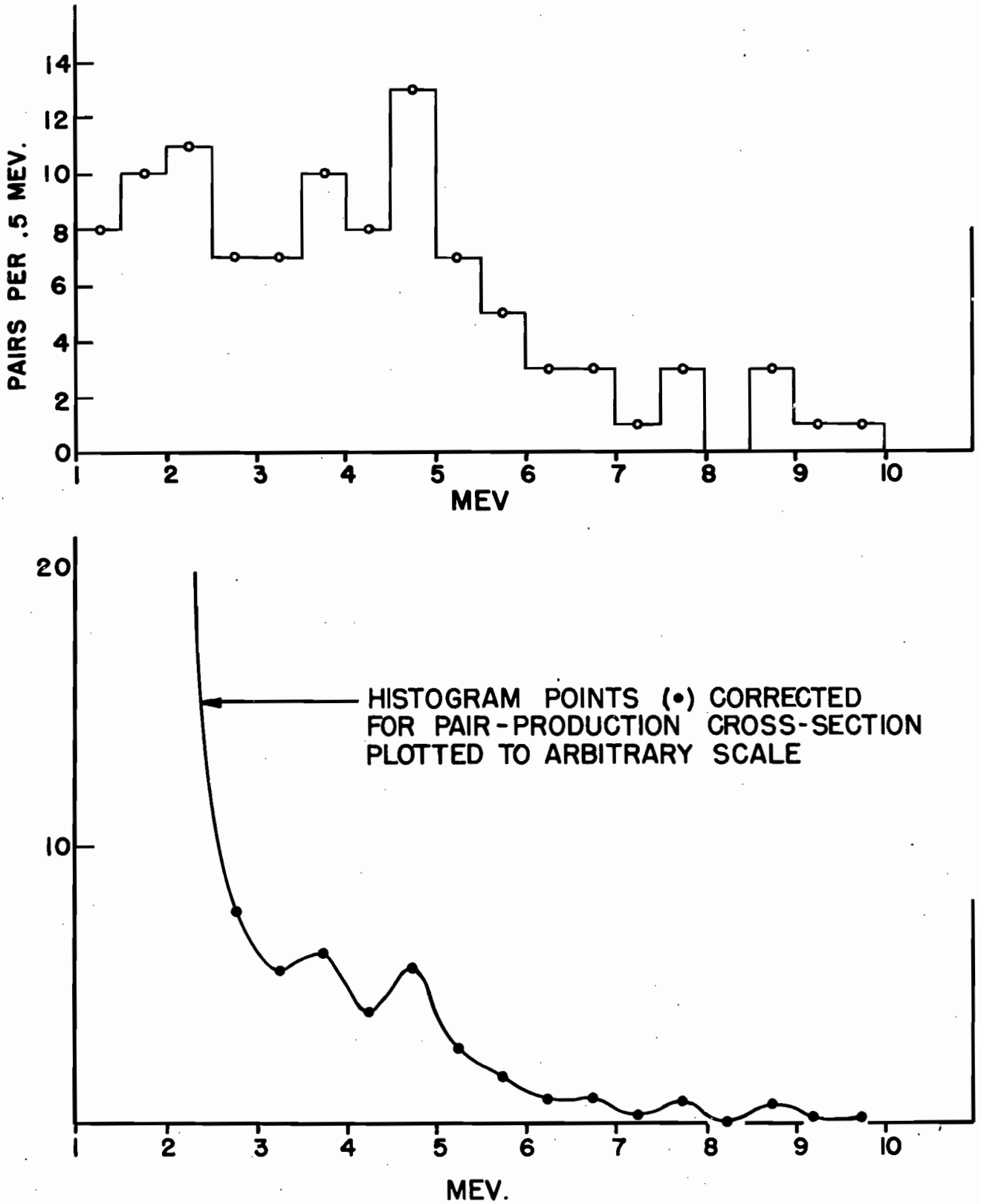

NOT CLASSIFIED

Dr. 6950

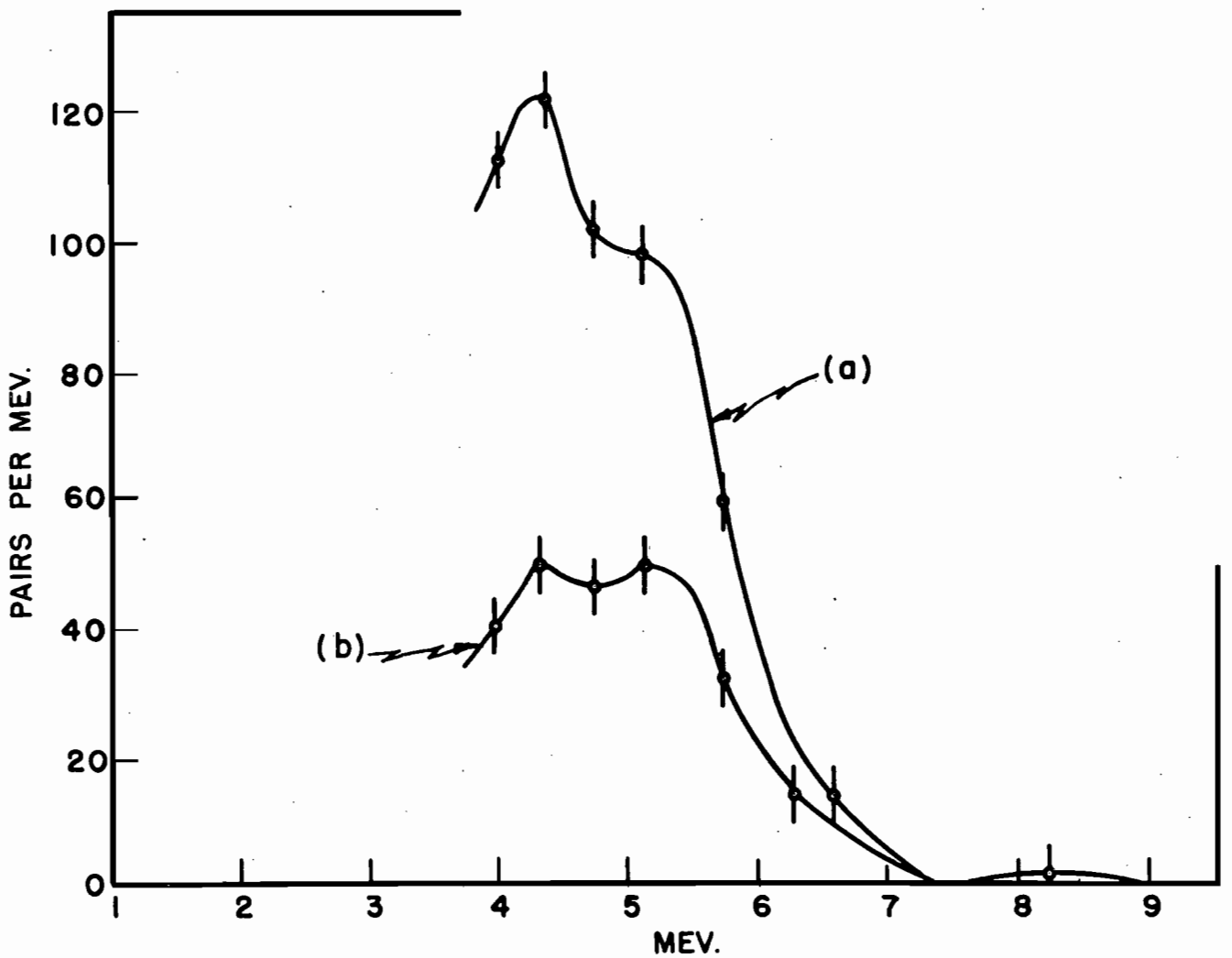

FIG. II - 7

LOW TEMPERATURE PROGRAM

(L. D. Roberts and J. W. T. Dabbs)

A Collins Helium Liquefier has been delivered to the Laboratory and has been found to operate very well. Associated equipment is now set up to study magnetic susceptibilities below 4°K and to perform adiabatic demagnetizations to ~0.2°K. Preliminary studies using chromium potassium alum have been made to check the sensitivity of the measuring apparatus, and, on the whole, performance was as expected. The equipment now available permits adiabatic demagnetization to only ~0.2°K because of the small size of our present magnet. A much larger magnet weighing several tons, using ~50 KW of power, producing a maximum field of 35 KG, and which will permit one to obtain temperatures below 0.01°K is about 80% completed and should be installed and operating within the next two months. This magnet will be located at the face of the pile so that a neutron beam can be projected through the magnet gap. This space at the pile for the magnet installation is also about 80% completed and will be ready for the magnet installation on time.

ACTIVATION STUDIES WITH FAST PNEUMATIC

(E. C. Campbell, K. Robertson)

The fast pneumatic tube installed in hole 56 of the Oak Ridge pile has been used during the past period for the study of short-lived activities. High purity samples of each of the rare earth elements (provided by B. H. Ketelle of the Chemistry Division) were irradiated. No new unreported activities were found in the half-life range investigated, namely from 0.2 seconds to about one minute. The strong activity in erbium having a half-life of 2.5 seconds, previously found by the Argonne group, was studied. A preliminary aluminum absorption curve shows that conversion electrons of energy about 200 kev. are emitted. Studies of the activity in tantalum of 0.33 seconds half-life have been continued. To obtain an absorption curve of this activity several series of runs were made using a 1.9 mg/cm² thin window Geiger counter. The results show considerable fluctuation due partly to a time-dependent background. Data so far obtained indicate a range of 86 mg/cm² of aluminum for the principle component, with some evidence for a softer component of 11 mg/cm² range.

In order to reduce the considerable background due to the linen-filled bakelite rabbit which carries the sample in and out of the pile, a new one machined out of solid nylon has been tested and found to give a much lower background. In addition a separable rabbit with a solid cadmium cover has been constructed in order to distinguish between slow and fast neutron-induced activities. A new preamplifier with a gain of about 10, designed by D. D. Walker, has been installed to feed pulses from the Geiger counter to the scaler. Its principle advantage is that it permits high counting rates without blocking. A new, more reliable dual power supply, a proportional counter and preamplifier, and a faster Speedomax recorder have been obtained for the program.

PHYSICAL ELECTRONICS

HIGH SPEED OSCILLOSCOPE

(G. G. Kelley)

Research in this laboratory on scintillation counters, fast coincidence circuits, and Geiger discharges has pointed up the need for an oscilloscope that is much faster than the DuMont 248. A cathode ray tube is now available (the 5 RP-11) that is capable of much higher writing speeds than conventional tubes. We therefore decided to purchase one of these tubes and associated power supplies from DuMont and build our own sweep circuits and amplifiers.

This tube has provision for 3 stage post-deflection acceleration allowing a total of 29 kilovolts to be used while retaining a reasonable deflection sensitivity. With this much accelerating voltage writing speeds up to 400 inches per microsecond may be photographed.

A sweep generator has been constructed for this tube with six sweep speeds differing by factors of 3, the fastest being nominally 0.1 μ-sec/inch. The actual speed varies from about 0.025 μ-sec/inch with the lowest available accelerating voltage to about 0.2 μ-sec/inch at 29 kilovolts. The circuit is conventional, being very similar to that used in the P5 Synchroscope. The increased speed was obtained by increasing power consumption and voltages and by careful design. A trigger pulse 0.06 volts in amplitude of either sign may be used to start the sweep.

For the video amplifier we intended at first to get as much bandwidth as we could while requiring that about 0.1 volt at the input produce maximum output and that this output be sufficient to deflect the spot at 0.5 inches. After investigating all possibilities it was found that with present tubes the most that could be obtained was a 45 megacycle bandwidth. The amplifier output stages would use two 829B tubes driven by an 829B tube. These would require 200 volts at about 750 milliamperes to produce 100 volts of output.

At this point the possibility of using the principle of distributed amplification for the output stage began to look attractive. It was seen that it was theoretically possible to get twice the bandwidth with one-quarter the plate power requirement and with roughly one-eighteenth the input signal by using distributed amplifiers in place of the 829B tubes. The advantages appear tremendous, but we thought them to be offset by the probability of extreme wave-form dis-

tortion. No data were available on the transient response of distributed amplifiers, so we decided to mock-up one and observe its response.

In the conventional amplifiers, the tubes are connected in cascade, the total gain being the product of the gains of each stage. To increase the bandwidth, the gain per stage must be reduced, the product of gain and bandwidth having an upper limit for any given tube. Matters are not improved by connecting tubes in parallel because the circuit capacity, which limits the bandwidth, is more than doubled. It can be arranged, however, so that a number of tubes are driven, not at the same time, but in sequence by the input signal, with their outputs being delayed appropriately and added. This is the principle of distributed amplification. The grid to ground capacities of the tubes form the capacitive elements of a low pass filter, otherwise known as a lumped constant delay line. The plates are connected to another line with the same propagation constant. As a signal wave travels down the grid line it causes a wave to propagate in both directions at each successive plate. The waves in the forward direction add in phase. Those in the reverse direction do not and are absorbed in the terminating resistors. The total gain is the sum of the gains of the individual tubes. Such an amplifier is shown schematically in Fig. III-1.

After trying constant K type lines with plates paired as suggested by Gington et al[1], we settled on an M derived line because of its very superior phase response[2]. The lines are wound on quarter-inch polystyrene rods as shown in Fig. III-2. The plate lines were designed for a 600 ohm characteristic impedance, but for some reason 530 ohms are required for proper termination. The complete schematic of the amplifier is shown in Fig. III-3. It will be seen that the input end of the grid line and the output end of the plate line are left unterminated. Overall gain is greater by a factor of 4, but termination of the other end is made more critical. A 600 ohm Sprague 10 NIT resistor shunted to 530 ohms with a 1 watt carbon resistor provides a satisfactory termination for the plate line, but it was found necessary to add a small inductance in series with the half-watt carbon resistor in the grid line. Because there is dissipation in the grid line, an inductive termination is required. If the termination is made correct near the top of the band there will be no serious reflections. Also to be considered is the stray capacity to ground in the termination. This capacity should be resonated out by inductance.

The overall amplifier requires about 1.2 volts input to produce 70 volts output across the deflection plates. It has a rise time of better than 0.006 microseconds. Photographs of the oscilloscope trace are shown in Fig. III-4. They were

[1] Distributed Amplification, Gington, Hewlett, Jasberg and Noe, Proc. I.R.E., August 1948, Vol. 36, 8.

[2] Equalized Delay Lines, Hallmann, Proc. I.R.E., Sept. 1946, Vol. 34, 9.

NOT CLASSIFIED

Dr. 6935

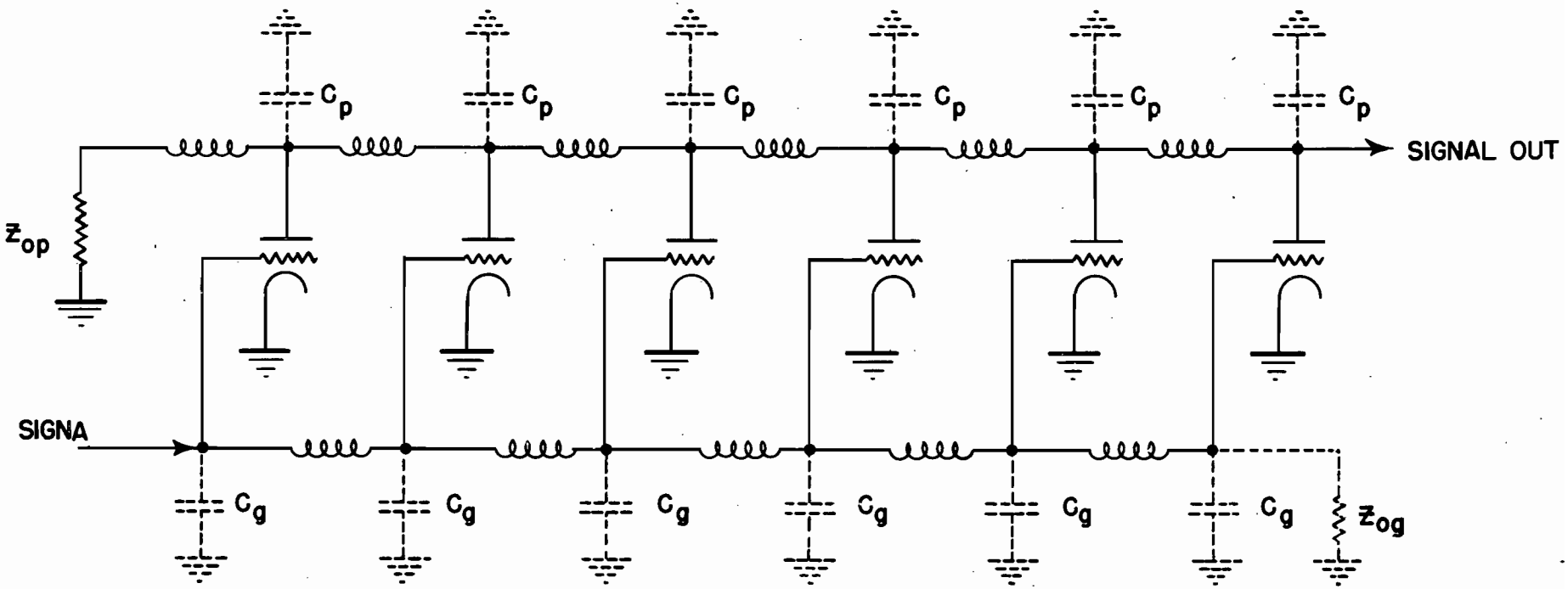

FIG. III – 1

NOT CLASSIFIED

Dr. 6936

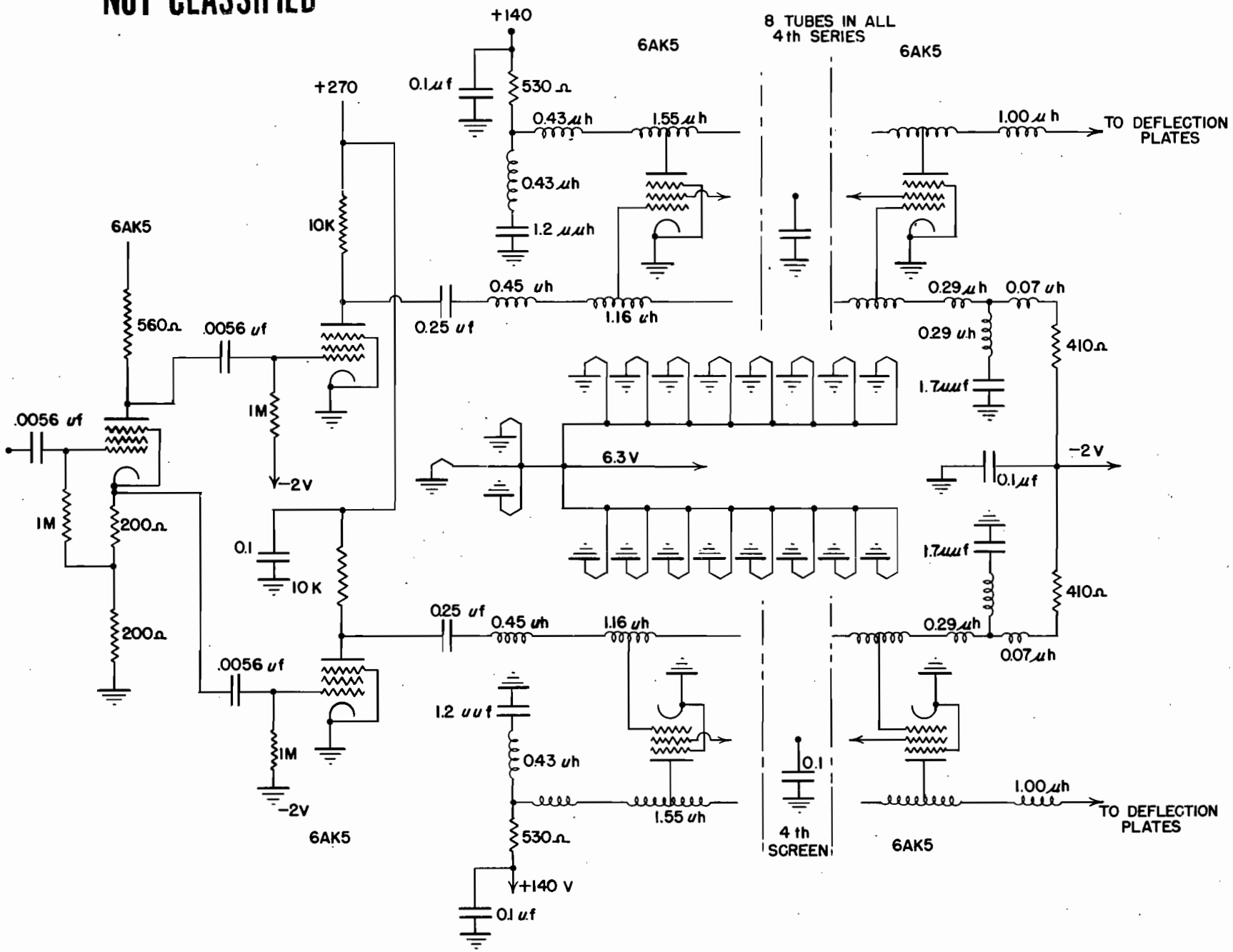

FIG. III - 2

Dr. 6937

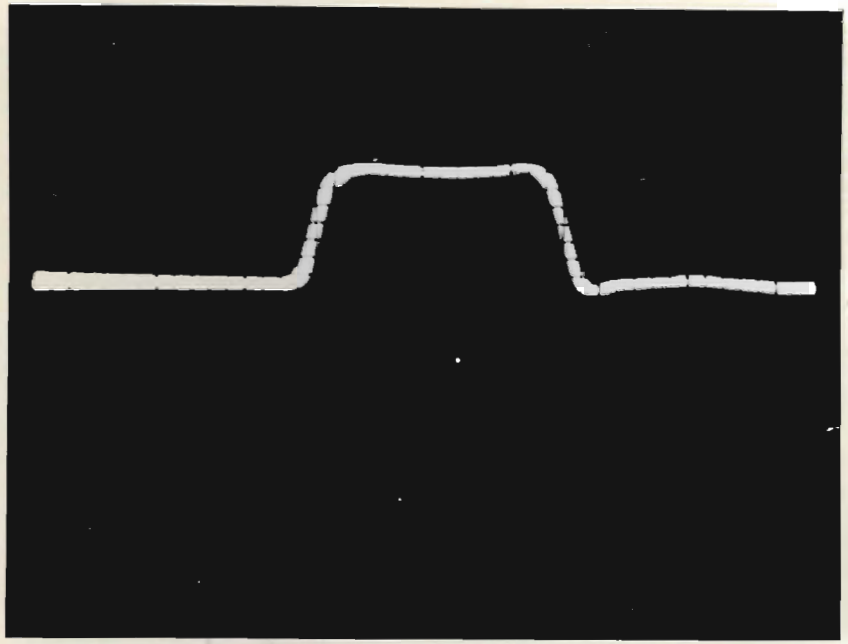

FIG. III -3-A

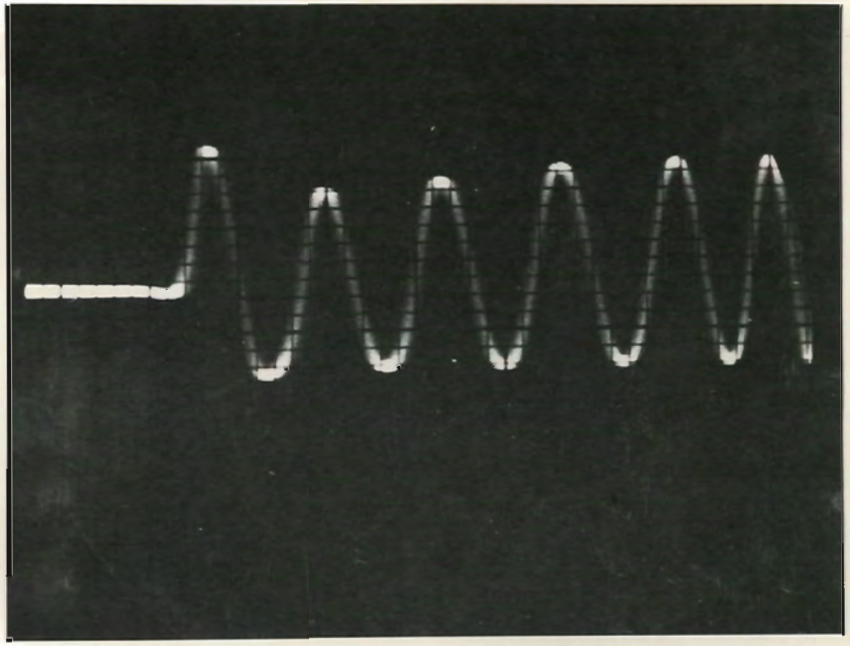

FIG. III -3-B

taken with a pulse generator having a rise time of about 0.002 μ-sec. connected to the amplifier input. The time scale is established by the pulsed 30 mc/sec sine wave also shown. We intend to drive this amplifier through a coaxial cable from a preamplifier having a gain of about 10.

SHORT-LIVED ISOMERS

(F. K. McGowan)

A systematic search has continued for short-lived isomers in nuclei by the method of delayed coincidences between two scintillation counters as detectors. This investigation includes the region between 10^{-7} to 10^{-3}. The measurement of shorter time intervals is limited by the finite rise time of a linear amplifier. That is, a pulse height selector operating on the output signal introduces a variable delay resulting from the different size of the pulses accepted. In the delayed coincidence circuit being used for the measurement of time intervals in the region 10^{-7} to 10^{-6} sec., the variable delays have been minimized somewhat more over that reported previously. By replacing the G. E. delay lines in the modified pulse height selector by RG65/U delay line and accepting signals at the output greater than 12 volts but less than 120 volts, the maximum variable delay has been reduced to ~.08 μ-sec. The condition that a coincident event will not be recorded is that the delay introduced by the delay line is greater than the average resolving time (.07 μ-sec.) of the coincidence circuit plus the maximum relative delay due to the pulse height selector. The dependence of delay time on line length was measured with a synchroscope having a sweep speed of 3 inches/μ-sec. All delays from .02 to 1.0 μ-sec. were found to be linear with the length of the coaxial cable.

The decay of Ge^{72*} has been remeasured several times. Goldhaber, et al report the half-life of the state to be $(5 \pm .5) \times 10^{-7}$ sec. which was measured by the method of delayed coincidences using G.M. counters as detectors. Our measurements consistently give a result of $(2.9 \pm .3) \times 10^{-7}$ sec.

The following isotopes have been investigated for short-lived isomeric states that might be produced by the beta-decay of the radioactive parent isotope:

Tm^{170}(125 da) Yb^{170}, Ba^{139}(1.5 hr) La^{139}, Br^{82}(34 hr) Kr^{82},

Y^{90}(60 hr) Zr^{90}, As^{76}(27 hr) Se^{76}, Cr^{51}(28 da) V^{51},

Os^{193}(17 da) Ir^{193}, Sr^{89}(55 da) Y^{89}, Au^{198}(2.7 da) Hg^{198}

Hf^{181}(46 da) Ta^{181}(for the region $10^{-7} \pm 10^{-9}$ sec.),

Ce^{141}(30 da) Pr^{141}, Ru^{103}(42 da) Rh^{103}, $Sn^{?}$ (long) $Sb^{?}$,

Fe^{59}(46 da) Co^{59}.

No delayed coincidences above the expected delayed random coincidence rate were detected. In general, for the isotopes listed, the delayed random coincidence rate occurs for delay time $T \geqslant .15$ μ-sec., as would be expected if no short-lived isomeric state existed within the sensitivity of the instruments to detect such states.

There have been four cases investigated (not listed above) for which there is a slight excess of delayed coincidences above the random rate for $.15 \leqslant T \leqslant .30$ μ-sec. The half-life of such states would be considerably less than .1 μ-sec. At the present one cannot say whether the counts are real or instrumental. As more negative results are accumulated a comparison of the pulse height distribution of the signals from the photo-multiplier tubes should provide a criterion for the validity of these results.

NEUTRON DECAY EXPERIMENT

(F. Pleasonton, A. H. Snell)

The main effort in the past quarter has been devoted to improving the dependability of the detecting equipment with which we hope to find coincidences between the beta particles of neutron decay and the resulting protons. The protons are gathered in an electrostatic focusing field, and are accelerated onto an electron multiplier for detection. The beta particles are allowed to pass (without focusing) into a two-celled Geiger counter; cell A and cell B are arranged in telescope so that they look at the neutron sample. What we really seek, then, are triple coincidences between cell A, cell B and the multiplier.

As mentioned in the last quarterly report (ORNL 228), Dr. W. H. Jordan designed a new and improved coincidence circuit for us, and after it had been worked over by J. Gundlach we put it on our apparatus. The block diagram of the circuit is given in Fig IV-1. It will be noticed that a delayed channel has been provided such that purely random coincidences can be counted simultaneously with the genuines plus randoms. This is a major factor in convenience. Naturally the resolving times (about 1.5 μ-sec.) in the total and the random coincidence stages have been carefully matched so as to make this procedure legitimate.

After this circuit had been tried for a while it became apparent that the very high single counting rates in cells A and B of the Geiger counter were a major factor in making the coincidence work unreliable. Tests made by bringing up sources showed that at these counting rates the counter was far from additive. In spite of this, we give herewith (Table IV-1) some of these coincidence results, with the thought that they must be taken as indicative rather than final.

In Table IV-1, "Boron in" means that the slow neutrons are removed by a boron shutter in the beam. "Foil closed" means that a thin Al foil has been placed over the entrance to the multiplier so as to stop the protons, and "Voltage off" means that the proton collecting and accelerating voltage is removed. Thus for I, II, and III the figures in the last column should agree and should show the coincidence counts arising from decaying neutrons; for IV and V, on the other hand, the figures in the last column should be zero.

We think that the results of Table IV-1 are rather strongly indicative of a neutron decay effect, but rather than worry about some of the internal inconsistencies shown, we have recently been working on improving the Geiger counter.

FIG. IV-1

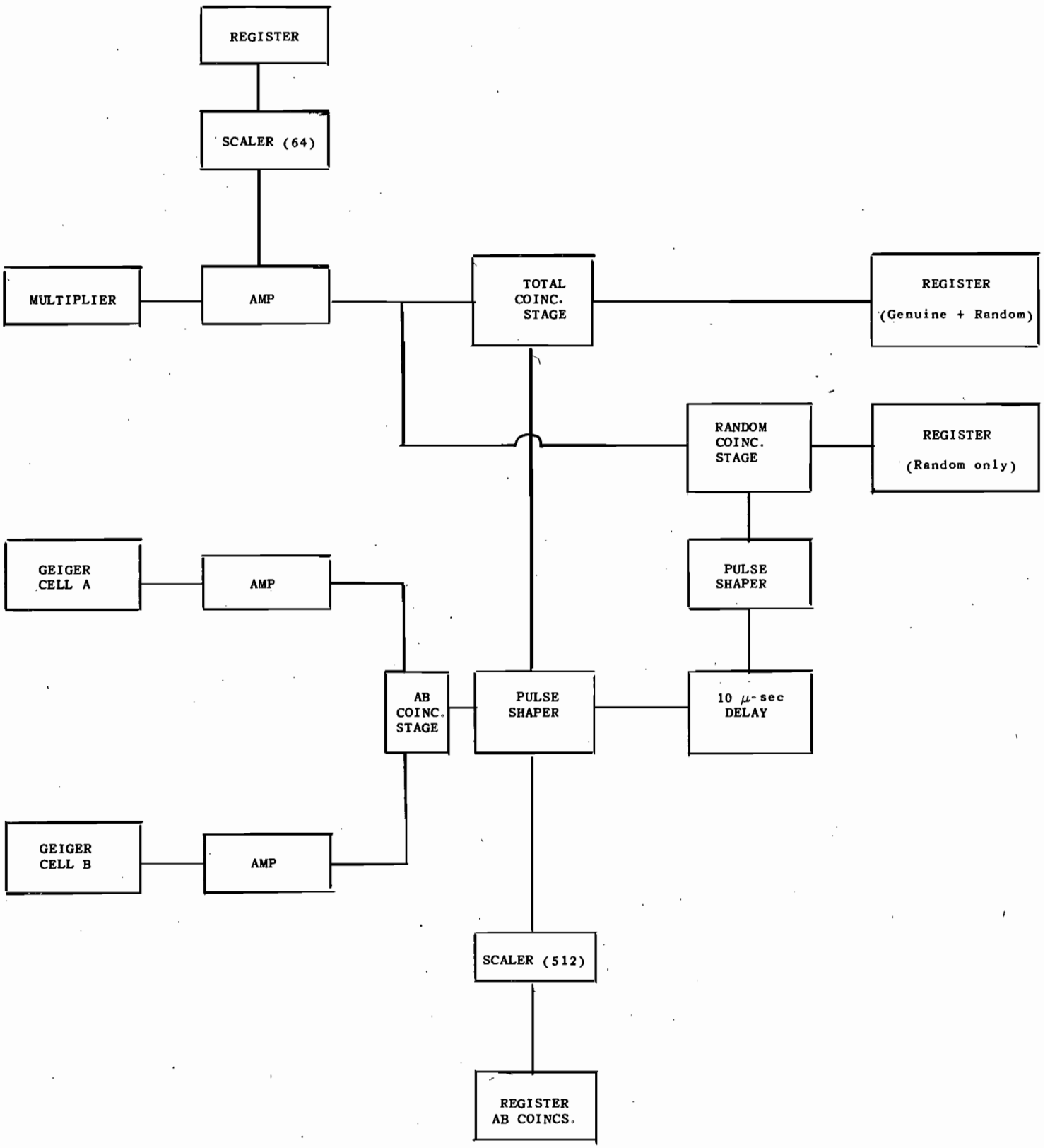
REGISTER
SCALER (64)
MULTIPLIER
AMP
TOTAL COINC. STAGE
REGISTER (Genuine + Random)
RANDOM COINC. STAGE
REGISTER (Random only)
PULSE SHAPER
GEIGER CELL A
AMP
AB COINC. STAGE
PULSE SHAPER
10 μ-sec DELAY
GEIGER CELL B
AMP
SCALER (512)
REGISTER AB COINCS.

TABLE IV-1

COUNTING RATES (all figures in counts per minute) UNDER VARIOUS CONDITIONS

I PROTON COLLECTING VOLTAGE ON; FOIL OPEN

	BORON IN	BORON OUT	BORON DIFFERENCE	GENUINE COINCIDENCES
Genuine + Random	1.66 ± 0.06	3.09 ± .12	1.43 ± .13	0.89 ± .18
Random	1.29 ± 0.06	1.83 ± .10	0.54 ± .12	
AB coincidences	56.3 x 512	64.8 x 512	----	
Mult.	28.4 x 64	37.2 x 64	8.8 x 64	

II BORON OUT; FOIL OPEN

	COLL. VOLTAGE ON	COLL. VOLTAGE OFF	VOLTAGE DIFFERENCE	
Genuine + Random	3.28 ± 0.11	2.47 ± 0.10	0.81 ± 0.15	0.52 ± .19
Random	2.32 ± 0.07	2.03 ± 0.09	0.29 ± 0.11	
AB coincidences	70.0 x 512	71.4 x 512	----	
Mult.	40.2 x 64	61.6 x 64	8.6 x 64	

III BORON OUT; VOLTAGE ON

	FOIL OPEN	FOIL CLOSED	FOIL DIFFERENCES	
Genuine + Random	3.09 ± 0.10	1.50 ± 0.06	1.59 ± .12	1.08 ± .15
Random	1.92 ± 0.08	1.41 ± 0.06	0.51 ± .10	
AB coincidences	64.0 x 512	64.5 x 512	----	
Mult.	39.4 x 64	25.4 x 64	14.0 x 64	

TABLE IV-1 (cont.)

IV BORON IN; FOIL OPEN

	VOLTAGE ON	VOLTAGE OFF	VOLTAGE DIFFERENCE	GENUINE COINCIDENCES
Genuine + Random	2.06 ± 0.08	1.75 ± 0.07	0.31 ± 0.11	0.30 ± .15
Random	1.60 ± 0.07	1.59 ± 0.07	0.01 ± 0.10	
AB coincidences	59.8 x 512	61.0 x 512	----	
Mult.	33.0 x 64	30.7 x 64	2.3 x 64	

V BORON IN; VOLTAGE ON

	FOIL OPEN	FOIL CLOSED	FOIL DIFFERENCE	
Genuine + Random	1.77 ± 0.09	1.39 ± 0.08	0.38 ± .12	0.14 ± .16
Random	1.30 ± 0.08	1.06 ± 0.07	0.24 ± .11	
AB coincidences	60.0 x 512	59.7 x 512	----	
Mult.	29.7 x 64	24.0 x 64	5.7 x 64	

For this purpose we have taken the advice of W. H. Jordan and P. R. Bell, and have revised matters so that the counters A and B will be used in their proportional region instead of their Geiger region. This will, we hope, enable them to count very rapidly without loss, and also it will prolong their life. (Refilling the counter heretofore has been a frequent and awkward procedure.) The necessary circuit work has just been completed by W. H. Jordan and T. E. Cole; the experiment will soon be tried.

Another physical change has just been made in the neutron decay apparatus--the vacuum tank has been extended. This was done with two objectives: (1) to double the distance between the multiplier and the exit window through which the beam leaves the vacuum tank, and (2) to provide room for electrostatic collection of low energy electrons which might be scattered back from the exit window. It is hoped that this change may reduce background effects in the multiplier. Readings will soon be taken to see if the hopes are realized.

Table IV-2 gives another set of non-coincidence data, such as we have obtained in the past, using the multiplier alone.

TABLE IV-2

VARIOUS DIFFERENCES IN UNITS OF 64 COUNTS PER MINUTE

Probable errors ± 0.2 throughout.

I FOIL DIFFERENCES

	VOLTAGE ON	VOLTAGE OFF
Boron out	10.8	4.4
Boron in	3.6	3.6

II VOLTAGE DIFFERENCES

	FOIL OPEN	FOIL CLOSED
Boron out	4.5	-1.9
Boron in	-2.0	-2.0

III BORON DIFFERENCES

	VOLTAGE ON	VOLTAGE OFF
Foil open	7.4	0.7
Foil closed	0.2	0.1

In Table IV-2 the figures 10.8, 4.5 and 7.4 would be taken as those which should agree, and should show the neutron effect--in an ideally clean experiment. The fact that all the other difference figures are not zero shows, however, that the experiment is not ideally clean. Thus one can be led to argue that of the 10.8 × 64 cpm given in the first line of the table, 4.4 × 64 cpm are not voltage-dependent and therefore cannot arise from decay protons. Following this line of reasoning, the following array of figures can be derived from the differences given in Table IV-2 (units still 64 cpm):

Voltage effect on foil difference, boron out	10.8 - 4.4 = 6.4 ± 0.3
Boron effect on voltage difference, foil open	4.5 - (-2.0) = 6.5 ± 0.3
Foil effect on boron difference, voltage on	7.4 - 0.2 = 7.2 ± 0.3
Voltage effect on boron difference, foil open	7.4 - 0.7 = 6.7 ± 0.3
Foil effect on voltage difference, boron out	4.5 - (-1.9) = 6.4 ± 0.3
Boron effect on foil difference, voltage on	10.8 - 3.6 = 7.2 ± 0.3

The agreement between these figures is obviously striking, and one might take it as an ad hoc justification of a procedure which might not stand up against the attacks of a militant logician. If one goes ahead on the assumption that the average of these figures, viz., 6.7 × 64 cpm is the count really arising from the decay protons, one can derive the corresponding neutron half-life as follows:

no. of neutrons in sample:	3.67×10^4
proton collecting efficiency:	80%
multiplier grid transparency:	75%
proportion of proton pulses counted at discriminator bias used:	32%

$$\text{Neutron half-life} = \frac{0.693 \times 3.67 \times 10^4 \times .80 \times .75 \times .32}{6.7 \times 64}$$

$$= 11.4 \text{ min.}$$

Our confidence in this figure awaits the arrival of some clean-cut coincidence results.

NEUTRON MEASURING TECHNIQUES

(J. K. Bair*, Grace McCammon)

The work on lithium loaded photographic plates has continued. The main effort has been to obtain a better estimate of the necessary increase in the ratio of fast neutron lithium disintegrations to recoil protons. Considerable time has been spent attempting to read a plate exposed by Dr. W. K. Ergen* in a favorable position in a pile shield sample. These readings are complete but have not as yet been calculated.

At the request of NEPA, Eastman will attempt to produce lithium loaded plates which would be more suitable for the above work. They have several ideas which they will try. Eastman hopes to have sample plates available in perhaps two months, although no definite delivery dates have been made.

It has been proposed by Feld and others that exoergic n-p reactions be used as the basis for a low energy neutron spectrometer by measuring the pulse height distribution of the ejected protons. Nitrogen was suggested as the active element. The nitrogen n-p cross section has been measured by Barschall and Battat up to about 1.7 mev neutron energy. The cross section varied slowly with neutron energy to about 0.5 mev. Fairly sharp resonances were found at approximately 0.55 and .71 mev with a wider resonance at 1.45 mev. It has also been proposed that such a detector, at least in the region below the first resonance, might be useful in investigating the existence of low energy inelastic scattering levels.

We have investigated an alternate method using a nitrogen filled counter to investigate inelastic scattering levels. In this new technique, for example, monoenergetic neutrons from the lithium p-n reaction would be scattered by the material under investigation into the nitrogen filled counter. The resulting counter pulses, after amplification, would be fed into a single channel differential discriminator. The discriminator bias and channel width would be adjusted so that only those pulses whose height indicated that they were the result of neutrons absorbed by the 0.55 mev nitrogen resonance would be recorded. One would thus have a detector sensitive <u>only</u> to neutrons of a narrow band of energies centered about 0.55 mev. From a plot of the counting rate of such a detector as a function of the energy of the neutrons incident on the scatterer, one can obtain information concerning the location of the level involved, its width, and its cross section for neutrons of the bombarding energy. If the work were repeated using the .71 mev nitrogen

* On loan from NEPA.

resonance, the curve would be shifted toward higher bombarding energies and thus a new cross section is obtained corresponding to the new energy. In this manner some information on the variation with energy of the individual level cross sections could be obtained. The proposed method will probably be limited to the region below about 1.5 mev because of such effects as the nitrogen n-α reaction and nitrogen recoils.

Rough calculations indicate that with proton beam currents of 50 microamperes on lithium, sufficient neutron intensities should be available to make this technique workable. It also appears that a suitable high pressure nitrogen chamber is not impossible.

A technique such as that proposed here would have several advantages over the more usual procedure of varying the position in energy of the discriminator channel. Among these advantages can be listed:

(a) to determine the location of the inelastic level it is <u>not</u> necessary to know the nitrogen n-p cross section.

(b) if, as is probably the case, the inelastic level width is much greater than the nitrogen n-p resonance width, it is not necessary to know the nitrogen n-p cross section to determine the inelastic level width.

(c) the only values of the nitrogen n-p cross section which are needed are those at the two resonances.

(d) the values of the nitrogen n-p cross section at the 0.5 and 0.7 mev resonances are relatively large (approximately 0.08b at 0.5 mev and 0.16b at 0.7 mev as compared to 0.04b on the flat portion of the curve between 0.2 and 0.4 mev.

(e) the necessity of correcting the counting rate for the rapid variation in σ_{n-p} versus energy is completely avoided.

(f) wall effects in the chamber are not important.

The Harshaw lithium fluoride optical crystal has been tested by P. R. Bell and found to give no measurable pulses. Harshaw also furnished a sample of lithium fluoride which had gone bad in the process of manufacture. As this latter sample was fluorescent, although weakly so, it was tested for ability to count. While counts were obtained, they were not such as to make a usable crystal counter. A spectroscopic comparison of these two crystals (fluorescent and non-fluorescent) revealed no notable difference. A crystal of spodumene is now available, but has not been tested as yet.

Samples of Corning's "photosensitive glass" have been obtained. These samples were exposed to both gamma rays and alpha particles. Macroscopic examination reveals quite low sensitivity. A microscopic examination of a sample exposed to an alpha source failed to reveal any observable tracks, probably due to the exceedingly small grain size.

THEORETICAL PHYSICS

(M. E. Rose)

Since the last quarterly report there have been three major developments in theoretical work done.

The first is concerned with the calculation of internal conversion coefficients for the K-shell. Previously the only work on internal conversion coefficients which the experimentalist could use with assurance were the results of the British group (electric dipole-Hulme, electric quadrupole, Taylor and Mott, and magnetic dipole, quadrupole and octupole, Taylor and Fisk). Unfortunately this work was confined to Po ($Z = 84$) and because of the rapid and essentially unknown Z dependence one could not expect to extrapolate to even neighboring values of Z without making errors of order 100 percent or even much more. The approximate formulae (Uhlenbeck-Hebb, Drell, Dancoff-Morrison) break down badly for any practical values of Z over a certain range of gamma ray energies ($k\,mc^2$). For instance, as a result of the calculations described below it is known that at $Z = 40$ and $k = 0.3$ the non-relativistic formulae are in error by factors from 2 to 10 for the various multipoles. To supply reliable values of internal conversion coefficients it is necessary to use essentially exact wave functions. Accordingly the problem was set up, about a year ago, using Dirac hydrogen-like wave functions. In this stage and in the coding of the problem G. Goertzel and B. Spinrad also worked on the problem. For the K-shell it was felt that screening could not make more than about two percent error, (see below). Numerical computations correct to four significant figures were carried out by J. Harr and P. Strong at the Harvard Computation Laboratory for $Z = 40$, 54, 64, 72, 78, 83, 88, 92 and 96 and $k = 0.3$*, 0.5, 1.0, 1.8, 3.0 and 5.0 and for electric and magnetic multipoles of order 2^{ℓ} with $\ell = 1$, 2, 3, 4 and 5. For these 500 calculated values, an additional 2560 values were obtained by graphical interpolation. By extensive comparisons the graphical interpolation is estimated to give results accurate to within 2 percent. After this work was done it was recognized that values of internal conversion coefficients for $Z < 40$ would be needed to complete

*The values at $k = 0.3$ were obtained for the first five Z values only.

the K-shell problem once and for all. A request for additional calculation at $Z = 10$, 20 and 30 has been forwarded to Professor H. Aiken of the Computation Laboratory and it appears that the committee on Applied Mathematics at Harvard University has already agreed to this extension of the work.

A few calculated points were obtained independently by the group working in the Computation Division of the Department of Mathematics at the University of Toronto. This group, with whom the writer conferred recently, has abandoned the K-shell work in view of the more extensive program which was undertaken and essentially completed here. Where the Toronto calculations overlap ours, the agreement is within one percent. Another calculation which came to light recently was done by H. R. Coish and J. B. French for the National Research Council of Canada. Here six values were calculated for Ba ($Z = 56$). These results also agree with our work. Finally, J. Rietz of the University of Chicago has recently computed relativistic wave functions with screening and exchange and, using these, he has computed internal conversion coefficients for low energies where screening should be most important. Even for the largest Z values the effect of screening, according to Rietz, is only a few percent thus justifying the above procedure.

The second problem forms a natural extension of the ordinary internal conversion. When the gamma-ray energy is of order 5 mev or more the conversion of atomic electrons becomes too small to observe in many cases. However, conversion with pair formation then becomes important. In fact the latter effect is characterized by a probability increasing with k. Here one can solve the entire problem with sufficient accuracy by the Born approximation as was shown by the writer in 1935 so that extensive numerical calculations are unnecessary. The electric and magnetic conversion coefficients for arbitrary multipole order have now been worked out. A check on this work was obtained by (1) comparison with the electric dipole and quadrupole previously calculated by Oppenheimer and Nedelsky (1933) and with the magnetic dipole previously obtained by the writer (1935) and (2) by noting that the independence of the coefficient on multipole order is fulfilled asymptotically ($k \to \infty$). Angular correlations as well as energy distributions were obtained in every case.

The third problem is concerned with the effect of the Coulomb field in electron-neutrino correlation. The question to be answered is the following: The predicted angular correlation for allowed spectra neglecting the Coulomb field is $1 + n\,\beta \cos\theta$ where $\beta = v/c$ and θ the angle between electron and neutrino. For the five interactions forms in β-decay n takes on four different

values ranging from -1 to 1. In particular for Fermi interaction $n = 1$ and for Gamow-Teller $n = 1/3$. Can the Coulomb field change n in such a way as to lead to false conclusions for the interaction form in the comparison of observations and the simple theoretical result valid for $Z = 0$? The answer is in the negative. The effect of the Coulomb field is to change n by a factor which is the same for all five forms and which does not differ from unity by more than about 20 percent in any case.