UNCLASSIFIED

ORNL 335
CHEMISTRY-GENERAL

7A

MARTIN MARIETTA ENERGY SYSTEMS LIBRARIES
3 4456 0360416 0

TECHNICAL DIVISION

"THE ARCHITECTURAL APPROACH TO RADIOCHEMICAL LABORATORY DESIGN"

A.D. MACKINTOSH, A.I.A.

OAK RIDGE NATIONAL LABORATORY
CENTRAL RESEARCH LIBRARY
CIRCULATION SECTION
4500N ROOM 175
LIBRARY LOAN COPY
DO NOT TRANSFER TO ANOTHER PERSON
If you wish someone else to see this report, send in name with report and the library will arrange a loan.
UCN-7969 (3 9-77)

OAK RIDGE NATIONAL LABORATORY

OPERATED BY
CARBIDE AND CARBON CHEMICALS CORPORATION
FOR THE
ATOMIC ENERGY COMMISSION
POST OFFICE BOX P
OAK RIDGE, TENNESSEE

UNCLASSIFIED

UNCLASSIFIED

ORNL-335

This document consists 33 pages.
Copy 7 of 185 Series A

ISSUED:

Training School Lib

OAK RIDGE NATIONAL LABORATORY

CONTRACT NO. W-7405-eng-26

TECHNICAL DIVISION

"THE ARCHITECTURAL APPROACH TO RADIOCHEMICAL LABORATORY DESIGN"

A. D. Mackintosh, A.I.A.

DATE ISSUED

APR 13 1949

OAK RIDGE NATIONAL LABORATORY

Operated by

Carbide and Carbon Chemicals Corporation
for the
Atomic Energy Commission
Post Office Box P
Oak Ridge, Tennessee

MARTIN MARIETTA ENERGY SYSTEMS LIBRARIES

3 4456 0360416 0

UNCLASSIFIED

OAK RIDGE NATIONAL LABORATORY INTERNAL DISTRIBUTION AS FOLLOWS:

1. G. T. Felbeck (C&CCC)
2. 706-A Library
3. 706-A Library
4. 706-B Library
5. Biology Library
6. Health Physics Library
7. Training School Library
8. Training School Library
9. Central Files
10. Central Files
11. Central Files
12. Central Files
13. J. A. Swartout
14. J. H. Gillette
15. F. L. Steahly
16. A. Hollaender
17. J. H. Frye, Jr.
18. E. J. Murphy
19. M. D. Peterson
20. C. N. Rucker
21. W. D. Lavers
22. A. M. Weinberg
23. J. A. Lane
24. P. C. Tompkins (Y-12)
25. Henri A. Levy
26. T. W. Hungerford
27. A. C. Jealous
28. W. H. Ray
29-30. Central Files (Off-Plant)
31-55. A. D. Mackintosh

OAK RIDGE NATIONAL LABORATORY EXTERNAL DISTRIBUTION AS FOLLOWS:

56-65. Argonne National Laboratory
66. Armed Forces Special Weapons Project
67-68. Atomic Energy Commission, Washington
69. Battelle Memorial Institute
70-79. Brookhaven National Laboratory
80. Bureau of Ships
81-84. Carbide & Carbon Chemicals Corporation (K-25 Plant)
85-88. Carbide & Carbon Chemicals Corporation (Y-12 Plant)
89-96. Chicago Operations Office
97. Columbia University (Dunning)
98. Columbia University (Failla)
99-105. General Electric Company, Richland
106-113. Hanford Operations Office
114. Iowa State College
115-116. Kellex Corporation
117-120. Knolls Atomic Power Laboratory
121-126. Los Alamos
127. Massachusetts Institute of Technology (Gaudin)
128. Massachusetts Institute of Technology (Kaufmann)
129-136. Mound Laboratory
137-138. National Advisory Committee for Aeronautics
139-140. National Bureau of Standards
141-142. Naval Radiological Defense Laboratory
143. NEPA Project
144-151. New York Operations Office
152-153. North American Aviation, Inc.
154. Patent Advisor, Washington
155-156. Sandia Base
157-171. Technical Information Division, ORCO
172. UCLA Medical Research Laboratory (Warren)
173-178. University of California Radiation Laboratory
179-180. University of Rochester
181-184. Western Reserve University (Friedell)
185. Sylvania Electric Products, Inc.

ABSTRACT

"The Architectural Approach to Radiochemical Laboratory Design"

The subject is introduced by showing how a newly specialized field of Architecture has opened which must be approached with revised concepts.

General planning and layout is discussed, with thought given to various levels of radioactivity. It is pointed out that a modular system must be adhered to, in order to effect flexibility. Means to implement modular flexibility are described, as well as surface treatment, and decontaminability.

Service supply, including heating and ventilating, is discussed in modular terms, as well as equipment of a permanent and semi-permanent nature. Waste disposal facilities are then touched upon: gaseous, liquid, and solid.

The conclusion reached is that flexible space of a "universal" nature must be provided, as well as a standardized design for equipment to be used therein.

A. D. Mackintosh, A.I.A.

"This document was prepared under the auspices of the Atomic Energy Project at the Oak Ridge National Laboratory."

"THE ARCHITECTURAL APPROACH TO RADIOCHEMICAL LABORATORY DESIGN"

			Page No.
I.	1.	Introduction	3
		a. Newly specialized field of Architecture	
		b. Many new concepts	
II.	1.	General Planning and Layout	4
		a. Various levels of activity	
	2.	Flexibility and Modular System	10
	3.	Shielding and Finishes	14
		a. Surfaces	
		b. Decontaminability	
		c. Replacement	
III.	1.	Supply of Services	17
		a. Modularly located connections	
	2.	Heating and Ventilating	19
	3.	Equipment	22
		a. Permanent	
		b. Semi-Permanent	
		c. Movable	
	4.	Waste	27
		a. Three levels of drain	
		b. Drains and Ducts	
		c. Refuse	
IV.	1.	Conclusion	30

"THE ARCHITECTURAL APPROACH TO RADIOCHEMICAL LABORATORY DESIGN"

Introduction

The current decade is embracing the most active growth of a recently born specialized field of architecture which now appears to be reaching adolesence (1). This field has been fostered by scientists and engineers working with the Manhattan District and A. E. C. Projects; it now looks toward a matured development with the further assistance of architects who are gaining needed background in Nucleonics. The goal to be effected is: The most desirable combination of elements which will provide housing for radioactive facilities needed for research, development and production in the various fields of Nucleonics.

Many new concepts must be formulated, and become assimilated, by those who plan to specialize in this work. For example, not only must materials used in design resist such forces as may be brought to bear upon them, withstand climatic attack, be readily fabricated, and where necessary, appear pleasing to the eye, but in addition the following factors also govern: resistance to severe chemical attack, shielding properties for protection from radioactivity, and above all, ability to be decontaminated, and/or replaced, with facility. Four factors have grown to seven, and we have gone no further than to consider properties of materials in general. One can see quite readily how complicated various aspects of such design have become. We shall now examine in more detail considerations which currently affect the Design of Radiochemical Facilities.

General Planning

Initial contact with a problem will require one to determine what elements must be incorporated into the final plan and layout. The architect specializing in this field realizes that his first thoughts must be directed toward the grouping of the elements with respect to the level of radioactivity which will be associated therein. There are three main factors which guide one in determining the permissable levels in a given area: effects on radiation backgrounds in juxtaposed areas, health hazards, and extent to which safeguards must be provided in order to control the two foregoing. Levels of activity, and the types of function included in each, can be summarized as follows (2) (3):

1. Sub-normal: Precision work of special types, and counting rooms.
2. "Cold", or normal*, activity: Offices, libraries, conference rooms, eating facilities, "regular" shops, storerooms, etc.
3. "Low Level": "Warm" shops and storerooms, laboratories for β and $\gamma \sim 10\,mC$, & $\alpha \sim \mu C$.
4. Alpha: Well ventilated laboratories for $\alpha > \mu C$.
5. "Semi-Hot": Well shielded laboratories for β and $\gamma > 10\,mC$, but $< 1C$.
6. "Hot": Areas housing cell blocks and caves, for β and $\gamma > 1C$.

Some special operations of the highest radioactive levels, must be placed well to leeward, and be separated by a low ridge, but this will not affect most sites, where level five will be the most active, if not level three.

Sub-normal level work must likewise be removed, but in the opposite direction, preferably to windward of "hot" work. Provision must be made to prevent any contamination of, or radiation being introduced into, such areas. Normally $\sim$ 2 ft.

*No greater than background due to natural radioactivity.

concrete will be needed to shield such spaces, with access gained through a labarynth in order to keep out all extraneous radiation which might raise the background above the tolerance for instruments within. An attempt is made to keep areas as near zero activity as possible.

The level of cold, or normal, activity is where most of the administrative and service elements will be situated. Activity may here be slightly above normal background, but eating facilities must be kept scrupulously clean, especially with regard to α material; α radiation is not very penetrative and is, therefore, more difficult to detect than β or γ radiation. It is through the cold area that all access must be controlled to other levels (4). Frisking devices are here installed to detect any radioactive contamination on persons coming from areas of higher activity. The ideal juxtaposing of elements would be much as indicated in Figure 1.

In the low level area, will be located the bulk of the tracer work. Background in this section should be kept below 0.1 of tolerance ($\sim$1.25 mr/hr), as many delicate counting devices will be used in rooms adjacent to the labs. Juxtaposition of semi-hot labs with low level work may be necessary; in such a case the problem of preventing the introduction of activity is magnified. Doorway detectors and probes may be necessary to prevent spread of contamination from the semi-hot lab in this area to adjacent quarters. Only the cooperation of personnel can effect contamination control; facilities must make good procedure easy, and faulty ones difficult.

The Alpha area requires air locks to eliminate possible spread of α contamination to adjacent areas. No shielding problem is presented, however, due to the short range of α particles. Great care must be taken to keep all office space in this section free from contamination.

The semi-hot facilities will all need $\sim$ 2 ft. concrete around labs and

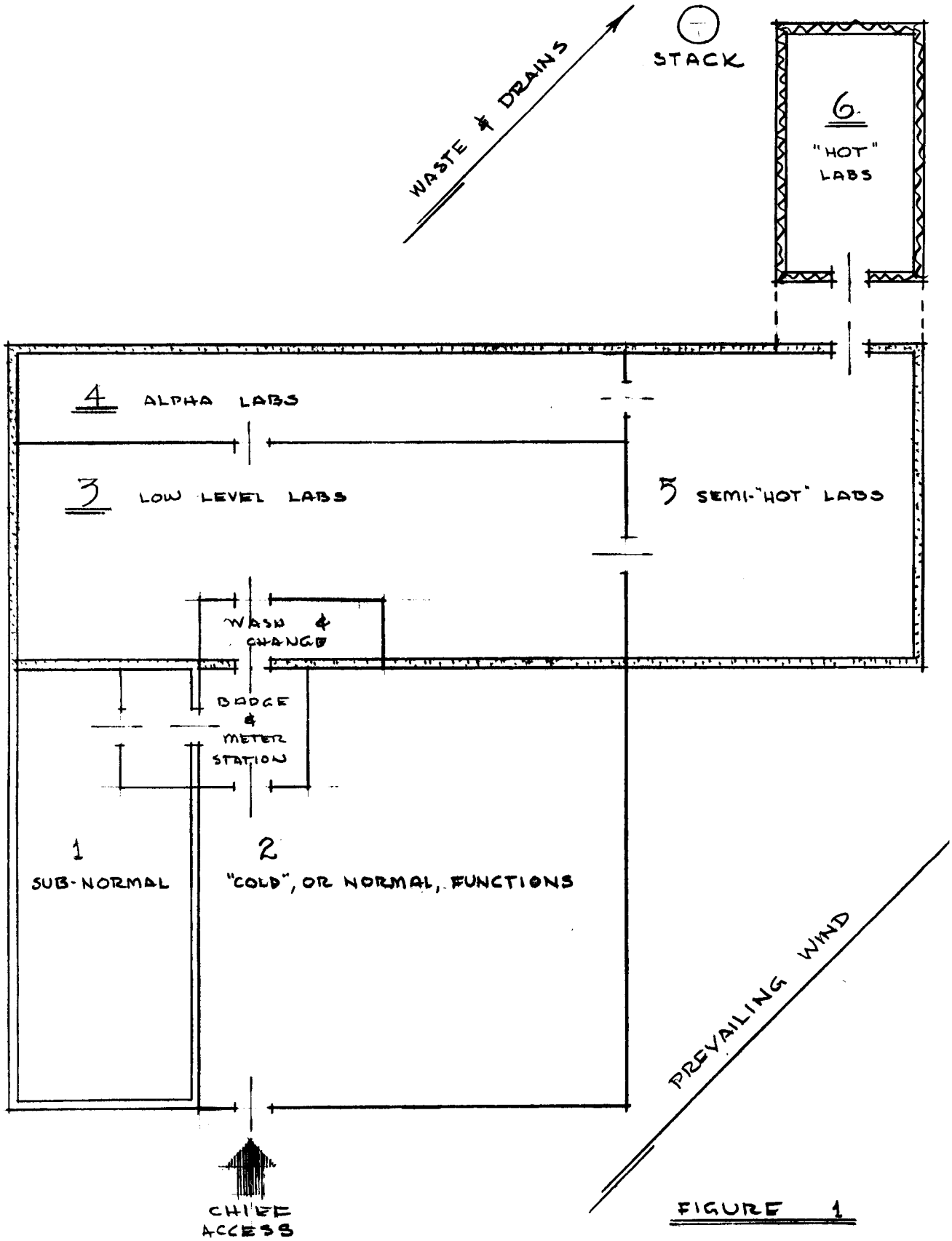

FIGURE 1

GENERAL RELATIONSHIP OF LOCATION FOR THE VARIOUS LEVELS OF RADIO ACTIVITY —

decontamination rooms, in addition to the local shielding which will be provided in the form of lead bricks to protect operators. Here, again, there will be offices and small counting facilities adjacent to semi-hot rooms; care must be taken that contamination does not raise the background level of these quarters.

Hot facilities will be entirely enclosed within some 3 ft. of concrete, in cells or caves (5). All operation will be by remote control, and carefully designed vents and drains will keep contamination from escaping the blocks and entering the work areas surrounding. This section will be as far removed as feasible from the sub-normal area.

It will be seen by referring to Figure 1, that one should go from one level of radioactivity to another in progressive, (or regressive), increments. Centrally located, would be a Health Physics checking station which would control all ingress and egress. Portable, personal meters would be picked up here for required use in the more active areas. Permanent frisking devices would check personnel in such manner as would be felt advisable; adjacent, would be wash rooms and clothing change facilities for personnel decontamination. Naturally, one cannot hope to adhere strictly to this layout of activity levels; it is quite schematic. For example, in the hot area, there will be needed some offices and record rooms. Likewise therein, may be required some semi-hot labs directly adjacent to various hot labs. It is up to the Architect to satisfy the needs of the function to be housed, the Health Physics demands, and the requirements of over-all design.

Opinion is at present divided as to whether all levels of activity should be incorporated into the same building, or should each type of activity be located in separate buildings connected with a covered passage. Both views have points in their favor. All in one building would reduce the cost of construction, minimize travel distances, and permit more flexibility of space use. However, in case of an accident or explosion in a hot lab, it is possible that much of the building might become

contaminated before emergency doors and other safety features could function. Perhaps a great part of the structure would become contaminated (usually by foot traffic) beyond hope of satisfactory decontamination operations. Much time would be lost in demolishing and rebuilding, as the adjacent facilities would all be directly affected. In separate buildings, the initial cost would be higher, but in case of explosion or a long term gradual building up of background, when a structure would become too hot for safe occupancy, it could be cleaned, or abandoned, without affecting adjacent areas in an undue manner. In our present thoughts, however, let us hold to the premise that all may be placed in a single structure, if so desired.

The areas indicated on Figure 1 may refer to grouping of separate buildings as well as a single building, but the general inter-relationship of facilities, and direction of prevailing wind and hot waste disposal, should be maintained as indicated, insofar as possible. The wind will then carry any escaping vapors away from cooler areas toward warmer ones. Stack gases from the hot areas will continue to dissipate in this direction; current developments should assist in future elimination of practically all activity from these stack gases. Liquid wastes, where a hot drain system is provided, will likewise follow this line so that vapors from evaporators and settling ponds will not tend to drift back toward the operation and administration areas. (19)

Let us now consider the vertical aspects of design, in general:

Sub-normal level: Two foot thick concrete walls and roof slab will be needed to protect delicate recording devices and instruments, as well as counting equipment, from radiations which would tend to raise the background level in this area. All such effects may be housed in a single structure, placed below the ground; it could then serve as a foundation for office space above, or labs dealing with low activities In any event, the sub-normal area must be well air conditioned; temperature and

humidity may need to be controlled with utmost prevision ($\sim \pm 5^{o}F$ and $\pm 1\%$). All incoming air should be filtered with efficient filters in order to remove the major portion of dust particles, with or without activity. Should the basement idea be adopted, the earth will shield bottom and sides, but a 2 ft. slab would need be placed between it and any superstructure.

Normal level: Little deviation from standard construction practices need be observed. True, prevailing wind and drain directions must be kept in mind, as shown on Figure 1, but any number of stories and vertical placement of facilities may be adopted in this area.

Low level and Alpha activity: The facilities in these areas may be placed on several floor levels, if necessary. The chief problems to provide for are proper shielding of hot drains and exhaust duct from β and γ sources in area 3, especially when originating above the ground floor, and careful evacuation of α contaminated vapors from area 4 labs. Counting rooms can, for convenience be located in these areas, but may need 2 ft. concrete walls and ceiling (also, floor, if there be activity below). In general, it is desirable to strive for the location of area 3 facilities, and counting rooms, at grade level; there will be motorized dollies with heavy lead shielding $\sim$ 3 T, and much local shielding employing lead bricks; counting rooms would need a 2 ft. floor slab, if placed over these labs. Shielding of hot drain vertical runs is much simplified when their point of origin is not above grade; likewise, exhaust from hoods, if led downward, need then have less protection. The tendancy now seems to lean toward overhead service and air supply, with downward exhaust of contaminated air as well as hot drains. The α labs may be located upstairs with less trouble, especially when using dry boxes for this work, rather than hoods. The dry box* requires less air for ventilation than the hood by a factor of $\sim$ 100. No shielding is needed for α drains and air exhaust; the chief problem is to insure against leaks of either liquid or vapor.

*See Note: Page 26

Semi-hot level: Here one must shield all labs with 2 ft. thick concrete walls, the entrances through which may be a labarinthed passage. If poured concrete is used, a multi-story structure may be developed, with little difficulty; there would, however, be no flexibility! More desirable, is to use but a ground floor and be able to form the 2 ft. interior walls of solid concrete block (some sites are considering aluminum block), which may be moved, when variation in layout is desired, without undue cost. This flexibility is most desirable. It does not, however, lend toward use of multi-story ideas, as the entire floor area would have to be designed to take heavy equipment, or thick walls, at any point throughout. To gain facile evacuation of waste liquid and vapors, again would induce one to make use of a single story structure even more than in area 3.

Hot level: Where one locates cell blocks and caves with ~3 ft. concrete walls; this would naturally be in separate buildings of one story each. Certain service functions, clothing change, equipment decontamination, offices, and attendant labs could be grouped about the main work area in one or more stories, depending on the function and its use.

Flexibility and Module

The factor of flexibility has been mentioned as most desirable. This can be attained better by adhering closely to a desirable modular system of planning. In order to expedite consideration of modules let us accept the premise of a 12/3 factor (see Figure 2 on following page). The structural system will be set up on 12 ft. (or 24 ft.) column centers, along the length of the building, with windows likewise located on 12 ft. centers; vertical service risers too, would be spaced on this 12 ft. module. The subdivision of 3 ft. would place lighting fixtures accordingly, and the windows on 12 ft. centers would be 5'-6" wide with a 3" mullion in the center. Interior partitions could then be 3" thick, movable, steel panels which could be

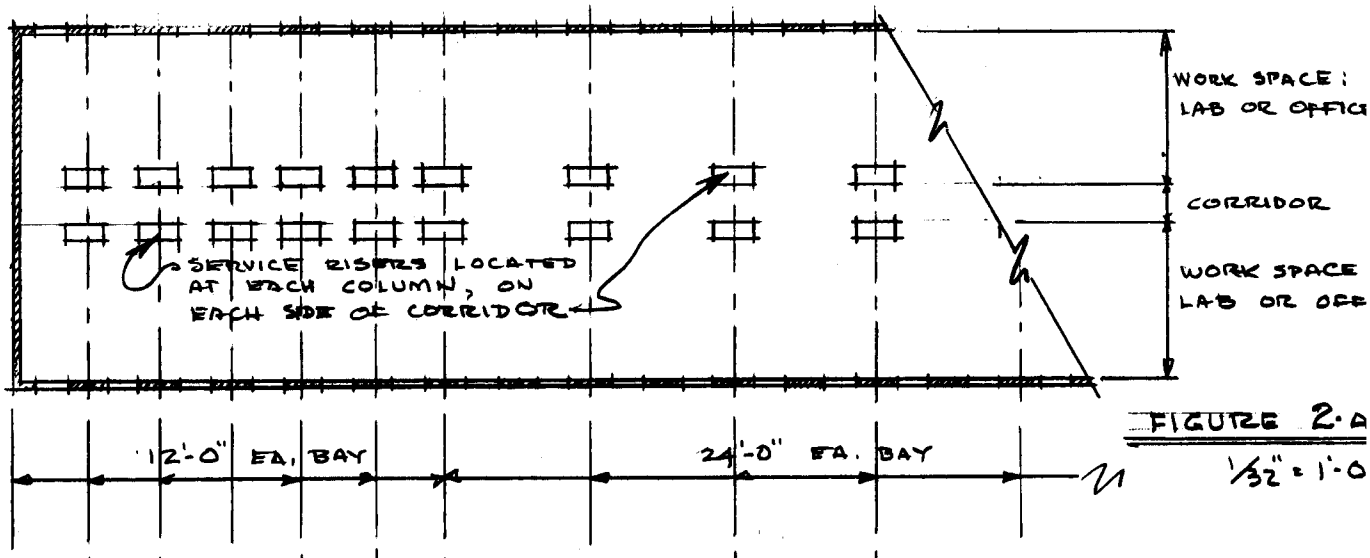

FIGURE 2-A

1/32" = 1'-0

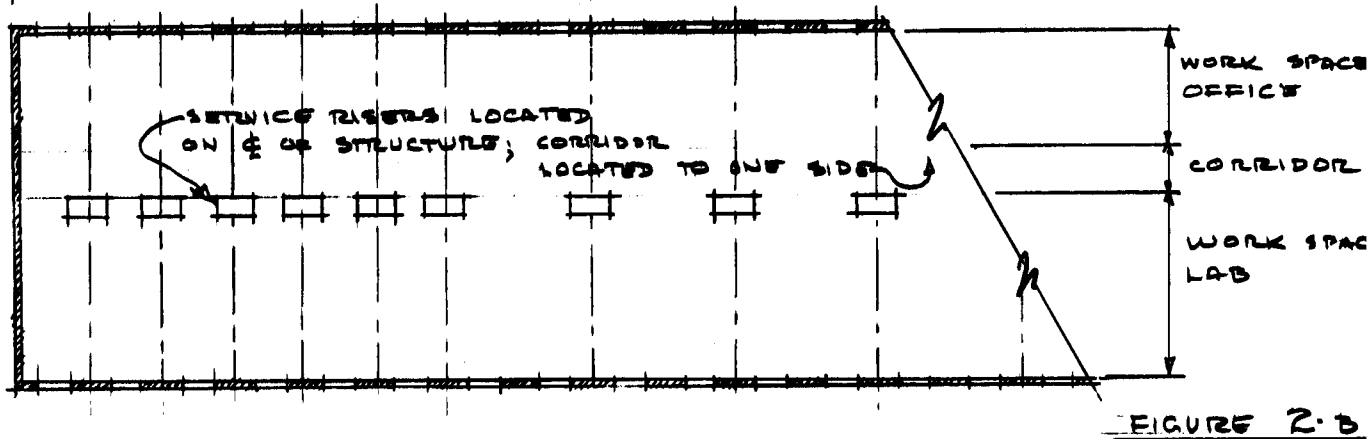

FIGURE 2-B

1/32" = 1'-0"

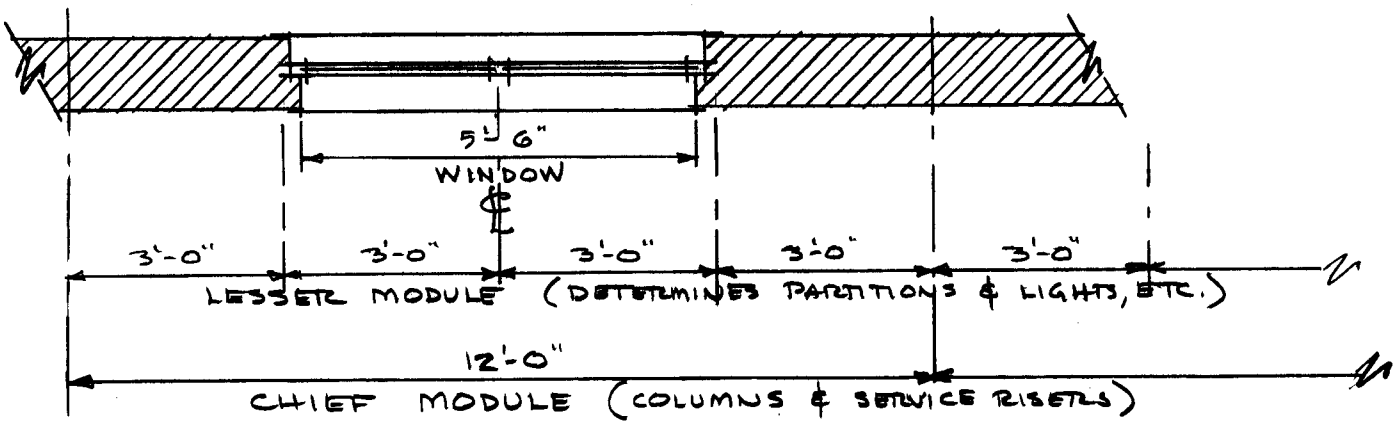

FIGURE 2-C

3/8" = 1'-0"

A MODULAR PLANNING PREMISE

located anywhere along the length of the building on 3 ft. centers. Whether we decide on a 12/3 module, or one of 12/4, 15/3, or 15/5 proportions, is of little interest here. We shall deal further with this when considering lab equipment. The important thing to remember is that uniformly located service risers, and positions for location of movable interoffice and interlab, partitions is most necessary in order to achieve flexibility.

In such a new field as radioactive chemistry, it is even harder to foresee than in normal activities, precisely what calls the future will make on equipment, and the layout thereof. Requirements will always be changing; in such a new field of science, one must be ever ready to alter sizes, shapes and positions of various functions in order to handle new problems with utmost facility. Again, when considering materials, we shall see further need for movable partitions in radiochemical laboratories.

The width which one should make the structures will vary. However, again the interior module of 3 ft. should aid in determining the precise figure at which one arrives. Should we use panels of 3 ft. (4 ft. or 5 ft.) width, the final clear dimension between hallway (or service riser) and exterior walls should be in multiples of this figure. So long as we maintain this factor, widths are of little matter (except structurally) and all movable partitions will fit neatly into any building or wing thereof; provided: we use a standard clear ceiling height (of, say 10 ft.) as a premise. There will naturally be exceptional cases where special treatment will be demanded. See Figure 3 (page 13) for typical lab and office layouts.

In the case of semi-hot labs which call for shield-partitions of 2 ft. concrete thickness, the solid block, 8" x 8" x 12", can be used with little or no morter, as a movable partition. Arguement will take place in favor of blocks having ridges interlocking with grooves in order to cut down on any collimated radiation which might come through the horizontal joints (vertical joints will be staggered).

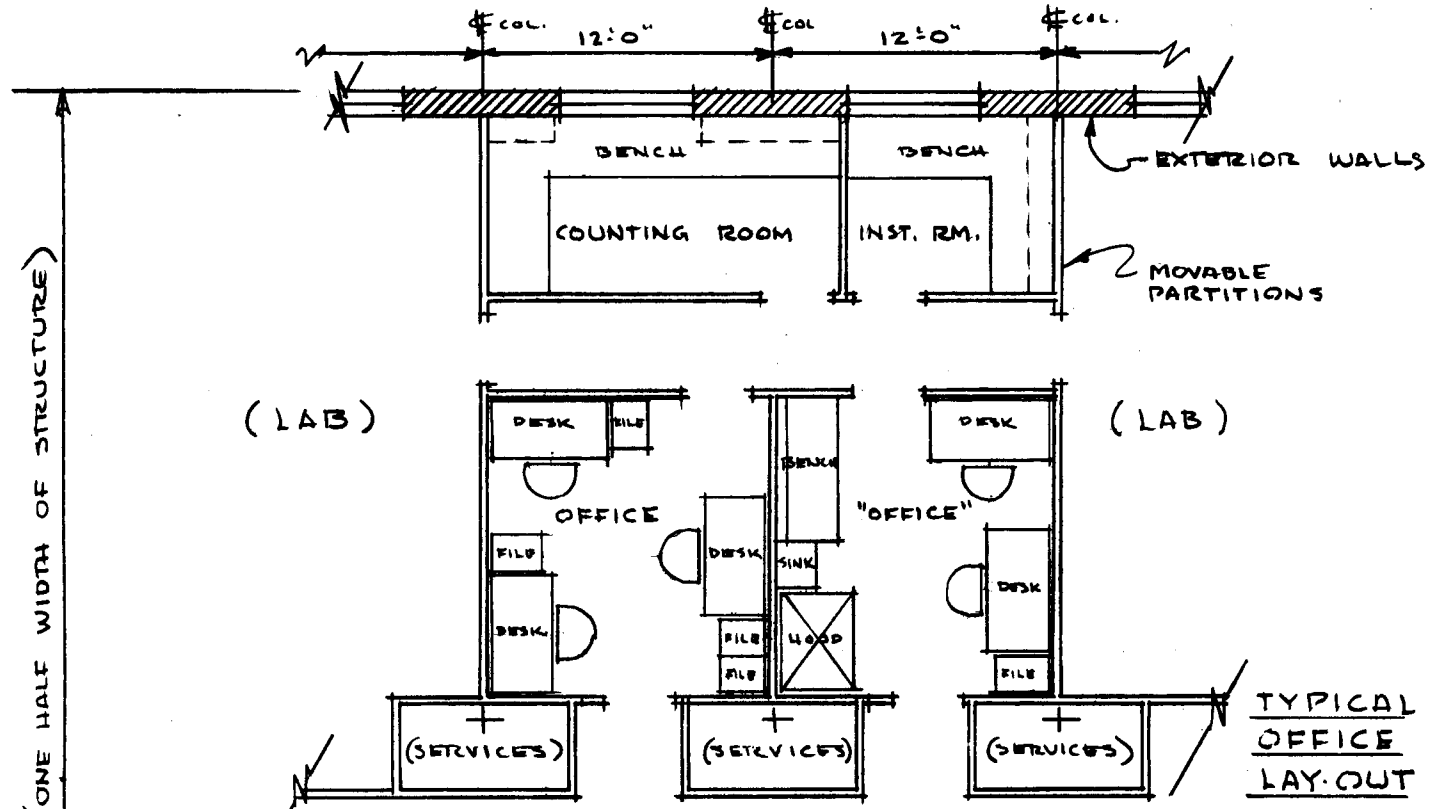

TYPICAL OFFICE LAY-OUT

FIGURE 3-A

1/8" = 1'-0"

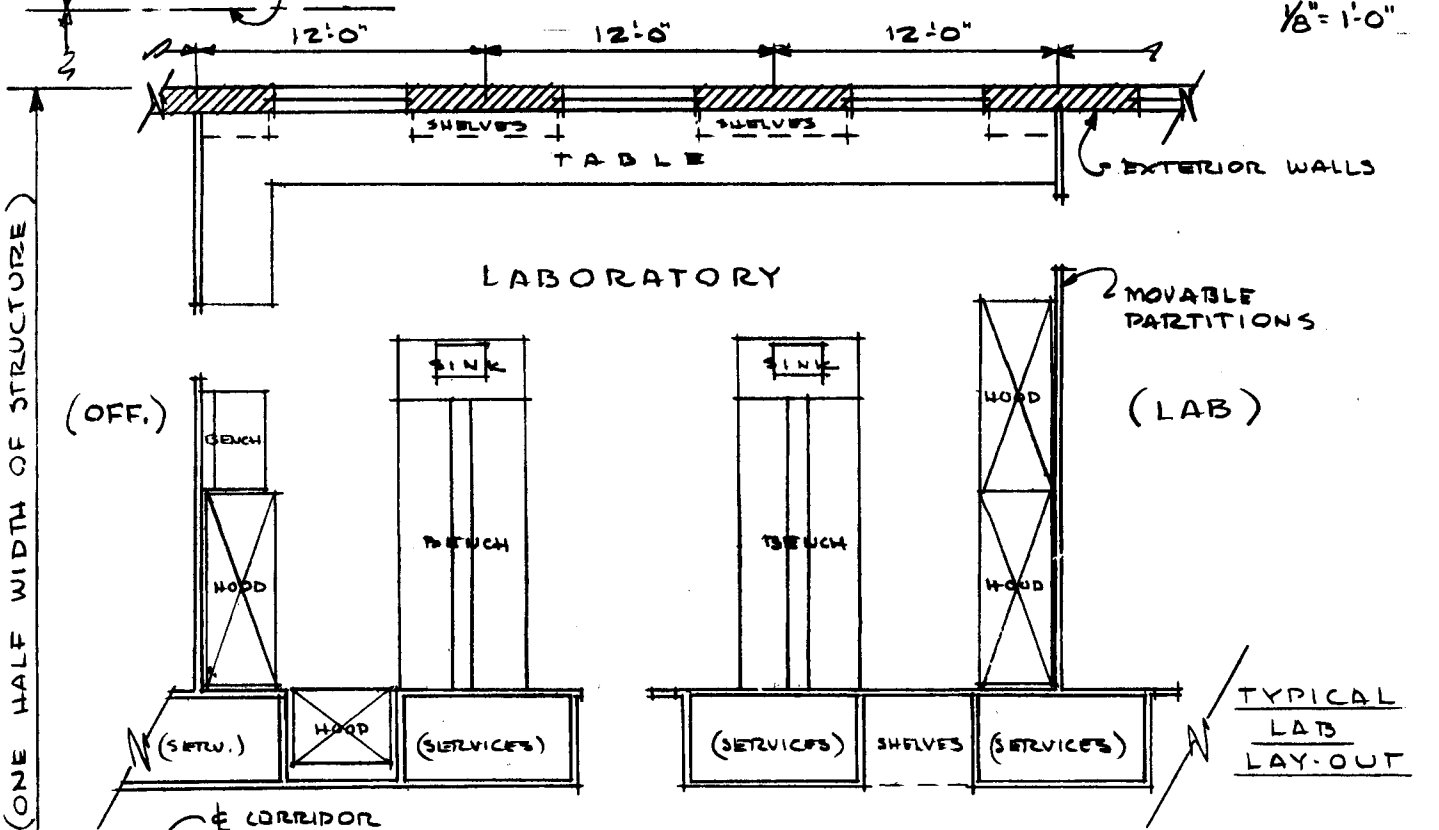

TYPICAL LAB LAY-OUT

FIGURE 3-B

1/8" = 1'-0"

TYPICAL LAB & OFFICE LAY-OUTS

It has been found at O.R.N.L. that such an occurance is extremely improbable. In general, with a source directly in line with the crack, the "beam" was so scattered by the time it came through the 2 ft. thickness, that no dangerous level of radiation was present. When one considers the usual mobility of personnel, no one would stay in position long enough to register excessive exposure on a personal meter, even were the activity $\sim$ 12-1/2 mr/hr; in moving about, they would still register $\ll$ 0.1 R/Diem, which is the accepted safe tolerance for persons. The solid concrete block, however, must be of uniform dimension and have a precisely smooth surface, being at the same time accurately square; this will further reduce possibilities of penetration. Services in these hot areas would be located on a modular basis, as would lighting, thus permitting the same flexibility as in the semi-hot, alpha, and normal level areas.

Shielding and Finishes

General shielding of area 5 is covered by the foregoing, but special shielding within hoods in areas 3 and 5, will be built up of lead bricks which frequently weigh $\sim$ 3 T for the shield in a single hood. Usually, four hoods will be in a single lab, so roughly 10-12 T of lead brick in use, and/or storage, must be kept in mind for floor loads in these areas. In area 4, the problem is of another nature: α contamination, rather than γ radiation is the problem, so mass is not the factor; here we need efficient removal of contaminated vapors. Thin, tight shielding need thus be provided there in order to control active exhaust gases until they are cleaned and exhausted.

In areas 5 and 6, or for other special needs, unique shielding methods may be called for. Charts are available that indicate "what" thickness of "which" material will be needed for "how" active a source of various radiations in order to reduce the activity to a specified level for personnel or instruments (6) (7). The Health-Physics

Division of the A.E.C. can provide this data.

No further shielding is needed for area 1 activities beyond the encompassing 2 ft. of concrete, except for such protection as may be incorporated into regular design of instruments and containers used in this area.

Considering further this matter of materials for construction, let us look more carefully at the subject of partitions. It has been pointed out that solid concrete block are more desirable than poured walls for reasons of flexibility. Let us think now of decontamination in a hot lab. Whether one uses block or poured concrete, there must be a finish of some kind, painted or sprayed on the surface of the walls. One of the best thoughts in this direction, aired at a recent meeting (8), seems to indicate ~ 2 coats of regular Prufcoat, or equal, followed by a special coating of stripper base. Then, a strippable surface may be painted or sprayed on this for the finish. This seems the logical approach; when such a surface becomes contaminated, the strippable coat may be peeled off; should activity have gone through this, the base may be removed with a dilute alkali which would not disturb the underlying Prufcoat. Even this latter may be removed, if necessary, by softening with a solvent prior to scraping off. Finally, where surfaces have been damaged prior to a major spill or explosion, and activity is permitted to contaminate the concrete itself, it can be seen that replacement of blocks will be much more facile than chipping or breaking out a poured wall.

Likewise with regard to movable metal partitions for areas 3 and 4, it is quite evident that decontaminability is far superior to that of a "permanent" wall of any sort. In cleaning, or moving a tile or plaster wall, much dust is generated which is not desirable at any time, especially near radiochemical work. Metal partitions may be sealed at the joints with narrow strips of polyethylene and covered with the peelable paint combination mentioned above for concrete; usually, just the first two layers of Prufcoat will suffice, omitting use of the stripper.

The peelable surfaces should only be needed where there is possibility of contamination from spill, spray or explosion. Elsewhere, regular Prufcoat has been found quite satisfactory for decontaminability, when less severely exposed to possible hot "baths"; the exterior surfaces of cell blocks, caves and walls in such rooms where high activity is closely confined, and well controlled, would be suitable for treating in this manner. Actually, it was found recently, that although representatives from most laboratories favored the use of peelable surfaces, few had then employed such finishes, and none had at that time exercised the peeling properties, as no serious spills had occurred on these surfaces, after application. However, all agreed that theoretically this was the most promising of possible surface treatments for walls, and further application of this treatment has since been found satisfactory at O.R.N.L.

For floor covering in areas 3 and 4 asphalt tile has an advantage over most other coverings (9). When laid on felt, or some more impervious material, with a mastic binder, there is little danger of contaminating the concrete floor. The tiles must be firm enough not to compress excessively under dolly weight, yet not so hard they will not tend to "flow" when in use, and help seal cracks between tile. After a serious spill, some contamination will probably get to the undermat. By removing sufficient tile and replacing part of the undermat by cutting out the contaminated section, and overlapping a clean piece, fresh tile may then be laid neatly into place. Linoleum presents an uncracked surface initially, but is more difficult to match neatly after cutting out a contaminated section. Most other floor coverings tried to date have been found too porous and difficult to decontaminate, and/or replace; or the cost is too high: N. B. Stainless Steel 347 and 309.

In areas 5 and 6, there is usually such heavy equipment to be moved about that the most desirable floor finish is the concrete slab itself. A good surface hardener should be used to avoid porosity as far as possible. Finishing with Prufcoat

seems the most acceptable method of painting; it stands up well under traffic and comes in various colors (10). Should a spill occur which the usual scrubbing will not decontaminate sufficiently, the concrete may be broken out 2 and 3 inches deep, and a new finish poured. One school of thought feels that no attempt should be made to paint concrete floor surfaces; the heavier the traffic, the more this feeling seems to prevail.

The structural system itself, for radiochemical design, offers no unusual problems, except for the heavy loads for which provision must be made. As has been suggested, in most cases all heavy elements can be held to the ground floor. There will, of course, be no bearing walls except possibly the exterior shell, as all space inside will be "universal", and broken up for use by adjusting the movable partitions: metal panels or solid concrete block, as called for.

One point to keep always in mind when designing radiochemical facilities is to avoid any pockets or ledges where dust may gather. Such a place might build up in activity to the point where readings on instruments would be affected, or even up past the human tolerance level. Cracks and crevices are equally as dangerous, and even harder to decontaminate without losing much time in the process.

Service Supply

Services coming in to the labs should feed from overhead, as access to them will then be more desirable for two reasons: 1) The space below grade will have hot drains and ducts; these exhaust ducts and drains will be under corridors and labs should rest on grade. 2) Above, will be sufficient plenum to introduce air supply and provide space for incoming vapor, liquid, and power supply. See Figure 4.

As previously mentioned the service risers will be located on a modular basis, every 12 ft. Referring back to Figure 3, we see there service riser spaces 3'-6" x 7'-0" enclosing the columns; each service space would not, at all times,

be in use; valved T's would be provided in the plenum to make connections as they are called for. Using the movable metal panels (or, solid concrete block with access doors) to enclose these risers, access may be had from all four sides. This is the chief advantage to be gained over placing risers on the exterior wall, where usually but one side is accessible for making connections or repairs. Between each service riser is a space ~ 4'-6" wide which will serve either as entrance to office or lab, or as closet or alcove space for the corridor or the adjacent room. In this manner, services are readily accessible, no space is wasted, complete flexibility is attained, and corridor widths may be held to a minimum, as no doors will project when open.

Horizontal service runs, from risers to equipment, should be kept accessible, yet be covered so as to prevent dust accumulation. The best location is on the

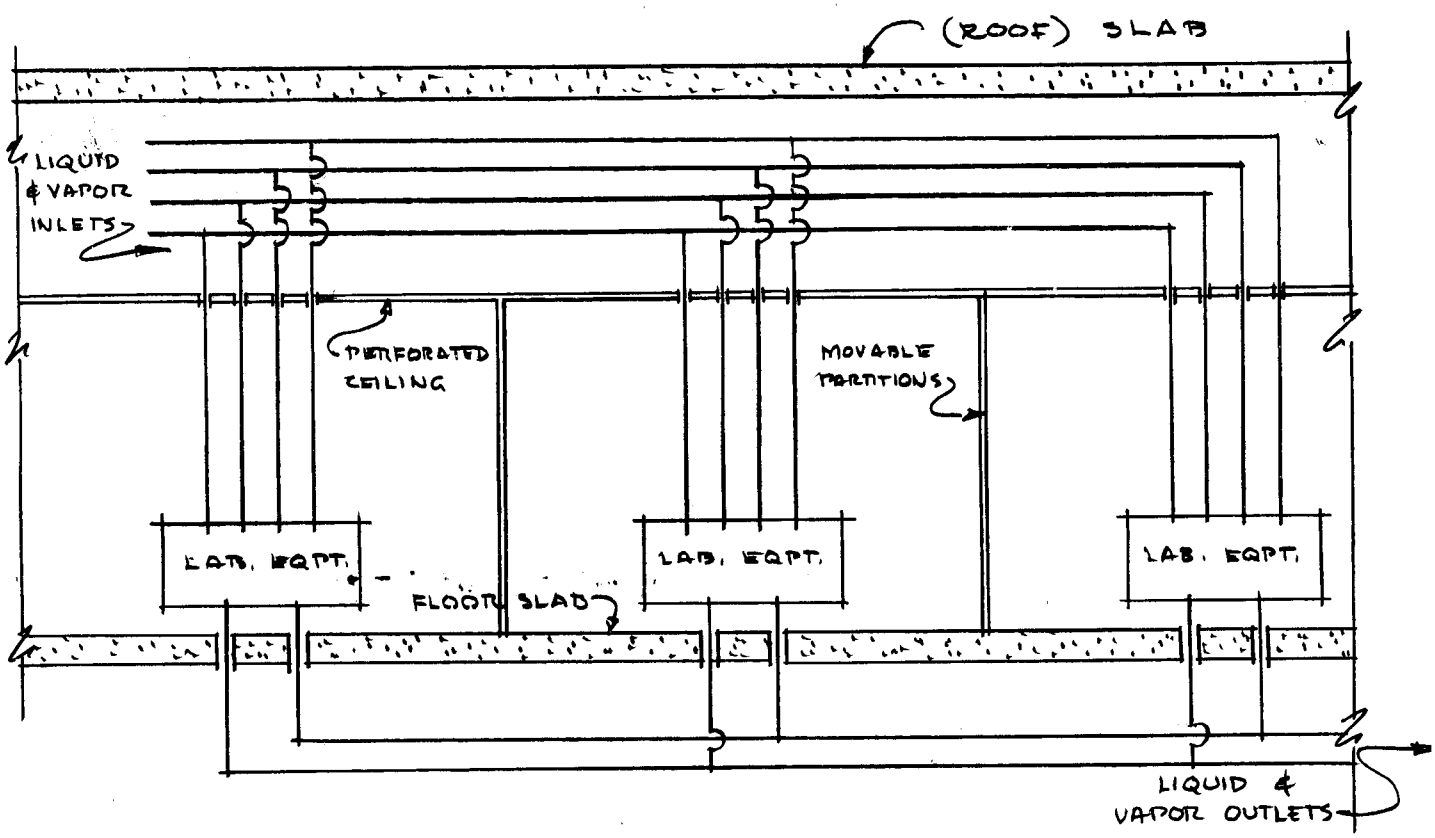

FIGURE 4

SCHEMATIC DIAGRAM INDICATING SERVICES

surface of metal or concrete block partitions, under the counter tops of lab equipment. Piped services would only be available along interior partitions, or peninsulas running from them. No piping should be run inside walls or under floors as access would then involve loss of time and excessive dust. Electric service outlets may, of course, be placed along the exterior wall, as well as wherever else needed. Flush mounted, fluorescent fixtures are the most desirable as a light source in the ceiling.

Heating and Ventilating

Air for ventilation in labs must have controlled temperature and humidity, both winter and summer. Demand by each lab for $\sim$ 4000 ft.^{3} per min. will be caused by an average of four hoods per lab, each calling for $\sim$ 1000 ft.^{3}/min. In the winter, air temperatures may be kept down by the use of radiant heating panels in the floor or ceiling and within exterior walls; this source of warmth is most desirable. For air inlet, to take care of such great air demand, aspirating ceiling diffusers are not desirable; perforated sections of the ceiling provide more satisfactory supply. Solid sections, of equal dimension (say 12" x 12"), may be used to interchange with the perforated units in order to balance properly the air inlet from above. Aspirators induce far too drafty a source of air for use in radioactive labs.

Air used in offices may be recirculated, but that from labs must be cleaned and disposed of as we shall later describe in further detail. All air should be filtered with an efficient filter prior to use in order to remove any active particles brought in by shifts of the prevailing wind. Likewise, much time and material can be saved by elimination of just plain dust and dirt; it wreaks havoc on many operations, and much equipment, in laboratories.

After being conditioned, fans will push the air through ducts to points of use.

Theoretically, the ideal circulating system would first take the air to offices, from which it would pass through corridors, on into the labs. It would then evacuate via the hoods (11). Such an ideal scheme is indicated roughly in Figure 5.

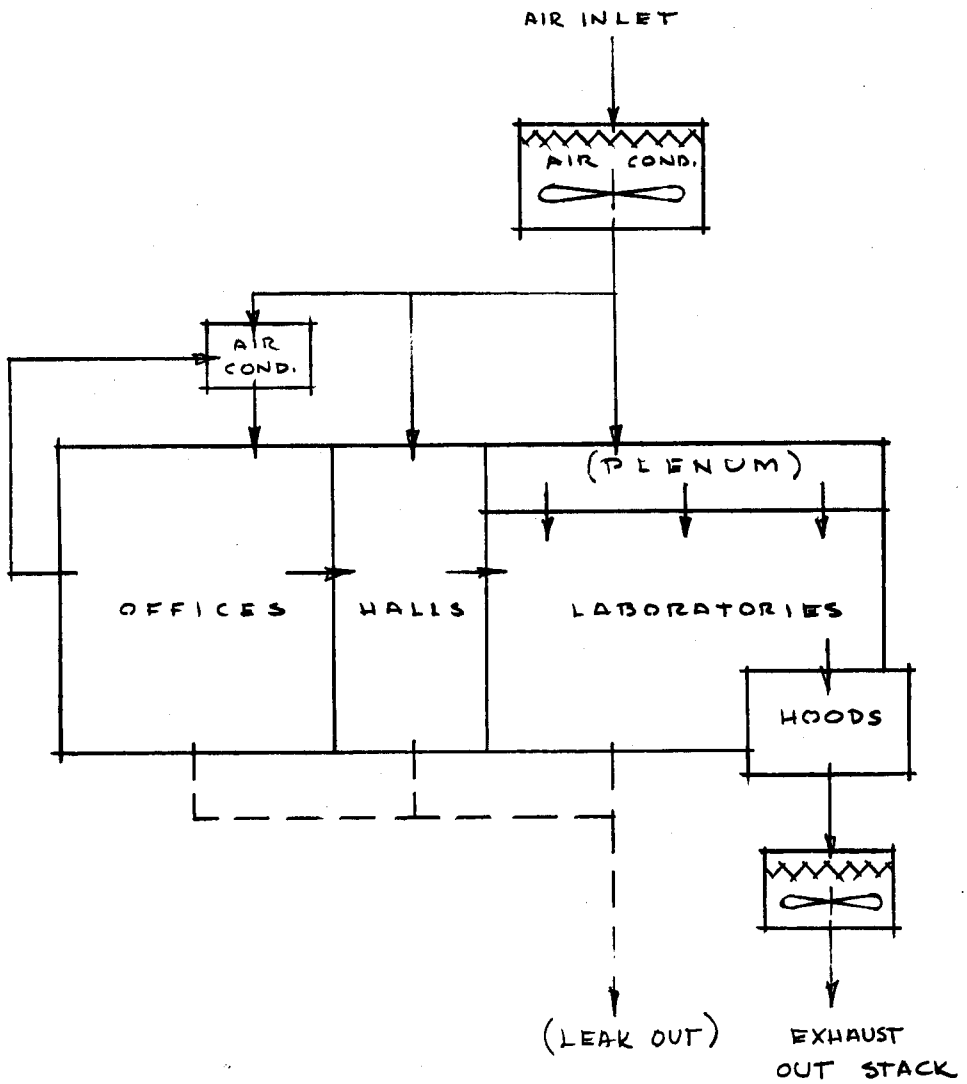

FIGURE 5

SCHEMATIC DIAGRAM of VENTILATION

It can be seen readily that offices should be operated slightly above static pressure, corridors at about the same level as outside, and labs should be slightly below atmospheric pressure. There will be then little tendency for contaminated vapors to drift back through the rest of the building. When discussing equipment, we shall touch briefly on one new factor that will assist greatly in maintaining this correct balance of pressure.

Let us now consider for a moment the possibility of radiant heating which we have but briefly mentioned. In a recent meeting, Mr. P. B. Gordon (12) outlined thoughts on the subject quite effectively: "Since most of the rooms will be built on grade with concrete floor slabs, I believe the most likely interior building surface to be used as the heating radiator would be the floor. As a rule, the cost of installing floor systems is less than that of installing ceiling systems, when all the costs are included. The ceilings, particularly in the main laboratories, might be of the perforated type to provide for the best method of introducing the supply air to the rooms. The perforated ceilings would interfere with their being used as heating panels".

He further goes on to say: "The usual arguments concerning floor versus ceiling panels run along these lines. When buildings are heated primarily for human comfort, such as offices, residences, schools, etc., I believe the ceiling to be the best location for the heated panel. It permits operating at a higher surface temperature than would be permitted for floor panels, as high as 105°F to 115°F as compared with a top limit of 85°F for floor panel operation. It provides a panel location that cannot be obscured. It locates the warmest surface in the room at the point of highest elevation, thereby effectively reducing to a minimum the percentage of heat released by convection and thus minimizing the temperature gradient from floor to ceiling. Very often the floor does not provide sufficient panel area to heat the room as compared with the ceiling because of the lower operating tem-

perature and the lower resulting heat release rate for the floor. This is usually apparent when the air ventilation rate is high and panel heating is to be the only heating source.

"However, this does not mean that floor panels cannot be used as effectively as ceiling panels. With proper design, satisfactory heating and satisfactory comfort is obtainable with floor panels. Since these laboratories are to have a separate air supply system for ventilation with the supply air heated to approximately room temperature, the remaining heat load to be offset by heat release within the rooms is proportionately not too great and well within the allowable heat realease rate permitted from floor panels."

To summarize: ceiling panels are the most effective, along with exterior wall radiant heating panels, as less linear footage of pipe is needed. Imbedded floor piping is the easiest to install, but the time lag is much greater in controlling temperature, and more linear footage is needed because of the lower temperature at which the water must circulate. Individual factors at a specific site will determine which type, or combination thereof, to adopt.

Equipment

Equipment of a permanent nature for use in labs is restricted chiefly to cell blocks and caves. Poured concrete walls ~3 ft. thick will shield operators from the activity with which they are working. The exterior should be painted with Prufcoat to facilitate cleaning; the interior will be surfaced in such manner that decontamination will be possible. Dependent on the type of operations to be carried out, is the interior surface; in some cases a completely welded lining of stainless steel #347 must be resorted to, in others, a bonded plastic lining, or even coatings applied by brush or spray may suffice. In any event, preliminary decontamination must be carried out by remote control, followed by more careful cleaning

manually, prior to personnel working for any extended period of time within the cell or cave. Numerous peep holes, periscopes, telescopes and remote control devices will need to be incorporated into the design of this permanent equipment for hot work (2) (3) (4) (5) (13). Further data can be obtained in detail from pertinent classified documents in A.E.C. files.

Semi-permanent equipment will be in use in area 5 for semi-hot work. Tables, benches, hoods, and vaults make up the bulk of such equipment in this area. The term "semi-permanent" is used to indicate that such an item is normally located in one place, but that it may be disassembled in order to be moved, serviced, decontamined, etc. Lab tables and benches are no problem; they should, however, be of metal with shelf and cabinet units below the work surface, which may be slid out on skids or rollers. This removal of the interior will permit more facile decontamination when necessary, and provide access to horizonal services previously mentioned. The services should be brought up under a raised ledge at the back of work surfaces, that they may be carried horizontally through the riser surface at the front of this raised step. It is not good practice to bring anything vertically through a horizontal plane; active materials would tend to run down quite readily through such a connection and contaminate below the work surface. Spigot outlets should not point directly toward an operator; rather should they point diagonally downward in a plane parallel with the wall, or piece of equipment. This will prevent splashing or spraying personnel in the event of a hose slipping off the spigot. A most desirable material for the work surface is stainless steel, but a peelable finish to cover any desired material, as described in connection with movable partitions would probably suffice where abrasive action is not predomenant. Stainless steel trays should be used on which to work, thus simplifying decontamination. Further, on any surface, it is considered good practice by some to use an absorbent blotting paper to catch the major portion of any radioactive spill; it may then be

readily disposed of. Hoods in semi-hot labs are not quite so readily made "semi"-permanent as are benches and tables. However, sections can be made demountable to assist in decontamination procedures. The base should be massive in order to protect from γ radiation going downward, toward the operator, and to provide sufficient support for some 3 tons of lead bricks which may be used for shielding activity within the hood. The work surface should slope back toward a drain ditch in the rear of the hood to prevent spread of contamination when cleaning this surface. Sliding doors must be provided to close the hood when no operator is manipulating therein, and all services should be operated from outside the hood door; spigots again will point away from the operator. Mirrors will be needed to see what takes place behind the lead barriers put up for shielding within the hood. Again, stainless steel #309 or #347 is best for the work surface as well as the vent baffle inside the hood and all of the superstructure. It would be desirable to have removable stainless steel work surface and baffle, the better to assist in decontamination. As for exhaust from the hood, we shall go more into a similar system when discussing the hoods for low level labs. Hood lights must be so located that glare is minimized and access is available from outside the hood in order to service the electrical equipment when necessary. A concrete, or lead storage cave will need to be located in each lab, in which to keep active samples ready for use in the hoods.

Considering semi-permanent equipment for use in areas 3 and 4, similar features apply to lab tables and benches as already discussed for area 5. Hoods for area 3, however, can be more movable, as well as Dry Boxes for area 4. These hoods for semi-hot work may be built in two sections. The upper part would include the hood working surface and all superstructure surrounding same. This complete assembly could be removed for servicing and complete decontamination by merely disconnecting services prior to dislocation with a hoist. The lower part would consist of a secondary lab table work surface, under which would be located an exhaust vapor

filter, readily replaceable. The complete assembly would have a constant demand, whether or not hood doors are open, of ~ 1000 ft.^{3} air/min. A constant velocity of air through hood doors, in any position would be ~130 lin.ft/min. These conditions will be maintained in the following manner. Hood doors will slide horizontally in opening, engaging gears which will activate by-pass shutters; this will permit the 1000 ft.^{3} of air demand to be satisfied by a vent by-pass when hood doors close, and vice versa. At all times, the call for air intake will be so proportioned that demand through the hood doors will remain constant at 130 lin.ft/min. In this way the operator is satisfied, in that sufficient ventilation is provided for his work without excessive drafts being developed by slightly opened hood doors, and the problem of air pressure balance between labs and corridors is taken care of in that there is always a constant demand for air as initially provided in design. Services will come in at each end of the hood, fed through the vertical end panel; spigot outlets will point backward and downward at a 45° angle. Further details may be obtained from reports by the writer and T. W. Hungerford (14)*. (With conventionally vented hoods, as used in the past, two adjacent laboratories, each with say four hoods, could build up considerable pressure differential, should all hood doors be closed in one room, and all open in the other.) In addition, when a by-pass is located near the floor, its action will serve to reduce the activity background level in the room; hence, the adoption of a down, rather than up, draft premise. This point was brought out in a recent meeting by a representative from another site; data were collected which give support to the point. A filter located at the immediate point of vapor exit from the hood reduces the rapidity of of contamination build-up within the exhaust duct system and will save expense in later maintenance. These filters of course are readily accessible for needed

*Further consideration has been given another solution from another source, since this was written (17).

replacement.

Dry boxes*, for α work, are more desirable than hoods, from the engineer's viewpoint, in that the ventilation needed is less by a factor of 100; only 10 ft.^{3} air/min. need pass out through the exhaust vent. For the most part, operators now realize that all alpha operations should be carried on in dry boxes, but there is still feeling from some that it is "more convenient" to use a hood in spite of the fact that less safety is provided against contamination; and they disregard the fact that more cost is involved because of the far greater demand for air presented by hoods. Here again, a replaceable filter should be provided, at the exhaust connection with the dry box, in order to eliminate the major part of contamination in the duct system; naturally no by-pass is needed, as the 10 ft.^{3}/min. will be a constant demand. Dry boxes can be very light weight, but <u>must</u> have <u>no</u> leaks in the exhaust system.

There will be many items of movable equipment used in all areas: counting devices, dollies, trucks and smaller pieces of lab equipment. The only factor which will affect design appreciably from this angle is the use of heavy shielded dollies, weighing $\sim$ 3 T, which were previously mentioned.

Equipment in general will need to be thought of in modular terms. In order to derive the utmost benefit from the universal space when subdivided into lab and office areas, the dimensions of equipment must be correlated with the spaces into which it will be installed. With this thought in mind, it is of little import "which came first": the building module or the equipment module; they should, however, be interrelated. Likewise of prime import, is to standardize the design of equipment in order to maximize interchangeability of units of similar function when repairs are needed, and to permit more freedom of substitution when changes of program call for revised lab layout. Many standard items now on the market will serve admirably, but a large proportion of the equipment needed in Radiochemican Laboratories will have

*Dry Boxes: for further details, contact Nelson Garden, at Univ. of Cal., who has done considerable development in this field.

to be developed from scratch. The Architect will continue to function here in his normal capacity as coordinator, interpreter, and mediator between the client, the engineer and the constructor in order to effect the most desirable equipment design.

Waste

In radiochemical laboratories there will be at least three types of liquid waste, of which disposal must be made: Sanitary, Process, and "Hot". The sanitary system will not differ from that required for the normal disposal of waste liquids. There will be outlets of this type in all areas for non-chemical, inactive needs.

The process sewer will be for the usual chemical waste. Nothing active shall be disposed of via this route (microcurie quantities would not, however, be of any danger, if drained into this but occasionally). Liquids in this system need only to be neutralized, prior to disposal as ordinary sanitary waste.

Hot drains (5) will come from cell blocks, hot hoods and sinks, storage lockers and caves, and any place where it is likely that contamination will be at the millicurie level, or higher. These drains should be shielded within the building, and terminate in underground stainless steel tanks just outside. Here, the acid wastes will be neutralized before being checked for type of activity, and sent to large tanks or vats for permanent storage or disposal.[18],[19] Maintenance of this drain system is a potential problem and any leak therein is bound to result in highly radioactive contamination. Therefore, it should either be completely maintenance free (there is a goal, at which to shoot!), or accessible under such conditions that the probable resulting contamination will not be serious. At no point where corrosion of the line is likely to be a problem should these hot drains be buried in walls or slabs. It is for reason of this needed free access to such drains that

all services should be fed from above, as previously indicated; clean supply lines should not be crowded into an area where hot exhaust drains and ducts are located.

All labs located in areas 3, 4, 5 and 6 need connections with both process and "hot" drains. As to how many outlets, and whether they are to be located within hoods, or without, must be determined by the client who is to operate the facilities (13). "Normally", process lines will come from sinks outside of hoods or cell blocks, and hot drains will be from within hoods, cell blocks, caves, decontamination rooms, etc. In either event, stainless steel, or lead lined, sinks will dump through a Duriron trap into the respective systems. In less pretentious facilities, which have no hot drain (see further, concerning waste disposal), active material may be collected in a sink (with process drain connection), and aspirated out into a shipping container in which to be kept until transportation to a point of disposal is effected. Activity of the solution used for cleaning the sink should be sufficiently low to further dilute and flush down the process line, provided the batches are $< \mu C$ level of activity, and not dumped frequently.

Exhaust ducts eminating from labs and hoods, wherein β and γ activity are present, must be sufficiently shielded to protect personnel, especially with regard to maintenance workers, who will be in close proximity when making repairs, decontaminating, or altering the installations. The problem of shielding will be nowhere near as acute if filters are located in the outlet at each hood, as previously indicated. Ductwork must be finished on the inside with no joints or rough spots wherein active material would tend to gather and build up "hot" pockets. Two schools of thought suggest quite opposite approaches to hot duct problem. One: Weld heavy stainless steel sections together in order to provide a "permanent" solution The other: Use light, inexpensive materials which may be replaced readily. The writer leans somewhat towards a median approach. Having provided filters which reduce

activity in the duct by a factor of 10, the rapidity with which radioactive particles would tend to build up hot pockets would be similarly reduced. This would permit the consideration of periodic cleanings to decontaminate, when a critical level would be appraoched. Removable panels, and/or replaceable sections, would allow the use of such a material as stainless steel, welded smoothly throughout most of the inside, and yet grant needed access for cleaning and maintenance.

In any event, ducts would be led to a common point of further filteration, washing or electrostatic precipitation of dust particles, after which, the vapors would be forced briskly up a high stack for exit and dispersion. For economic, as well as aethsetic reasons, it is desirable to manifold all exhaust ducts possible in order to have but one stack; the minimum number of stacks or vents should be an objective, always keeping in mind the prevailing wind direction when locating, in order to minimize reintroduction of active particles into any work areas. Current studies are being directed toward an almost perfect cleansing of waste gases prior to their being eliminated through the stack.

Waste disposal is a most complicated problem; far too much so for us to consider it even briefly in a paper of this nature. Representatives of the A.E.C. and many of its contractors recently had a meeting on this subject, which is covered nicely in a report (16). Few sites need give much thought to the problem of waste disposal. A University, for example, wishing to set up radioactive chemical facilities, need only make sure that all active liquids or solids are deposited in shielded jars or containers of an approved type. They may then be shipped, with A.E.C. approval, to one of the major sites where waste disposal facilities will be able to accommode such contaminated wastes. The smallest of labs may not even need a hot drain system; containers could be placed in the lab itself and active liquids merely drained directly into them. Other facilities, somewhat greater in extent, might carry the hot drains out to storage tanks and periodically ship from this point.

Conclusion

It can be seen from the foregoing that each of the levels of activity requires a differing set of postulates with which to deal when considering design needs. Yet our aim is to attain the goal of universal space, and standard items of equipment, while still furnishing the space subdivisions "when", "where" and "how" called for by the persons planning to use them. This flexibility is of prime importance in the new field of Radiochemistry; developments which directly influence space needs, change requirements constantly and with great rapidity. Movable partitions and equipment, which satisfy to best advantage all requirements of personnel safety, provide the only solution to the needs of flexibility; laboratory operators' time is saved because of more rapid changeovers, less time needed to decontaminate, and more speed of maintenance crews in their work. In addition, although initial costs may be no lower than a "permanent" type of installation, maintenance costs are considerably reduced for all future years of operation; alterations cannot be considered as more than just a part of normal overhead.

By the above means, more desirable facilities can be provided at less cost. Standardization of building and equipment design features for use in this field should be always in mind; this will reduce further the initial and maintenance expenditures. Coordiantion of all such design developments by a central A.E.C. engineering staff will assist greatly in reducing the time needed to attain such standardized design.

BIBLIOGRAPHY

(1) A. D. Mackintosh, AECD 2178 (1948)

(2) P. C. Tompkins, H. A. Levy AECD 1886 (1948), Ind. & Eng. Chem., 41, 228, (1949)

(3) H. A. Levy, MDDC 262 (1946)

(4) W. H. Ray, "The Design of Radiochemical Laboratories" (1948)

(5) P. C. Tompkins, AECD 1887 (1948), Ind. & Eng. Chem., 41, 239, (1949)

(6) F. Western, "The Negative Exponential" (lecture notes), page 5, (1949)

(7) Project Handbook, CL-697, Vol. II, Chapter 5

(8) J. P. FitzPatrick, Chapter VI, ANL-HLH-13 (1948)

(9) E. R. Jette & R. B. Dittmar, Chapter IV, ANL-HLH-13 (1948)

(10) C. E. Stevenson, Chapter V, ANL-HLH-13 (1948)

(11) J. P. FitzPatrick, Chapter IV, ANL-HLH-10 (1948)

(12) P. B. Gordon, Chapter V, ANL-HLH-10 (1948)

(13) J. Lilienthal, Chapter IX, ANL-HLH-12 (1948)

(14)* A. D. Mackintosh, T. W. Hungerford, "A Standard Hood for Radioactive Work" (1948) and "Data Observed in Study of 'Standard' Hood Mock-Up" (1949)

(15) H. A. Levy, AECD 1858 (1948), Ind. & Eng. Chem., 41, 248, (1949)

(16) A.N.L. Conference Minutes, ANL-HLH-14 (1948)

(17)* C. E. Winters, Memo to Mackintosh and Hungerford (1949)

(18) F. Western, Nucleonics, Vol. 3, No. 2, 43, (1948)

(19) "Waste Disposal Symposeum", Nucleonics, Vol. 4, No. 3, 9, (1949)

*14 and 17 are available, bound together as one paper.