UNCLASSIFIED

ORNL-379

CHEMISTRY-GENERAL

MARTIN MARIETTA ENERGY SYSTEMS LIBRARIES

3 4456 0360438 4

CHEMISTRY DIVISION

SYNTHESIS OF FORMALDEHYDE-C^{14}

A. R. JONES

W. J. SKRABA

OAK RIDGE NATIONAL LABORATORY

CENTRAL RESEARCH LIBRARY

CIRCULATION SECTION

4500N ROOM 175

LIBRARY LOAN COPY

DO NOT TRANSFER TO ANOTHER PERSON

If you wish someone else to see this report, send in name with report and the library will arrange a loan.

UCN-7969 (3 9-77)

OAK RIDGE NATIONAL LABORATORY

OPERATED BY

CARBIDE AND CARBON CHEMICALS CORPORATION

FOR THE

ATOMIC ENERGY COMMISSION

OAK RIDGE, TENNESSEE

UNCLASSIFIED

UNCLASSIFIED

Report Number: ORNL-379

This document consists of 14 pages.

Copy 7 of 135 Series A

ISSUED:

Contract No. W-7405, eng 26

CHEMISTRY DIVISION

SYNTHESIS OF FORMALDEHYDE-C^{14}

A. R. Jones and W. J. Skraba

DATE ISSUED

NOV 14 1949

O A K R I D G E N A T I O N A L L A B O R A T O R Y

Operated By
Carbide and Carbon Chemicals Corporation
For The
Atomic Energy Commission
Post Office Box P
Oak Ridge, Tennessee

UNCLASSIFIED

MARTIN MARIETTA ENERGY SYSTEMS LIBRARIES

3 4456 0360438 4

OAK RIDGE NATIONAL LABORATORY INTERNAL DISTRIBUTION:

1. G. T. Felbeck (C&CCC)
2. 706-A Library
3. 706-A Library
4. 706-B Library
5. Biology Library
6. Health Physics Library
7. Training School Library
8. Training School Library
9. Central Files
10. Central Files
11. Central Files
12. Central Files
13. J. A. Swartout
14. J. H. Gillette
15. F. L. Steahly
16. A. Hollaender
17. J. H. Frye, Jr.
18. E. J. Murphy
19. C. N. Rucker
20. W. D. Lavers
21. A. M. Weinberg
22. J. A. Lane
23. R. N. Lyon
24. F. C. VonderLage
25. A. R. Jones
26. W. J. Skraba

OAK RIDGE NATIONAL LABORATORY EXTERNAL DISTRIBUTION:

27-34. Argonne National Laboratory
35. Armed Forces Special Weapons Project
36-37. Atomic Energy Commission, Washington
38. Battelle Memorial Institute
39-46. Brookhaven National Laboratory
47. Bureau of Medicine and Surgery
48. Bureau of Ships
49-52. Carbide and Carbon Chemicals Corporation (K-25)
53-56. Carbide and Carbon Chemicals Corporation (Y-12)
57. Chicago Operations Office
58. Cleveland Area Office
59. Columbia University (Dunning)
60. Columbia University (Failla)
61. Dow Chemical Company
62-67. General Electric Company, Richland
68. Hanford Operations Office
69. Idaho Operations Office
70-71. Iowa State College
72. Kansas City
73-76. Knolls Atomic Power Laboratory
77-79. Los Alamos
80. Mallinckrodt Chemical Works
81. Massachusetts Institute of Technology (Gaudin)
82. Massachusetts Institute of Technology (Kaufmann)
83-85. Mound Laboratory
86-87. National Advisory Committee for Aeronautics
88-89. National Bureau of Standards
90-91. Naval Radiological Defense Laboratory
92-93. NEPA Project
94. New Brunswick Laboratory
95-99. New York Operations Office
100. North American Aviation, Inc.
101. Patent Advisor, Washington
102. Rand Corporation
103. Sandia Base
104. Sylvania Electric Products, Inc.
105. U. S. Public Health Service
106. UCLA Medical Research Laboratory (Warren)
107-111. University of California Radiation Laboratory
112-113. University of Rochester
114. University of Washington
115-116. Western Reserve University (Friedell)
117-120. Westinghouse
121-135. Technical Information Branch, ORE

ABSTRACT

Methanol-C^{14} has been converted to formaldehyde-C^{14} in yields of about 60%.

Scheme of Preparation

Acetylation: $C^{14}H_3OH + CH_3COCl \longrightarrow CH_3COOC^{14}H_3 + HCl$

Chlorination: $CH_3COOC^{14}H_3 + Cl_2 \longrightarrow CH_3COOC^{14}H_2Cl + HCl$

Hydrolysis: $CH_3COOC^{14}H_2Cl + H_2O \longrightarrow C^{14}H_2O + CH_3COOH + HCl$

Methanol-C^{14} was acetylated with acetyl chloride. The methyl-C^{14} acetate was monochlorinated and the crude product hydrolyzed with water. The hydrolysis mixture was diluted with carrier formalin solution, neutralized and distilled to dryness, producing a neutral aqueous solution of formaldehyde-C^{14}.

SYNTHESIS OF FORMALDEHYDE-C^{14}

A. R. Jones and W. J. Skraba

INTRODUCTION

The production of formaldehyde-C^{14} by air oxidation of methanol-C^{14}(1) and by pyrolytic decomposition of triphenylmethyl carbinol-C^{14}(2)

(1) M. Calvin, et. al., Isotopic Carbon, John Wiley & Sons, New York, 1949, p. 166.
(2) Private communication, C. Heidelberger to W. W. Miller and T. D. Price, Nucleonics, 1, No. 3, 21 (1947).

has been reported to be unsatisfactory.

A simple procedure for the conversion of methanol-C^{14} to formaldehyde-C^{14} has now been developed. The present method is an adaptation of the formaldehyde synthesis of Henry(3) and of Michael(4) to vacuum line

(3) L. Henry, Ber., 6, 739 (1873).
(4) A. Michael, Am. Chem. J. 1, 418 (1879).

technique.

DISCUSSION

Acetylation and Chlorination

Methyl-C^{14} acetate was prepared by allowing a frozen equimolar mixture of methanol-C^{14}(5) and acetyl chloride to warm to room temperature

(5) R. Nystrom, W. Yanko, and W. G. Brown, J. Am. Chem. Soc., 70, 441 (1948).

in an evacuated bulb. It was found that the overall yield of formaldehyde from methanol was not improved when the acetylation was carried out at

atmospheric pressure under reflux. The presence of a mole of pyridine to react with the hydrogen chloride produced during the esterification lowered the overall yield considerably.

The monochlorination of methyl acetate to produce chloromethyl acetate, indicated by Henry to be favored by moderate temperatures, was performed in the present case by allowing a frozen mixture of chlorine and methyl-C^{14} acetate to warm to room temperature in an evacuated bulb.

The overall yields of formaldehyde were found to be better when a slightly less than molar proportion of chlorine was used. The explanation of the less than theoretical yield of formaldehyde on hydrolysis of the chlorination product lies probably in the possibility of two additional reactions in the chlorination step: (1) further chlorination of the alcoholic methyl group to give products not yielding formaldehyde on hydrolysis, and (2) chlorination of the methyl group of the acid residue. That the hydrolysis step does not contribute to the reduction of the yield is proved by the fact that the hydrolysis of carefully purified chloromethyl acetate prepared by the method of Descude[6] gave a quantitative yield of formaldehyde. Chlori-

(6) Descude, Compt. rend., 132, 1568 (1901).

nation of methyl acetate with two moles of chlorine gave a 25% yield of formaldehyde. If chlorination in the acid radical were the only competing reaction, one would expect the yield to be improved under these conditions; if only polychlorination of the methanol radical were involved, then the yield might be expected to be lower than 25%. When chlorination was carried

out in the presence of strong artificial light, or when the nipple of the bulb was immersed in a 60°C. bath, or alternatively, in a -20°C. bath, the yield of formaldehyde from methyl acetate was decreased.

To avoid the competing chlorination of the acid methyl group, other methyl esters were chlorinated in the hope that a better yield of formaldehyde might be secured:

> Methyl chloroacetate gave approximately the same yield as methyl acetate.
>
> Dimethyl oxalate chlorinated readily, but the yield of formaldehyde was low.
>
> Methyl trichloroacetate chlorinated rapidly but the hydrolysis was unsatisfactory.
>
> Methyl tosylate and methyl benzoate were difficult to chlorinate.
>
> Methyl chlorocarbonate chlorinated easily but a poor yield of formaldehyde was obtained upon hydrolysis.

Methyl acetate did not react with bromine under the conditions used for chlorination. A mixture of methyl bromoacetate and bromine was decolorized after standing two days at room temperature, but hydrolysis of the product yielded only a small amount of formaldehyde.

Hydrolysis and Distillation

The hydrolysis of the crude chlorination product was accomplished by heating it with excess water in a sealed evacuated bulb. By this method, pure chloromethyl acetate yielded formaldehyde quantitatively.

In all preliminary investigations, the hydrolysis solution was analyzed for formaldehyde directly by precipitation of the dimedon derivative of formaldehyde, identified by melting point and mixed melting point. For the hot runs, however, the hydrolysis solution before analysis was diluted

with carrier formalin, neutralized with potassium hydroxide pellets, and made just acid to phenolphthalein with acetic acid; then distilled at atmospheric pressure. It was necessary to dilute with inert formalin solution, not only to provide a carrier for the transfers, but to insure the stability of the product. The acids obtained on hydrolysis of the chlorination product: hydrochloric, acetic, and probably formic and chloroacetic, were removed by neutralization of the solution before distillation.

Paraformaldehyde was prepared by treating chloromethyl acetate with sufficient commercial formalin solution to furnish the water for hydrolysis. This procedure produced a paste which left a residue of dry polymeric formaldehyde when the volatile material was removed under high vacuum.

In the preliminary experiments, the assay for formaldehyde was performed by diluting the solution and treating an aliquot with dimedon reagent which quantitatively precipitated the formaldehyde derivative in 24 hours. For the assay of radioactive formaldehyde, a 10 microliter aliquot of the neutral distillate was diluted with inert formalin solution and portions were treated with dimedon reagent. The derivative was isolated after twenty-four hours and samples were oxidized to radioactive carbon dioxide, the activity of which was determined by means of a vibrating reed electrometer[7]. Both the wet combustion[8] and dry combustion over copper

(7) H. Palevsky, R. K. Swank, and R. Grenchik, Rev. Sci. Inst., 18, 298 (1947).
(8) O. K. Neville, J. Am. Chem. Soc. 70, 3499 (1948).

oxide gave consistent yields.

Investigation of Solid Derivatives

In attempts to prepare an isolable solid derivative from which formaldehyde would be easily recoverable, formaldehyde oxime, hexamethylenetetramine and the methylol derivatives of saccharin and phthalimide were investigated. None gave sufficiently high yields of derivative from reaction with aqueous formaldehyde.

Direct oxidation of dilute methanol to formaldehyde with potassium persulfate(9) was attempted as a preparative method, but was not found

(9) P. D. Bartlett and J. D. Cotman, J. Am. Chem. Soc., 71, 1419 (1949).

feasible because of the difficulty of recovering formaldehyde from the dilute aqueous solution necessary for reaction to take place.

With regard to the apparatus, it may be mentioned that several inches of sulfuric acid suffice to protect the mercury in the manometer from attack by chlorine. Dow-Corning Silicone vacuum grease was used to lubricate all stopcocks and joints. After a number of runs, the reaction bulb contained a white non-volatile material and the over-all yields of formaldehyde from methanol decreased. Replacement of the bulb corrected the situation.

EXPERIMENTAL

Scheme of Preparation

Acetylation: $C^{14}H_3OH + CH_3COCl \longrightarrow C^{14}H_3OOCCH_3 + HCl$

Chlorination: $C^{14}H_3OOCCH_3 + Cl_2 \longrightarrow ClC^{14}H_2OOCCH_3 + HCl$

Hydrolysis: $ClC^{14}H_2OOCCH_3 + H_2O \longrightarrow C^{14}H_2O + HCl + CH_3COOH$

The vacuum manifold is shown in Figure 1.

NOT CLASSIFIED
DWG. 7621

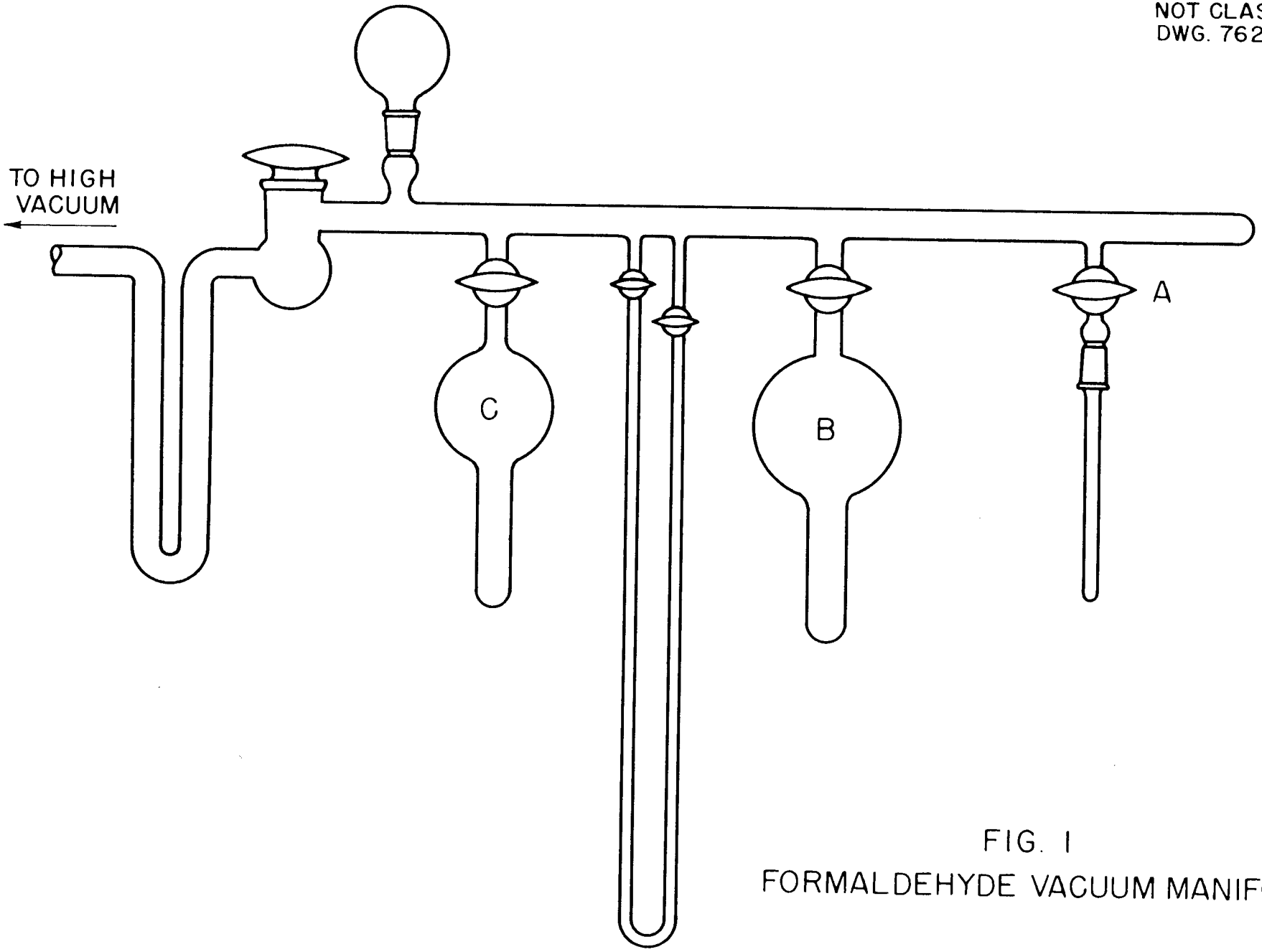

FIG. 1
FORMALDEHYDE VACUUM MANIFOLD

Acetylation

Methanol-C^{14}, 332 mg., 10.4 mmoles (2.06 microcuries/mmole) and acetyl chloride, 816 mg., 10.4 mmoles, were consecutively distilled from A into the liquid nitrogen cooled nipple of the one-liter bulb, B. The reaction vessel was isolated from the manifold and the frozen reagents were warmed to 40-50° for forty-five minutes with a heat lamp. The contents of B were frozen into the nipple by immersing the latter in liquid nitrogen. To remove a part of the hydrogen chloride, the nipple was warmed to -80° (Dry-Ice and trichloroethylene) and the bulb was evacuated to 10^{-4} mm.

Chlorination

The Dry-Ice trichloroethylene bath was replaced by liquid nitrogen and 1400 ml. (27°C. and 12.9 cm of mercury), 9.6 mmoles, of commercial chlorine gas, from which impurities non-condensable with liquid nitrogen had been removed, was distilled from C into the reaction bulb. The pressure of chlorine was determined with a manometer in which the mercury was protected by a layer of sulfuric acid. The bulb was isolated from the manifold and the contents were allowed to warm to room temperature in subdued light. Loss of the chlorine color began while the reactants were still quite cold. The contents of the bulb were recondensed and allowed to return to room temperature several times to insure thorough mixing. When all trace of chlorine color had disappeared, one to two hours, part of the hydrogen chloride was removed as described above.

Hydrolysis

A 25 ml. hydrolysis bulb (Figure 2) containing 3 ml., of distilled water and equipped with a spring-loaded 4 mm. straight-bore stopcock

NOT CLASSIFIED
DWG. 7622

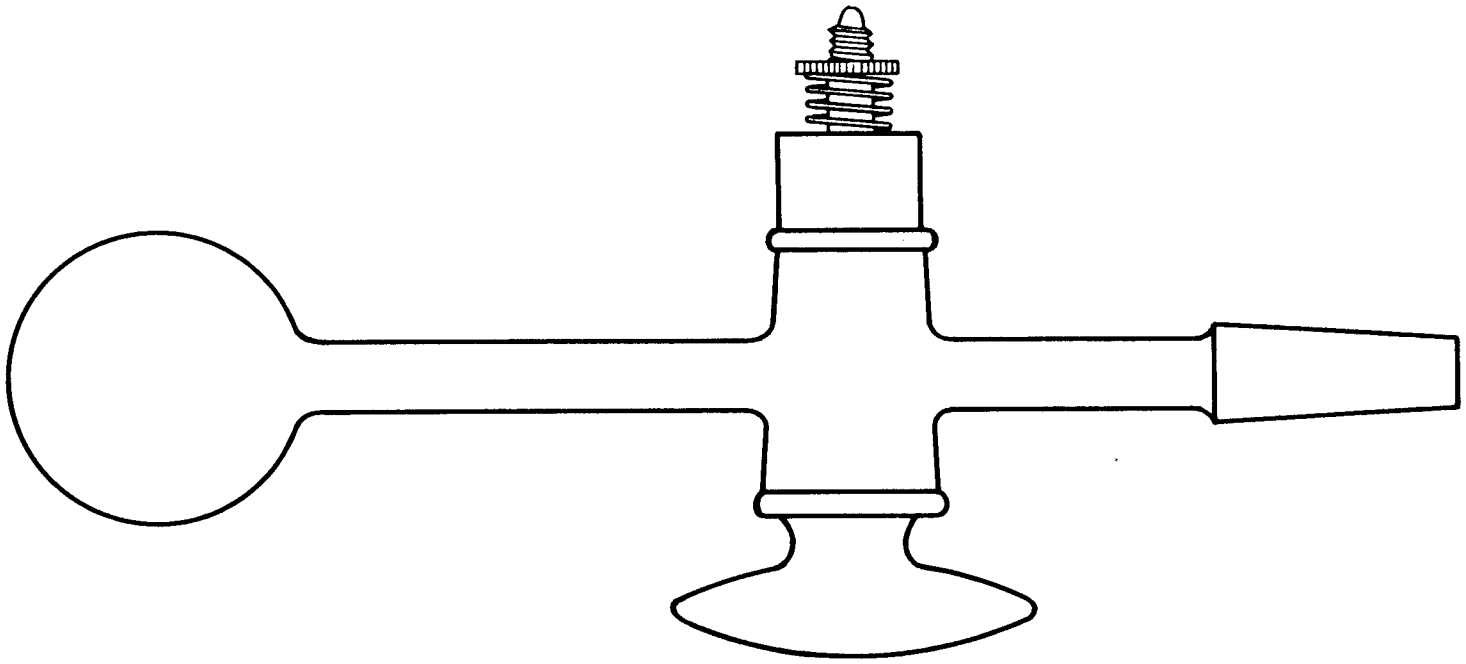

FIG. 2
HYDROLYSIS FLASK

was attached at A, immersed in liquid nitrogen, and evacuated. After the crude chloromethyl-C^{14} acetate was transferred to the hydrolysis bulb, the stopcock was closed and the vessel was removed from the vacuum line, and immersed to the stopcock in boiling water for thirty minutes to allow hydrolysis to take place*. The flask was cooled to room temperature and

*There has been no failure of either bulb or stopcock observed in more than thirty hydrolyses.

with the aid of a file mark on the stem, the stopcock was removed and the contents of the bulb were transferred to a small pear-shaped flask. Five milliliters of 37% commercial formalin solution containing approximately 60 mmoles of formaldehyde was used to rinse the hydrolysis bulb and complete the transfer. The mixture was made slightly basic with potassium hydroxide pellets, and then barely acidified to phenolphthalein with acetic acid. A neutral formalin solution which weighed 9.027 g. was obtained by distillation to dryness at atmospheric pressure (Figure 3).

Analysis

A 75 microliter aliquot (78 mg.) of this solution was added to a solution of 0.40 g. of dimedon reagent in 100 ml. of water. After standing for twenty-four hours at room temperature, the dimedon derivative of formaldehyde was filtered off, washed with water and dried. In this way, 159 mg. of dimedon-formaldehyde was obtained.

The dry combustion of a 22.6 mg. sample of the derivative gave 181 ml. of carbon dioxide (28.5° and 13.7 cm. pressure) which produced an ion current of 6.80×10^{-14} amperes when the radioactivity assay was made

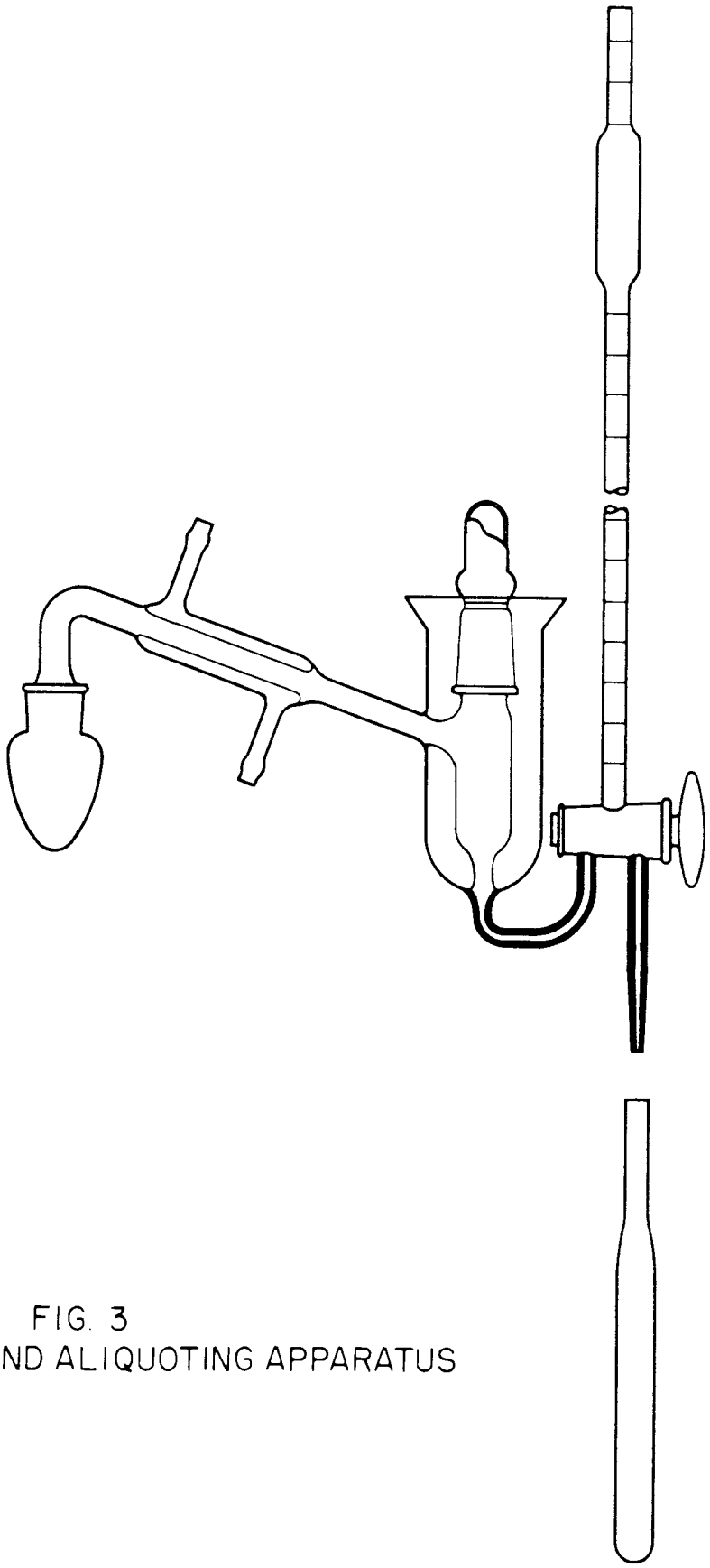

FIG. 3
DISTILLATION AND ALIQUOTING APPARATUS

with a dynamic condenser electrometer. The factors: 1.17×10^{-16} amperes per disintegration per second and 3.7×10^{4} disintegrations per second per microcurie were used to convert the ion current to microcuries. The total activity of the formaldehyde in the neutral distillate was calculated to be 12.9 microcuries; a radiochemical yield of 60.5%.

To show that no isotopic dilution had occurred, a run was made starting with 258 mgs. of methanol-C^{14} (sp. act. 12.00 microcuries per millimole). A 0.295 g. aliquot of the acid hydrolysis solution (3.755 g. total weight) gave 100 mg. of formaldehyde-dimedon derivative (sp. act. 12.18 microcuries per millimole). From these figures both the radiochemical yield (54.8%) and the chemical yield (54.1) can be calculated.

For the analysis of production runs, a small aliquot of the neutral distillate was diluted with carrier formaldehyde solution and aliquots of this mixture were analyzed radiochemically by the method given above.

By this procedure, 30 millicuries of formaldehyde-C^{14} with a specific activity of 250 microcuries/mmole has been prepared. This material was aliquoted with the apparatus shown in Figure 3 into ampoules for distribution.