CENTRAL RESEARCH LIBRARY
DOCUMENT COLLECTION

ORNL-472

REACTOR

74

[redacted]

DECLASSIFIED
LABORATORY RECORDS

CLASSIFICATION CHANGED TO:
BY AUTHORITY OF: T 10 - 1112
BY: D Johnstone 10/22/56

MARTIN MARIETTA ENERGY SYSTEMS LIBRARIES
3 4456 0360454 3

TECHNICAL DIVISION

MTR STRAIN MEASUREMENTS

H. C. SAVAGE

OAK RIDGE NATIONAL LABORATORY
CENTRAL RESEARCH LIBRARY
CIRCULATION SECTION
4500N ROOM 175
LIBRARY LOAN COPY
DO NOT TRANSFER TO ANOTHER PERSON
If you wish someone else to see this report, send in name with report and the library will arrange a loan.
UCN-7969 (3 9-77)

OAK RIDGE NATIONAL LABORATORY
OPERATED BY
CARBIDE AND CARBON CHEMICALS CORPORATION
FOR THE
ATOMIC ENERGY COMMISSION

OAK RIDGE, TENNESSEE

[redacted]

[redacted]

ORNL-472

This document consists of 21 pages. Copy 7 of 95 copies. Series A

Contract No. W-7405, eng 26

TECHNICAL DIVISION
Engineering Development Section

MTR STRAIN MEASUREMENTS

H. C. Savage

DATE ISSUED:

NOV 22 1949

10-20-49

OAK RIDGE NATIONAL LABORATORY
OPERATED BY
Carbide and Carbon Chemicals Corporation
For the
Atomic Energy Commission
Post Office Box P
Oak Ridge, Tennessee

[redacted]

[redacted]

[redacted]

MARTIN MARIETTA ENERGY SYSTEMS LIBRARIES

3 4456 0360454 3

TABLE OF CONTENTS

1.0 ABSTRACT

2.0 GAGE LOCATIONS

2.1 Gage Installation

3.0 TEST EQUIPMENT

4.0 TEST PROCEDURE

5.0 CALCULATIONS

6.0 STRESSES - MEASURED

7.0 CONCLUSIONS

8.0 ACKNOWLEDGMENT

9.0 REFERENCES

[redacted]

[redacted]

[redacted]

1.0 ABSTRACT

The purpose of this investigation was to determine the magnitude of stresses in various parts of the Heterogeneous Pile (MTR) Mock-Up under operating conditions.

Baldwin-Southwark "SR-4" resistance wire strain gages were used in making all strain measurements from which values of stress were calculated.

All stresses were found to be well under the allowable yield strength of the materials involved. A maximum stress of 1875 psi existed in the aluminum tank Section D when the maximum water flow rate of 14,500 GPM was used. At this flow rate the pressure in Tank A was 41 psi and 13 psi in Tank E.

2.0 GAGE LOCATIONS

The space requirements for installing and waterproofing the gages limited to some extent the location and use of the strain gages. However, the parts selected and the location of the gages are believed to represent the points of maximum stress. Figures 2 through 5 give the location of all gages. A large portion of the gages was installed on the outside of aluminum tank Section D which had the smallest design factor of safety.

Where the direction of maximum stress was known, single gages, type A1 and A7, were used. Where the direction of maximum stress was unknown or in

[redacted]

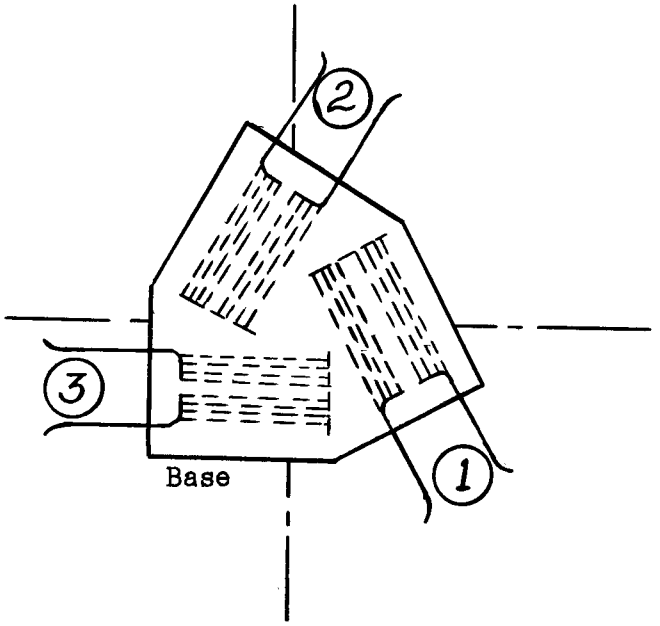

TYPE AR4 - 60° OR EQUIANGULAR (DELTA) ROSSETTE

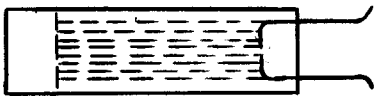

TYPE A1 AND A7 - SINGLE GAGE

FIGURE 1

SR-4 STRAIN GAGES

[redacted]

[redacted]

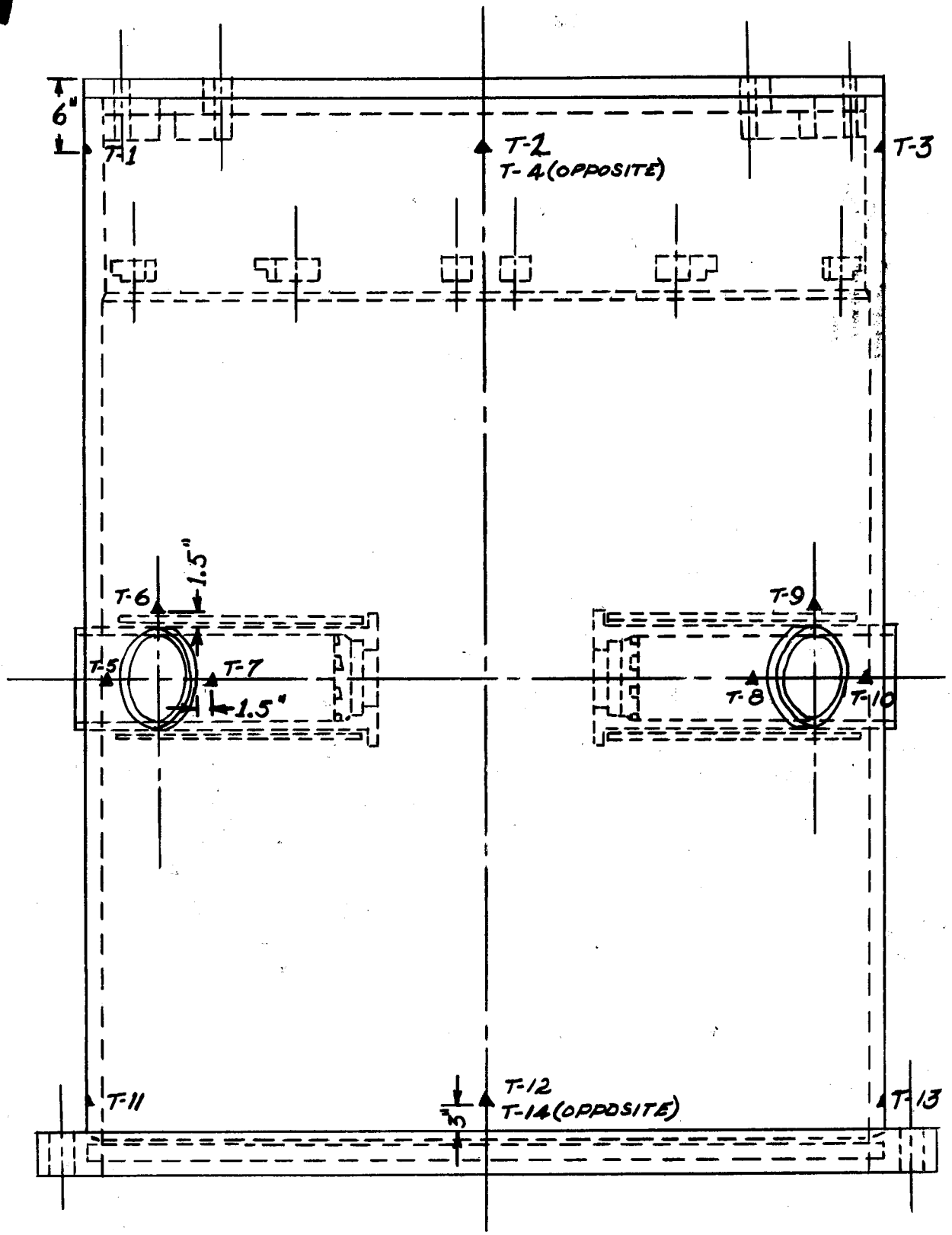

All Gages Type AR4

FIGURE 2 - STRAIN GAGE LOCATION
TANK SECTION D

[redacted]

[redacted]

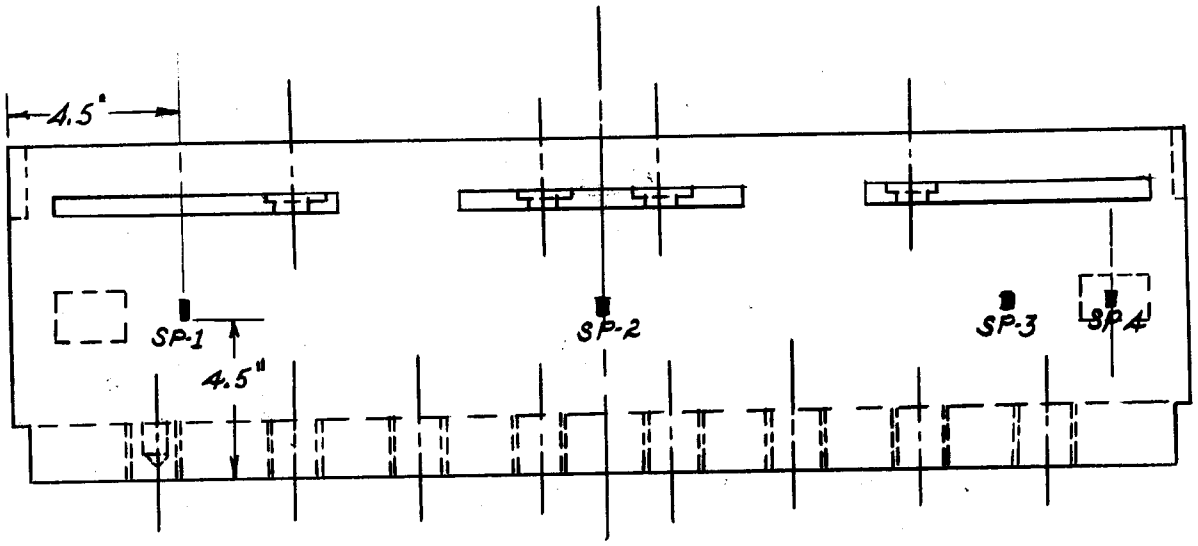

SIDE SKIRT PLATE

Gage No.	Type
SP-1	A 7
SP-2	A 7
SP-3	A 7
SP-4	A 7

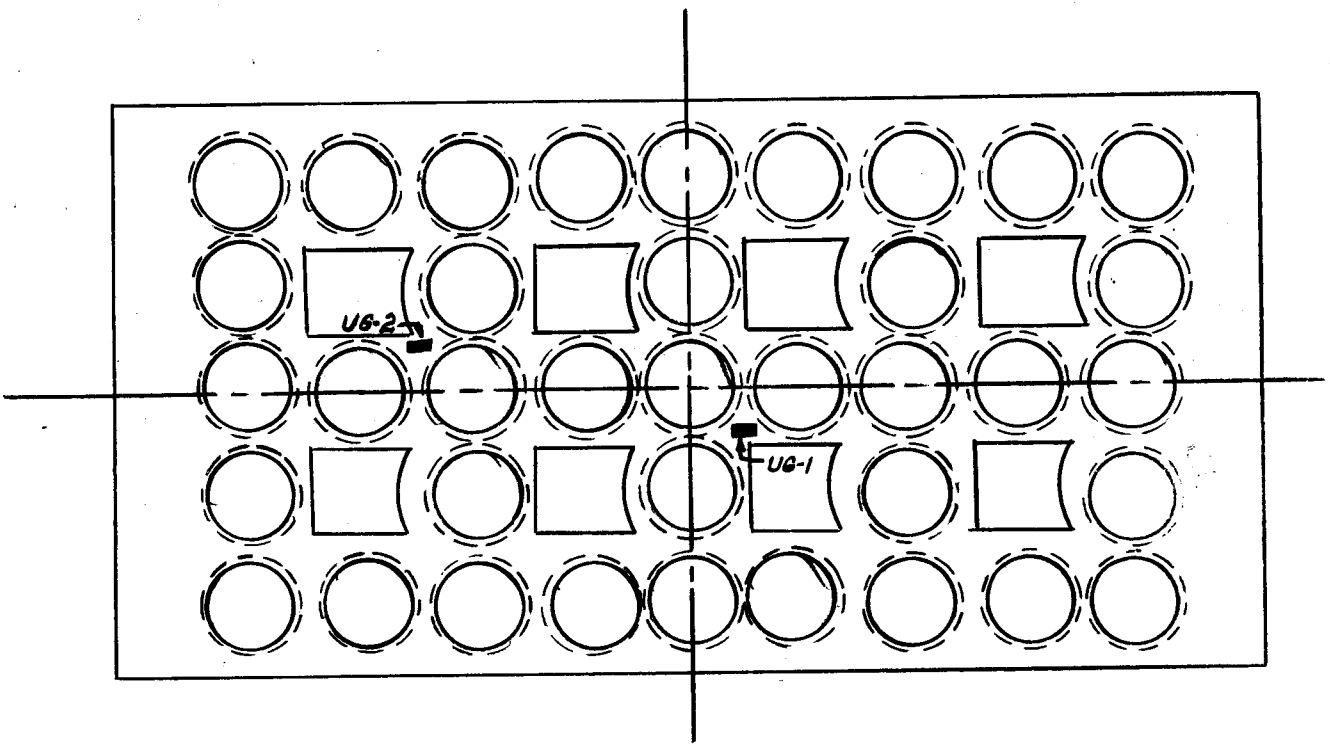

UPPER ASSEMBLY GRID

Gage No.	Type
UG-1	A 7
UG-2	A 7

FIGURE 3 - STRAIN GAGE LOCATION

[redacted]

[redacted]

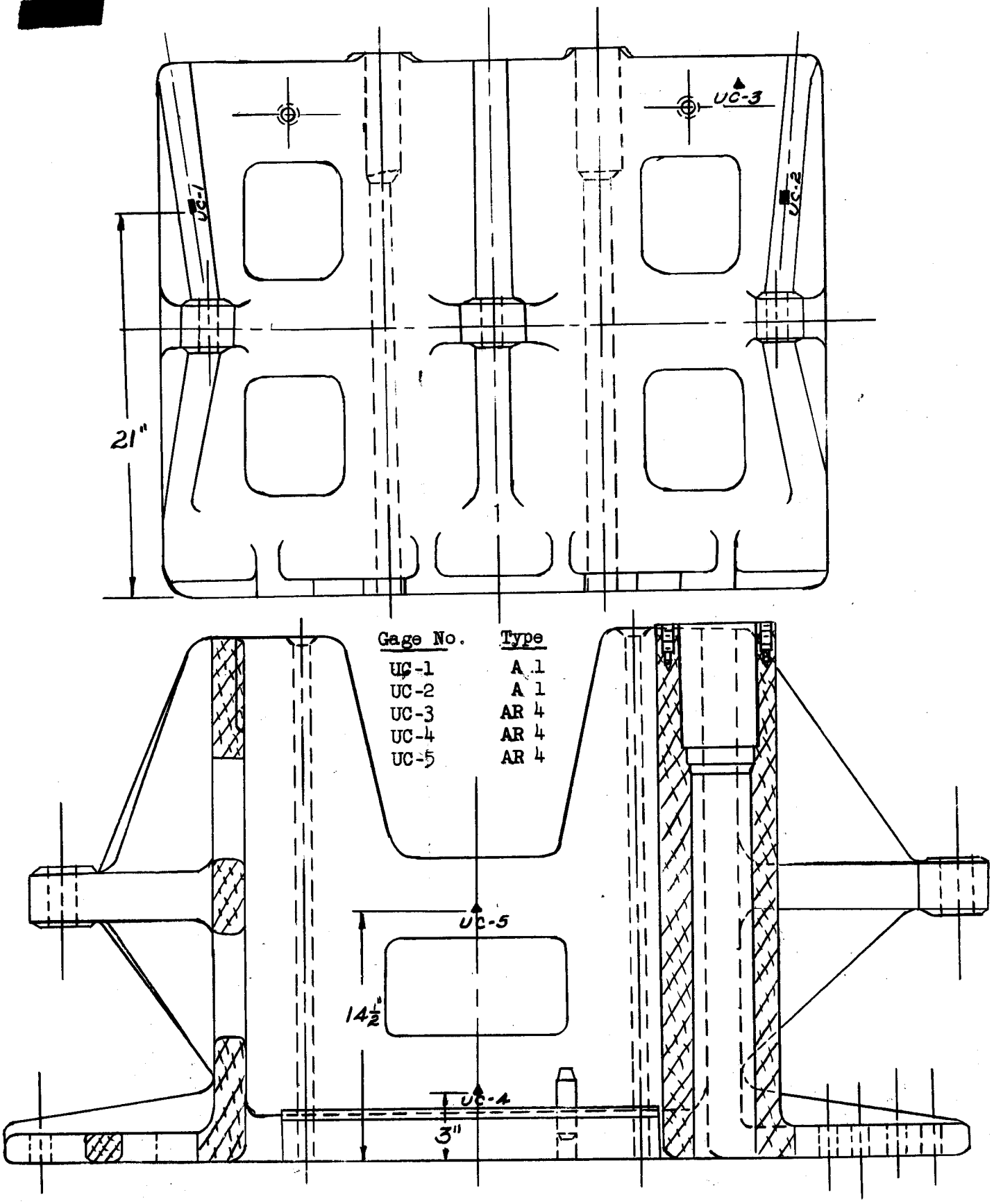

Gage No.	Type
UC-1	A 1
UC-2	A 1
UC-3	AR 4
UC-4	AR 4
UC-5	AR 4

FIGURE 4 - STRAIN GAGE LOCATION
UPPER SUPPORT CASTING

[redacted]

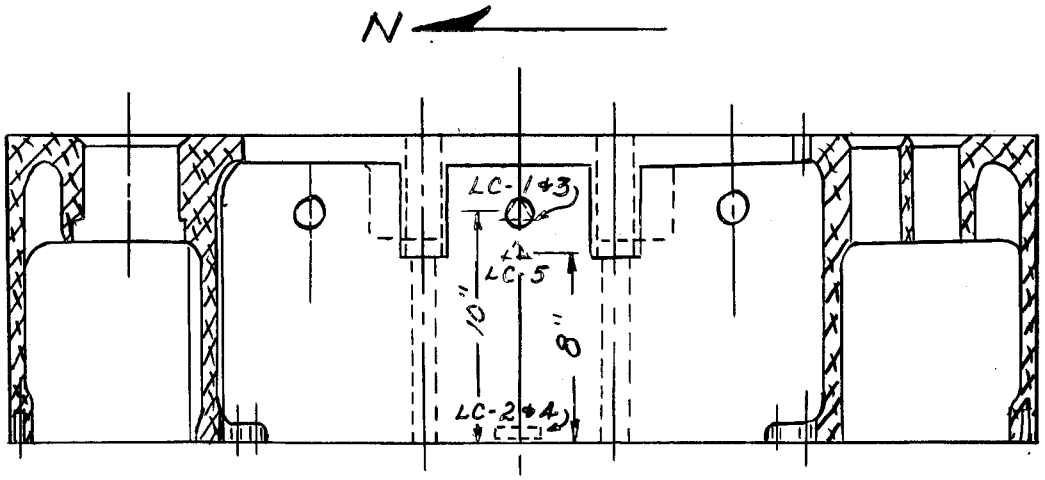

SECTION AA

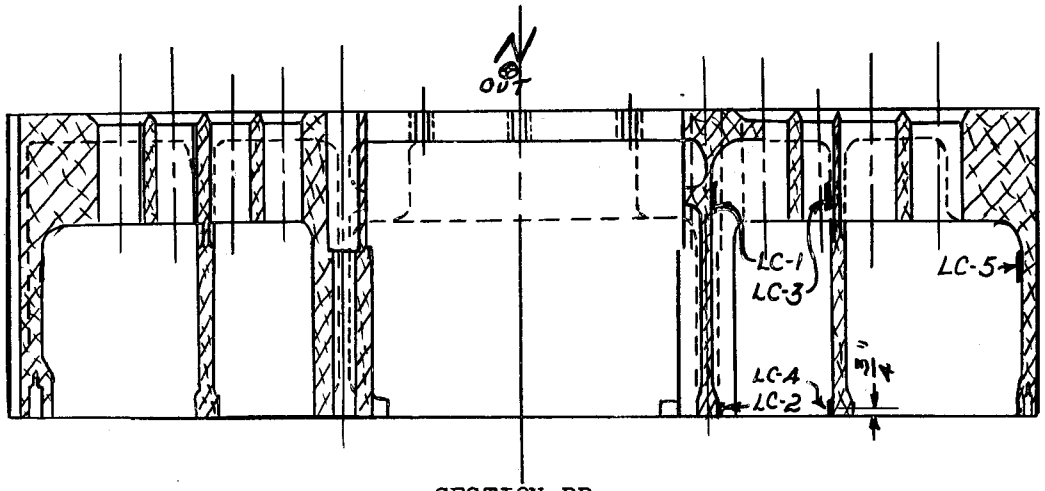

SECTION BB

Gage No.	Type
LC-1	AR-4
LC-2	A 1
LC-3	AR-4
LC-4	A 1
LC-5	AR-4

FIGURE 5 - STRAIN GAGE LOCATION
LOWER GRID SUPPORT
SECTIONS AA & BB (REF.
TD-613, TD-602

2.0 GAGE LOCATIONS (CON'T.)

doubt, delta rosette, type AR-4 gages were used from which the direction and magnitude of maximum stress could be calculated.

2.1 Gage Installation

The paramount problem involved in the installation of the SR-4 strain gages was to protect the inside gages from full submergence in water under a flow rate and pressure of approximately 14,000 GPM and 40-50 psi respectively. Protection from normal weather conditions only was required for the outside gages.

The water proofing compound selected after numerous tests of a number of compounds was Ozite B insulation manufactured by General Cable Corporation. Temperature compensating gages were mounted on plates in the bottom of Tank E for the inside gages and on a non-stressed part of Tank D (outside) for the outside gages.

2.1.1 Installation Procedure

2.1.1.1 Each point was located accurately.

2.1.1.2 Vertical and horizontal scratch lines were drawn to orient the gages. The bases of the delta rosettes were placed horizontally. The single gages were placed in the direction of maximum stress.

2.1.1.3 The metal around each point was sanded as smooth as possible and cleaned with acetone.

2.0 GAGE LOCATIONS (CON'T.)

2.1.1.4 The gages were cemented to the metal in accordance with manufacturer's recommendations and allowed to dry until the resistance between gage and metal was $>$200 megohms. This usually required 6-12 hours. Where possible, drying was speeded up with the use of heat lamps - care being taken not to exceed the maximum temperature limit (175° F) of the gages.

2.1.1.5 Neoprene jacketed cables were used for all leads from the gages to the strain indicator. Four conductor cable was used for the rosette gages. At the gage the four conductors were soldered to three gage leads and one common. Two conductor cable was used for the single gages. All leads were then soldered to the solder pins in the switch box which in turn was connected to the strain indicator.

2.1.1.6 On all gages the jacketed cables were clamped at short distance from the gages to eliminate any cable movement being transmitted to the gages.

2.1.1.7 The inside lead wires were run through the wall of Tank B by means of a packing gland.

2.1.2 Waterproofing Procedure

2.1.2.1 For the gages on the outside of Tank Section "D" a coating of insulating compound B was applied by means of a brush.

2.0 GAGE LOCATIONS (CON'T.)

2.1.2.2 On the inside gages a coating of insulating compound B was applied. To eliminate pin holes the flame of a Prestolite torch was used to flow the compound evenly over the gage - care being taken to seal the compound to the metal surface at the edges. Next a sheet of aluminum foil was placed over the first coat of insulating compound to serve as a moisture barrier and a second coat of Ozite B applied and heat sealed with a Prestolite flame as before.

2.1.3 Circuit Tests

2.1.3.1 Gage resistance (120 ohms) was checked to insure a continuous circuit.

2.1.3.2 A final check of resistance between gage and metal surface was checked. Where possible gages with ground resistances < 100 megohms were replaced.

3.0 TEST EQUIPMENT

Baldwin-Southwark "SR-4" electric resistance wire strain gages, types A1, A7 and AR4 were used in conjunction with a Baldwin-Southwark Strain Indicator, type K. This indicator is calibrated such that the difference between any two readings of a strain gage represents strain in micro inches/inch. Thus stress can be calculated directly when the modulus of elasticity of the material is known. A positive difference indicates tension and a negative

3.0 TEST EQUIPMENT (CON'T.)

difference indicates compression. The types A1 and A7 are single gages with measuring lengths of 13/16 inches and 1/4 inches respectively, the latter gage being used where the surface area available for attaching the gage was small. Type AR4 is a delta rosette consisting of three gages mounted on a common base in the form of an equilateral triangle. From the three readings obtained the magnitude and direction of maximum stress can be calculated.

Since the strain indicator was a single point reading instrument, it was necessary to bring all the gage leads to a switching box which was in turn connected to the recorder.

Four, twenty-five point, L & N rotary switches were used in the switching box. The switches were manually operated when strain readings were made.

4.0 TEST PROCEDURE

It was desired to measure stress on the various parts of the Mock-Up under operating conditions. Since the strain gages indicate changes in stress from one set of conditions to another, the reference or zero condition was taken with the Mock-Up full of water with zero flow. This was the most convenient condition since a series of readings (full of water, operating conditions, full of water) could be taken in succession over a four or five hour period and eliminate the necessity of draining the water at frequent intervals. A check of the strain between readings at Mock-Up full of water and empty showed negligible stress.

4.0 TEST PROCEDURE (CON'T.)

Thus a set of strain readings was taken with the Mock-Up full of water and then under operating conditions. The difference between these readings represented strain at operating conditions. A final set of readings was taken with the Mock-Up full of water to check the initial readings. This check was good in all cases.

Strain readings were taken over a period of about two weeks - one set of readings per day. Operating conditions were varied to give different values of stress. The Mock-Up was operated for a four or five hour period each day strain readings were taken and shut down over night and week ends.

A log of the operating conditions used is as follows:

Date	Flow	Pressure (Tank A) psi	Pressure (Tank E) psi
7-12-49	14,000 GPM	41	13
7-14-49	14,000 GPM	41	14
7-15-49	11,000 GPM	26	12
7-18-49	14,500 GPM	41	13
7-19-49	12,000 GPM	30	11
7-20-49	10,000 GPM	25	12
7-21-49	13,000 GPM	37	12

Testing was discontinued after 7-21-49 due to failure of some of the interior gages. The outside gages (tank section D) are all in good condition and can be used for testing at a later date.

5.0 CALCULATIONS

The modulus of elasticity, E, was taken as 10^7 psi and Poisson's Ratio, u, as 0.33 for all calculations.

Since the stresses where the single gages type A1 and A7, were located were assumed to be uniaxial, the measured strain in microinches was multiplied directly by E to obtain the stress.

The principal stresses from a 60° or equiangular (delta) rosette (type AR4) are given as

$$T_{max} = \frac{E}{1 - u^2} \left[1/3\ (1-2/b)(1 + u)(R_1 + R_2 + R_3) + \sqrt{2/3}\ (1 + 1/b)(1 - u) \sqrt{(R_1 - R_2)^2 + (R_3 - R_1)^2 + (R_2 - R_3)^2} \right] \quad (1)$$

T_{min} = the same equation as for T_{max}, except a minus sign between the two terms in the brackets (1)

$$\text{Tan } 2\,\phi = \frac{\sqrt{3}\,(R_3 - R_2)}{2R_1 - R_2 - R_3}$$

where, T_{max} and T_{min} are the principal stresses and ϕ is the angle from R_1 to T_{max} as illustrated in Figure 6.

E = Modulus of elasticity

u = Poisson's Ratio

b = Auxiliary gage factor = 1/65

R_1, R_2, and R_3 = Strain reading of delta rosette in microinches/in.

5.0 CALCULATIONS (CON'T.)

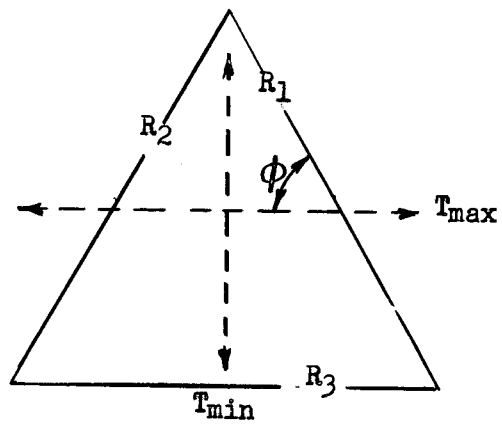

FIGURE 6

The angle 2 ϕ is not completely defined by the sign of the tangent. If the correct value of 2 ϕ is not evident from inspection, it may be determined from the following table which is based on considerations of the sign of the numerator and denominator of the expression for 2 ϕ.

TABLE 1

Tan 2 ϕ		2 ϕ
Numerator	Denominator	
+	+	$0 < 2\phi < 90$
+	-	$90 < 2\phi < 180$
-	-	$180 < 2\phi < 270$
-	+	$270 < 2\phi < 360$

6.0 STRESSES - MEASURED

The magnitude and direction of maximum stresses as computed from measured strains are given in Table II and III. One set of stress values obtained on Tank Section D is plotted on Figure 7 as an illustration.

In some cases the angle ϕ is omitted because of uncertainty. In these cases a small error in the strain reading could have made a difference of 45° in the result by changing the sign of the numerator or denominator in the equation for 2ϕ (see Table I).

The error in strain readings could result in errors of stress of $\pm$ 200 psi. This error is relatively large compared with some of the stresses of 0 to 500 psi. Thus some of the stresses show a large variation, percentage wise, but nevertheless indicates that the stresses are quite small.

7.0 CONCLUSIONS

The results show that all parts of the Mock-Up tested are satisfactorily designed from a stress standpoint. All castings were made of aluminum alloy 356 - T7A with a measured yield strength of 25,000 psi at 0.2% set. The maximum value of stress measured for the castings was 2250 psi on the Lower Support Casting.

Tank Section D and the Side Skirt plates were made of aluminum alloy 3SF with a minimum yield strength of 6,000 psi. The material used in making Tank Section D has a tensile strength of 17,850 psi (3). The maximum value of stress found on these parts was 2150 psi on the wall of Tank Section D.

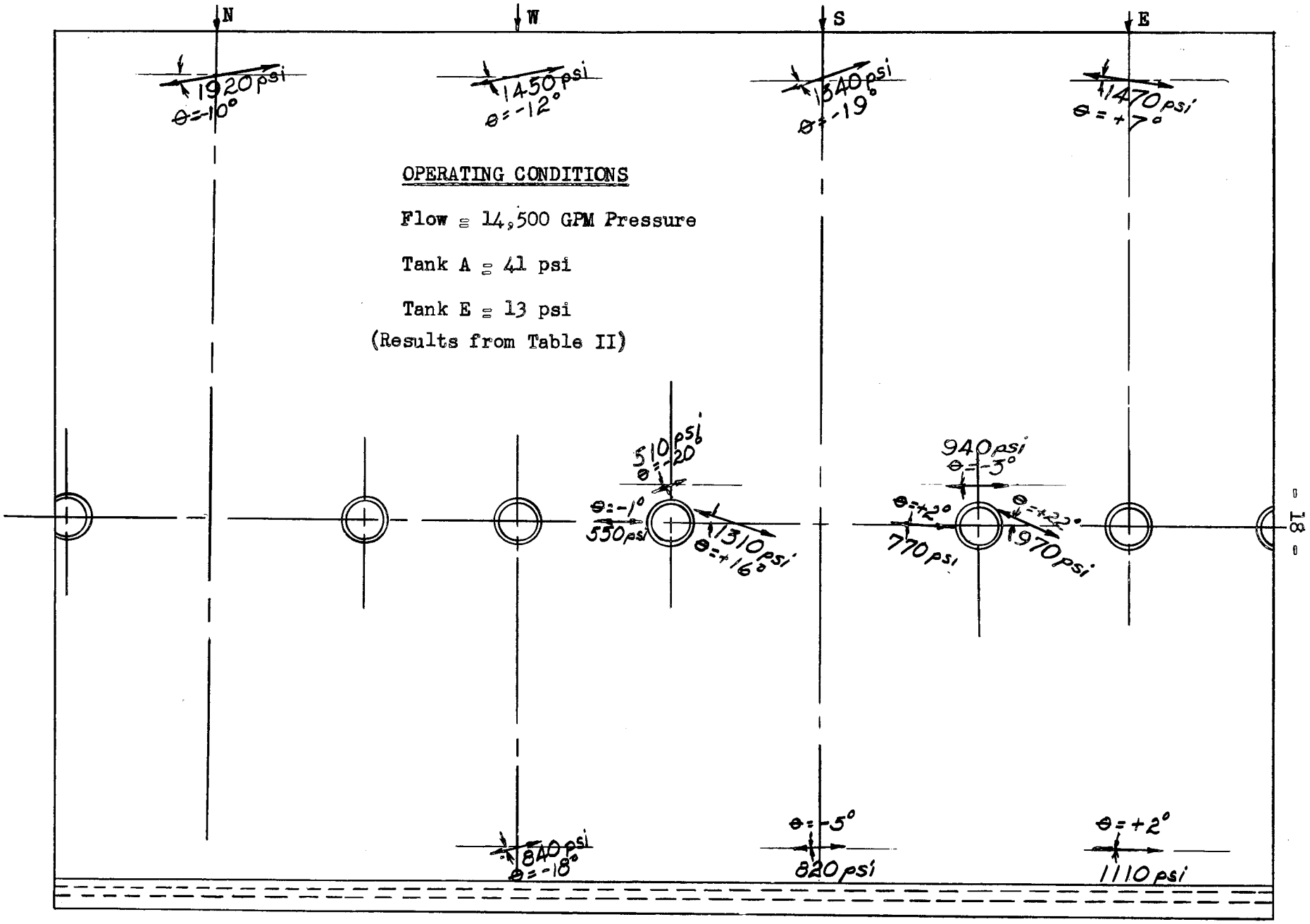

FIGURE 7 - STRESS MEASUREMENTS - TANK SECTION D

[redacted]

TABLE II

MEASURED STRESSES - TANK SECTION D

	OPERATING CONDITIONS							
	Flow = 14,500 GPM Pressure Tank A = 41 psi Tank E = 13 psi		Flow = 13,000 GPM Pressure Tank A = 37 psi Tank E = 13 psi		Flow = 12,000 GPM Pressure Tank A = 30 psi Tank E = 11 psi		Flow = 10,000 GPM Pressure Tank A = 25 psi Tank E = 12 psi	
Gage No.	Max. Stress, psi	*θ°	Max. Stress, psi	*θ°	Max. Stress, psi	*θ°	Max. Stress, psi	*θ°
T-1	1450	-12	1500	-15	1345	-19	685	-15
T-2	1340	-19	1365	-15	1150	-18	560	-20
T-3	1470	+7	1365	-15	1125	-15	400	-15
T-4	1920	-10	1875	-12	1345	-19	790	-2
T-5	550	-1	503	+3	410	0	-80	+7
T-6	510	-20	900	+8	815	+9	90	+8
T-7	1310	+16	1270	-26	955	+27	520	+21
T-8	770	+2	600	+7	750	+3	-80	0
T-9	940	-3	510	-5	700	-3	-90	-15
T-10	970	+22	780	+18	815	+26	-270	+30
T-11	840	-18	740	-15	320	-24	60	-15
T-12	870	-5	370	-5	210	-15	-50	+5
T-13	1110	+2	720	-19	690	-15	-100	-23
T-14	This gage failed							

* θ = angle Ø corrected to read from T_{max} to horizontal

NOTE:
Positive stress indicates tension
Negative stress indicates compression

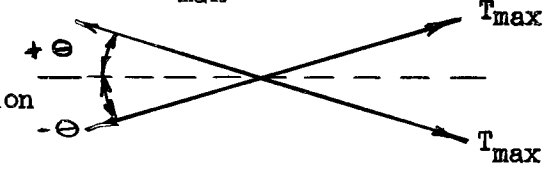

[redacted]

TABLE III

MEASURED STRESS - MOCK-UP SECTIONS

Gage No.	OPERATING CONDITIONS: Flow = 14,[illegible] Flow = 13,000 GPM; Pres[illegible] Pressure; Tank A = 4[illegible] Tank A = 37 psi; Tank E = 1[illegible] Tank E = 12 psi				Flow = 12,000 GPM; Pressure; Tank A = 30 psi; Tank E = 11 psi			Flow = 11,000 GPM; Pressure; Tank A = 26 psi; Tank E = 12 psi			Flow = 10,000 GPM; Pressure; Tank A = 25 psi; Tank E = 12 psi		
	Stress, psi [illegible]ress, psi			* θ°	Stress, psi		* θ°	Stress, psi		* θ°	Stress, psi		* θ°
	Max.	Min.	Min.		Max.	Min.		Max.	Min.		Max.	Min.	
SP-1	1350	---00	---	90°	700	---	90°	200	---	90°	300	---	90°
SP-2	1850	---00	---	90°	300	---	90°	0	---	90°	200	---	90°
SP-3	1750	---00	---	90°	700	---	90°	900	---	90°	800	---	90°
SP-4	1450	---00	---	90°	700	---	90°	800	---	90°	600	---	90°
UG-1	-950	---00	---	0	-300	---	0	-600	---	0	-400	---	0
UG-2	-850	---00	---	0	-300	---	0	-300	---	0	-300	---	0
UC-1	-230	---00	---	**	-200	---	**	-300	---	**	-500	---	**
UC-2	-300	---00	---	**	0	---	**	-100	---	**	-200	---	**
UC-3	-110	-11[illegible]0	-580	+30	-430	-530	+60	-340	-900	+71	-420	-920	+30
UC-4	50	-13[illegible]2	-400	+75	-60	-420	+82	150	-50	+75	-280	-490	+75
UC-5	-515	-920	-220	+65	380	-90	+81	320	-420	+69	160	-250	+75
LC-1	-1325	-2020	-380	+45	-200	-380	+15				-480	-580	+60
LC-2	700	----	---	---	---	---	---	800	---	**	---	---	--
LC-3	0	-1[illegible]iled after one reading obtained											
LC-4	800	----	---	---	0	---	**	400	---	**			
LC-5	-1330	-15[illegible]iled after one reading obtained ---											

** See [illegible]igures. These are single gages and stress is [illegible]gage.

*θ = ang[illegible] to read from $T_{max.}$ to horizontal

NOTE:

Positi[illegible]ates tension
Negati[illegible]ates compression

7.0 CONCLUSIONS (CON'T.)

It must be pointed out that the design criteria in a large number of cases was not stress but other considerations such as vibration, alignment and bearing surface area, so most of the stresses were expected to be small.

8.0 ACKNOWLEDGMENT

Considerable credit is due J. Lundholm and C. A. Mossman of the Instrument Department for their aid in installing the strain gages. The advice of W. R. Gall and F. C. Zapp of the Design Section was indispensable in selecting the best points for strain measurement.

9.0 REFERENCES

1. Experimental Stress Analysis, Vol. II, No. I.
2. Strain Gage Survey Around the Supports of a 48 Foot Hortonsphere. L. P. Zick and C. E. Carlson, Chicago Bridge and Iron Company, January, 1948.
3. Letter from Alcoa to Stacey Bros., Cincinnati, Ohio, November 26, 1948.

H. C. Savage

H. C. Savage

Oct. 19, 1949

Date