UNCLASSIFIED

6A

ORNL 383
PHYSICS-INSTRUMENTATION

MARTIN MARIETTA ENERGY SYSTEMS LIBRARIES
3 4456 0360520 3

CHEMISTRY DIVISION

# AUTOMATIC PRECISION GLASS-ELECTRODE-pH MEASUREMENT WITH A VIBRATING REED ELECTROMETER

KURT A. KRAUS
ROBERT W. HOLMBERG
C. J. BORKOWSKI

OAK RIDGE NATIONAL LABORATORY
CENTRAL RESEARCH LIBRARY
CIRCULATION SECTION
4500N ROOM 175
LIBRARY LOAN COPY
DO NOT TRANSFER TO ANOTHER PERSON
If you wish someone else to see this report, send in name with report and the library will arrange a loan.
UCN-7969 (3 9-77)

OAK RIDGE NATIONAL LABORATORY

OPERATED BY
CARBIDE AND CARBON CHEMICALS CORPORATION
FOR THE
ATOMIC ENERGY COMMISSION
POST OFFICE BOX P
OAK RIDGE, TENNESSEE

UNCLASSIFIED

UNCLASSIFIED

Report Number: ORNL 383

Copy No. 6-a

Contract No. W-7405, eng 26

CHEMISTRY DIVISION

# AUTOMATIC PRECISION GLASS-ELECTRODE - pH MEASUREMENT WITH A VIBRATING REED ELECTROMETER

by

Kurt A. Kraus, Robert W. Holmberg and C. J. Borkowski

DATE ISSUED

SEP 20 1949

O A K R I D G E N A T I O N A L L A B O R A T O R Y

operated by
Carbide and Carbon Chemicals Corporation
for the
Atomic Energy Commission
Post Office Box P
Oak Ridge, Tennessee

UNCLASSIFIED

MARTIN MARIETTA ENERGY SYSTEMS LIBRARIES

3 4456 0360520 3

ORNL 383
Physics-Instrumentation

OAK RIDGE NATIONAL LABORATORY INTERNAL DISTRIBUTION:

1. G. T. Felbeck (C&CCC)
2-3. 706-A Library
4. 706-B Library
5. Biology Library
6-7. Training School Library
8. Health Physics Library
9-12. Central Files
13. J. A. Swartout
14. J. H. Gillette
15. F. L. Steahly
16. A. Hollaender
17. J. H. Frye, Jr.
18. E. J. Murphy
19. M. D. Peterson
20. C. N. Rucker
21. W. D. Lavers
22. R. N. Lyons
23. F. C. VondeLage
24. A. M. Weinberg
25. J. A. Lane
26-35. Kurt A. Kraus
36. S. Y. Tyree
37. M. A. Bredig
38-39. C. J. Borkowski
40. R. W. Holmberg

OAK RIDGE NATIONAL LABORATORY EXTERNAL DISTRIBUTION:

41-48. Argonne National Laboratory
49. Armed Forces Special Weapons Project
50-51. Atomic Energy Commission, Washington
52. Battelle Memorial Institute
53-60. Brookhaven National Laboratory
61. Bureau of Medicine and Surgery
62. Bureau of Ships
63-66. Carbide & Carbon Chemicals Corporation (K-25)
67-70. Carbide & Carbon Chemicals Corporation (Y-12)
71. Chicago Operations Office
72. Cleveland Area Office
73. Columbia University (Dunning)
74. Columbia University (Failla)
75. Dow Chemical Company
76-81. General Electric Company, Richland
82. Hanford Operations Office
83. Idaho Operations Office
84-85. Iowa State College
86. Kansas City
87-91. Knolls Atomic Power Laboratory
92-94. Los Alamos
95. Mallinckrodt Chemical Works
96. Massachusetts Institute of Technology (Gaudin)
97. Massachusetts Institute of Technology (Kaufmann)
98-100. Mound Laboratory
101-102. National Advisory Committee for Aeronautics
103-104. National Bureau of Standards
105-106. Naval Radiological Defense Laboratory
107-108. NEPA Project
109. New Brunswick Laboratory
110-114. New York Operations Office
115. North American Aviation, Inc.
116. Patent Advisor, Washington
117. Rand Corporation
118. Sandia Base
119. Sylvania Electric Products, Inc.
120. U. S. Public Health Service
121. UCLA Medical Research Laboratory (Warren)
122-126. University of California Radiation Laboratory
127-128. University of Rochester
129. University of Washington
130-131. Western Reserve University (Friedell)
132-135. Westinghouse

# AUTOMATIC PRECISION GLASS-ELECTRODE - pH MEASUREMENT WITH A VIBRATING REED ELECTROMETER*

Kurt A. Kraus, Robert W. Holmberg and C. J. Borkowski
Oak Ridge National Laboratory, Oak Ridge, Tennessee

## SUMMARY

Using a vibrating reed electrometer as detector, the potentials of glass-electrode assemblies were recorded on a strip chart recorder. The precision of the measurements is approximately that of a type K potentiometer and the reproducibility is sufficiently high to make it feasible to determine acidities of solutions to better than 0.1% under favorable conditions.

---

The purpose of this paper is to describe the use of the vibrating reed (also called dynamic condenser or capacitative commutator) electrometer for high precision pH measurements with glass-electrodes. The instrument may be used with a strip-chart recorder and the voltage sensitivity attainable is determined by the accuracy of the auxiliary potentiometer, which in this work has been a Leeds and Northrup type K potentiometer. LeCaine and Waghorne have described a vibrating reed electrometer for ionization current measurements[1]. Scherbatskoy and co-workers used a similar instrument[2, 3, 4] for radioactivity measurements in oil-well logging

*This document is based on work performed under Contract Number W-7405 eng 26 for the Atomic Energy Project at Oak Ridge National Laboratory.

where an instrument of high current sensitivity, of great ruggedness and adaptability for automatic operation was desired. A detailed study of this instrument has been made by Palevsky and co-workers[5] who also made certain design changes and improvements. All of the authors point out that the instrument can be used for potential measurements in high resistance circuits.

This instrument appeared to be ideally suited for voltage measurements of glass-electrode assemblies and was expected to be a considerable improvement over the usual vacuum-tube electrometers, since it appeared to combine great ruggedness and freedom from zero drifts with high sensitivity, adaptability for automatic recordings, and complete 110 volt a.c. operation. Since its first tests several years ago as a recording precision high impedance potentiometer the instrument has been used routinely for precision potential measurements in this laboratory[6, 7]. The same instrument has also been routinely used for potential measurements in low resistance circuits as well.

## Apparatus

a) Electronic equipment. The vibrating reed electrometer is essentially a high resistance d.c. voltmeter which is capable of measuring voltages in circuits of resistance up to $10^{15}$ ohms. Since the d.c. potential is converted to an a.c. voltage by the "chopper" or dynamic condenser, a stable a.c. amplifier can be used in a 100% feedback system. In this manner the vibrating reed operates as a null type instrument where variations in the amplifier gain or in power supply voltages do not contribute to zero drift. With proper design the sensitivity is limited only by the noise produced by the

thermal agitation in the input circuit. The zero drift, which is due to the changes of contact potential of the dynamic condenser surfaces, is usually about 0.1 millivolt in 24 hours.

The block diagram in Fig. 1 shows a typical self-balancing 60 cycle vibrating reed. When a voltage appears across the dynamic condenser input, an a.c. voltage is generated and amplified by the a.c. amplifier. The output of the amplifier drives a motor which in turn adjusts the potentiometer to the null position. The indicated voltage on the self-balancing potentiometer is equal to the input voltage. In this way completely automatic recording of the potentials is made. Where maximum precision is required, the recorder slide wire should balance only a small fraction of the total cell potential e.g., 3 or 10 millivolts full scale, while the major fraction of the cell potential is balanced manually by a high precision potentiometer (e.g., Rubicon Precision potentiometer or L and N type K-2 (potentiometer). Since this potentiometer is on the low impedence side of the circuit it need not be shielded. Calibration of the potentiometer can readily be achieved with the same circuit. The potential of a standard cell is fed into the vibrating reed input and its potential balanced against the output of the potentiometer whose dials are set for the nominal voltage of the standard cell. The Brown recorder is used as a null indicator.

Fig. 1 does not represent a unique circuit and certain variants are possible. For example, the type K potentiometer can be placed between the calomel cell and ground or a 300 cycle reed with electronic feedback may be used.

The construction of the dynamic condenser requires considerable skill especially in the preparation of the condenser surfaces where

it is important to obtain low and stable contact potentials. Both so-called "60 cycle"[4] and "300 cycle" reeds[8] have been used. Since in the former case the reed is driven by standard 60 cycle 110 volt a.c., the Brown amplifier can be used directly with only minor changes, such as removal of the "chopper", and addition of a pre-amplifier. If a recorder is to be used the design of the 60 cycle reed is in general much simpler than that of the 300 cycle reed for which a special oscillator is needed as well as a separate amplifier and detector. The 300 cycle reed requires more maintenance in general than the 60 cycle reed. Nevertheless, most of the measurements which will be reported here have been carried out with the 300-cycle reed. A photograph of the complete assembly, using a 300-cycle reed, is shown in Fig. 2.

In all earlier measurements the Brown recorder was adjusted to give 10 mv. full scale deflection, and thus a reading accuracy of 0.01-0.02 mv. More recently recorders with full-scale sensitivity of 3 mv. have been used (giving a reading accuracy of 0.003-0.006 mv.). Although it appears that from the point of view of noise level still greater sensitivity could be used (e.g., 1 mv. full scale) the reproducibility of the measurements does not seem to warrant this at present, particularly since with this sensitivity the instrument would need considerably more attention in kinetic studies where the changes of potential with time are of interest.

b) <u>Shielding</u>. Aside from connecting cables, shielding is only needed for the glass-electrode assembly. This can be readily achieved by enclosing the cell and electrodes in an aluminum box.

NOT CLASSIFIED
DWG. 7626

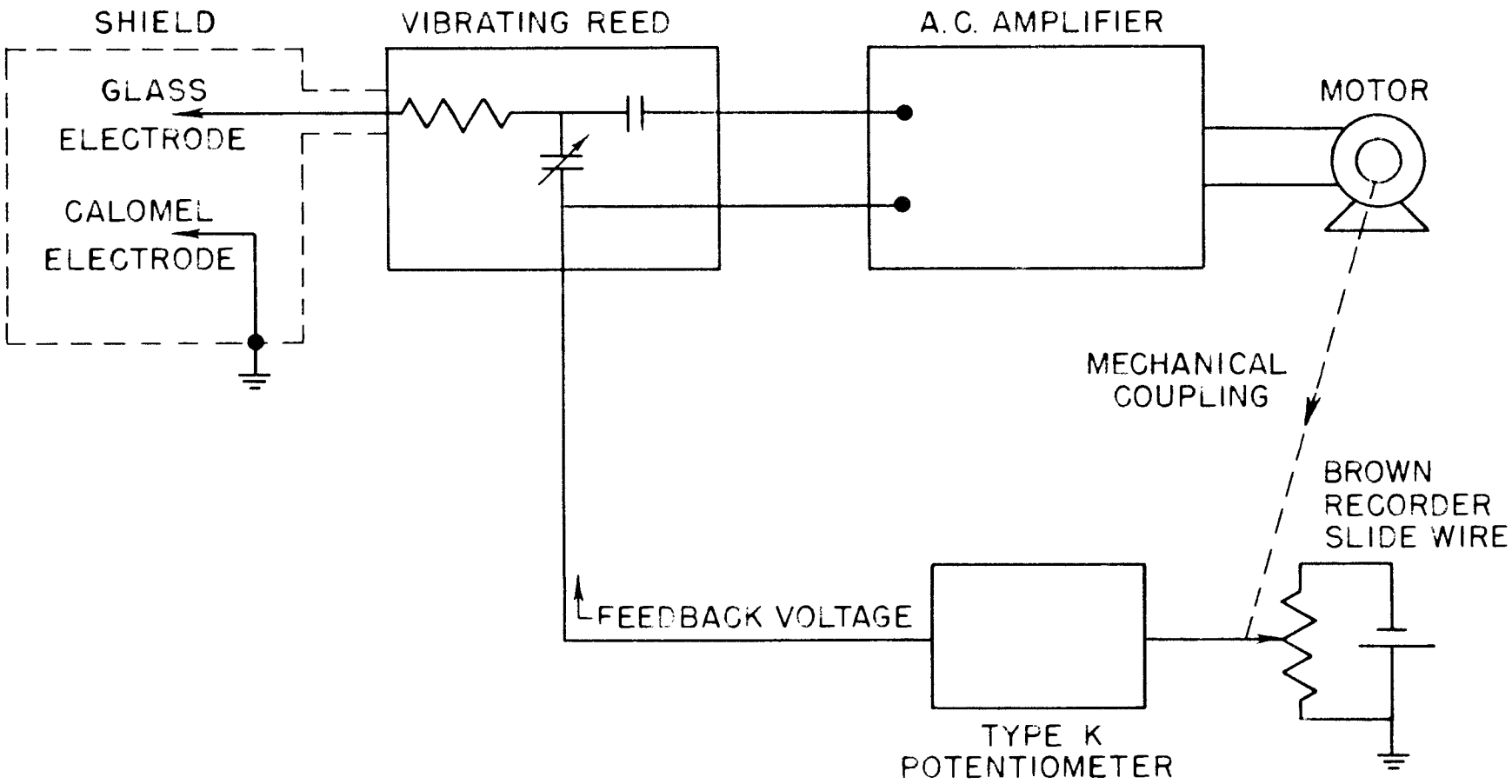


FIG. 1
BLOCK DIAGRAM OF VIBRATING REED ASSEMBLY

NOT CLASSIFIED
PHOTO 5128

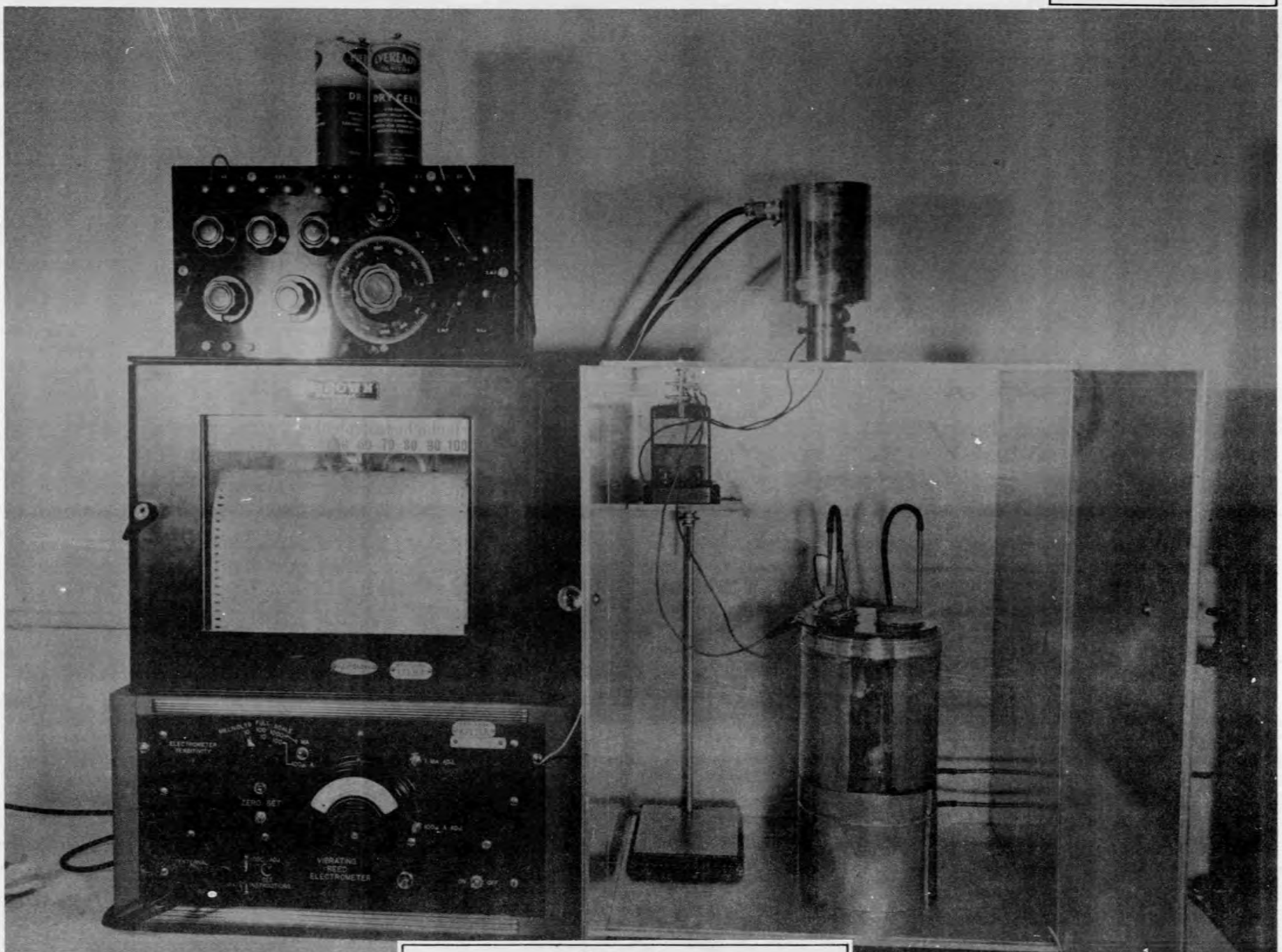


FIG. 2

c) Temperature Control. Temperature control of the cell within the box was achieved by placing it through a cover into a Dewar flask, filled with water. The temperature within the Dewar was maintained at the proper temperature by placing into it a copper coil through which thermostated water was pumped. This arrangement did not cause troubles in the detecting circuit provided the coil was grounded to the case.

The cells were at first coated with paraffin on the outside. However, omission of such coating did not appear to influence the results.

Since careful temperature control of the calomel electrode appeared of importance some calomel electrodes were specially assembled in small Dewar flasks as illustrated in Fig. 3. These electrodes maintained temperature very well provided the room temperature did not drop below the temperature of the assembly. When this occurred the temperature of the assembly dropped rapidly, presumably because of convection currents in the salt bridge projecting beyond the Dewar. The assembly only very slowly returned to its original temperature even if continuously immersed in a thermostat. Careful insulation of the salt bridge and total immersion in a thermostat when not in use circumvented this complication reasonably well.

d) Electrodes. Most experiments were carried out with standard Beckman electrodes, namely, calomel electrode No. 270, and glass electrode No. 290. Since measurements of potentials in circuits having resistances as great as $10^{12}$ ohms can readily be made, glass-

NOT CLASSIFIED
DWG. 7627

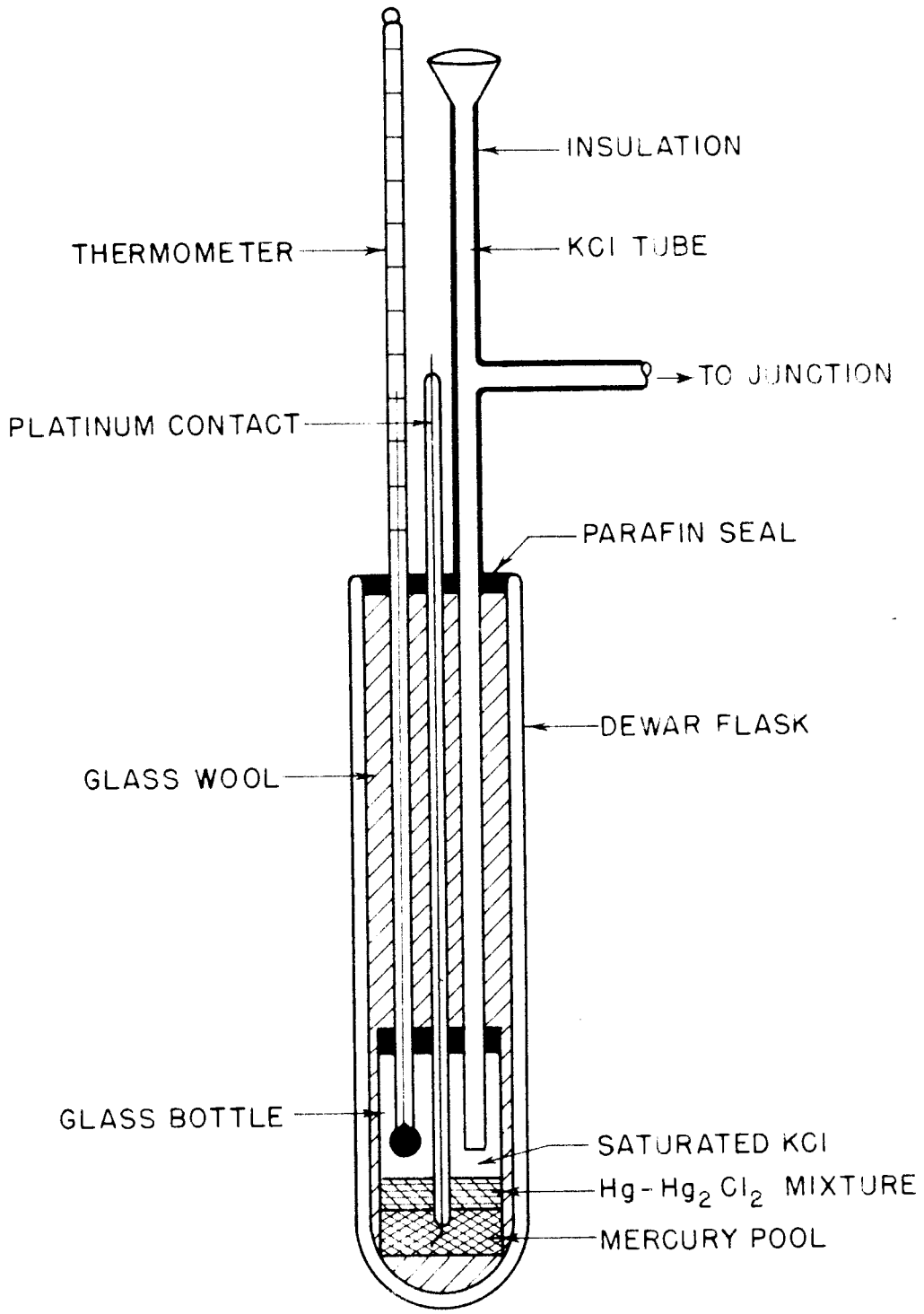


FIG. 3
CALOMEL HALF-CELL IN DEWAR FLASK

electrodes of resistance very much higher than the usual c.a. $10^8$ ohms could probably be used.

## Results

In a cell of the type used in pH measurements the precision and reproducibility is determined by a number of factors aside from the characteristics of the electronic circuit. These are primarily the response of the measuring electrode, reproducibility of the liquid junction potentials and drift in the reference potential. It was found that these factors are considerably more important than the characteristics of the measuring circuit, which is very fast, reproducible and free of drift as indicated by measurement of the potential of a standard cell.

The potentials of glass-electrode assemblies often show prolonged drifts which may last from a few minutes to several hours and may be as high as several millivolts. It is believed that these drifts are due to changes in the liquid junction potentials with time or changes in the characteristics of the glass electrodes. If the glass-electrodes have been aged at not too high an acidity (i.e, in 0.01M HCl) they do not contribute appreciably to the drift. This can be demonstrated by measuring potentials in a cell without liquid junction (i.e., consisting of two well-aged glass-electrodes) where such drifts are negligible. Similarly the prolonged drifts can often be eliminated by replacement of the calomel assembly. It appears that these drifts become prominent if the flow-rate of the calomel "electrodes" through the asbestos wick is too small. For the measurements which are reported here the calomel electrodes were selected for low drift.

The generally accepted technique of using glass-electrodes involves their standardization (preferably at 2 points) before measurement. Thus, glass-electrodes are usually only used to establish differences in acidities rather than absolute values. By strictly following this procedure the sensitivity of the instrument can be utilized fully without special precautions as shown in Table 1.

Table 1

Potential of Glass-Calomel (sat'd KCl) Electrode Assembly without Special Temperature Control (T = 25 ± 1°C)

$E_i$ = potential (mv.) in 0.01013 M HCl

$E_f$ = potential (mv.) after addition of 0.4992 ml 0.1000 M HCl to 15 ml 0.01013 M HCl
Brown recorder - full scale sensitivity: 10 mv.

| | $E_i$ | $E_f$ | $\Delta E$ |
|---|---|---|---|
| (1) | 332.52 | 338.97 | 6.45 |
| (2) | 332.36 | 338.84 | 6.48 |
| (3) | 332.28 | 338.74 | 6.46 |
| (4) | 332.30 | 338.72 | 6.42 |
| (5) | 332.35 | 338.79 | 6.44 |
| (6) | 332.38 | 338.79 | 6.41 |
| (7) | 332.39 | 338.86 | 6.47 |
| (8) | 332.30 | 338.78 | 6.48 |
| (9) | 332.46 | 338.96 | 6.50 |
| (10) | 332.44 | 338.90 | 6.46 |
| (11) | 332.51 | 339.00 | 6.49 |
| (12) | 332.61 | 339.02 | 6.41 |
| Average | 332.41 | 338.86 | 6.456 |
| $\sigma$ | 0.10 | 0.10 | 0.032 |

The data for this table were compiled by making a series of consecutive measurements in an air conditioned room whose temperature was 25 ± 1°C. No other attempts were made to control temperature. The potential of the cell containing 0.01013 M HCl was followed until it was constant, 0.4992 ml of 0.1000 M HCl were then added and the resulting potential change recorded. The cell was then cleaned and the

measurements repeated. It may be noticed from Table 1, that the potential changes ($\Delta E$) thus attained show a considerably smaller standard deviation ($\sigma$)* than the various readings for the same

*$\sigma$ was calculated according to the equation $\sigma = \sqrt{\frac{(\bar{x}-x)^2}{(n-1)}}$ where n is the number of observations, $\bar{x}$ the arithmetrical average and x the observed value.

acid. Since $\sigma$ for $\Delta E$ was only slightly larger than the estimated reading error (10 mv. full scale) it appeared that recording at a smaller value for full scale sensitivity would further lower the standard deviation of the readings.

A similar set of data, determined at a full scale sensitivity of 3 mv. is shown in Table 2. For these data the cell was thermostated as described in Section 2c. The recorded measurements represent the alternate measurements (to equilibrium) of 0.01003 M and 0.00439 M HCl solutions over a period of two weeks using the same electrodes. It may be noticed that the "absolute" readings showed a standard derivation $\sigma$ = ca. 0.1 mv., while the differences showed the very low value $\sigma$ = 0.013.

It is believed that the rather large values of $\sigma$ for the "absolute" measurements is mainly due to inadequate thermostating of the calomel electrode. For this reason a calomel half cell, built in a small Dewar flask as described above was used for a series of similar measurements (Table 3) using a recorder of 10 mv. full scale sensitivity. For this series of measurements the solutions again were alternated and the series completed in one 8 hour period. The standard deviations for the "absolute" readings were only 0.025 mv. in close agreement with the error for the differences ($\Delta E$) of the measurements in this series as well as the series in Table 1.

Table 2

Potential of Glass-Electrode (sat'd KCl) Electrode Assembly with Temperature Control

Alternating measurements of two acids A: 0.01003 M HCl
B: 0.00439 M HCl

Solution temperature 25.10 ± 0.05°C.

Brown Recorder - Full scale sensitivity: 3 mv.

| Date | A | B | $\Delta$ E |
|---|---|---|---|
| 5/15 | 331.220 | 310.034 | 21.186 |
| | 331.205 | 309.997 | 21.208 |
| | 331.205 | 310.037 | 21.168 |
| | 331.165 | 310.003 | 21.162 |
| | 331.153 | 309.970 | 21.183 |
| | 331.156 | 309.961 | 21.195 |
| | 331.159 | 309.973 | 21.186 |
| | 331.159 | 309.967 | 21.192 |
| | 331.144 | 309.961 | 21.183 |
| | 331.138 | 309.958 | 21.180 |
| 5/17 | 331.058 | 309.891 | 21.167 |
| 5/18 | 331.263 | 310.104 | 21.159 |
| | 331.278 | 310.083 | 21.195 |
| 5/25 | 331.281 | 310.086 | 21.195 |
| 5/26 | 331.296 | 310.107 | 21.189 |
| | 331.424 | 310.241 | 21.183 |
| | 331.378 | 310.205 | 21.174 |
| 5/27 | 331.083 | 309.893 | 21.189 |
| Average | 331.209 | 310.026 | 21.183 |
| $\sigma$ | 0.096 | 0.096 | 0.013 |

Table 3

Potential of Glass-Calomel (Sat'd KCl) Electrode Assembly with Special Temperature Control of Calomel Cell.

Alternating measurements of two acids A: 0.01004 M HCl,
B: 0.005025 M HCl

Ionic strength: 0.5 (KCl)

Temperature: 24.67 ± 0.03°C

Brown Recorder - full scale sensitivity 10 mv.

| | 0.01004 M $H_3O^+$ | | 0.005025 M $H_3O^+$ | $\Delta E$ |
|---|---|---|---|---|
| (1) | 330.74 | (2) | 313.45 | 17.29 |
| (3) | 330.76 | (4) | 313.43 | 17.33 |
| (5) | 330.75 | (6) | 313.43 | 17.32 |
| (7) | 330.75 | (8) | 313.46 | 17.29 |
| (9) | 330.80 | (10) | 313.45 | 17.35 |
| (11) | 330.75 | (12) | 313.40 | 17.35 |
| (13) | (330.29) | (14) | 313.38 | - |
| (15) | 330.73 | (16) | 313.45 | 17.28 |
| (17) | 330.72 | (18) | 313.43 | 17.29 |
| (21) | 330.75 | (22) | 313.42 | 17.33 |
| (23) | 330.76 | (24) | 313.40 | 17.36 |
| Average | 330.751 (a) | | 313.427 | 17.319 |
| $\sigma$ | 0.021 (a) | | 0.025 | 0.030 |

(a) Average calculated excluding number 13.

Since, thus, the standard deviation for the measurement of potential differences is rather low (under favorable circumstances $\pm$ 0.015 mv.) it appears feasible to determine the concentration of acids by glass-electrode pH measurements directly without need for titration provided all other variables are carefully controlled and standardized. This may be of particular interest for solutions containing hydrolyzable ions. If the permissible analytical error is 0.1%, a total error in the potential measurements of ca. 26 $\mu$ v can be tolerated. As can be seen from Table 2 this is almost twice the standard deviation which can be attained.

For proper use of the glass-electrode for measurement of the acidity of solutions, it is necessary to determine the Nernst slopes (potential change of assembly for a ten-fold change in oxonium ion activity) in the acid systems under consideration. These slopes (which at 25°C should be 59.15 mv.) were found to vary considerably for different electrodes as shown in Table 4 and for different acidities as will be discussed in a later paper. The differences shown for electrodes 1, 2 and 3 in Table 4 are quite reproducible and far outside the experimental error. The slopes were calculated assuming that the activity coefficients of the oxonium ions and the liquid junction potentials are the same for the two acids, since the acid change was small compared with the total ionic strength of the solutions.

Some data on Eimer and Amend standard buffers of nominal pH 4.00 $\pm$ 0.01 and 7.00 $\pm$ 0.02 have been included. It may be noticed that the Nernst slopes are somewhat high, the deviation from the theoretical value being outside the experimental error.

Measurements of potential differences for different acids using the same glass-electrode and different calomel electrodes are shown in Table 5. The data were obtained simultaneously for the three combinations of electrodes and it can be seen that the potential differences found are independent of the particular calomel electrode used.

Table 4

Nernst Slopes for Various Glass Electrodes

| Glass Electrode | E (mv.) 0.01004 M HCl | E (mv.) 0.005025 M HCl | ΔE(mv.) | Slope (mv./pH) | Recorder-Full Scale (mv.) |
|---|---|---|---|---|---|
| 1 | 330.77 | 313.44 | 17.33 | 57.6 | 10 |
| 2 | 349.28 | 331.30 | 17.98 | 59.6 | 10 |
| 3 | 331.05 | 313.52 | 17.53 | 58.3 | 10 |
| | 0.010029 M HCl | 0.004391 M HCl | | | |
| 4 | 342.735 | 321.542 | 21.193 | 59.08 | 3 |
| 5 | 361.332 | 340.214 | 21.118 | 58.87 | 3 |
| 6 | 389.677 | 368.570 | 21.107 | 58.84 | 3 |
| | E & A buffers pH 4.00 | pH 7.00 | | | |
| 4 | 232.38 | 49.84 | 182.54 | 60.84 | 3 |
| 5 | 251.82 | 69.20 | 182.62 | 60.87 | 3 |
| 6 | 280.14 | 97.52 | 182.62 | 60.87 | 3 |

Table 5

Influence of Calomel Cell on Nernst Slopes

(Ionic Strength 0.5 (KCl))

| Calomel Electrode | E (mv.) 0.01003 M HCl | E (mv.) 0.004391 M HCl | Δ E(mv.) | Slope (mv./pH) | Recorder Full Scale (mv.) |
|---|---|---|---|---|---|
| 1 | 342.927 | 321.839 | 21.09 | 58.96 | 3 |
| 2 | 342.848 | 321.732 | 21.12 | 59.04 | 3 |
| 3 | 342.604 | 321.528 | 21.08 | 58.93 | 3 |

## Literature Cited


(1) LeCaine, H. and Waghorne, J. G., Can. J. Research 19, 21 (1941).
(2) Scherbatskoy, S. A., et al. U.S. Patent No. 2,349,225 (May 16, 1944) and No. 2,361,389 (October 31, 1944).
(3) Scherbatskoy, S. A. and Fearson, R. E., Phys. Rev. 70.96 (1946).
(4) Scherbatskoy, S. A., Gilmartin, T. H. and Swift, G., Rev. Sci. Instruments 18.415 (1947).
(5) Palevsky, H., Swank, R. K. and Grenchik, R., Rev. Sci. Instruments 18.298 (1947).
(6) Kraus, K. A., Holmberg, R. W. and Nelson, F., Reports CNL-37 (April, 1948), and ORNL-65 (June, 1948).
(7) Kraus, K. A. and Nelson, F., J. Am. Chem. Soc., 71.2517 (1949).
(8) Swank, R. K., Forstat, H., Report CP-3595 (August, 1946).


## Acknowledgement


It is a pleasure to acknowledge the assistance of Mr. J. East and Mr. O. C. Cole in assembling and maintaining the instruments. We are indebted to the Instrument Divisions of the Metallurgical Laboratory) of the University of Chicago (now Argonne National Laboratory) and of the Oak Ridge National Laboratory for the reeds and amplifiers.