CENTRAL RESEARCH LIBRARY
DOCUMENT COLLECTION

UNCLASSIFIED

ORNL 403
PHYSICS-GENERAL

MARTIN MARIETTA ENERGY SYSTEMS LIBRARIES
3 4456 0360531 0

cy. 1A

PHYSICS DIVISION

# SOLUTION OF THE DIFFUSION EQUATION WITH STREAMING FOR THREE BASIC TWO MEDIUM GEOMETRIES

D. W. WHITCOMBE
NICHOLAS M. SMITH, JR.

CENTRAL RESEARCH LIBRARY
DOCUMENT COLLECTION
LIBRARY LOAN COPY
DO NOT TRANSFER TO ANOTHER PERSON
If you wish someone else to see this document, send in name with document and the library will arrange a loan.

OAK RIDGE NATIONAL LABORATORY

OPERATED BY
CARBIDE AND CARBON CHEMICALS CORPORATION
FOR THE
ATOMIC ENERGY COMMISSION
POST OFFICE BOX P
OAK RIDGE, TENNESSEE

UNCLASSIFIED

UNCLASSIFIED ORNL-403

This document consists of 48 pages.
Copy 7 of 132 Series A

ISSUED:

Contract No. W-7405, eng 26

PHYSICS DIVISION

# SOLUTION OF THE DIFFUSION EQUATION WITH STREAMING FOR THREE BASIC TWO MEDIUM GEOMETRIES

D. W. Whitcombe and Nicholas M. Smith, Jr.

DATE ISSUED

OCT 7 1949

O A K R I D G E N A T I O N A L L A B O R A T O R Y

operated by
Carbide and Carbon Chemicals Corporation
for the
Atomic Energy Commission
Post Office Box P
Oak Ridge, Tennessee

UNCLASSIFIED

MARTIN MARIETTA ENERGY SYSTEMS LIBRARIES

3 4456 0360531 0

OAK RIDGE NATIONAL LABORATORY INTERNAL DISTRIBUTION:

1. G. T. Felbeck (C&CCC)
2. 706-A Library
3. 706-A Library
4. 706-B Library
5. Biology Library
6. Health Physics Library
7. Training School Library
8. Training School Library
9. Central Files
10. Central Files
11. Central Files
12. Central Files
13. J. A. Swartout
14. J. H. Gillette
15. A. S. Householder
16. J. H. Frye, Jr.
17. E. J. Murphy
18. M. D. Peterson
19. C. N. Rucker
20. W. D. Lavers
21. A. M. Weinberg
22. J. A. Lane
23. A. Hollaender
24. R. N. Lyon
25. M. M. Mann
26. D. W. Whitcombe
27. N. M. Smith, Jr.
28. L. C. Noderer

OAK RIDGE NATIONAL LABORATORY EXTERNAL DISTRIBUTION:

29-37. Argonne National Laboratory
38. Armed Forces Special Weapons Project
39-40. Atomic Energy Commission, Washington
41. Battelle Memorial Institute
42-49. Brookhaven National Laboratory
50. Bureau of Medicine and Surgery
51. Bureau of Ships
52-55. Carbide & Carbon Chemicals Corporation (K-25)
56-59. Carbide & Carbon Chemicals Corporation (Y-12)
60. Chicago Operations Office
61. Cleveland Area Office
62. Columbia University (Dunning)
63. Columbia University (Failla)
64. Dow Chemical Company
65-70. General Electric Company, Richland
71. Hanford Operations Office
72. Idaho Operations Office
73-74. Iowa State College
75. Kansas City
76-81. Knolls Atomic Power Laboratory
82-84. Los Alamos
85. Mallinckrodt Chemical Works
86. Massachusetts Institute of Technology (Gaudin)
87. Massachusetts Institute of Technology (Kaufmann)
88-90. Mound Laboratory
91-92. National Advisory Committee for Aeronautics
93-94. National Bureau of Standards
95-96. Naval Radiological Defense Laboratory
97-98. Nuclear Development Associates
99-105. NEPA Project
106. New Brunswick Laboratory
107-111. New York Operations Office
112. North American Aviation, Inc.
113. Patent Advisor, Washington
114. Rand Corporation
115. Sandia Base
116. Sylvania Electric Products, Inc.
117. U. S. Public Health Service
118. UCLA Medical Research Laboratory (Warren)
119-123. University of California Radiation Laboratory
124-125. University of Rochester
126. University of Washington
127-128. Western Reserve University (Friedell)
129-132. Westinghouse

ORNL-403

# SOLUTION OF THE DIFFUSION EQUATION WITH STREAMING FOR THREE BASIC TWO MEDIUM GEOMETRIES

D. W. Whitcombe[1] and Nicholas M. Smith, Jr.

## INTRODUCTION

The need has long been recognized for a report containing the solution to the elementary diffusion equation (more properly called the Helmholtz equation), $\nabla^2\varphi - k^2\varphi = 0$, for various two medium geometries where some of the boundaries are not perpendicular to the diffusion current, i.e. where the boundary is not co-incident with an equi-flux surface. When this more general condition exists there is a net current parallel as well as perpendicular to the boundary; and this condition is designated as "streaming". This report presents many solutions of this type for three different basic geometries encountered in practice. Although there are several other interesting geometries which could be studied, among them the elliptic cylinder and the rectangular cylinder, the three chosen should be sufficient to obtain an approximate answer to a general problem in this class.

The boundary conditions at the interface between the two media require continuity in flux and in the normal component of the current. The source of neutrons (say) is plane and uniform, either finite or infinite in extent. The constant current leaving the source is designated by $n_0$, and is negative. All $\lambda$'s in the report are transport mean-free-paths; the k is the reciprocal of the diffusion length.

---

[1] On loan from the Fairchild Engine & Airplane Corp., NEPA Project.

The method of separation of variables and the theorems of Fourier series and the Fourier integral were used to solve the partial differential equations occurring here. When one has solved a problem in complete detail and analyzed the solutions obtained, he readily develops an intuition that will enable him to write down a solution with undetermined coefficients almost at once for a given problem. This intuitive approach is used to some extent in this report.

The authors wish to express their appreciation to Willard Bouricius for his critical reading of the manuscript and his many helpful suggestions.

The solutions presented in this report:[2]


| | Page |
|---|---|
| I. Two mediums with one boundary with a plane source. | |
| A) Infinite in the x - direction. | 5 |
| B) Finite in the x - direction | 13 |
| II. Two mediums with two boundaries | |
| A) Infinite in the x - direction | 24 |
| 1) Infinite plane source | |
| 2) Finite plane source | |
| B) Finite in the x - direction | |
| 1) Infinite plane source | 27 |
| 2) Finite plane source | 29 |
| C) Bare Case | |
| 1) Infinite in x - direction | 32 |
| 2) Finite in x - direction | 33 |


[2] Any section in this report that is referred to with a primed letter as I-B' indicates a more accurate although more complicated solution to the finite problem under discussion.

Page

III. Two mediums with cylindrical geometry as in Fig. 3

A) Infinite plane source and media infinite in z - direction 34

B) Infinite plane source and media finite in z - direction 40

C-1) III A with finite plane source 44

C-2) III B with finite plane source 45

D) Bare case

1) Medium infinite in z - direction 46

2) Medium finite in z - direction 47

## I. Solution of the two medium problem with one boundary

The geometry is shown in Fig. 1A

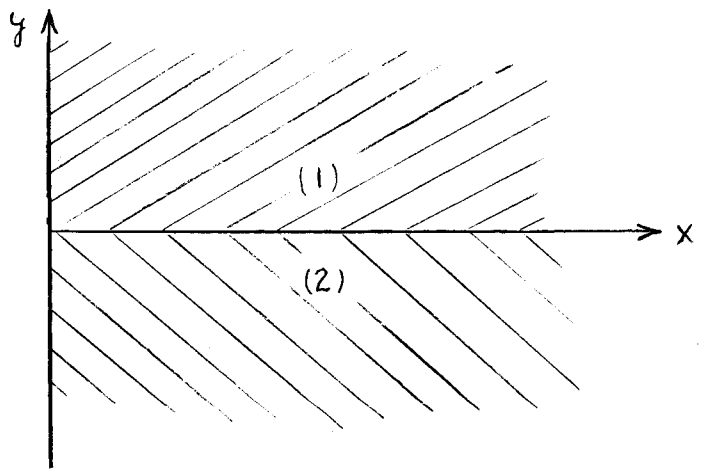


### A. Infinite in the x - direction

The differential equations and boundary conditions for the case that is infinite in length are the following:

(1) $\varphi_{xx} + \varphi_{yy} - k_1^2 \varphi = 0$ $(y \geq 0,\ x \geq 0)$

(2) $\varphi_{xx} + \varphi_{yy} - k_2^2 \varphi = 0$ $(y \leq 0,\ x \geq 0)$

(3) $\lim_{y \to \pm\infty} \varphi(x,y) = \text{finite}$ $(x \geq 0)$

(4) $\lim_{x \to +\infty} \varphi(x,y) = 0$ $(-\infty < y < \infty)$

(5) $\varphi_x(0,y) = n_o$, a constant $(-\infty < y < \infty)$

(6) $\varphi(x, 0+) = \varphi(x, 0-)$ $(x \geq 0)$

(7) $\lambda_1 \varphi_y(x, 0+) = \lambda_2 \varphi_y(x, 0-)$ $(x \geq 0)$

To solve this problem let us assume that the variables separate, i.e.

$$\varphi = X\,Y$$

Substitute in equation (1) where $y \geq 0$, divide through by X Y to get

$$\frac{X''}{X} + \frac{Y''}{Y} - k_1^2 = 0 \qquad (y \geq 0,\ x \geq 0)$$

or

$$-\frac{X''}{X} = \frac{Y''}{Y} - k_1^2 = \alpha^2 \quad \text{or} \quad -\beta^2$$

where $\alpha^2$ and $\beta^2$ are independent of x and y and are therefore constants. Further, these constants are real since X and Y are real functions.

That is, $\alpha^2$ is restricted to the positive real axis, and $-\beta^2$ to the negative real axis. This device is adopted to permit more simple notation in equations to follow.

We may then write

$$(8)\quad \begin{cases} X'' + \alpha^2 X = 0 & (x \geq 0) \\ Y'' - (k_1^2 + \alpha^2)\, Y = 0 & (y \geq 0) \end{cases}$$

and

$$(9)\quad \begin{cases} X'' - \beta^2 X = 0 & (x \geq 0) \\ Y'' - (k_1^2 - \beta^2) Y = 0 & (y \geq 0) \end{cases}$$

The solutions to (8) are

$$X = A_\alpha \cos \alpha x + B_\alpha \sin \alpha x \qquad (x \geq 0)$$

$$Y = C_\alpha e^{-\sqrt{k_1^2 + \alpha^2}\, y} + D_\alpha e^{\sqrt{k_1^2 + \alpha^2}\, y} \qquad (y \geq 0)$$

The solutions to (9) are

$$X = E_\beta e^{-\beta x} + F_\beta e^{\beta x} \qquad (x \geq 0)$$

$$Y = G_\beta e^{-\sqrt{k_1^2 - \beta^2}\, y} + H_\beta e^{+\sqrt{k_1^2 - \beta^2}\, y} \qquad (y \geq 0,\ \beta^2 < k_1^2)$$

$$= I_\beta \cos\sqrt{\beta^2 - k_1^2}\, y + J_\beta \sin\sqrt{\beta^2 - k_1^2}\, y \qquad (y \geq 0,\ \beta^2 > k_1^2)$$

$$= L y + M \qquad (y \geq 0, |\beta| = k_1)$$

Since these are solutions for every $\alpha$ and every $\beta$ the sum of all such solutions is a solution. We then have the integral solution for $y \geq 0$.

$$\varphi = \int_{-\infty}^{\infty} (A_\alpha \cos \alpha x + B_\alpha \sin \alpha x)(C_\alpha e^{-\sqrt{k_1^2 + \alpha^2}\, y} + D_\alpha e^{\sqrt{k_1^2 + \alpha^2}\, y}) d\alpha$$

$$+ \int_{-k_1}^{k_1} (E_\beta e^{-\beta x} + F_\beta e^{\beta x})(G_\beta e^{-\sqrt{k_1^2 - \beta^2}\, y} + H_\beta e^{\sqrt{k_1^2 - \beta^2}\, y}) d\beta$$

$$(10) \quad + \int_{k_1}^{\infty} \text{and} \int_{-\infty}^{-k_1} (E_\beta e^{-\beta x} + F_\beta e^{\beta x})(I_\beta \cos\sqrt{\beta^2 - k_1^2}\, y + J_\beta \sin\sqrt{\beta^2 - k_1^2}\, y) d\beta$$

$$+ (E_{k_1} e^{-k_1 x} + F_{k_1} e^{k_1 x})(Ly + M)$$

From the boundary conditions we may say

$$H_\beta, D_\alpha, L = 0 \qquad \text{by (3)}$$

$$F_\beta = 0 \qquad \text{by (4)}$$

Then we have

$$\varphi = \int_{-\infty}^{\infty} (A_\alpha \cos \alpha x + B_\alpha \sin \alpha x) C_\alpha e^{-\sqrt{k_1^2 + \alpha^2}\, y} d\alpha$$

$$+ \int_{-k_1}^{k_1} G_\beta E_\beta e^{-\beta x} e^{-\sqrt{k_1^2 - \beta^2}\, y} d\beta$$

$$(11) \quad + \int_{k_1}^{\infty} \text{and} \int_{-\infty}^{-k_1} E_\beta e^{-\beta x} (I_\beta \cos\sqrt{\beta^2 - k_1^2}\, y + J_\beta \sin\sqrt{\beta^2 - k_1^2}\, y) d\beta$$

$$+ E_{k_1} M e^{-k_1 x}$$

Now

$$\varphi_x = \int_{-\infty}^{\infty} (-\alpha A_\alpha \sin \alpha x + \alpha B_\alpha \cos \alpha x)\, C_\alpha\, e^{-\sqrt{k_1^2+\alpha^2}\,y}\, d\alpha$$

$$+ \int_{-k_1}^{k_1} - G_\beta E_\beta \beta e^{-\beta x} e^{-\sqrt{k_1^2-\beta^2}\,y}\, d\beta$$

$$+ \int_{k_1}^{\infty} \text{and} \int_{-\infty}^{-k_1} - E_\beta \beta e^{-\beta x} (I_\beta \cos \sqrt{\beta^2 - k_1^2}\, y + J_\beta \sin \sqrt{\beta^2 - k_1^2}\, y)\, d\beta$$

$$- E_{k_1} M k_1 e^{-k_1 x}$$

And from (5) we have

$$n_o = \int_{-\infty}^{\infty} \alpha B_\alpha C_\alpha e^{-\sqrt{k_1^2+\alpha^2}\,y}\, d\alpha + \int_{-k_1}^{k_1} - G_\beta E_\beta \beta e^{-\sqrt{k_1^2-\beta^2}\,y}\, d\beta$$

$$+ \int_{k_1}^{\infty} \text{and} \int_{-\infty}^{-k_1} - E_\beta \beta (I_\beta \cos \sqrt{\beta^2 - k_1^2}\, y + J_\beta \sin \sqrt{\beta^2 - k_1^2}\, y)\, d\beta$$

$$- E_{k_1} M k_1$$

Since the left member is a constant the y-derivitive of the right member must vanish, or when $y \geq 0$

$$0 = \int_{-\infty}^{\infty} -\alpha B_\alpha C_\alpha \sqrt{k_1^2+\alpha^2}\, e^{-\sqrt{k_1^2+\alpha^2}\,y}\, d\alpha$$

$$+ \int_{-k_1}^{k_1} + G_\beta E_\beta \beta \sqrt{k_1^2-\beta^2}\, e^{-\sqrt{k_1^2-\beta^2}\,y}\, d\beta$$

$$+ \int_{k_1}^{\infty} \text{and} \int_{-\infty}^{-k_1} - E_\beta \beta \left( - I_\beta \sqrt{\beta^2-k_1^2} \sin\sqrt{\beta^2-k_1^2}\,y + J_\beta \sqrt{\beta^2-k_1^2} \cos\sqrt{\beta^2-k_1^2}\,y\right) d\beta$$

The above identity must be satisfied by a proper choice of coefficients. If $E_\beta = 0$ and $B_\alpha C_\alpha$ is odd the above requirements are met. Then (11) becomes

$$\varphi = E_{k_1} M e^{-k_1 x} + \int_{-\infty}^{\infty} (A_\alpha \cos \alpha x + B_\alpha \sin \alpha x) C_\alpha e^{-\sqrt{k_1^2+\alpha^2}\,y}\, d\alpha \qquad (y \geq 0)$$

But if $B_\alpha C_\alpha$ is odd then the integral of the sine function vanishes and we have (12) with the constants renamed.

$$(12) \quad \varphi = B^{(1)} e^{-k_1 x} + \int_{-\infty}^{\infty} A^{(1)}(\alpha) \cos \alpha x\, e^{-\sqrt{k_1^2+\alpha^2}\,y}\, d\alpha \qquad (y \geq 0)$$

similarly

$$(13) \quad \varphi = B^{(2)} e^{-k_2 x} + \int_{-\infty}^{\infty} A^{(2)}(\alpha) \cos \alpha x\, e^{-\sqrt{k_2^2+\alpha^2}\,y}\, d\alpha \qquad (y \leq 0)$$

An examination of these solutions will enable one to develop an intuition that will be useful in more complicated problems. The $B^{(i)} e^{-k_i x}$ would be

the solution if only one medium were present. The integral specifies the streaming between the two media. An intuition of this sort is desirable because it enables one to write down the solutions immediately. This procedure may be used in the following more complicated problems. It is successful if one can determine the coefficients under the integral sign. Let us now evaluate the coefficients.

From (5) we find that

$$B^{(1)} = -\frac{n_o}{k_1}, \qquad B^{(2)} = -\frac{n_o}{k_2}$$

Then (6) and (7) give the following two simultaneous equations:

$$\int_{-\infty}^{\infty} \left[A^{(1)}(\alpha) - A^{(2)}(\alpha)\right] \cos \alpha x \, d\alpha = \frac{n_o}{k_1} e^{-k_1 x} - \frac{n_o}{k_2} e^{-k_2 x}$$

and

$$\int_{-\infty}^{\infty} \left(A^{(1)}(\alpha) \lambda_1 \sqrt{k_1^2+\alpha^2} + A^{(2)}(\alpha) \lambda_2 \sqrt{k_2^2+\alpha^2}\right) \cos \alpha x \, dx = 0$$

Then using the Fourier integral theorem we obtain

$$A^{(1)}(\alpha) - A^{(2)}(\alpha) = \frac{n_o}{\pi} \frac{1}{k_1^2+\alpha^2} - \frac{n_o}{\pi} \frac{1}{k_2^2+\alpha^2} \equiv g, \text{ say.}$$

$$A^{(1)}(\alpha) \lambda_1 \sqrt{k_1^2+\alpha^2} + A^{(2)}(\alpha) \lambda_2 \sqrt{k_2^2+\alpha^2} = 0$$

Solving these we get

$$(14)\quad A^{(1)}(\alpha) = \frac{g\,\lambda_2\sqrt{k_1^2+\alpha^2}}{\lambda_2\sqrt{k_2^2+\alpha^2}+\lambda_1\sqrt{k^2+\alpha^2}}$$

$$(15)\quad A^{(2)}(\alpha) = \frac{-g\,\lambda_1\sqrt{k_1^2+\alpha^2}}{\lambda_2\sqrt{k_2^2+\alpha^2}+\lambda_1\sqrt{k_1^2+\alpha^2}}$$

Substituting the values for the coefficients into (12) and (13) we obtain

$$(16)\quad \varphi = -\frac{n_o}{k_1}e^{-k_1x} + \frac{n_o\lambda_2}{\pi}\int_{-\infty}^{\infty} F(\alpha)\sqrt{k_2^2+\alpha^2}\cos\alpha x\, e^{-\sqrt{k_1^2+\alpha^2}\,y}\,d\alpha \qquad (y \geq 0)$$

$$(17)\quad \varphi = -\frac{n_o}{k_2}e^{-k_2x} - \frac{n_o\lambda_1}{\pi}\int_{-\infty}^{\infty} F(\alpha)\sqrt{k_1^2+\alpha^2}\cos\alpha x\, e^{\sqrt{k_1^2+\alpha^2}\,y}\,d\alpha \qquad (y \leq 0)$$

where $F(\alpha) = \left[\frac{1}{k_1^2+\alpha^2} - \frac{1}{k_2^2+\alpha^2}\right]\frac{1}{\lambda_2\sqrt{k_2^2+\alpha^2}+\lambda_1\sqrt{k_1^2+\alpha^2}}$

The solutions (16) and (17) may be simplified further. Since the integrand is even in $\alpha$, the integral from $-\infty$ to $+\infty$ may be replaced by twice the integral from 0 to $\infty$.

The results in (16) and (17) have been arrived at only formally. One should now check them to be certain that they satisfy the differential equation and all the boundary conditions. This may be down in a few minutes for the above solution and is indeed actually the case.

I B. <u>Finite in the x-direction</u>

If the length in the above problem should be finite in the x-direction, as in Fig. 1B then we would use the extrapolation length and the boundary

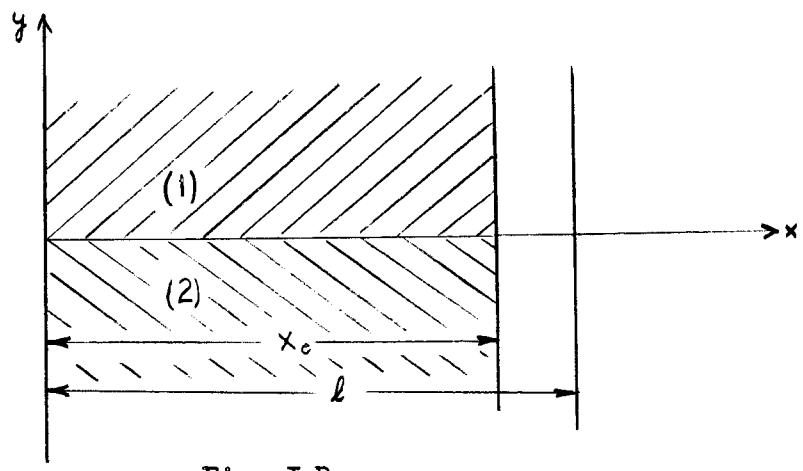


Fig. I-B

condition that

(18) $$\varphi(\ell, y) = 0,$$

where $\ell$ is the extrapolation length. Because the flux will be small on the far boundary, it is possible to approximate $\ell$ by analogy with the one-dimensional problem*. If we define an average transport mean-free-path, $\lambda'$, as

$$\lambda' = \frac{\lambda_1 + \lambda_2}{2}$$

* G. Placzek, Phys. Rev. 72, 556 (1947).

the approximation would not be good in the case when one of the media was a much better absorber than the other. A better definition of the average transport mean-free-path, $\lambda$, that considers this variation in absorption would be

$$\lambda = \frac{k_2 \lambda_1 + k_1 \lambda_2}{k_2 + k_1} .$$

The extrapolation length would then be

$$\ell = x_0 + .7104 \lambda , \tag{19}$$

the constant being derived in the reference. As an example, consider the case where medium (1) is air; then $k_1$ would be very large and $\ell$ would be

$$\ell = x_0 + .7104 \lambda_2 ,$$

which is reasonable.

The condition (18) then replaces condition (4). A simple modification of the work done above in I-A will result in the desired solution. If $\cos \alpha x$ is to be zero when $z = \ell$ and still vanish when we find the z-derivitive then we must use

$$\alpha = (n + \tfrac{1}{2}) \frac{\pi}{\ell} , \tag{20}$$

where n is any positive or negative integer. Then the integral collapses to a series since it has discrete values only at a countable number of points. The solution to the one dimensional finite problem (i.e.) without a second medium, hence no streaming, would be

$$\varphi(x) = -\frac{n_o}{k} \quad \frac{\mathrm{sh}(\ell - x)k}{\mathrm{ch}\, k\ell} \quad , \qquad (0 \leq x \leq \ell)$$

since it satisfies the one-dimensional differential equation and $\varphi_x = n_o$, $\varphi(\ell) = 0$. The hyperbolic sine and cosine are abbreviated by sh and ch. The solution to this new problem may then be written as

$$(21) \quad \varphi = -\frac{n_o}{k_1} \frac{\mathrm{sh}(\ell - x)k_1}{\mathrm{ch}\, k_1 \ell} + \sum_{-\infty}^{\infty} A_n^{(1)} \cos \alpha x \, e^{-\sqrt{\alpha^2 + k_1^2}\, y} \qquad (y \geq 0)$$

and

$$(22) \quad \varphi = -\frac{n_o}{k_2} \frac{\mathrm{sh}(\ell - x)k_2}{\mathrm{ch}\, k_2 \ell} + \sum_{-\infty}^{\infty} A_n^{(2)} \cos \alpha x \, e^{\sqrt{\alpha^2 + k_2^2}\, y} \qquad (y \leq 0)$$

where $\alpha$ is defined in (20). The $A_n^{(1)}$ and $A_n^{(2)}$ are determined using the boundary conditions (6) and (7) as before. Write them as

$$(23) \quad \sum_{-\infty}^{\infty} (A_n^{(1)} - A_n^{(2)}) \cos \alpha x = \frac{n_o}{k_1} \frac{\mathrm{sh}(\ell - x)k_1}{\mathrm{ch}\, k_1 \ell} - \frac{n_o}{k_2} \frac{\mathrm{sh}(\ell - x)k_2}{\mathrm{ch}\, k_2 \ell}$$

$$(24) \quad \sum_{-\infty}^{\infty} (A_n^{(1)} \lambda_1 \sqrt{\alpha^2 + k_1^2} + A_n^{(2)} \lambda_2 \sqrt{\alpha^2 - k_2^2}) \cos \alpha x = 0$$

Using the orthogonality of the Fourier series, we obtain

$$(23A) \quad A_n^{(1)} - A_n^{(2)} = \frac{n_o}{\ell} \int_0^{\ell} \left[ \frac{\mathrm{sh}(\ell - x)k_1}{k_1\, \mathrm{ch}\, k_1 \ell} - \frac{\mathrm{sh}(\ell - x)k_2}{k_2\, \mathrm{ch}\, k_2 \ell} \right] \cos \alpha x \, d\alpha$$

The integration here is facilitated if one notes that the integral is in convolution form. It may then be integrated using the Laplace transform, indicated by the operator, L. Using the theory of the Laplace transform we find

$$L\left\{\int_0^{\ell} \frac{\mathrm{sh}(\ell - x)k_1}{k_1 \,\mathrm{ch}\, k_1 \ell} \cos \alpha x \, dx\right\} = \frac{1}{k_1 \,\mathrm{ch}\, k_1 \ell} \quad \frac{k_1}{s^2 - k_1^2} \quad \frac{s}{s^2 + \alpha^2}$$

The inverse Laplace transform of this expression is found in tables* to be

$$\frac{1}{\mathrm{ch}\, k_1 \ell}\left[\frac{\mathrm{ch}\, k_1 \ell - \cos \alpha \ell}{\alpha^2 + k_1^2}\right] = \frac{1}{\alpha^2 + k_1^2} \qquad \text{since } \cos \alpha \ell = 0$$

Hence (23A) becomes

$$(25) \qquad A_n^{(1)} - A_n^{(2)} = \frac{n_0}{\ell}\left[\frac{1}{\alpha^2 + k_1^2} - \frac{1}{\alpha^2 + k_2^2}\right] = g, \text{ say}$$

and

$$(26) \qquad A_n^{(1)} \lambda_1 \sqrt{\alpha^2 + k_1^2} + A_n^{(2)} \lambda_2 \sqrt{\alpha^2 + k_2^2} = 0$$

Solving (25) and (26) simultaneously we obtain

$$(27) \qquad A_n^{(1)} = \frac{\lambda_2 \, g \sqrt{\alpha^2 + k_2^2}}{\lambda_1 \sqrt{\alpha^2 + k_1^2} + \lambda_2 \sqrt{\alpha^2 + k_2^2}}$$

---

* R. V. Churchill, Modern Operational Mathematics in Engineering, McGraw-Hill, 1944.

and

$$A_n^{(2)} = \frac{-\lambda_1 g\sqrt{\alpha^2 + k_1^2}}{\lambda_1\sqrt{\alpha^2 + k_1^2} + \lambda_2\sqrt{\alpha^2 + k_2^2}} \tag{28}$$

Substituting these back into (21) and (22) we obtain the solution to the finite problem.

When $y \geq 0$

$$\varphi = -\frac{n_o}{k_1}\,\frac{\mathrm{sh}(\ell - x)k_1}{\mathrm{ch}\,\ell\,k_1} + \frac{n_o\lambda_2}{\ell}\sum_{-\infty}^{\infty}\left[\frac{1}{\alpha^2 + k_1^2} - \frac{1}{\alpha^2 + k_2^2}\right]\frac{\sqrt{\alpha^2 + k_2^2}\cos\alpha x\, e^{-\sqrt{\alpha^2 + k_1^2}\,y}}{\lambda_1\sqrt{\alpha^2 + k_1^2} + \lambda_2\sqrt{\alpha^2 + k_2^2}} \tag{29}$$

when $y \leq 0$

$$\varphi = -\frac{n_o}{k_2}\,\frac{\mathrm{sh}(\ell - x)k}{\mathrm{ch}\,k_2\ell} + \frac{n_o\lambda_1}{\ell}\sum_{-\infty}^{\infty}\left[\frac{1}{\alpha^2 + k_1^2} - \frac{1}{\alpha^2 + k_2^2}\right]\frac{\sqrt{\alpha^2 + k_1^2}\cos\alpha x\, e^{-\sqrt{\alpha^2 + k_2^2}\,y}}{\lambda_1\sqrt{\alpha^2 + k_1^2} + \lambda_2\sqrt{\alpha^2 + k_2^2}} \tag{30}$$

There is again a symmetry which allows replacing $\sum_{-\infty}^{\infty}$ by $2\sum_{0}^{\infty}$. The series should converge rapidly; probably several terms will be adequate.

The methods used above in I-B for the finite case involves an extrapolation length approximation that is perhaps a poor one when x approaches $x_o$. A more exact scheme is suggested by an examination of the derivation of the extrapolation length. The return neutron current is given by elementary diffusion theory to be

$$(31) \qquad J_+ = \frac{\varphi}{4} + \frac{\lambda_t}{6} \varphi_x + \text{terms involving higher derivatives.}$$

At the boundary this return current must vanish. Disregarding the terms in the higher derivatives negligible, the well known condition is derived

$$(32) \qquad \frac{\varphi}{\varphi_x} = -\frac{2}{3} \lambda_t .$$

In the more accurate transport theory the $\frac{2}{3}$ was replaced by .7104.

The problem is now solved by applying (31) directly rather than using the modified version of (32) as in I-B.

The statement of the problem is the same as in I-B except that $\varphi(\ell, y) = 0$ becomes

$$(33) \qquad \varphi(x_o, y) = -\frac{2}{3} \lambda_i \varphi_x(x_o, y) \qquad (i = 1, y \geq 0;\ i = 2, y \leq 0)$$

which is medium dependent. This is a better approximation for values of x near $x_o$ since when y is large and positive the extrapolation length should depend on $\lambda_2$ and when y is small the extrapolation length will be some complicated function of $\lambda_1$ and $\lambda_2$. The present theory will do this and will be better than choosing

a single average of $\lambda_1$ and $\lambda_2$ that is expected to hold for all values of y. Proceeding as before the solution is written with undetermined coefficients in medium (1) where $y \geq 0$ as

$$(34) \quad \varphi = A\ \mathrm{sh}(x_o - x)k_1 + B\ \mathrm{ch}(x_o - x)k_1 + \sum_{-\infty}^{\infty} \left[C(\alpha)\cos\alpha x + D(\alpha)\sin\alpha x\right] e^{-\sqrt{\alpha^2 + k_1^2}\, y}$$

where $\alpha(n) = \frac{n\pi}{x_o}$. Then

$$(34A) \quad \varphi_x = -A\ k_1\ \mathrm{ch}(x_o - x)k_1 - B\ k_1\ \mathrm{sh}(x_o - x)k_1 + \sum_{-\infty}^{\infty} \left[-C(\alpha)\,\alpha\sin\alpha x + \alpha\, D(\alpha)\cos\alpha x\right] e^{-\sqrt{\alpha^2 + k_1^2}\, y}$$

when $x = 0$, $\varphi_x(0) - n_o$ hence

$$(35) \quad n_o = -A\ k_1\ \mathrm{ch}\ x_o\ k_1 - B\ k_1\ \mathrm{sh}\ x_o\ k_1 + \sum_{-\infty}^{\infty} \alpha\, D(\alpha)\ e^{-\sqrt{\alpha^2 + k_1^2}\, y}$$

From (33) there results

$$(36) \quad B + \sum_{-\infty}^{\infty} \left[C(\alpha)\cos\alpha x_o + D(\alpha)\sin\alpha x\right] e^{-\sqrt{\alpha^2 + k_1^2}\, y}$$

$$= -\frac{2}{3}\lambda_1 \left[-A\ k_1 + \sum_{-\infty}^{\infty} \left(-C(\alpha)\,\alpha\sin\alpha x + \alpha\, D(\alpha)\cos\alpha x\right) e^{-\sqrt{\alpha^2 + k_1^2}\, y}\right.$$

Equations (35) and (36) are now to be satisfied by a proper choice of A, B, $C(\alpha)$, $D(\alpha)$ and $\alpha$. It is seen from (35) that the sum must vanish because of the y-dependence. This may be done by choosing $D(\alpha)$ an even function. When this is done it is noticed that the second sum in (34) vanishes so there is no loss of generality in assuming $D(\alpha) = 0$. Similarly the sums in (36) must vanish. This is accomplished by choosing $C(\alpha)$ to be an even function, when $\alpha = n\pi/x_o$.

A and B may then be determined from (35) and (36) written with the sums absent as

(37) $$n_o = - A\, k_1 \operatorname{ch} x_o k_1 - B\, k_1 \operatorname{sh} x_o k_1$$

(38) $$B = + \frac{2}{3} \lambda_1 A\, k_1$$

These have solutions

(39) $$A = - \frac{n_o}{k_1} \frac{1}{\operatorname{ch} x_o k_1 + a_1 \operatorname{sh} x_o k_1}$$

(40) $$B = - \frac{n_o}{k_1} \frac{a_1}{\operatorname{ch} x_o k_1 + a_1 \operatorname{sh} x_o k_1}$$

where $a_1 = \frac{2}{3} \lambda_1 k_1$ from diffusion theory

(41) $= .7104\, \lambda_1 k_1$ from the more accurate transport theory.

By defining $\Phi_1$:

$$(42) \qquad \Phi_1 = -\frac{n_o}{k_1}\left[\frac{\mathrm{sh}(x_o - x)k_1 + a_1\mathrm{ch}(x_o - x)k_1}{\mathrm{ch}\, x_o\, k_1 + a_1\, \mathrm{sh}\, x_o\, k}\right]$$

and similarly, $\Phi_2$, the solutions result in the form:

$$(43) \qquad \varphi = \Phi_1 + \sum_{-\infty}^{\infty} A_n^{(1)} \cos \alpha x\, e^{-\sqrt{\alpha^2 + k_1^2}\, y} \qquad (y \geq 0)$$

and

$$(44) \qquad \varphi = \Phi_2 + \sum_{-\infty}^{\infty} A_n^{(2)} \cos \alpha x\, e^{+\sqrt{\alpha^2 + k_2^2}\, y} \qquad (y \leq 0)$$

where $\alpha = \frac{n\pi}{x_o}$. The coefficients have been renamed to coincide with the notation of I-B. Note that $\Phi_1$ would be the solution if the medium were all (1) and $\Phi_2$ would be the solution if the medium were all (2); the series represents the streaming. This bears out the intuition developed in the report.

There remains now the evaluation of the even functions $A_n^{(1)}$ and $A_n^{(2)}$ such that the boundary conditions I-A-(36) and -(37) can be matched. These give

$$(45) \qquad \sum_{-\infty}^{\infty} (A_n^{(1)} - A_n^{(2)}) \cos \alpha x = -\Phi_1 + \Phi_2$$

and

$$(46) \qquad \sum_{-\infty}^{\infty} (\lambda_1 \sqrt{\alpha^2 + k_1^2}\; A_n^{(1)} + \lambda_2 \sqrt{\alpha^2 + k_2^2}\; A_n^{(2)}) \cos \alpha x = 0$$

or
$$\lambda_1 \sqrt{\alpha^2 + k_1^2}\; A_n^{(1)} + \lambda_2 \sqrt{\alpha^2 + k_2^2}\; A_n^{(2)} = 0$$

and

(47)
$$A_n^{(1)} - A_n^{(2)} = \frac{1}{x_o} \int_o^{x_o} \left[ - \Phi_1 + \Phi_2 \right] \cos \alpha x \, dx$$

To perform this integration we need determine

(48A)
$$\int_o^{x_o} \mathrm{ch}(x_o - x) k \cos \alpha x \, dx \equiv I, \text{ say}$$

Again using Laplace transforms we have

$$L\left\{ I \right\} = L\left\{ \mathrm{ch}\, k\, x_o^* \cos \alpha\, x_o \right\}$$

$$= \frac{s}{s^2 - k^2} \; \frac{s}{s^2 + \alpha^2}$$

$$= \frac{k^2}{k^2 + \alpha^2} \; \frac{1}{s^2 - k^2} + \frac{\alpha^2}{\alpha^2 + k^2} \cdot \frac{1}{s^2 + \alpha^2}$$

so

(48B)
$$I = \frac{k}{k^2 + \alpha^2} \; \mathrm{sh}\, x_o\, k$$

and from p. 1 we have

$$(49) \qquad \int_0^{x_o} \mathrm{sh}(x_o - x)k \cos \alpha x \, dx = \frac{k\left[\mathrm{ch}\, k\, x_o + (-1)^{n+1}\right]}{\alpha^2 + k^2}$$

since $\alpha = \frac{n\pi}{x_o}$

If we substitute the results of (48) and (49) into (47) we obtain

$$A_n^{(1)} - A_n^{(2)} = \frac{1}{x_o}\left[\frac{n_o}{k_1} \frac{\dfrac{k_1 \ \mathrm{ch}\, k_1 x_o + (-1)^{n+1}}{\alpha^2 + k_1^2} + a_1 \dfrac{k_1 \ \mathrm{sh}\, x_o k_1}{k_1^2 + \alpha^2}}{\mathrm{ch}\, x_o k_1 + a_1 \ \mathrm{sh}\, x_o k_1}\right]$$

$$- \left[\text{same expression with the subscript changed to (2)}\right]$$

$$(50) \qquad = \frac{n_o}{x_o} \frac{1}{\alpha^2 + k_1^2}\left[1 + \frac{(-1)^{n+1}}{\mathrm{ch}\, x_o k_1 + a_1 \ \mathrm{sh}\, x_o k_1}\right]$$

$$- \left[\text{same expression with the subscript changed to (2)}\right]$$

$$= g, \text{ say.}$$

These are in the same form as equations I-B-(25) and -(26) p. 14. Hence $A_n^{(1)}$ $A_n^{(2)}$ are given by I-B-(27) and -(28) where the above g is indicated and $\alpha = \frac{n\pi}{x_o}$. The solution is then obtained by substituting for $A_n^{(1)}$ and $A_n^{(2)}$ in (43) and (44) of this appendix.

II. <u>The two medium problem with two boundaries:</u>

The geometry is infinite in the z-direction as in the problem above. It is pictured below in Fig. II-A.

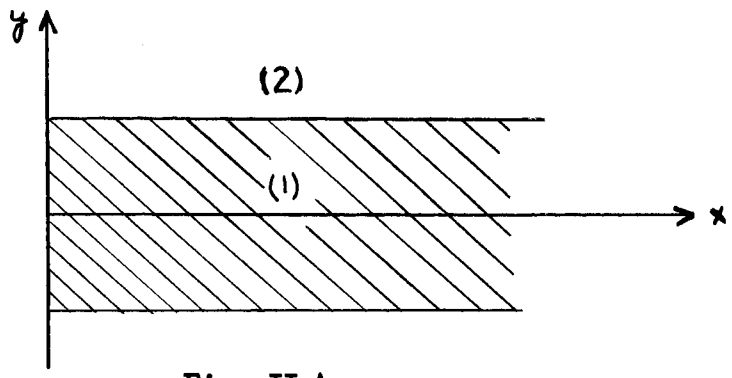


Fig. II-A

The problem is solved with the variations stated in the introduction.

A-1. <u>Infinite in the x-direction; infinite plane source:</u>

Solve the following problems and boundary conditions.

(1) $\varphi_{xx} + \varphi_{yy} - k_1^2 \varphi = 0$ $\quad (x \geq 0, -y_0 \leq y \leq y_0)$

(2) $\varphi_{xx} + \varphi_{yy} - k_2^2 \varphi = 0$ $\quad (x \geq 0, y \geq y_0)$

(3) $\varphi_x (0, y) = n_0$ $\quad (-\infty < y < \infty)$

(4) $\varphi(x,y) = \varphi(x,-y)$ $\quad (-y_0 \leq y \leq y_0)$ .

(5) $\lim_{y \to \infty} \varphi(x,y) = 0$ $\quad (y \geq 0)$

(6) $\lim_{y \to \infty} \varphi(x,y) = \text{finite}$ $(x \geq 0)$

(7) $\varphi(x, y_o-) = \varphi(x, y_o+)$ $(x \geq 0)$

(8) $\lambda_1 \varphi_y (x, y_o-) = \lambda_2 \varphi_y (x, y_o+)$ $(x \geq 0)$

Benefitting from the intuition developed in section I, we may guess the solutions as

(9) $\varphi = -\frac{n_o}{k_1} e^{-k_1 x} + \int_{-\infty}^{\infty} A(\alpha) \cos \alpha x \, ch(\sqrt{\alpha^2 + k_1^2}\, y) d\alpha$ $(-y \leq y_o \leq y)$

(10) $\varphi = -\frac{n_o}{k_2} e^{-k_2 x} + \int_{-\infty}^{\infty} B(\alpha) \cos \alpha x \, e^{-\sqrt{\alpha^2 + k_2^2}\, y} d\alpha$ $(y \geq y_o)$

The $\cos \alpha x$ in the integrand is chosen so that the x-derivitive of the integrand will vanish. The y-factors in the integrand are chosen from the class of exponential functions to satisfy the symmetry condition in (4) and the finite condition in (6). The abreviations ch and sh are used for the hyperbolic cosine and sine. $A(\alpha)$ and $B(\alpha)$ are determined using the Fourier theorem as before. Boundary conditions (7) and (8) then give the following two simultaneous conditions.

(11) $$\int_{-\infty}^{\infty} (A(\alpha)\, ch\sqrt{\alpha^2 + k_1^2}\, y_o - B(\alpha)\, e^{-\sqrt{\alpha^2 + k_2^2}\, y_o}) \cos \alpha x \, d\alpha = + \frac{n_o}{k_1} e^{-k_1 x} - \frac{n_o}{k_2} e^{-k_2 x}$$

and

$$(12)\quad \int_{-\infty}^{\infty} \left\{ A(\alpha)\,\lambda_1\sqrt{\alpha^2+k_1^2}\,\mathrm{sh}\sqrt{\alpha^2+k_1^2}\,y_o + B(\alpha)\,\lambda_2\sqrt{\alpha^2+k_2^2}\,e^{-\sqrt{\alpha^2+k_2^2}\,y_o} \right\} \cos\alpha x\, d\alpha = 0$$

Using the Fourier integral these reduce to

$$(13)\quad A(\alpha)\,\mathrm{ch}\sqrt{\alpha^2+k_1^2}\,y_o - B(\alpha)\,e^{-\sqrt{\alpha^2+k_2^2}\,y_o} = \frac{n_o}{\pi}\,\frac{1}{k_1^2+\alpha^2} - \frac{n_o}{\pi}\,\frac{1}{k_2^2+\alpha^2} = g, \text{ say.}$$

and

$$(14)\quad A(\alpha)\,\lambda_1\sqrt{\alpha^2+k_1^2}\,\mathrm{sh}\sqrt{\alpha^2+k_1^2}\,y_o + B(\alpha)\,\lambda_2\sqrt{\alpha^2+k_2^2}\,e^{-\sqrt{\alpha^2+k_2^2}\,y_o} = 0$$

Solving these we get

$$(15)\quad A(\alpha) = \frac{\lambda_2\sqrt{\alpha^2+k_2^2}\,g}{\lambda_2\sqrt{\alpha^2+k_2^2}\,\mathrm{ch}\sqrt{\alpha^2+k_1^2}\,y_o + \lambda_1\sqrt{\alpha^2+k_1^2}\,\mathrm{sh}\sqrt{\alpha^2+k_1^2}\,y_o}$$

$$(16)\quad B(\alpha) = \frac{+\,\lambda_1\sqrt{\alpha^2+k_1^2}\,\mathrm{sh}\sqrt{\alpha^2+k_1^2}\,y_o\,g\,e^{+\sqrt{\alpha^2+k_2^2}\,y_o}}{\lambda_2\sqrt{\alpha^2+k_2^2}\,\mathrm{ch}\sqrt{\alpha^2+k_1^2}\,y_o + \lambda_1\sqrt{\alpha^2+k_1^2}\,\mathrm{sh}\sqrt{\alpha^2+k_1^2}\,y_o}$$

These results should be substituted into equations (9) and (10) to give the solution to problem II-A-1.

II-A-2. Finite plane source

If the above problem (II-A-1) be modified so that the plane source is into medium (1) only, the solution has the form

$$(17)\quad \varphi = -\frac{n_o}{k_1} e^{-k_1 x} - \int_{-\infty}^{\infty} A(\alpha) \cos \alpha x \operatorname{ch} \left(\sqrt{\alpha^2 + k_1^2}\, y\right) d\alpha \qquad (-y_o \leq y \leq y_o)$$

$$(18)\quad \varphi = \int_{-\infty}^{\infty} B(\alpha) \cos \alpha x\, e^{-\sqrt{\alpha^2 + k_2^2}\, y}\, d\alpha \qquad (y \geq y_o)$$

where the $A(\alpha)$, $B(\alpha)$ are the same as found in II-A-1 except that g becomes

$$(19)\quad g = \frac{n_o}{\pi} \frac{1}{k_1^2 + \alpha^2}$$

B-1. Finite in the x-direction; infinite plane source

If the media are finite in length the problem can still be solved. The geometry is shown in Fig. II-B. The integral again becomes a series as in

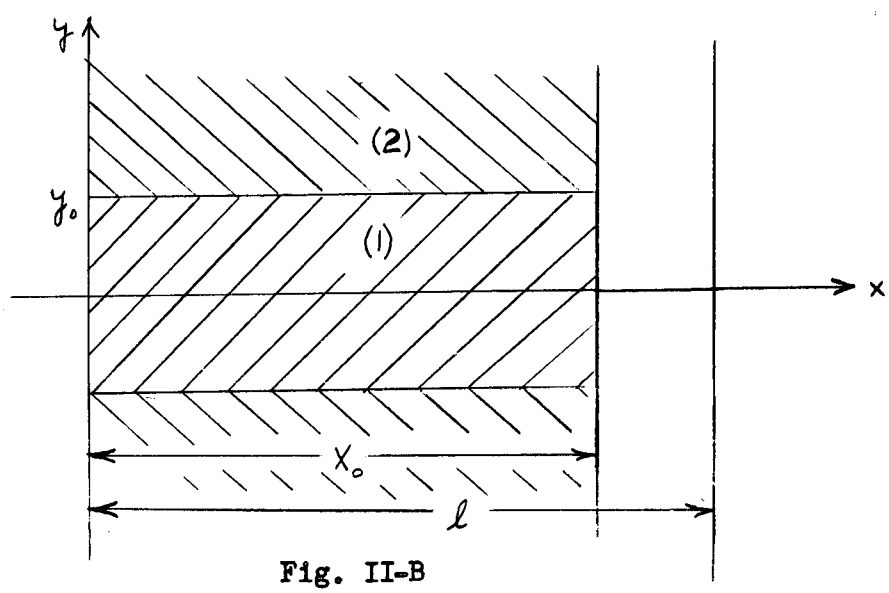


Fig. II-B

I-B. The extrapolation length is again used as in I-B. The only change in the statement of the problem occurs in boundary condition (5) which now becomes

$$\varphi(\ell, y) = 0 \tag{20}$$

where $\ell$ is the extrapolation length. If $x_o$ is the actual thickness of the media the $\ell$ is given by,

$$\ell = x_o + .7104\,\lambda\,. \tag{21}$$

The solution with the undetermined coefficients with a plane source of infinite extent at $x = 0$ is then

$$\varphi = -\frac{n_o}{k_1}\,\frac{\mathrm{sh}(\ell - x)k_1}{\mathrm{ch}\,\ell\,k_1} + \sum_{-\infty}^{\infty} A_n \cos\alpha x\,\mathrm{ch}\sqrt{\alpha^2 + k_1^2}\,y \qquad (-y_o \le y \le y_o) \tag{22}$$

$$\varphi = -\frac{n_o}{k_2}\,\frac{\mathrm{sh}(\ell - x)k_2}{\mathrm{ch}\,\ell\,k_2} + \sum_{-\infty}^{\infty} B_n \cos\alpha x\, e^{-\sqrt{\alpha^2 + k_2^2}\,y} \qquad (y \ge y_o) \tag{23}$$

Proceeding now as in I-B we obtain

$$A_n\,\mathrm{ch}\sqrt{\alpha^2 + k_1^2}\,y_o - B_n\, e^{-\sqrt{\alpha^2 + k_2^2}\,y_o} = g, \text{ defined in I-B- (25).}$$

$$A_n\,\lambda_1\sqrt{\alpha^2 + k_1^2}\,\mathrm{sh}\sqrt{\alpha^2 + k_1^2}\,y_o + B_n\,\lambda_2\sqrt{\alpha^2 + k_2^2}\; e^{-\sqrt{\alpha^2 + k_2^2}\,y_o} = 0$$

Solving these we obtain

$$A_n = \frac{\lambda_2\, g\,\sqrt{\alpha^2 + k_2^2}}{\lambda_2\sqrt{\alpha^2 + k_2^2}\,\mathrm{ch}\sqrt{\alpha^2 - k_1^2}\,y_o + \lambda_1\sqrt{\alpha^2 + k_1^2}\,\mathrm{sh}\sqrt{\alpha^2 + k_1^2}\,y_o} \tag{24}$$

$$(25)\quad B_n = \frac{-\lambda_1 g\sqrt{\alpha^2+k_1^2}\,\mathrm{sh}\sqrt{\alpha^2+k_1^2}\,y_o\, e^{\sqrt{\alpha^2+k_2^2}\,y_o}}{\lambda_2\sqrt{\alpha^2+k_2^2}\,\mathrm{ch}\sqrt{\alpha^2-k_1^2}\,y_o + \lambda_1\sqrt{\alpha^2+k_1^2}\,\mathrm{sh}\sqrt{\alpha^2+k_1^2}\,y_o}$$

If these are now substituted into (22) and (23) the complete solution is obtained.

II-B-2. <u>Finite plane source</u>

The above problem may be solved with the plane source finite in extent. In many applications it is desired to have the constant neutron current restricted to the inner medium. The boundary condition (3) would then become

$$(26)\qquad \varphi_x = n_o \qquad (-y_o \leq y \leq y_o)$$

$$= 0 \qquad (y \geq y_o,\ y \leq -y_o)$$

The solution with the undetermined coefficients to the above problem, finite in x-length is

$$(27)\quad \varphi = -\frac{n_o}{k_1}\,\frac{\mathrm{sh}(\ell - x)k_1}{\mathrm{ch}\,\ell\, k_1} + \sum_{-\infty}^{\infty} A_n \cos\alpha x\, \mathrm{ch}\sqrt{\alpha^2+k_1^2}\,y \qquad (-y_o \leq y \leq y_o,\ 0 \leq x \leq x_o)$$

$$(28)\quad \varphi = \sum_{-\infty}^{\infty} B_n \cos\alpha x\, e^{-\sqrt{\alpha^2+k_2^2}\,y} \qquad (y \geq y_o,\ 0 \leq x \leq x_o)$$

The $A_n$ and $B_n$ are then the same as those in II-B-1, (24) and (25) except that g is now given by

$$g = \frac{n_o}{k_1} \int_0^{\ell} \frac{\mathrm{sh}(\ell - x)k_1}{\mathrm{ch}\,\ell\, k_1} \cos \alpha\, x\, dx$$

(29)

$$= \frac{n_o}{\ell} \frac{1}{\alpha^2 + k_1^2}$$

where $\alpha = (m + \frac{1}{2}) \frac{\pi}{\ell}$

II-B'-1.

Using the geometry of Fig. II-B the finite problem above is treated with the more exact boundary condition that the return current at $x = x_o$ in each medium must vanish, or

(30) $$\varphi = -\varphi_x\, a_i\, \lambda_i$$

where $i = 1$ or $2$ depending as $|y| \leq y_o$ or $|y| \geq y_o$.

Benefitting from the intuition developed in I-B the solution may be written

(31) $$\varphi = \Phi_1 + \sum_{-\infty}^{\infty} A_n \cos \alpha\, x\, \mathrm{ch} \sqrt{\alpha^2 + k_1^2}\, y; \qquad |y| \leq y_o$$

(32) $$\varphi = \Phi_2 + \sum_{-\infty}^{\infty} B_n \cos \alpha\, x\, e^{-\sqrt{\alpha^2 + k_2^2}\, y}; \qquad |y| \geq y_o$$

where

$$\Phi_i = -\frac{n_o}{k_i} \frac{\mathrm{sh}(x_o - x)k_i + a_i\, \mathrm{ch}(x_o - x)k_i}{\mathrm{ch}\, x_o\, k_i + a_i\, \mathrm{sh}\, x_o\, k_i}$$

Setting the return current equal to zero at $x = x_o$, one verifies that the above equations are solutions if the $A_n$ and $B_n$ are even functions since

$$\alpha = \frac{n\pi}{x_o}$$

as in I-B'.

Imposing the usual conditions at $y = y_o$ of continuity of flux and current the following two simultaneous equations result:

$$(33) \quad A_n \operatorname{ch}\sqrt{\alpha^2 + k_1^2}\, y_o - B_n e^{-\sqrt{\alpha^2 + k_2^2}\, y} = \frac{1}{x_o}\int_0^{x_o} \left[-\Phi_1 + \Phi_2\right] \cos \alpha x \, dx$$

$$= g, \text{ defined in I-B'-(50)}$$

and

$$(34) \quad A_n \lambda_1 \sqrt{\alpha^2 + k_1^2}\, \operatorname{sh}\sqrt{\alpha^2 + k_1^2}\, y_o + B_n \lambda_2 \sqrt{\alpha^2 + k_2^2}\, e^{-\sqrt{\alpha^2 + k_2^2}\, y_o} = 0$$

The solutions to these equations are given in II-B-(24) and II-B-(25). The problem is then solved when $A_n$ and $B_n$ are substituted into (31) and (32).

II-B'-2. <u>Finite plane source</u>

The above device may also be applied to the problem described in II-B-2. Then the solution with the undetermined coefficients becomes

$$(35) \quad \varphi = \phi_1 + \sum_{-\infty}^{\infty} A_n \cos \alpha x \operatorname{ch}\sqrt{\alpha^2 + k_1^2}\, y \qquad (|y| \leq y_o,\ 0 \leq x \leq x_o)$$

$$(36)\quad \varphi = \sum_{-\infty}^{\infty} B_n \cos \alpha x \, e^{-\sqrt{\alpha^2 + k_2^2}\, y} \qquad (y \geq y_o,\ 0 \leq x \leq x_o)$$

The $A_n$ and $B_n$ are then the same as those in II-B-1, (24) and (25) except that

$$(37)\qquad g = \frac{1}{x_o} \int_o^{x_o} - \Phi_1 \cos \alpha x \, dx$$

$$= \frac{n_o}{x_o} \frac{1}{\alpha^2 + k_1^2} \left[ 1 + \frac{(-1)^{n+1}}{\text{ch } x_o k_1 + a_1 \text{ sh } x_o k_1} \right]$$

II-C-1. <u>Bare case; infinite in x-direction</u>

A special case of interest is the one where the outside medium is a vacuum or a perfect absorber. This is approximated by air or by media with small albedo. The differential equation and boundary conditions are written as follows:

$$\varphi_{xx} + \varphi_{yy} - k_1^2 \varphi = 0 \qquad (x \geq 0,\ -y_o \leq y \leq y_o)$$

$$\lim_{x \to \infty} \varphi(x, y) = 0 \qquad (-y_o \leq y \leq y_o)$$

$$\varphi(x, h) = 0 \qquad (x \geq 0)$$

$$\varphi(x, y) = \varphi(x, -y) \qquad (x \geq 0,\ -y_o \leq y \leq y\ )$$

$$\varphi_x = n_o \qquad (-y_o \leq y \leq y_o)$$

where h is the extrapolation length or

$$h = y_o + .7104\ \lambda_1$$

The solution is the same as that found earlier to be

$$(38)\quad \varphi = -\frac{n_o}{k_1}\, e^{-k_1 x} + \int_{-\infty}^{\infty} A(\alpha)\cos\alpha x \operatorname{ch}\left(\sqrt{\alpha^2 + k_1^2}\, y\right) d\alpha \qquad (-y_o \leq y \leq y_o)$$

We have one equation and one coefficient to determine. The Fourier integral gives us immediately

$$(39)\qquad A(\alpha)\operatorname{ch}\left(\sqrt{\alpha^2 + k_1^2}\, h\right) = \frac{n_o}{\pi}\,\frac{1}{k_1^2 + \alpha^2}$$

so putting $A(\alpha)$ from (39) into (38) we obtain the solution,

$$(40)\quad \varphi = -\frac{n_o}{k_1}\, e^{-k_1 x} - \frac{n_o}{\pi}\int_{-\infty}^{\infty} \frac{\operatorname{ch}\sqrt{\alpha^2 + k_1^2}\, y}{\operatorname{ch}\sqrt{\alpha^2 + k_1^2}\, h}\cos\alpha x\, d\alpha$$

II-C-2. <u>Finite in x-direction</u>

The above problem may be solved if the medium is finite in the x-direction. The solution then is

$$(41)\quad \varphi = -\frac{n_o}{k_1}\,\frac{\operatorname{sh}(\ell - x)k_1}{\operatorname{ch}\ell\, k_1} + \sum_{-\infty}^{\infty} A_n \cos\alpha x \operatorname{ch}\left(\sqrt{\alpha^2 + k_1^2}\, y\right) \qquad (-y_o \leq y \leq y_o,\ 0 \leq x \leq x_o)$$

where $\alpha = (n + \frac{1}{2})\dfrac{\pi}{\ell}$

Then

$$(42)\qquad A_n \operatorname{ch}\left(\sqrt{\alpha^2 + k_1^2}\, h\right) = \frac{n_o}{\ell}\,\frac{1}{\alpha^2 + k_1^2}$$

the solution is then obtained when $A_n$ from (42) is substituted into (41).

## III. The two medium problem with cylindrical geometry

The coordinates used are cylindrical and the solutions are independent of the angle because of the symmetry. See Fig. III-A.

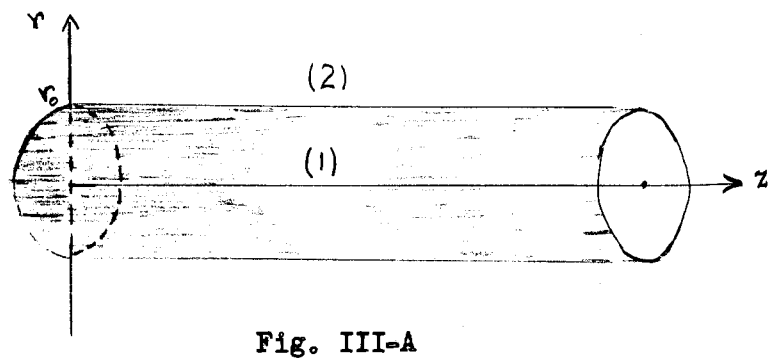


Fig. III-A

### A. Infinite plane source and media infinite in z-direction

The differential equations and boundary conditions when there is a constant neutron current over the plane $z = 0$, and the media are infinite in z-direction are the following:

(1) $\varphi_{rr} + \frac{1}{r}\varphi_r + \varphi_{zz} - k_1^2\varphi = 0$ $\qquad (r \leq r_o,\ z \geq 0)$

(2) $\varphi_{rr} + \frac{1}{r}\varphi_r + \varphi_{zz} - k_2^2\varphi = 0$ $\qquad (r \geq r_o,\ z \geq 0)$

(3) $\lim_{z \to \infty} \varphi(r, z) = 0$ $\qquad (r \geq 0)$

(4) $\lim_{r \to \infty} \varphi(r, z) = \text{finite}$ $\qquad (z \geq 0)$

(5) $\varphi(0, z) = \text{finite}$ $\qquad (z \geq 0)$

(6) $\varphi_z(r, o) = n_o$ $(r \geq 0)$

(7) $\varphi(r_o+, z) = \varphi(r_o-, z)$ $(z \geq 0)$

(8) $\lambda_2 \varphi_r(r_o+, z) = \lambda_1 \varphi_r(r_o-, z)$ $(z \geq 0)$

Although the solution to the above problem could be written down as in II, it will be more instructive to write it down in detail. First let us assume that the variables separate and write

(9) $$\varphi = R Z$$

Substituting this into the differential equation for say $r \leq r_o$ we obtain

(10) $\frac{R''}{R} + \frac{1}{r} \frac{R'}{R} + \frac{Z''}{Z} - k_1^2 = 0$ $(r \leq r_o)$

or

(11) $-\frac{Z''}{Z} = \frac{R''}{R} + \frac{1}{r} \frac{R^1}{R} - k_1^2 = \alpha^2$ or $-\beta^2$; $\alpha^2 > 0$, $\beta^2 > 0$

The choice of the separation constant here is the same as in Section I. We have

(12) $Z'' + \alpha^2 Z = 0$ $(z \geq 0)$

(13) $R'' + \frac{1}{r} R' - (k_1^2 + \alpha^2)R = 0$ $(r \leq r_o)$

or

(14) $Z'' - \beta^2 Z = 0$ $(z \geq 0)$

(15) $$R'' + \frac{1}{r} R' - (k_1^2 - \beta^2)R = 0 \qquad (r \leq r_o)$$

The solutions $Z(\alpha, z)$ are trigonometric and $Z(\beta, z)$ are exponential or hyperbolic. The solutions $R(\alpha, r)$, $R(\beta, r)$ belong to the class of Bessel functions of index zero. When $r \leq r_o$ we choose $R = J_o$ or $I_o$ because these are the only Bessel functions with finite value for $r = 0$. One is chosen such that its argument is real. When $r \geq r_o$, we must choose a Hankel function, or $K_o(z)$, since these are the only Bessel functions that vanish for an infinite argument. We choose $I_o$ and $K_o$ in this report since then no imaginary functions will appear.

With the above statements in mind, let us write down the individual solutions when $r \leq r_o$.

From (12) and (13) we get

(16) $$Z = A(\alpha) \cos \alpha z + B(\alpha) \sin \alpha z$$

(17) $$R = C(\alpha)\, I_o(\sqrt{k_1^2 + \alpha^2}\, r) + D(\alpha)\, K_o(\sqrt{k_1^2 + \alpha^2}\, r)$$

From (14) and (15) we get

(18) $$Z = E(\beta)\, e^{-\beta z} + F(\beta)\, e^{\beta z}$$

(19) $$R = G(\beta)\, J_o(\sqrt{\beta^2 - k_1^2}\, r) + H(\beta)\, Y_o(\sqrt{\beta^2 - k_1^2}\, r) \qquad (\beta^2 > k_1^2)$$

(20) $$= I(\beta)\, I_o(\sqrt{k_1^2 - \beta^2}\, r) + J(\beta)\, K_o(\sqrt{k_1^2 - \beta^2}\, r) \qquad (\beta^2 < k_1^2)$$

(21) $$= K \log r + M \qquad (|\beta| = k_1)$$

when $r \leq r_o$ we have

$$(22) \qquad D(\alpha) \equiv K \equiv H(\beta) \equiv J(\beta) \equiv 0 \qquad \text{by (5)}$$

$$F(\beta) \equiv 0 \qquad \text{by (3)}$$

Hence we are left with

$$\varphi \equiv R\,Z$$

$$\equiv \int_{-\infty}^{\infty} C(\alpha)\, I_o(\sqrt{k_1^2+\alpha^2}\, r) \left[A(\alpha) \cos \alpha z + B(\alpha) \sin \alpha z\right] d\alpha$$

$$(23) \qquad + \int_{-k_1}^{k_1} I(\beta)\, I_o(\sqrt{k_1^2-\beta^2}\, r)\, E(\beta)\, e^{-\beta z}\, d\beta$$

$$+ \int_{k_1}^{\infty} \text{and} \int_{-\infty}^{-k_1} G(\beta)\, J_o(\sqrt{\beta^2-k_1^2}\, r)\, E(\beta)\, e^{-\beta z}\, d\beta$$

$$+ M\, E(k_1)\, e^{-k_1 z}$$

By a suitable choice of coefficients the above expression must be made to satisfy the differential equation and all its boundary conditions. Notice that if the second, third and fourth integrals vanish we can again apply the Fourier integral theorem, as in Part I. Let us choose $I(\beta)$ and $G(\beta) \equiv 0$ and see if the problem can still be solved. The following integral remains:

$$\varphi \equiv M\, E(k_1)\, e^{-k_1 z}$$

$$(24) \qquad + \int_{-\infty}^{\infty} C(\alpha)\, I_o(\sqrt{k_1^2+\alpha^2}\, r) \left[A(\alpha) \cos \alpha z + B(\alpha) \sin \alpha z\right] d\alpha \qquad (r \leq r_o)$$

Boundary condition (6) may be satisfied by taking the product $M\,E(k_1) = -\frac{n_o}{k_1}$ and $C(\alpha)\,B(\alpha)$ an odd function. Then the sine integral will contribute nothing to $\varphi$ and there remains

$$(25)\qquad \varphi = -\frac{n_o}{k_1}\, e^{-k_1 z} + \int_{-\infty}^{\infty} A(\alpha)\cos\alpha z\, I_o(\sqrt{k_1^2+\alpha^2}\, r)\,d\alpha \qquad (r \leq r_o)$$

A similar procedure may be followed when $r \geq r_o$ to obtain

$$(26)\qquad \varphi = -\frac{n_o}{k_2}\, e^{-k_2 z} + \int_{-\infty}^{\infty} B(\alpha)\cos\alpha z\, K_o(\sqrt{k_2^2+\alpha^2}\, r)\,d\alpha \qquad (r \geq r_o)$$

Now the boundary conditions (7) and (8) will determine $A(\alpha)$ and $B(\alpha)$ in (25) and (26). Then

$$(27)\qquad \int_{-\infty}^{\infty}\left[A(\alpha)\, I_o(\sqrt{k_1^2+\alpha^2}\, r_o) - B(\alpha)\, K_o(\sqrt{k_2^2+\alpha^2}\, r_o)\right]\cos\alpha z\, d\alpha$$

$$= -\frac{n_o}{k_1}\, e^{-k_1 z} - \frac{n_o}{k_2}\, e^{-k_2 z}$$

and

$$(28)\qquad \int_{-\infty}^{\infty}\left[A(\alpha)\,\lambda_1\, I_{or}(\sqrt{k_1^2+\alpha^2}\, r_o) - B(\alpha)\,\lambda_2\, K_{or}(\sqrt{k_2^2+\alpha^2}\, r_o)\right] d\alpha = 0$$

where the subscript r indicates the r-derivitive.

From Watson's Bessel Functions we find that

$$I_{ou}(u) \equiv I_1(u)$$

$$K_{ou}(u) \equiv - K_1(u)$$

Hence (28) may be simplified to

$$\int_{-\infty}^{\infty} \left[ A(\alpha)\, \lambda_1 \sqrt{k_1^2 + \alpha^2}\; I_1(\sqrt{k_1^2 + \alpha^2}\; r_o) + B(\alpha)\, \lambda_2 \sqrt{k_2^2 + \alpha^2}\; K_1(\sqrt{k_2^2 + \alpha^2}\, r_o) \right] d\alpha = 0$$

Using the Fourier integral theorem, we get

$$A(\alpha)\; I_o(\sqrt{k_1^2 + \alpha^2}\; r_o) - B(\alpha)\; K_o(\sqrt{k_2^2 + \alpha^2}\; r_o) =$$

(29)

$$\frac{n_o}{\pi} \frac{1}{k_1^2 + \alpha^2} - \frac{n_o}{\pi} \frac{1}{k_2^2 + \alpha^2} = g, \text{ say.}$$

and

(30) $$A(\alpha)\, \lambda_1 \sqrt{k_1^2 + \alpha^2}\; I_1(\sqrt{k_1^2 + \alpha^2}\; r_o) + B(\alpha)\, \lambda_2 \sqrt{k_2^2 + \alpha^2}\; K_1(\sqrt{k_2^2 + \alpha^2}\; r_o) = 0$$

Solving these simultaneously, one obtains

(31) $$A(\alpha) = \frac{1}{D} \left[ \lambda_2\, g \sqrt{k_2^2 + \alpha^2}\; K_1(\sqrt{k_2^2 + \alpha^2}\; r_o) \right]$$

and

$$(32) \qquad B(\alpha) = \frac{-1}{D}\left[\lambda_1 g \sqrt{k_1^2+\alpha^2}\, I_1(\sqrt{k_1^2+\alpha^2}\, r_o)\right]$$

where

$$D = \lambda_2\sqrt{k_2^2+\alpha^2}\, I_o(\sqrt{k_1^2+\alpha^2}\, r_o)\, K_1(\sqrt{k_2^2+\alpha^2}\, r_o) + \lambda_1\sqrt{k_1^2+\alpha^2}\, I_1(\sqrt{k_1^2+\alpha^2}\, r_o)\, K_o(\sqrt{k_2^2+\alpha^2}\, r_o)$$

If these are now substituted into (25) and (26) we obtain the desired solution to the differential equation and boundary values listed in (1) through (8).

Before we can accept this solution it must be shown that there is no real value of $\alpha$, $\alpha \geq 0$, that causes the denominator in (31) and (32) to become zero. That this is the case may be seen from the tables in Watson's Bessel Functions. All functions that appear in the denominator are positive, hence, it cannot vanish.

III-B. <u>Finite cylinder</u>

If the above geometry be finite in the z-direction (see Fig. III-B)

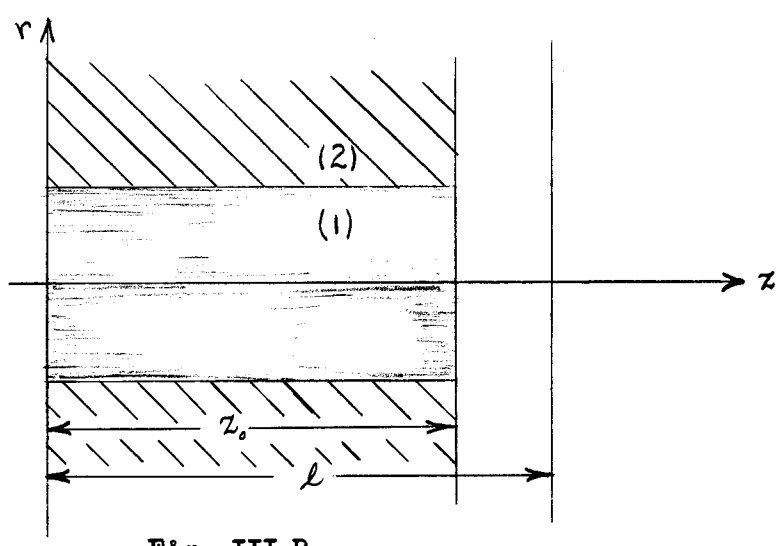


Fig. III-B

then the solution is modified in the manner of the previous sections. In this problem the boundary condition (3) becomes

$$(33) \qquad \varphi(r, \ell) = 0 \qquad (r \geq 0)$$

where, if $z_o$ is the actual length, of the cylinder

$$\ell = z_o + .7104\,\lambda, \qquad \text{as in I-B-(19)}$$

Now write down the solution with the undetermined coefficients as

$$(34) \quad \varphi = -\frac{n_o}{k_1}\,\frac{\mathrm{sh}(\ell - z)k_1}{\mathrm{ch}\,\ell\,k_1} + \sum_{-\infty}^{\infty} A_n \cos\alpha z\, I_o(\sqrt{\alpha^2 + k_1^2}\, r)$$

when $0 \leq r \leq r_o$, $0 \leq z \leq z_o$

$$(35) \quad \varphi = -\frac{n_o}{k_2}\,\frac{\mathrm{sh}(\ell - z)k_2}{\mathrm{ch}\,\ell\,k_2} + \sum_{-\infty}^{\infty} B_n \cos\alpha z\, K_o(\sqrt{\alpha^2 + k_2^2}\, r)$$

when $r \geq r_o$, $0 \leq z \leq z_o$

where $\alpha = (n + \frac{1}{2})\frac{\pi}{\ell}$, as in I-B and II-B.

The coefficients are determined using boundary conditions (7) and (8) and the orthogonality of the Fourier series. We obtain the two simultaneous equations

$$(36) \quad A_n I_o(\sqrt{\alpha^2 + k_1^2}\, r_o) - B_n K_o(\sqrt{\alpha^2 + k_2^2}\, r_o) =$$

$$\frac{n_o}{\ell}\int_0^{\ell}\left[\frac{\mathrm{sh}(\ell - z)k_1}{\mathrm{ch}\,\ell\,k_1} - \frac{\mathrm{sh}(\ell - z)k_2}{\mathrm{ch}\,\ell\,k_2}\right]\cos\alpha z\, dz$$

$= g$, as defined in I-B-(25)

and

$$(37)\quad A_n \lambda_1 \sqrt{k_1^2+\alpha^2}\; I_1(\sqrt{k_1^2+\alpha^2}\; r_o) + B_n \lambda_2 \sqrt{k_2^2+\alpha^2}\; K_1(\sqrt{k_2^2+\alpha^2}\; r_o) = 0$$

Solving (36) and (37), one obtains

$$(38)\quad A_n = \frac{1}{D}\left(\lambda_2\, g \sqrt{k_2^2+\alpha^2}\; K_1(\sqrt{k_2^2+\alpha^2}\; r_o)\right)$$

and

$$(39)\quad B_n = \frac{-1}{D}\left(\lambda_1\, g \sqrt{k_1^2+\alpha^2}\; I_1(\sqrt{k_1^2+\alpha^2}\; r_o)\right)$$

where

$$D = \lambda_1 \sqrt{k_1^2+\alpha^2}\; I_1(\sqrt{k_1^2+\alpha^2}\; r_o)\; K_o(\sqrt{\alpha^2+k_2^2}\; r_o) \cdot +$$

$$\lambda_2 \sqrt{k_2^2+\alpha^2}\; I_o(\sqrt{\alpha^2+k_1^2}\; r_o)\; k_1(\sqrt{k_2^2+\alpha^2}\; r_o)$$

If now (38) and (39) be substituted into (34) and (35), one obtains the solution to the problem where the source is plane and the media are finite in extent.

[illegible]

[illegible] by a finite source over the [illegible]

III-B'.

Using the geometry of Fig. III-B the finite problem above is treated with the more exact boundary condition that the return current at $z = z_o$ in each medium must vanish, or

$$\varphi = - \varphi_z \, a_i \, \lambda_i \tag{40}$$

where $i = 1$ or $2$ depending as

$$0 \leq r \leq r_o \text{ or } r \geq r_o$$

Benefitting from the intuition developed in III-B the solution may be written

$$\varphi = \Phi_1 + \sum_{-\infty}^{\infty} A_n \cos \alpha z \, I_o(\sqrt{\alpha^2 + k_1^2} \, r) \qquad (0 \leq r \leq r_o, \; 0 \leq z \leq z_o) \tag{41}$$

$$\varphi = \Phi_2 + \sum_{-\infty}^{\infty} B_n \cos \alpha z \, K_o(\sqrt{\alpha^2 + k_2^2} \, r) \qquad (r \geq r_o, \; 0 \leq z \leq z_o) \tag{42}$$

where

$$\Phi_i = - \frac{n_o}{k_i} \, \frac{\mathrm{sh}(z_o - z)k_i + a_i \, \mathrm{ch}(z_o - z)k_i}{\mathrm{ch}\, z_o \, k_i + a_i \, \mathrm{sh}\, z_o \, k_i} \tag{43}$$

Setting the return current equal to zero at $z = z_o$, one verifies that the above equations are solutions if the $A_n$ and $B_n$ are even functions since

$$\alpha = \frac{n\pi}{z_o}$$

Imposing the usual conditions at $y = y_o$ of continuity of flux and current the following two simultaneous equations result

$$A_n I_o(\sqrt{\alpha^2 + k_1^2}\, r_o) - B_n K_o(\sqrt{\alpha^2 + k_2^2}\, r_o) =$$

$$\frac{1}{z_o} \int_o^{z_o} \left[ - \Phi_1 + \Phi_2 \right] \cos \alpha z \, dz$$

$= g$ as defined in I-B'-(50)

and

$$(45) \quad A_n \lambda_1 \sqrt{k_1^2 + \alpha^2}\, I_1(\sqrt{k_1^2 + \alpha^2}\, r_o) + B_n \lambda_2 \sqrt{k_2^2 + \alpha^2}\, K_1(\sqrt{k_2^2 + \alpha^2}\, r_o) = 0$$

The solutions to these equations are given in III-B-(38) and -(39). The problem is then solved when $A_n$ and $B_n$ are substituted into (41) and (42).

III-C-1. <u>III-A with a plane source</u>

If the plane source of III-A be replaced by a finite source over the end of the cylinder the modification is slight.

Boundary condition (6) becomes

$$(46) \qquad \varphi_z(r, 0) = n_o \qquad (r \leq r_o)$$

$$= 0 \qquad (r \geq r_o)$$

and the solution with undetermined coefficients is

$$(47) \quad \varphi = -\frac{n_o}{k_1} e^{-k_1 z} + \int_{-\infty}^{\infty} A(\alpha) \cos \alpha z \, I_o(\sqrt{\alpha^2 + k_1^2}\, r) d\alpha \qquad (z \geq 0,\ r \leq r_o)$$

$$(48) \quad \varphi = + \int_{-\infty}^{\infty} B(\alpha) \cos \alpha z \, K_o(\sqrt{\alpha^2 + k_2^2}\, r) d\alpha \qquad (z \geq 0,\ r \geq r_o)$$

$A(\alpha)$ and $B(\alpha)$ are the same as determined in III-A except that

$$(49) \qquad g = \frac{n_o}{\pi} \frac{1}{k_1^2 + \alpha^2}$$

III-C-2. <u>III-B with a finite plane source</u>

If the plane source of III-B be replaced by a finite source over the end of the cylinder the boundary condition is again changed as in III-C-1 and the solution with undetermined coefficients is

$$(50) \quad \varphi = -\frac{n_o}{k_1} \frac{\mathrm{sh}(\ell - x)k_1}{\mathrm{ch}\, \ell\, k_1} + \sum_{-\infty}^{\infty} A_n \cos \alpha z \, I_o(\sqrt{\alpha^2 + k_1^2}\, r) \qquad (0 \leq z \leq z_o,\ r \leq r_o)$$

and

$$(51) \qquad \varphi = \sum_{-\infty}^{\infty} B_n \cos \alpha z \, K_o(\sqrt{\alpha^2 + k_2^2}\, r) \qquad (0 \leq z \leq z_o,\ r \geq r_o)$$

The equations (50) and (51) have the same coefficients as those determined in III-B except that g must be replaced by the g found in II-B-2-(29).

III-C'-2. <u>III-B with a finite plane source</u>

The above device may also be applied to the problem described in III-C-2. Then the solution with the undetermined coefficients becomes

$$(52) \quad \varphi = \Phi_1 + \sum_{-\infty}^{\infty} A_n \cos \alpha z \, I_o(\sqrt{\alpha^2 + k_1^2}\, r) \qquad (0 \leq z \leq z_o,\ r \geq r_o)$$

and

$$(53) \quad \varphi = \sum_{-\infty}^{\infty} B_n \cos \alpha z \, K_o(\sqrt{\alpha^2 + k_2^2}\, r) \qquad (0 \leq z \leq z_o,\ r \geq r_o)$$

The equations (53) and (52) have the same coefficients as those determined in III-B' except that g must be replaced by the g in II-B'-2-(37) where $z_o$ replaces $x_o$.

III-D. <u>Special case where outside medium is a perfect absorber, i.e., bare case</u>

1. <u>The medium infinite in the z-direction</u>

Boundary conditions (7) and (8) then become

$$(54) \qquad \varphi(h, z) = 0$$

Where $h = r_o +$ constant $\lambda_1$. The constant here for cylindrical geometry is a function of $r_o$ and has never been worked out exactly. An approximation may be made on the basis of diffusion theory and the value will lie between .5 and 1.5. The equation for the above problem with the undetermined coefficient is

$$(55) \quad \varphi = -\frac{n_o}{k_1} e^{-k_1 z} + \int_{-\infty}^{\infty} A(\alpha) \cos \alpha z \, I_o(\sqrt{\alpha^2 + k_1^2}\, r)\, d\alpha \qquad (r \leq r_o,\ z \geq 0)$$

Then

$$(56) \qquad A(\alpha)\, I_o(\sqrt{\alpha^2 + k_1^2}\, h) = \frac{n_o}{\pi} \frac{1}{k_1^2 + \alpha^2}$$

If now (56) be solved for $A(\alpha)$ and this put into (55) we obtain

$$(57) \quad \varphi = -\frac{n_o}{k_1} e^{-k_1 z} + \frac{n_o}{\pi} \int_{-\infty}^{\infty} \frac{\cos \alpha z}{k_1^2 - \alpha^2} \frac{I_o(\sqrt{\alpha^2 + k_1^2}\, r)}{I_o(\sqrt{\alpha^2 + k_1^2}\, h)}\, d\alpha$$

III-D-2. <u>The medium finite in the z-direction</u>

The change in bounday condition is the same as in III-D-1. The equation here with the undetermined coefficient is

$$(58) \quad \varphi = -\frac{n_o}{k_1} \frac{\mathrm{sh}(\ell - z)k_1}{\mathrm{ch}\, \ell\, k_1} + \sum A_n \cos \alpha z \, I_o(\sqrt{\alpha^2 + k_1^2}\, r) \qquad (r \leq r_o,\ 0 \leq z \leq z_o)$$

Then

(59) $A_n \, I_o(\sqrt{\alpha^2 + k^2} \; h) = g$, as found in II-B-2-(29)

and

(60) $$\varphi = -\frac{n_o}{k_1} \frac{sh(\ell - z)k_1}{ch \, \ell \, k_1} + \sum_{-\infty}^{\infty} g \cos \alpha z \frac{I_o(\sqrt{\alpha^2 + k_1^2} \; r)}{I_o(\sqrt{\alpha^2 + k_1^2} \; h)} \qquad (0 \leq z \leq z_o, \; r \geq r_o)$$