SECRET

CENTRAL RESEARCH LIBRARY
DOCUMENT COLLECTION

ORNL-487

REACTORS
PROGRESS REPORT

MARTIN MARIETTA ENERGY SYSTEMS LIBRARIES
3 4456 0360551 5

LABORATORY RECORDS
1954

OAK RIDGE NATIONAL LABORATORY
CENTRAL RESEARCH LIBRARY
CIRCULATION SECTION
4500N ROOM 175
LIBRARY LOAN COPY
DO NOT TRANSFER TO ANOTHER PERSON
If you wish someone else to see this report, send in name with report and the library will arrange a loan.
UCN-7969 (3 9-77)

TECHNICAL DIVISION

M.D.PETERSON, Director

REACTOR TECHNOLOGY

PROGRESS REPORT FOR QUARTER ENDING AUGUST 31, 1949

J.A.LANE AND C.E.WINTERS
ASSOCIATE DIRECTORS

EDITED BY
F.A.KOCUR

DECLASSIFIED
CLASSIFICATION CHANGED TO:
BY AUTHORITY OF:
BY:

OAK RIDGE NATIONAL LABORATORY
OPERATED BY
CARBIDE AND CARBON CHEMICALS CORPORATION
FOR THE
ATOMIC ENERGY COMMISSION

OAK RIDGE, TENNESSEE

DECLASSIFIED
CLASSIFICATION CHANGED TO:
BY AUTHORITY OF: Oid 1158
BY: Wagner 2-3-59

SECRET

[redacted]

ORNL 487
This document consists of 85 pages
Copy 7 of 104 copies.
Series A.

Contract No. W-7405, eng 26

TECHNICAL DIVISION

M. D. Peterson, Director

REACTOR TECHNOLOGY

PROGRESS REPORT FOR QUARTER ENDING AUGUST 31, 1949

J. A. Lane and C. E. Winters
Associate Directors

edited by

F. A. Kocur

Date Issued NOV 11 1949

OAK RIDGE NATIONAL LABORATORY

operated by

CARBIDE AND CARBON CHEMICALS CORPORATION

for the

ATOMIC ENERGY COMMISSION

Post Office Box P
Oak Ridge, Tennessee

[redacted]

This document contains information affecting the National Defense of the United States. Its transmission or the disclosure of its contents in any manner to an unauthorized person is prohibited and may result in severe criminal penalties, under applicable Federal laws.

[redacted]

This document contains restricted data as defined in the Atomic Energy Act of 1946.

[redacted]

MARTIN MARIETTA ENERGY SYSTEMS LIBRARIES

3 4456 0360551 5

OAK RIDGE NATIONAL LABORATORY INTERNAL DISTRIBUTION

1. G. T. Felbeck (C&CCC)
2. 706-A Library
3. 706-A Library
4. 706-B Library
5. Biology Library
6. Health Physics Library
7. Training School Library
8. Training School Library
9. Central Files
10. Central Files
11. Central Files
12. Central Files
13. J. A. Swartout
14. J. H. Gillette
15. A. Hollaender
16. J. H. Frye, Jr.
17. E. J. Murphy
18. C. N. Rucker
19. W. D. Lavers
20. A. M. Weinberg
21. K. Z. Morgan
22. J. S. Felton
23. C. E. Winters
24. J. A. Lane
25. G. E. Boyd
26. R. W. Stoughton
27. F. L. Culler
28. D. G. Reid
29. A. S. Householder
30. F. L. Steahly
31. M. M. Mann
32. A. H. Snell
33. F. C. VonderLage
34. C. B. Graham
35. C. E. Larson (Y-12)
36. W. B. Humes (K-25)
37. R. E. Engberg
38. R. N. Lyon
39. W. R. Gall
40. R. M. Jones
41. T. Rockwell
42. F. Kerze

OAK RIDGE NATIONAL LABORATORY EXTERNAL DISTRIBUTION

43-54. Argonne National Laboratory
55-56. Atomic Energy Commission, Washington
57. Battelle Memorial Institute
58-61. Brookhaven National Laboratory
62. Bureau of Ships
63. Chicago Operations Office
64-67. General Electric Company, Richland
68. Hanford Operations Office
69. Iowa State College
70-73. Knolls Atomic Power Laboratory
74-76. Los Alamos
77. Massachusetts Institute of Technology (Kaufmann)
78. National Advisory Committee for Aeronautics
79. NEPA Project
80-81. New York Operations Office
82. North American Aviation, Inc.
83. Patent Branch, Washington
84-98. Technical Information Branch, ORE
99-100. University of California Radiation Laboratory
101-104. Westinghouse Electric Corporation

[redacted]

~~This document contains information affecting the National Defense of the United States within the meaning of the Espionage Act, 50 U.S.C. 31 and 32. Its transmission or the disclosure of its contents in any manner to an unauthorized person is prohibited by law. Information so classified may be imparted only to persons in the military and naval services of the United States, appropriate civilian officers and employees of the Federal Government who have a legitimate interest therein.~~

[redacted]

~~This document contains restricted data as defined in the Atomic Energy Act of 1954.~~

TABLE OF CONTENTS

SUMMARY 8

MATERIALS TESTING REACTOR PROJECT 10

Design Progress 10

ORNL Design Responsibility 10

Design Contractor Information 10

Design Data Sheets 11

Experimental Facilities 11

Air and Water System 11

Steel Structure 11

Concrete Shield 13

Tanks 13

Graphite 15

Cooling of the Graphite Reflector 15

Thermal Shield 29

Thermal Column 31

Controls 31

Fuel Assembly Radiation 39

Engineering Development 40

Status of the Reactor Mock-Up 40

Cooling System for the Reactor Mock-Up 40

Metal Gaskets for Mock-Up Tank 40

Shim Safety Rods 41

Control System 43

Regulating Rod 43

Mock-Up Handling Tools 43

Strain Measurements on Mock-Up 45

Corrosion of Reactor Materials 47

Corrosion Product Pick-Up in a Recirculation Water System 47

Beryllium 47

CHEMICAL ENGINEERING RESEARCH 51

Liquid Metals Handbook 51

Heat Transfer Studies 52

Engineering Properties of Irradiated Materials 52

Materials Testing Laboratory 53

TABLE OF CONTENTS

High Intensity Gamma Ray Source 53
Facilities for Hydride Irradiation 54
Determination of Fast Flux and Spectrum in Hole 19 54
Relative Effects of Beta and Gamma Irradiation 57
Properties of Gamma Irradiated Plastics and Oils 57
Other Irradiations 58

Solvent Extraction 58

Dry Fluorides 61

Hot Process Fume Lines 64

Reactor Cooling Air 66

ENGINEERING DESIGN AND DEVELOPMENT 70

Modification of Building 9204-1 at Y-12 70

Isotope Loader 70

Electrical Flowmeter 70

Homogeneous Reactor Corrosion Program 78

SHIELDING 81

Concretes 81

Boral 81

Attenuation Tank 82

Testing Laboratory 82

PERSONNEL 84

LIST OF FIGURES

Fig. 1	*MTR Air System Inside Reactor Structure*	12
Fig. 2	*Proposed Steel Structure for MTR*	14
Fig. 3	*Tank Sections for Materials Testing Reactor*	16
Fig. 4	*Permanent Graphite Zone Basic Block Pattern*	17
Fig. 5	*Location of Cooling Holes in Permanent Graphite (End View Only)*	18
Fig. 6	*Typical Flow of Air in Permanent Graphite Zone*	19
Fig. 7	*MTR Graphite Reflector Intersection of Basic Block Pattern Down Beam Hole (Offset)*	20
Fig. 8	*Schematic Sectional View Showing Graphite Reflector Supports*	21
Fig. 9	*Heat Production in Reflector for Slab or Square Loading*	23
Fig. 10	*Horizontal Cross-Section Through Reactor and Reflector at Center of Active Lattice*	24
Fig. 11	*Permanent Graphite Zone Plan View with Locations of Cooling Holes*	26
Fig. 12	*Temperature Pattern in HG-9 Liner*	28
Fig. 13	*Thermal Shield Isometric*	30
Fig. 14	*Thermal Column N-S Section on Pile Centerline*	32
Fig. 15	*Schematic Diagram of Existing Shim-Rod Position Indicator Mechanism*	34
Fig. 16	*Schematic Diagram of Revised Shim-Rod Position Indicator Mechanism*	35
Fig. 17	*Direct Reading Dial Type Position Indicator for Regulating Rods*	36
Fig. 18	*Schematic Diagram of Revised Regulating Rod Position Indicator Mechanism*	37
Fig. 19	*Shim Rod Roller Bearing*	38
Fig. 20	*Friction in Chevron Packed Water Seal Gland in Top Plug*	42
Fig. 21	*Flowsheet, Slug Fluorination System*	59
Fig. 22	*Slug Fluorination Reactor*	60

Fig. 23 *Filter House Life* 67

Fig. 24 *Atmospheric Pressure Corrosion Test Units* 71

Fig. 25 *Controls and Protective Enclosure for the Large High Pressure Autoclave for Corrosion Studies* 72

Fig. 26 *Departmental Shop (Installation Incomplete)* 73

Fig. 27 *Dynamic Corrosion Test Equipment* 74

Fig. 28 *120,000 lb. Baldwin Tension-Compression Testing Machine* 75

Fig. 29 *Experimental Area* 76

LIST OF TABLES

Table 1	*Strain Measurements on Mock-Up Tank Section D*	46
Table 2	*Strain Measurements on Mock-Up Side Skirt Plate and Upper Grid*	46
Table 3	*Stagnant High Temperature Beryllium Corrosion Tests*	49
Table 4	*Material History of All High Temperature Beryllium Corrosion Tests*	50
Table 5	*Hot Pilot Plant Off Gases*	65
Table 6	*Special CWS Filter Pockets Exposure*	66
Table 7	*Reactor Filter House Efficiency*	69
Table 8	*Stagnant Uranyl Sulfate Corrosion Tests*	77
Table 9	*Chemical Composition of Materials Used in the Uranyl Sulfate Corrosion Tests*	78
Table 10	*Stagnant Uranyl Sulfate Corrosion Tests*	79
Table 11	*Corrosion Behavior of Various Metals and Alloys in Uranyl Sulfate*	80

SUMMARY

MATERIALS TESTING REACTOR PROGRAM

Reactor Design. Design reports were started and a system outlined for conveying information to a design contractor. These reports are approximately 50% complete. Layouts of the graphite were made showing a general means of stacking with specific attention around experimental facilities. Extensive work was started toward thermal analysis of the structure and the thermal shield. Design proposals were laid out for the thermal shield, structural steel, air system, reactor tank and thermal column. Several changes affecting the shim rod and regulating rod position indicators were made.

Reactor Mock-up. The mock-up tank was completely dismantled and reassembled. Hydraulic and stress-strain measuring devices were positioned, heat exchangers to cool the recirculating water were installed, miscellaneous repairs and corrections made, and the system thoroughly cleaned. The data accumulated on the tests during this period will be reviewed and the reports will be issued during the next quarter.

Corrosion. The replaceable beryllium assemblies exhibit satisfactory corrosion resistance after several tests.

CHEMICAL ENGINEERING RESEARCH

Editors for all sections of the Liquid Metals Handbook were appointed and first drafts are expected to be completed during September, 1949.

Design of an apparatus for exposing materials to a high gamma flux was completed and fabrication started.

Several tests, in collaboration with NEPA, to determine the stability of metal hydrides subjected to radiation are planned for the near future.

A dry fluoride process was tested in which a full Hanford slug (not irradiated) was used. The test data were encouraging and indicated several changes to be tried in the next experiment.

Sampling of the process hood discharges from Building 706-C was completed. Simultaneous sampling of building air revealed that nearly all of the hood discharge activity was already present in the room air entering the hood.

ENGINEERING DESIGN AND DEVELOPMENT

Process and experimental equipment was installed in Building 9204-1 at Y-12. Personnel were transferred from X-10 and are functioning in the new quarters.

The chain conveyor type isotope loader is being modified.

Corrosion tests are set up for investigating several materials which may be suitable for the proposed homogeneous reactor.

SHIELDING

A survey of the entire field of monolithic shielding was completed and will be issued as ORNL 243.

Essentially all the work on boral was completed and a report, ORNL 242, issued.

Experiments with lead, iron, and water and calibration tests on the attenuation tank will be the principal use made of the tank during the next few months.

MATERIALS TESTING REACTOR PROJECT

DESIGN PROGRESS

ORNL Design Responsibility. At the fourteenth meeting of the Materials Testing Reactor Steering Committee a clear definition of the division of responsibility between Oak Ridge and Argonne National Laboratories was made. This definition is given in the minutes (ANL-SM-26). In general, ORNL is responsible for design of all reactor control instruments, the reactor shield, and everything contained therein except experimental hole plugs.

Design Contractor Information. To place necessary information in the hands of the design contractor as efficiently as possible a report system was planned and preparation of the reports started. The system consists of a "Contractor's Work Brief" and a series of "MTR Design Reports."

The Contractor's Work Brief constitutes an introduction to the Materials Testing Reactor Project, written especially for the design contractor. It is written in cognizance of the fact that it will be used largely by personnel new to the technology of nuclear reactors.

Sufficient background and history are included to disclose the fundamental premises of the current design. Particular emphasis is placed upon a review of the pre-contract design and development programs in effect since the Materials Testing Reactor was initiated in November, 1948. A method of transmittal of technical data and specifications through the medium of MTR Design Reports is described, along with an education and orientation program for contractor's employees. Contractual responsibilities are reviewed and the mechanism for construction drawings and design changes is disclosed.

The MTR Design Reports consist of a series of reports, each of which will describe in as complete detail as possible a given component of the reactor giving the design data, development work, materials required, bibliography, and description of design completed. A list of the titles follows:

MTR DESIGN REPORT LIST

1. Tank Sections A through E
2. Graphite Reflector
3. Air System
4. Thermal Shield
5. Structural Steel
6. Neutron Crystal Spectrometer
7. Slurry Experimental Facility
8. Shielding Facility
9. Thermal Column T-2
10. Vertical Hydraulics

11. Reactor Experimental Facilities—General
12. Pile Structure
13. Pile Structure—External Service Facilities
14. Monitoring System
15. Reactor Control System—Exterior
16. Design Data Sheets
17. Instrument Holes

Design Data Sheets. The design data sheets contained in a memorandum from J. R. Huffman to the Steering Committee (ANL-ABS-3) were studied in detail and brought up to date. A new grouping of data has been used as follows: (1) Nuclear Data, (2) Engineering Design, (3) Experimental Facilities, and (4) Health Hazards and Miscellaneous Data.

Under Nuclear Data all data pertaining to neutron and gamma rays were collected. Graphs showing neutron flux distribution, heat production in the reflector, and gamma activity of cooling water were included where previous issues had tables. New data were used where available in preparation of these curves. A new table of gamma ray spectrum was added to give a concise grouping for shielding calculations. A section on engineering design of previous issues was checked and brought up to date.

A list of experimental facilities was arranged in order of flux level.

Experimental Facilities. The experimental facilities have suffered only minor changes during the quarter and these were due to structural considerations. Two vertical holes through the permanent graphite were eliminated and several other facilities moved slightly.

Air and Water Systems. The air system, Fig. 1, has been revised to avoid conflict with the proposed structural steel design for the reactor tank and thermal shield. Twenty-one 8-inch square inlet air ducts replace the former 8-inch diameter ducts. Two 30-inch square outlet ducts replace the former 36—inch diameter ducts.

The exit water crossover was raised from 7.33 feet to 12 feet above the reactor centerline for added safety precautions.

Steel Structure. It was decided that a structural steel supporting structure is required to support the reactor tank and thermal shield independent of the concrete because of uncertainty as to shrinkage factors, thermal stresses,

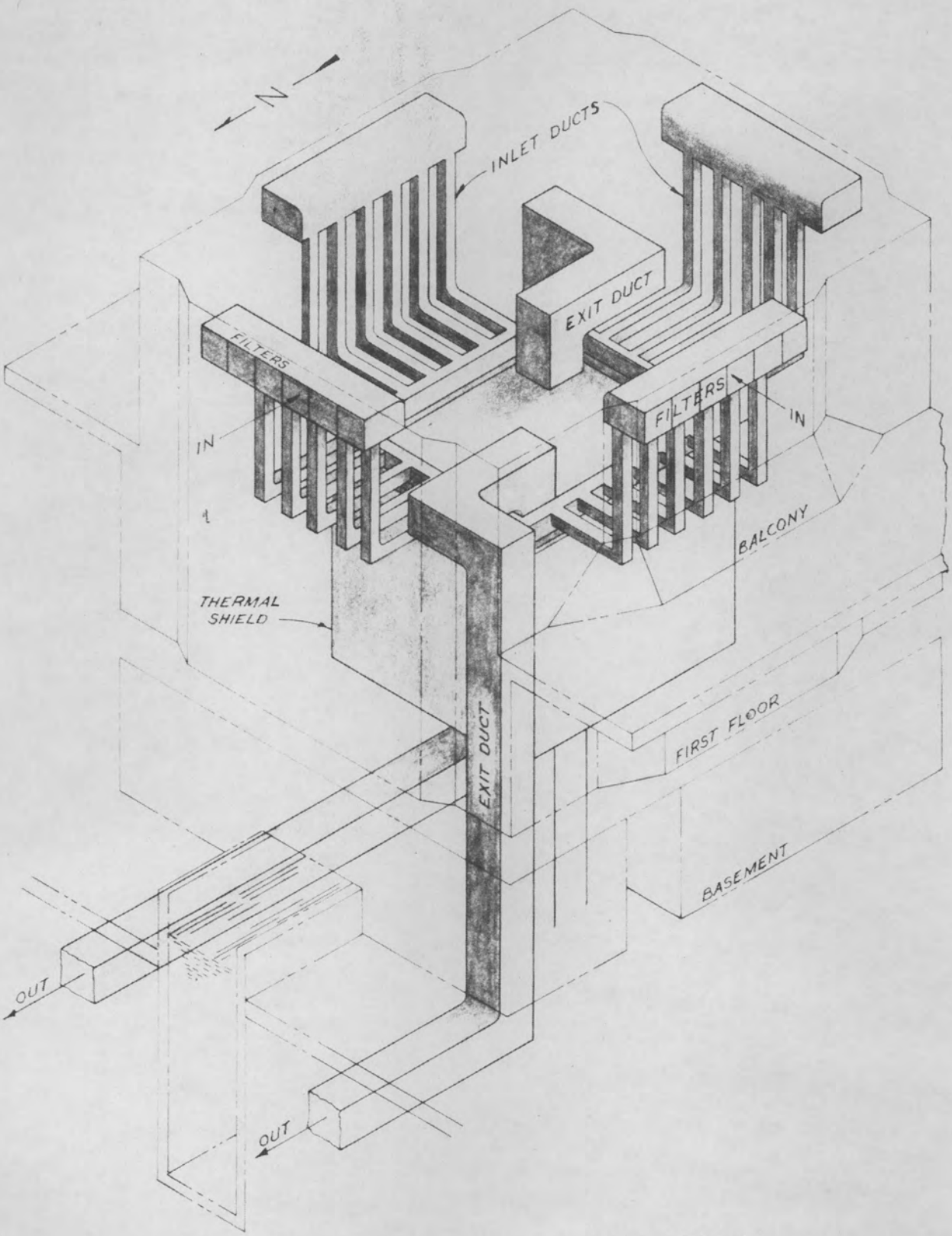

FIG. 1
MTR AIR SYSTEM
INSIDE REACTOR STRUCTURE

etc., in the concrete. An analysis of the loads on this structure was made and a design proposed (R. K. Browning, CF 49-7-12, June 20, 1949) which is shown in Fig. 2. Four 14-inch columns, which are adjacent to the outer corners of the thermal shield, rise from the sub-pile room floor to within 6 feet of the top of the pile structure. Horizontal beams attached to the columns support the upper and lower portion of the reactor tank, the bottom plug, and the thermal shield. The structural steel is imbedded in the concrete structure of the pile.

Concrete Shield. A study of the concrete shield is in progress to determine the heat generation from radiation, temperature gradients, and radiation shielding effectiveness. All calculations are based on 60,000 kw operation of the reactor.

The temperature of the concrete adjacent to the vertical walls of the thermal shield, assuming a one-half inch air space between concrete and thermal shield, will be about 20° F above the temperature of the outer concrete surface. However, since the top and bottom plates of the present thermal shield design will be about 200° F above the outer vertical plates, the temperature rise in the concrete adjacent to the top and bottom plates would be from 100-150° F above the outer concrete surface temperature without additional cooling. Means are being provided to limit the temperature drop across the concrete to 50° F.

A minimum of four and one-half feet of ordinary concrete around the exit water lines and sixteen inches of ordinary concrete around the exit air ducts will be necessary to keep the radiation level outside the concrete below instrument tolerance of 0.01 r/8 hrs.

Tanks. A more extensive study was made of the shielding requirements in the vicinity of the top and bottom plugs. The result is an alternate design which is proposed but not yet approved. It is believed the fabrication cost will be less for this design than for the previous one, and that the weak points of shielding are eliminated. Significant changes are a reduction in wall thickness of Tank Section A from 3 inches to 5/8 inches, and the addition of a steel ring at the top flange of the tank to provide the necessary shielding. The inlet water lines are also lowered far enough below the top of the shield so that no special shielding is required above them.

Radiation streaming through the monitor tube annuli and the bottom plug annulus does not present a problem if the monitor tubes are re-designed to contain a lead filler. The area below the bottom plug will be slightly above instrument tolerance (0.01 r per 8 hours) but the addition of a 2 in. thick sliding lead door will bring the sub-pile room within limits.

DWG. #7881

[redacted]

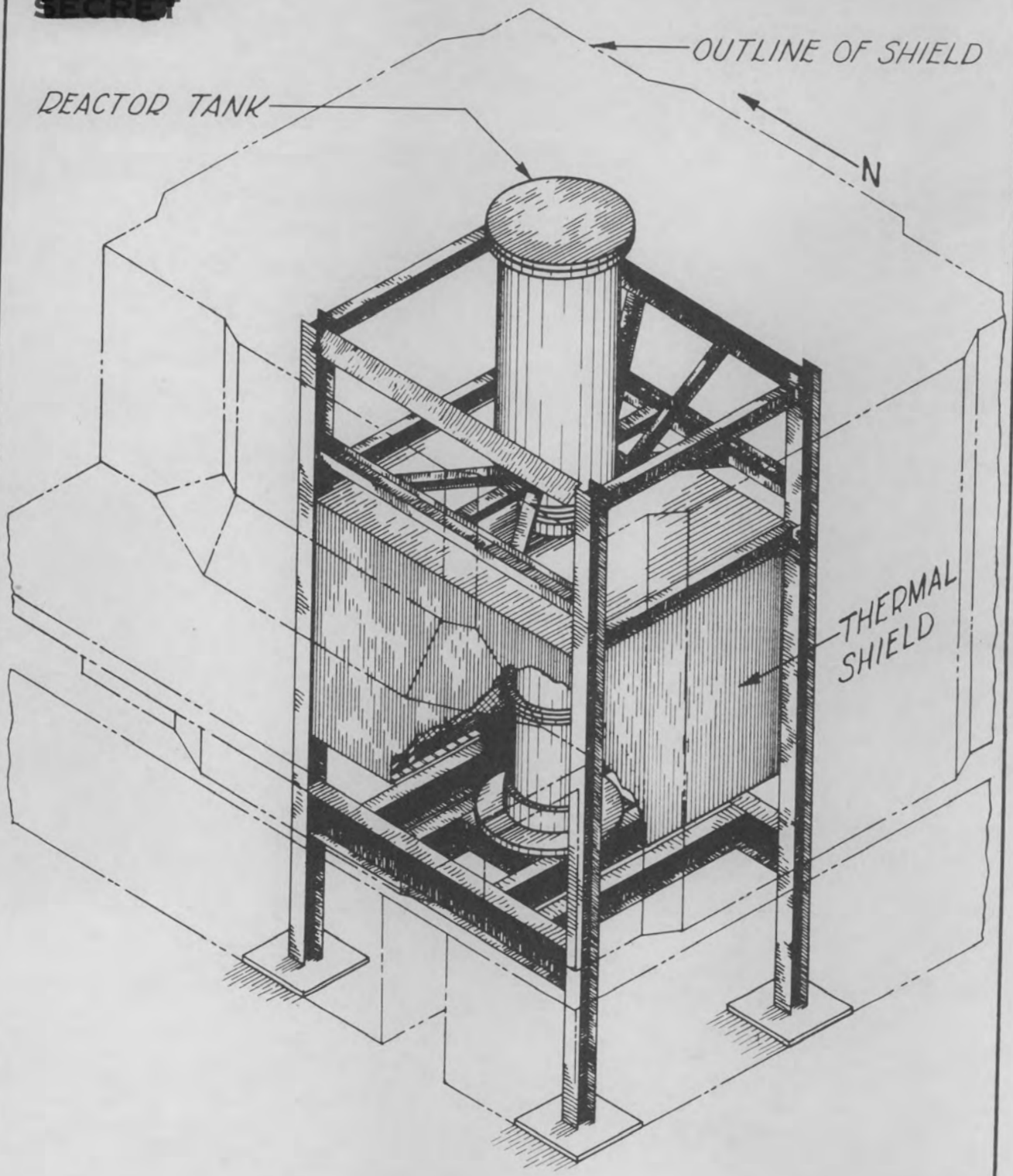

PROPOSED STEEL STRUCTURE FOR MTR
FIG. 2

Figure 3 illustrates the proposed arrangement of the reactor tank. This represents the existing approved design with the exception of the reduced wall thickness of Tank Section A. It will be noted that this arrangement differs from previously published drawings in that section C is now an aluminum section extending above the top of the thermal shield and connecting to section B which is an expansion joint.

Graphite. Preliminary layouts were made of a method for stacking the permanent graphite in the thermal shield. The graphite reflector between the outside of the Reactor Tank wall and the inside of the thermal shield consists of a pebble zone, surrounding and concentric with the tank, 7.33 feet square, enclosed by solid graphite extending to the inside wall of the thermal shield, the graphite as a whole having a total height of 9.33 feet. In general, the solid graphite is built of four inch square bars stacked perpendicular to the thermal shield walls as shown in Fig. 4. One-half inch diameter cooling holes pass vertically from top to bottom of the stack as shown in Figs. 5-6. Along the inside face of the stack one-inch keys pass horizontally between the bars.

Methods for passing experimental holes through the permanent graphite were studied and several alternates devised. The most difficult experimental holes to provide are those passing through at an angle, such as the off-set down-holes. Figure 7 shows the type of intersection between these holes and the graphite blocks. For each of these holes a liner extends through the thermal shield, solid graphite, and pebble zone.

The graphite is supported on steel plates laid on a fabricated angle iron frame work which stands on the bottom plate of the thermal shield. The support for the pebble graphite is perforated for air flow and divided into two plates sloping toward the center of the tank to allow the balls to flow into chutes for discharge from the reactor as shown in Fig. 8.

Cooling of the Graphite Reflector. Problems involved in cooling the graphite reflector were studied and the cooling requirements re-established on the basis of the most recent heat production information. A pattern of cooling channels was established for the permanent reflector subject to modification by further calculation and development of new information.

Preliminary to the calculation of cooling problems involved in the design of the graphite a survey of reports pertaining to the reactor was made to establish the probable heat production rates in the graphite reflector. Since much of the information was based upon premises somewhat different from the present conception of the reactor, data found were "normalized" upon the following basis:

[redacted]

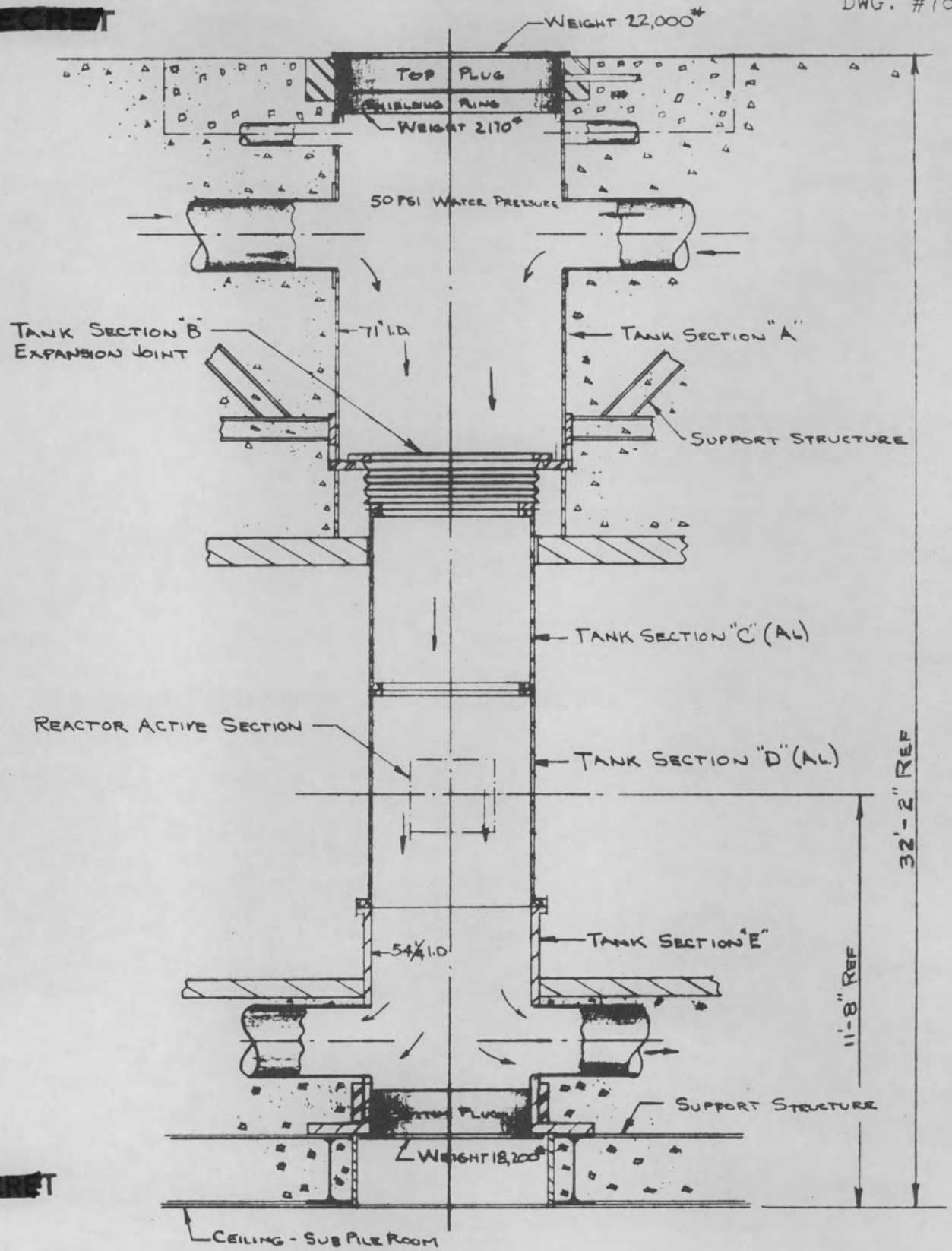

[redacted]

TANK SECTIONS

MATERIALS TESTING REACTOR

FIG. 3

8-4-49
GILL

[redacted]

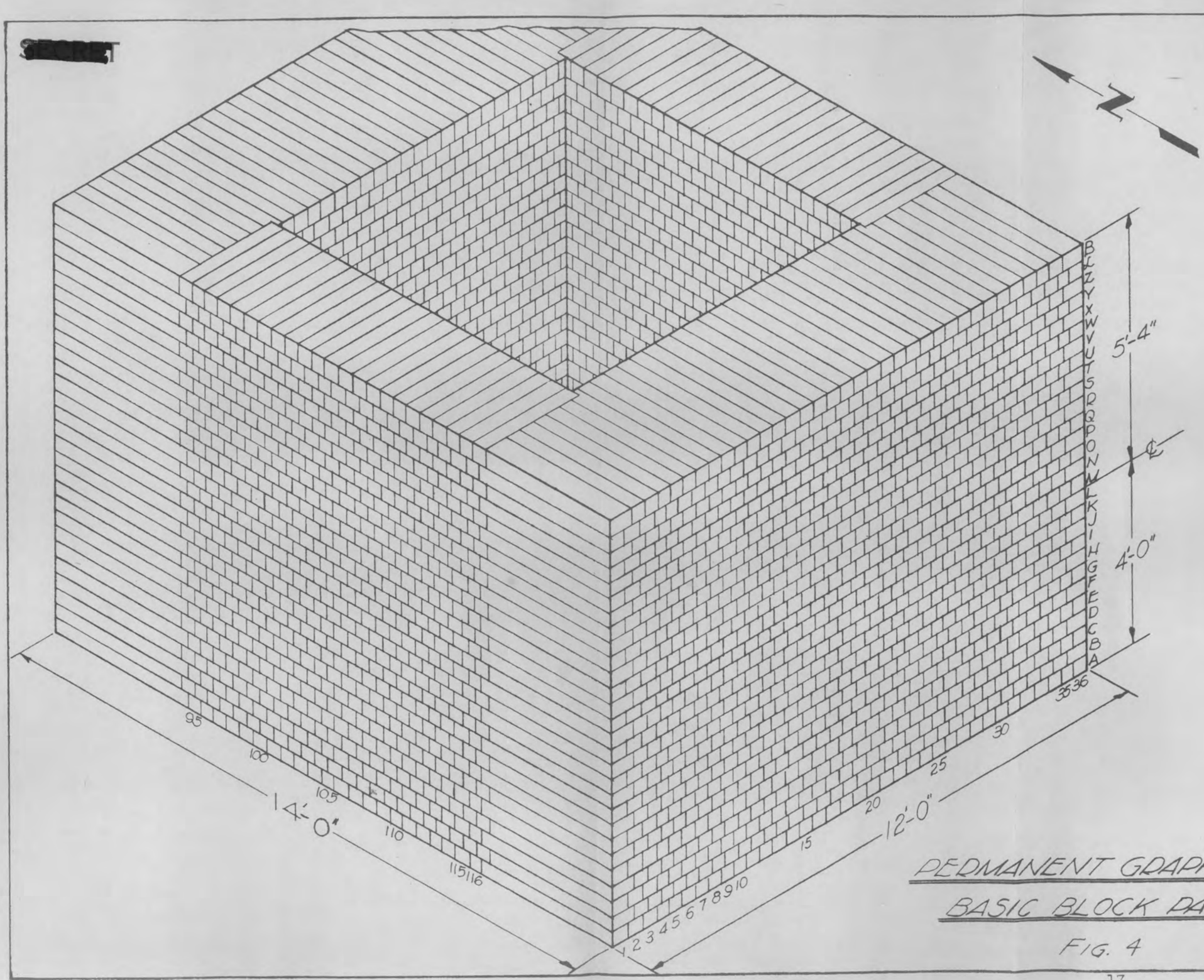

[redacted]

PERMANENT GRAPHITE ZONE

BASIC BLOCK PATTERN

FIG. 4

DWG. #7883

[redacted]

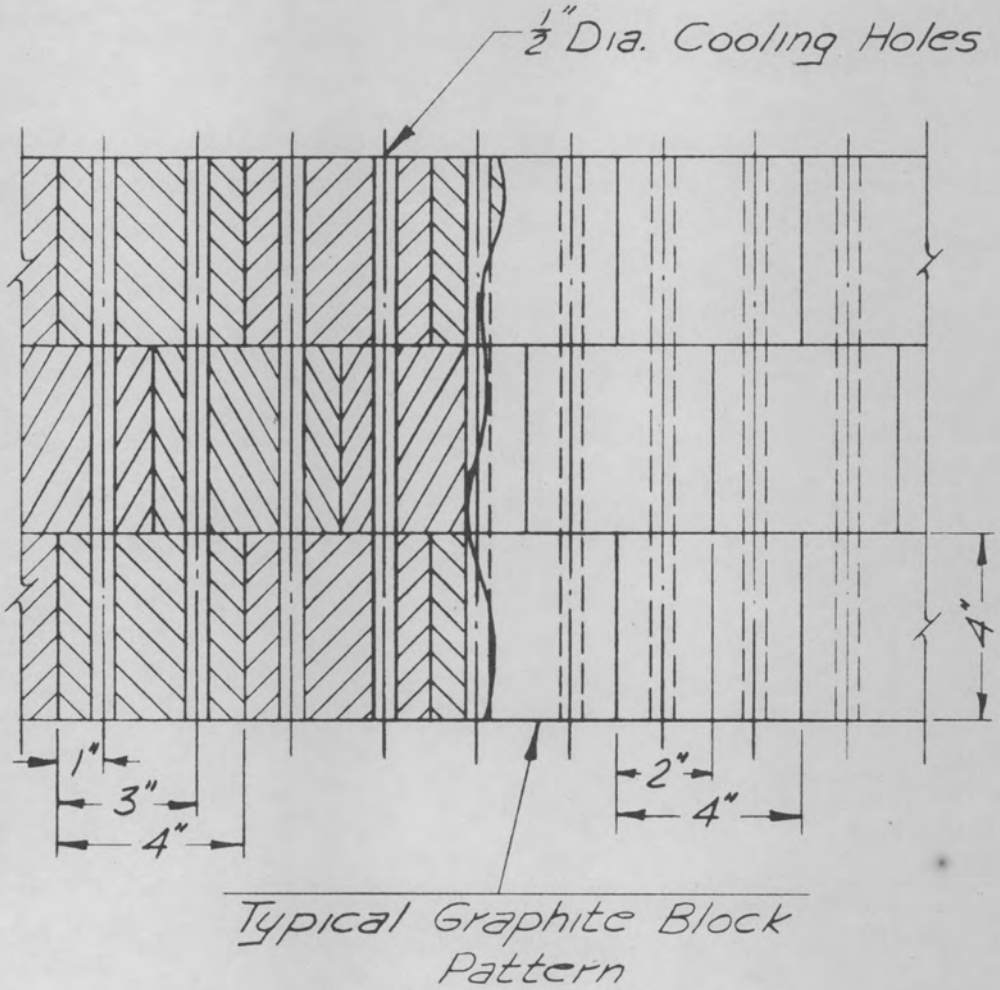

LOCATION OF COOLING HOLES IN PERMANENT GRAPHITE (END VIEW ONLY)

Fig. 5

Dwg. # 7837 [redacted]

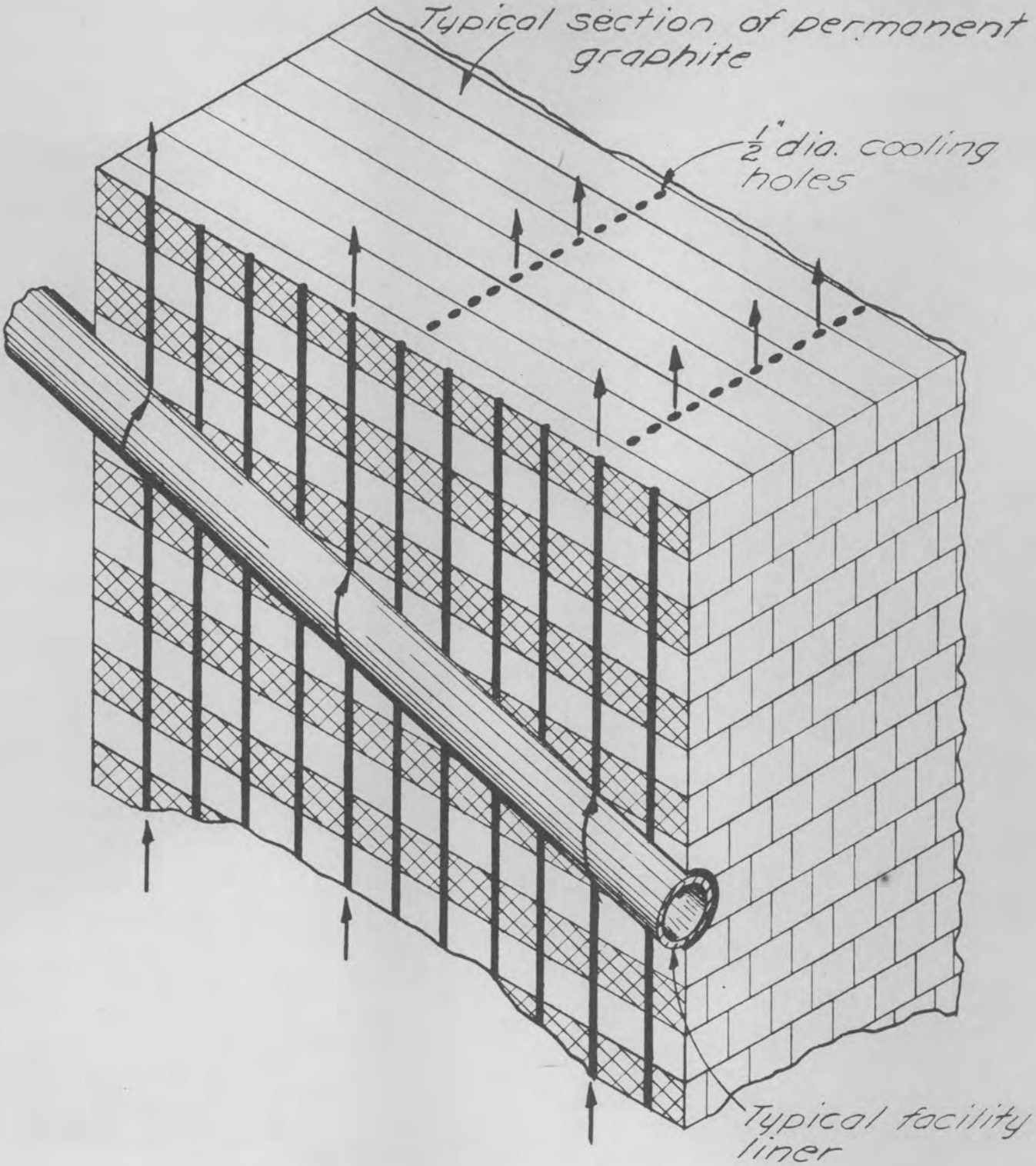

TYPICAL FLOW OF COOLING AIR IN PERMANENT GRAPHITE ZONE

FIG. 6

Dwg. # 7845

[redacted]

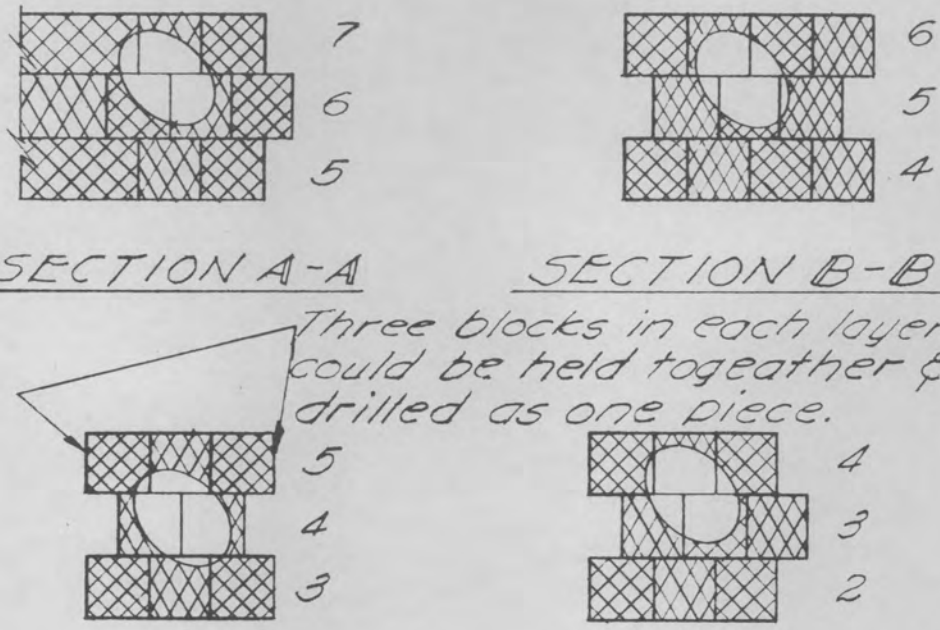

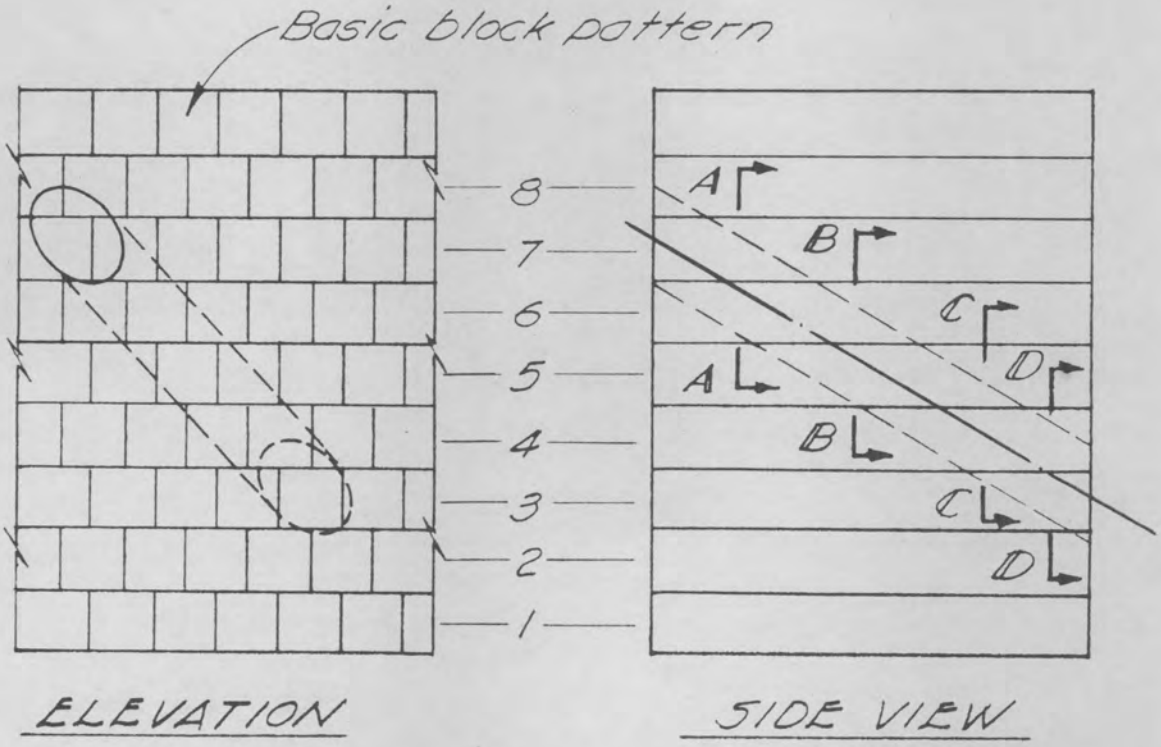

MTR GRAPHITE REFLECTOR

INTERSECTION OF BASIC BLOCK PATTERN

DOWN BEAM HOLE (OFFSET)

Fig. 7

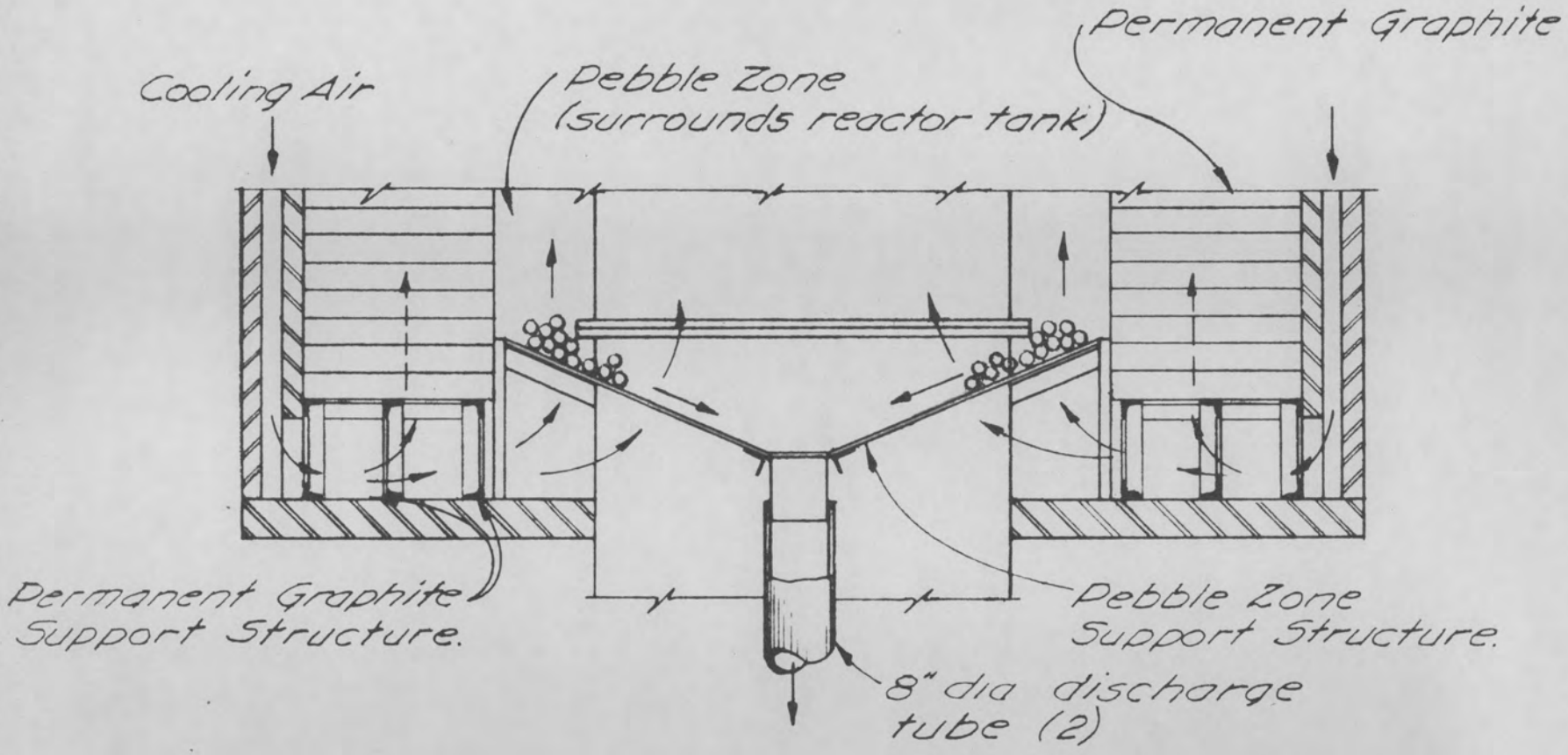

SCHEMATIC SECTIONAL VIEW SHOWING
GRAPHITE REFLECTOR SUPPORTS
Fig. 8

Dwg. # 7847

SECRET

Power—30,000 kw (removed in water and air)
U^{235} in reactor—3.5 kg (23 assemblies + ½ of 4 shim rods)
Cross section of U^{235} in reactor 4840 cm^2
Mev/fission—187
Fission/sec—9.9×10^{17}
Average $(nv)_{th}$—2×10^{14}
Dimensions of slab lattice—72.5 cm × 23 × 60 cm
Specific power—300 kw/liter

Using the calculated flux distribution curves of MonP 272 and the experimental curves of ORNL 167 as a basis, the ratio of $(nv)_{th}$ at the center of the slab lattice to the average was estimated to be 1/0.8 and $(nv)_{th}$ at the center to be 2.5×10^{14}.

With the lattice described above as a model, a comparision was made between it and the 3 kg critical assembly for which heat production data are reported by Martin and Mann in ORNL 167. Results indicated the heat production curves of ORNL 167 should be multiplied by 1.2 to normalize those curves to the model lattice. This was done and the resulting curve extrapolated to distances greater than the measured 60 cm from the face of the slab on the basis of parallelism with a calculated curve similar to that reported in MonP 272 but corrected for reflector size. The resulting heat production curve gives values considerably greater than those obtained from calculated curves used previously. Therefore, since the data were obtained from physical measurements, it appears necessary to use modifications of this heat production curve in all future calculations. Presented in Fig. 9 is the curve corrected for the contribution of fast neutrons at the face of the lattice, the presence of a graphite pebble zone, and the contribution from gammas generated in the thermal shield. The figure also contains a curve for heat production perpendicular to that face of the square lattice nearest the tank wall. Figure 10 shows a cross section of the reactor and reflector and the location of the two loadings.

Assuming the validity of the heat production data the cooling of the graphite was calculated on the basis of a maximum permissible graphite temperature of 570° F when operating at a steady power of 45,000 kw. Air admitted to the pile was assumed to be at 75° F, 30% relative humidity and 25.5 in. of Hg absolute pressure; all considered to be representative of conditions at Arco, Idaho, during 90% of the year.

DWG. #7884

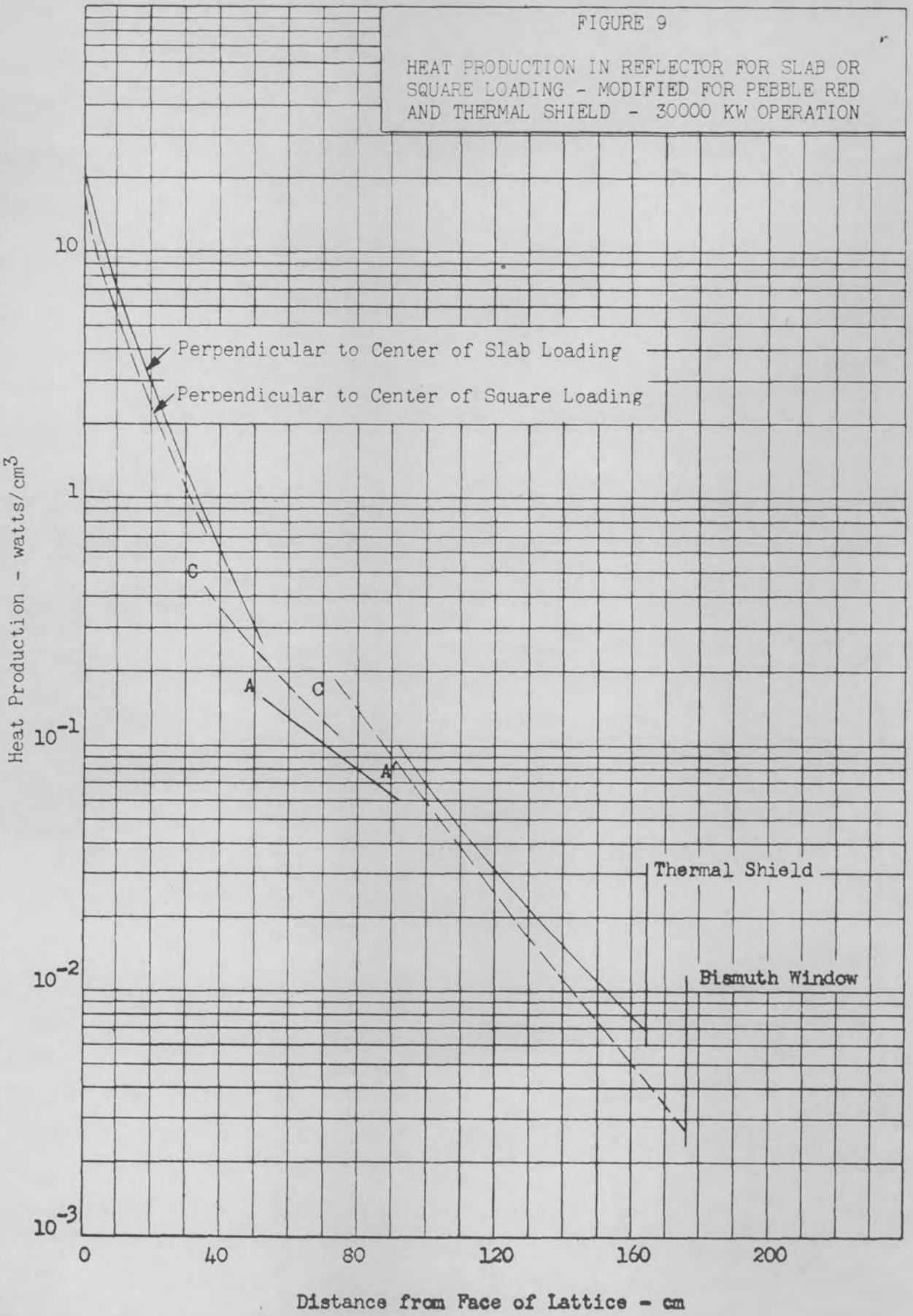

FIGURE 9

HEAT PRODUCTION IN REFLECTOR FOR SLAB OR SQUARE LOADING - MODIFIED FOR PEBBLE RED AND THERMAL SHIELD - 30000 KW OPERATION

[redacted]

DWG. #7885

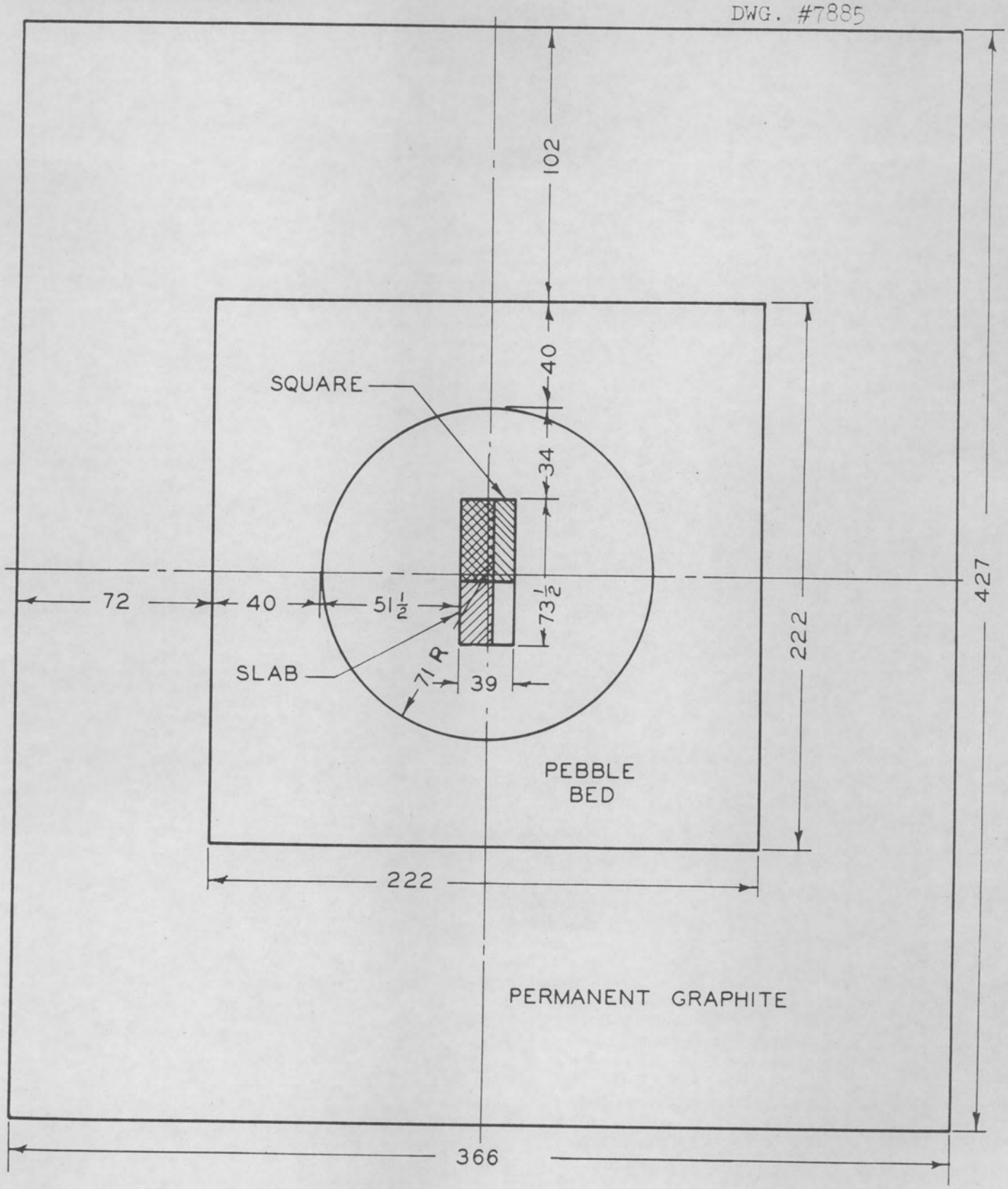

FIG. 10

HORIZONTAL CROSS-SECTION THRU REACTOR AND REFLECTOR AT CENTER OF ACTIVE LATTICE

ALL DIMENSIONS IN CM.

Calculation of the cooling of the graphite was based upon a reactor with a square loading because the greatest heat production in the graphite occurs in regions parallel to the face of the square lattice at its nearest approach to the tank wall. Neglecting the effect of conduction between pebbles, it was found that an air flow of 0.33 lb/ft^2 sec was required to maintain the ball temperature in the hottest zone below 570° F when operating at 45000 kw. This resulted in a pressure drop of 30 to 40 in. of water through the graphite and an average air flow of 0.38 $lb/ft^2/sec$. The total air flow through the pebbles was calculated to be 13.7 lb/sec, the total heat produced 420 kw, and the average exit air temperature 195° F for operation at 45,000 kw.

Recent information from the Argonne National Laboratory indicates the pressure drop through the pebble bed will be about 35 in. of water. Their tests also show that the heat transfer coefficients may be greater by a factor of five than those used in the design calculations. This would result in a maximum pebble temperature of ~490° F; however, uncertainies involved in the experiment appear to make unwise any reduction in air flow based solely on the greater heat transfer coefficient.

The proposed design of the cooling channels in the permanent graphite is similar in most respects to that of Nicoll and Leyse of the Argonne National Laboratory, modified because of different heat production data and to provide cooling of the beam hole liners by air flowing through vertical holes in the graphite as shown in Fig. 6. The locations of the ½ in. diameter vertical cooling holes and the zoning of the reflector are shown in Fig. 11. Calculated maximum temperatures in zones 1, 2, and 3 are 520, 480, and 490° F, respectively, assuming a five-fold decrease in the thermal conductivity over a period of 10 years. The air flow through the holes in the hottest zone is calculated to be 8.2 lb/ft^2 sec with a total air flow through the permanent graphite of 10 lb/sec. The total heat removed is estimated to be 330 kw and the average exit air temperature to be 205° F at a pile power of 45,000 kw.

One of the problems causing some concern is that of cooling the beam hole liners. The part of each liner in the pebble zone is cooled by air flowing upward through the pebbles while the part in the permanent graphite is cooled by air which flows upward through holes in the graphite bars. The liner for the HG9 hole extends through the graphite reflector in the region of heat production perpendicular to the face of the square loading at its closest approach to the tank wall. In this position the heat production in the HG9 liner and the

[redacted]

DWG. #7886

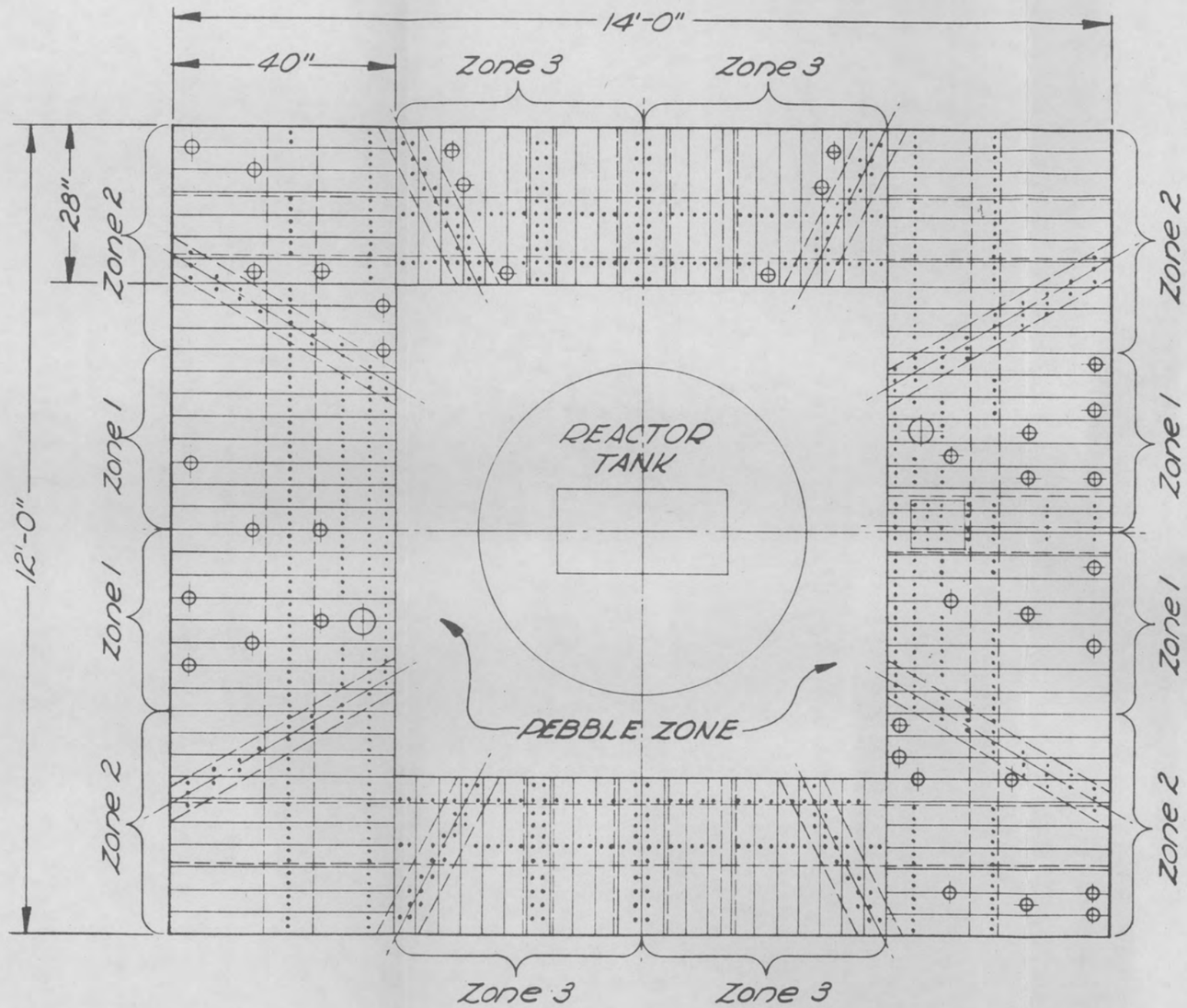

[redacted]

PERMANENT GRAPHITE ZONE
PLAN VIEW WITH LOCATION
OF COOLING HOLES

FIG. 11

temperature of the cooling air are greater than for any other experimental facility. Consequently, the first efforts have been devoted to the calculation of temperatures in that liner.

The HG9 liner is tentatively an aluminum box 10 in. × 16 in. square × 3/16 in. thick extending through the graphite from the thermal shield to the aluminum tank of the reactor. When operating at 45,000 kw it is estimated that the heat production will be 1.1 watts/cm^3 at the tank wall, 0.26 watts/cm^3 at the face of the permanent graphite and 0.004 watts/cm^3 at the thermal shield. The number of holes in the permanent graphite is specified to provide a great enough flow of air around the liner to result in an average air temperature of 175° F and a heat transfer coefficient of 8 Btu/ft^2 hr °F, as calculated using the equation

$$hD/k = 0.023\,(DG/\mu)^{0.8}\,(C_p\,\mu/k)^{0.4}$$ (McAdams, "Heat Transmission" p. 168).

The average air temperature in the pebble bed in the vicinity of the HG9 liner is calculated to be 225° F. It is estimated from an equation for heat transfer between spheres and air,

$$hD_p/k_f = 0.33\,(D_pG/\mu)^{0.6}$$ (McAdams, "Heat Transmission", p. 237),

that the heat transfer coefficient for the graphite balls in the same location will be 7.1 Btu/ft^2 hr °F. The heat transfer coefficient for the walls of the liner may be as great as that predicted for the balls or as small as that predicted by the equation of Max Leva,

$$h = 0.813(k/D_t)e^{-D_p/D_T}\,(D_pG/\mu)^{0.90}$$ ("Ind. Eng. Chem." V.39, 1947, p.859),

for heat transfer along the walls of tubes packed with spheres. A value of 3.3 Btu/ft^2 hr °F is calculated from the Leva equation.

Figure 12 shows the temperature pattern calculated for the HG9 liner neglecting the effect of heat transfer to pebbles in contact with the liner and conduction of heat through the metal to the tank wall where the contact may be poor. It is demonstrated that the maximum temperature, when operating at 45,000 kw, may be as high as 680° F or as low as 490° F depending upon the value assumed for the heat transfer coefficient. Pebbles in the same region are

SECRET

DWG. #7887

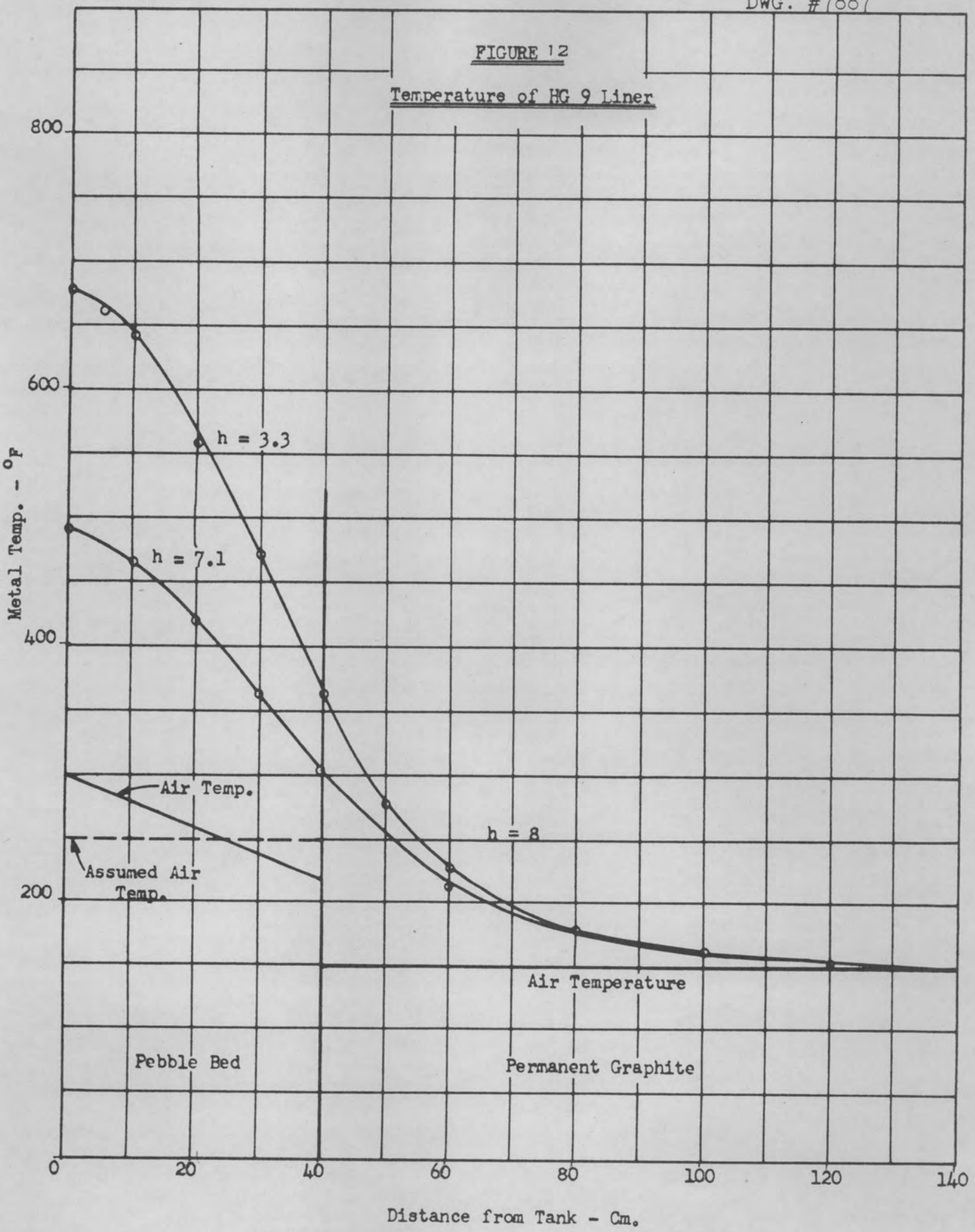

expected to assume a temperature of 570° F and so it is probable the liner will be at or near the same temperature. It is quite uncertain whether the aluminum will withstand such high temperatures for any period of time. Calculations will be made during the next quarter to determine if such temperatures are prohibitive.

Thermal Shield. The thermal shield as shown in Fig. 13, is made of 4 in., 6 in., and 8 in. thick rolled steel plates that will have the beam holes flame cut wherever possible and then welded during erection. Thermal expansion will be taken by ¼ in. to ½ in. spaces between the steel and concrete around the sides and the top. Studies are in progress to determine the effect of temperature gradient and differential expansion within the shield.

A preliminary calculation of the heat production and temperatures was made for the side thermal shields. On the basis of the heat production data of Fig. 9, and a calculated $(nv)_{th}$ of 3×10^{11} at the center of the face of the thermal shield at its nearest approach to the lattice, it was found that the maximum heat flux in the shield is 0.15 watts/cm^2 for 30,000 kw operation or 0.31 watts/cm^2 for 60,000 kw operation and the average heat flux is 25% of the maximum. This results in a heat production of 10 kw per side or a total of the order of 60 kw when operating at 60,000 kw. Production of heat is about equally divided between absorption of pile and reflector gammas and absorption of capture gammas in the steel.

Assuming the validity of the above values the following data were calculated for the section of thermal shield adjacent to the graphite considering a total air flow of 1600 lb/min.

GAP BETWEEN THERMAL SHIELDS	h Btu (hr ft^2 °F)	PRESSURE DROP (in. H_2O)	ΔT MAX. (ABOVE AIR TEMP)	ΔT AVG. (ABOVE AIR TEMP)
1 in.	15	2.1	62° F	19° F
2	7.8	0.28	110	34
3	5.2	0.11	160	53
4	4.0	0.05	210	67

The values for ΔT max. are somewhat high because only a partial correction was made for conduction of heat in the steel, and so the values will be recalculated. Since the heat production in the outer section of thermal shield adjacent to the concrete is lower by a factor of about 20 than in the section

RESTRICTED

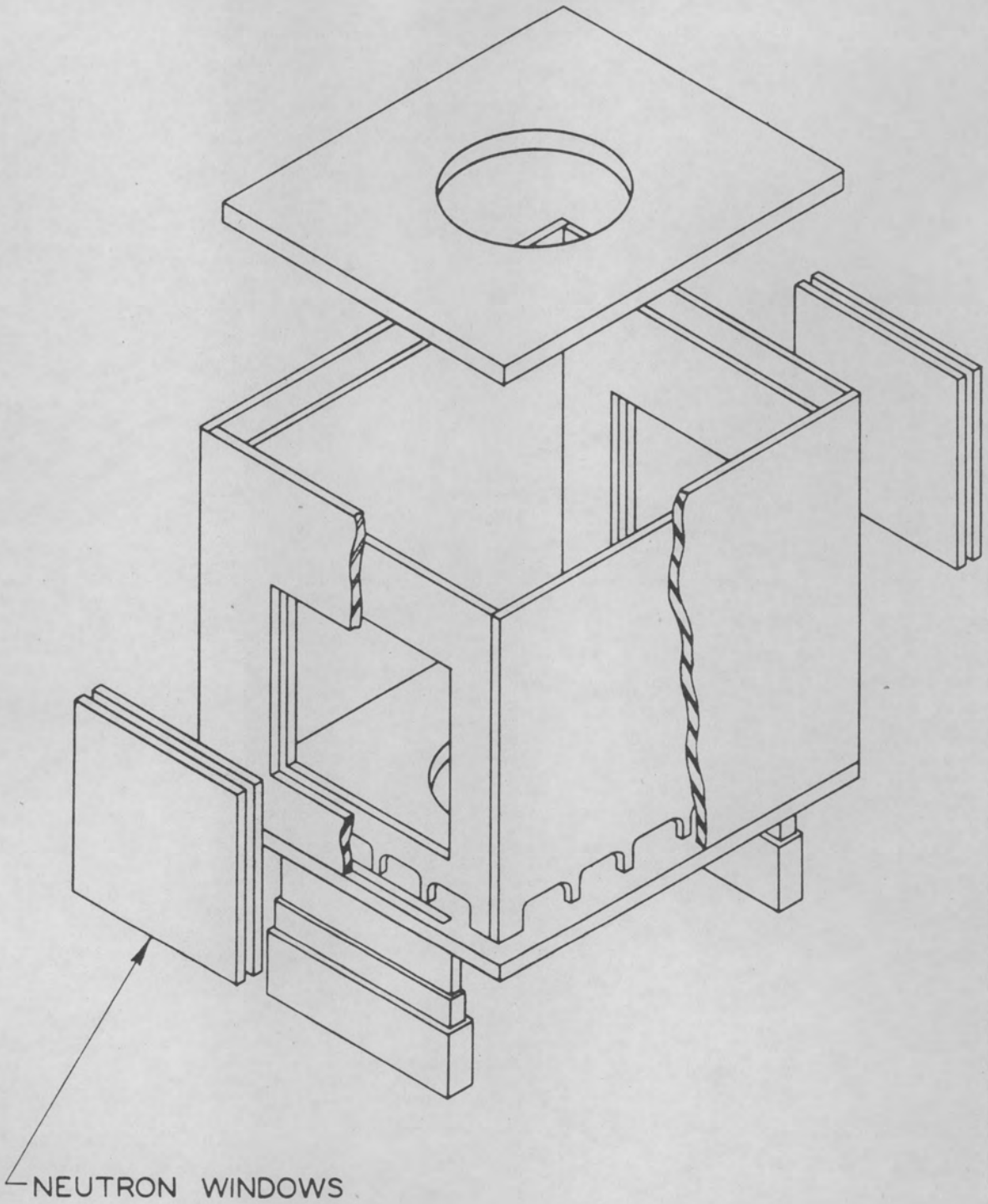

FIG. 13
THERMAL SHIELD ISOMETRIC

adjacent to the graphite, correspondingly lower temperatures can be expected. Although some decrease in temperature can be realized by decreasing the air gap between the sections of thermal shield, three inches is being held as the design thickness.

Two materials, lead and bismuth, are being considered for use in the neutron window between the graphite and thermal column. Little is known about the physical properties of either of these materials at temperatures between 150 and 300° F. Creep experiments are being planned to provide information on this problem.

A curtain of material having high cross section for thermal neutrons was designed which may be inserted by remote control between the permanent graphite and the thermal column. Material proposed in this design is boral, a newly developed material of B_4C and aluminum (ORNL 323).

Thermal Column. A vertical section through the thermal column as it is presently conceived is shown on Fig. 14. The steel shell is butt welded and takes the form of three telescoping boxes. The dimensions increase from 6 ft. × 6 ft at the thermal shield to 6.33 ft × 6.33 ft at the outer face of the concrete. The steel shell serves to reduce the gamma heating in the concrete in a similar manner to the thermal shield. The shell is lined first with a 0.040 in. boral sheet, and then a 2 in. lead liner. The boral serves to absorb the slow neutrons that would otherwise pass into the steel and concrete. The lead liner will provide shielding from the induced activity in the steel shell in the event that one wishes to enter the column after shutdown.

The lead door as shown is 10 in. thick, which is sufficient to reduce the gamma activity to biological level outside the door. These gammas consist mostly of graphite gammas from the thermal column itself.

The column is closely packed with graphite blocks which may be removed during pile shutdown. The basic size of the blocks is 4 in. × 4 in. × 20 in. Since the penetrating experimental facilities are of rectangular shape and oriented parallel to the pile-co-ordinates, little difficulty is expected in the detail design and application of these blocks.

Controls. 1. **Position Indicators.** A redesign of the position indicators was made to provide direct reading indication and thus reduce the possibility of errors in reading and at the same time provide additional features. With this design it is possible to remove either one of the two indicators for any rod without affecting the other in the event that one of them requires servicing.

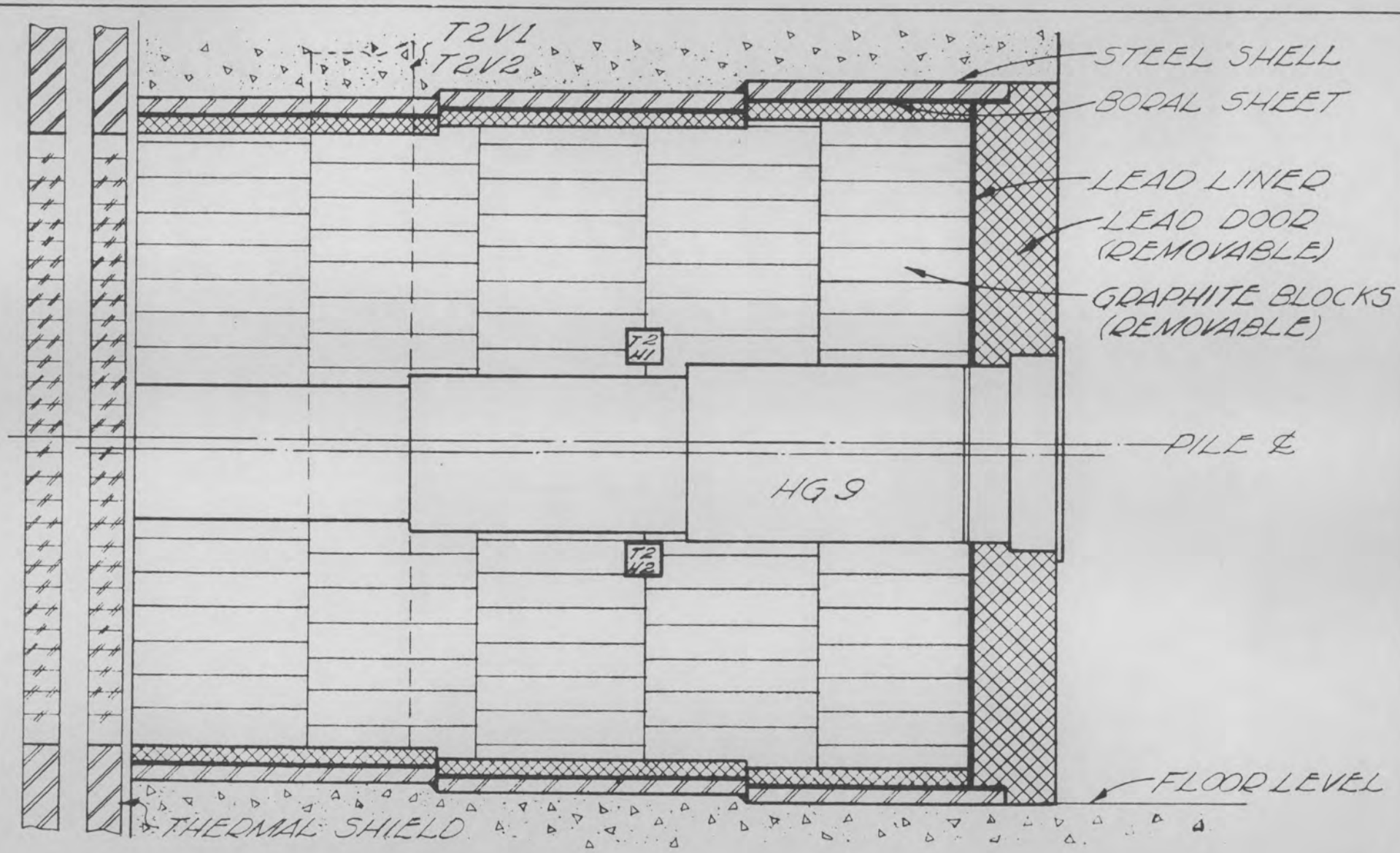

THERMAL COLUMN N-S SECTION ON PILE ℄

FIG. 14

[redacted]

DWG. #7889

A schematic drawing of the present indicator and gearing for the Shim-Safety Control Rod Indicators is shown in Fig. 15. The revised system, shown schematically in Fig. 16, provides direct reading primary indicators at the plug platform in the form of standard counters which are driven by the shim rod drive motors through a right-angle flexible shaft coupling, a flexible shaft and a pair of helical reduction gears. Since the counter is driven directly from the motor the work required of the flexible shaft is materially reduced, thus reducing the necessity for repair or replacement. The counters read directly in inches and thousandths of an inch.

The selsyn which controls the remote or secondary indicator at the operating panel is mounted on a gear housing adjacent to the shim rod housing and is driven by a train of three sets of worm gears. The secondary indicator will be of the dial type with a pointer which makes nine degrees of a revolution for each inch of rod travel or 279 degrees for the full travel of 31 inches.

In redesigning the regulating rod position indicators it was found impractical to use the direct reading counter type of indicator because of the high shaft speeds involved. However, a direct reading indicator of the dial type was designed for use as a primary indicator at the plug platform and is shown in Fig. 17. The indicator drive gearing was revised to suit the new indicator and is shown schematically in Fig. 18. The outer disc of this indicator shows the inches of travel of the rod and is driven by a geneva type reduction gear which permits the figures to remain stationary during one inch of travel. The inner disc indicates the rod travel directly in hundredths of an inch and in thousandths by interpolations, but continues rotation while the rod is in motion. One full revolution of the outer disc covers thirty inches of rod travel while the inner disc makes one revolution for each inch of rod travel. In contrast to the previous design the selsyn which controls the secondary position indicator at the console is driven by a pair of reduction gears operating from the driven bevel gear shaft, making it independent of the primary indicator drive gearing and consequently making it removable without affecting the operation of the primary indicator. Other details of the gearing may be seen by referring to the indicator drive schematic.

2. **Shim Safety Control Rod Bearings.** To reduce the frictional drag caused by the graphite pads in the Shim-Safety Control Rod Bearings, a new bearing was designed incorporating rollers in place of the graphite pads. This design is illustrated by Fig. 19, and is similar to the previous design except that in each of the four spring plates three stainless-steel-encased graphite

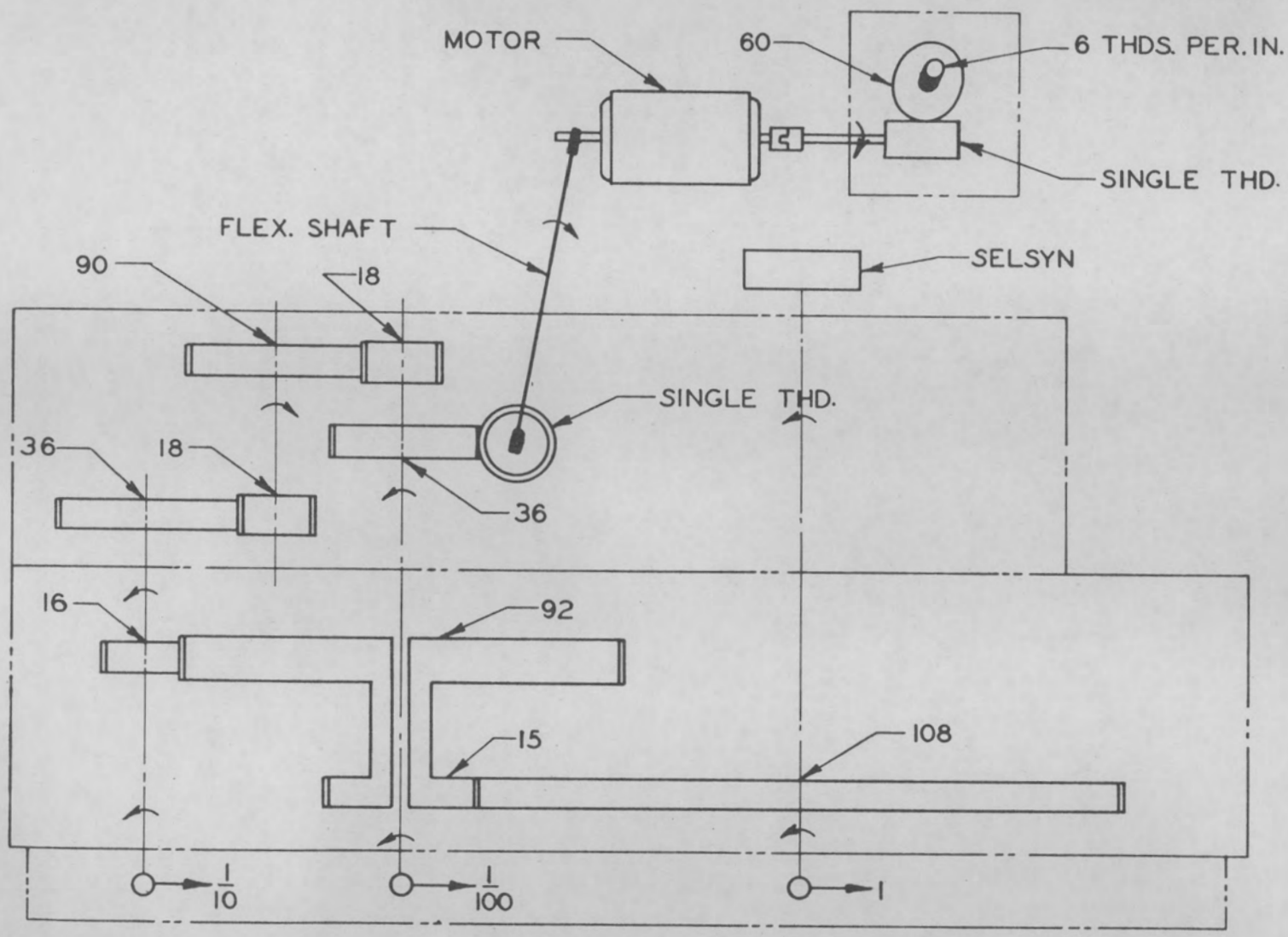

FIG. 15
SCHEMATIC DIAGRAM OF EXISTING
SHIM ROD POSITION INDICATOR MECHANISM

DWG. #7890

RESTRICTED

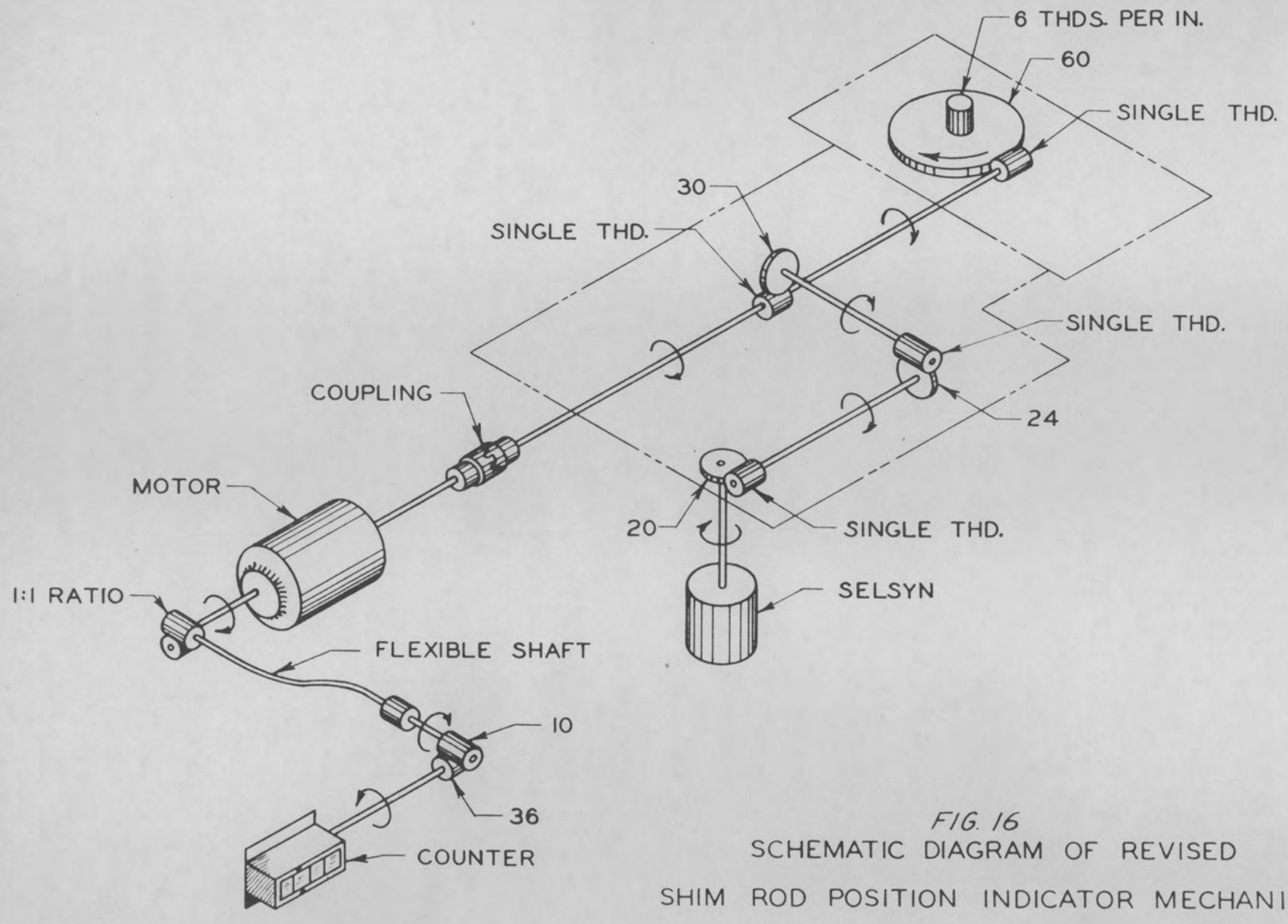

FIG. 16
SCHEMATIC DIAGRAM OF REVISED
SHIM ROD POSITION INDICATOR MECHANISM

DWG. #7891

[redacted]D

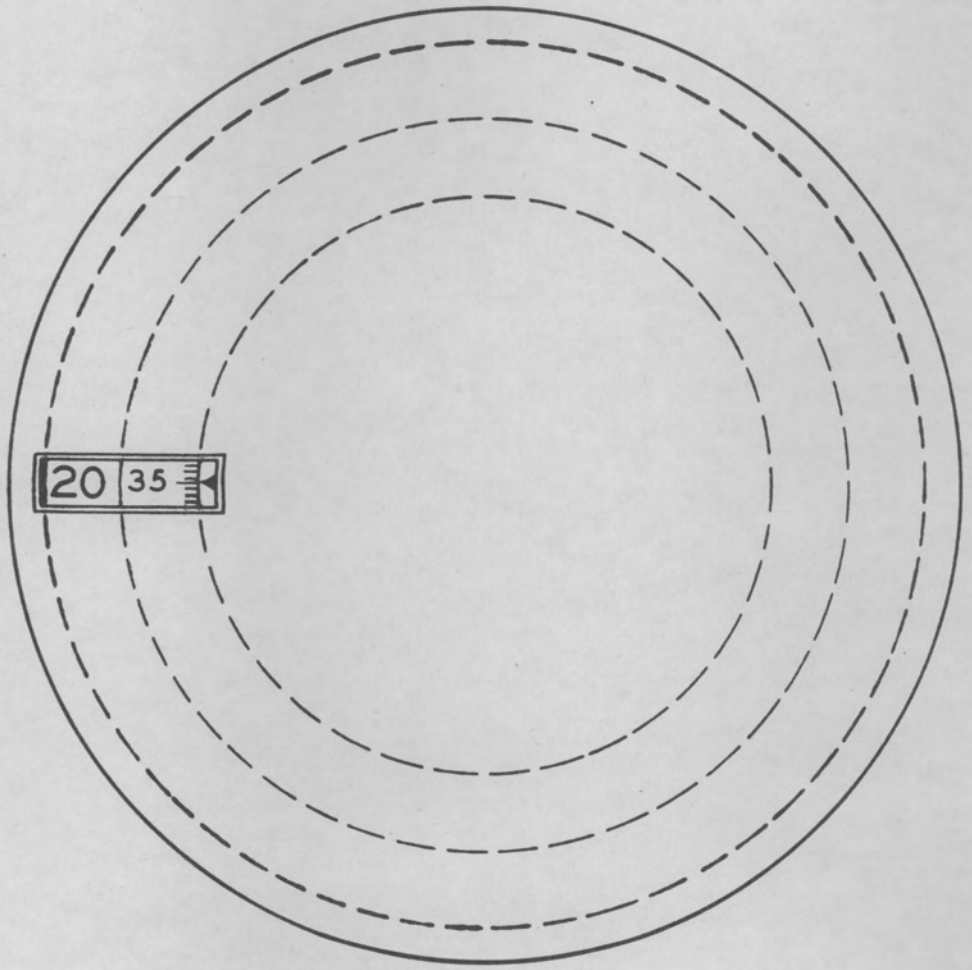

FIG. 17
DIRECT READING DIAL TYPE POSITION INDICATOR
FOR REGULATING RODS

DWG. #7893

~~RESTRICTED~~

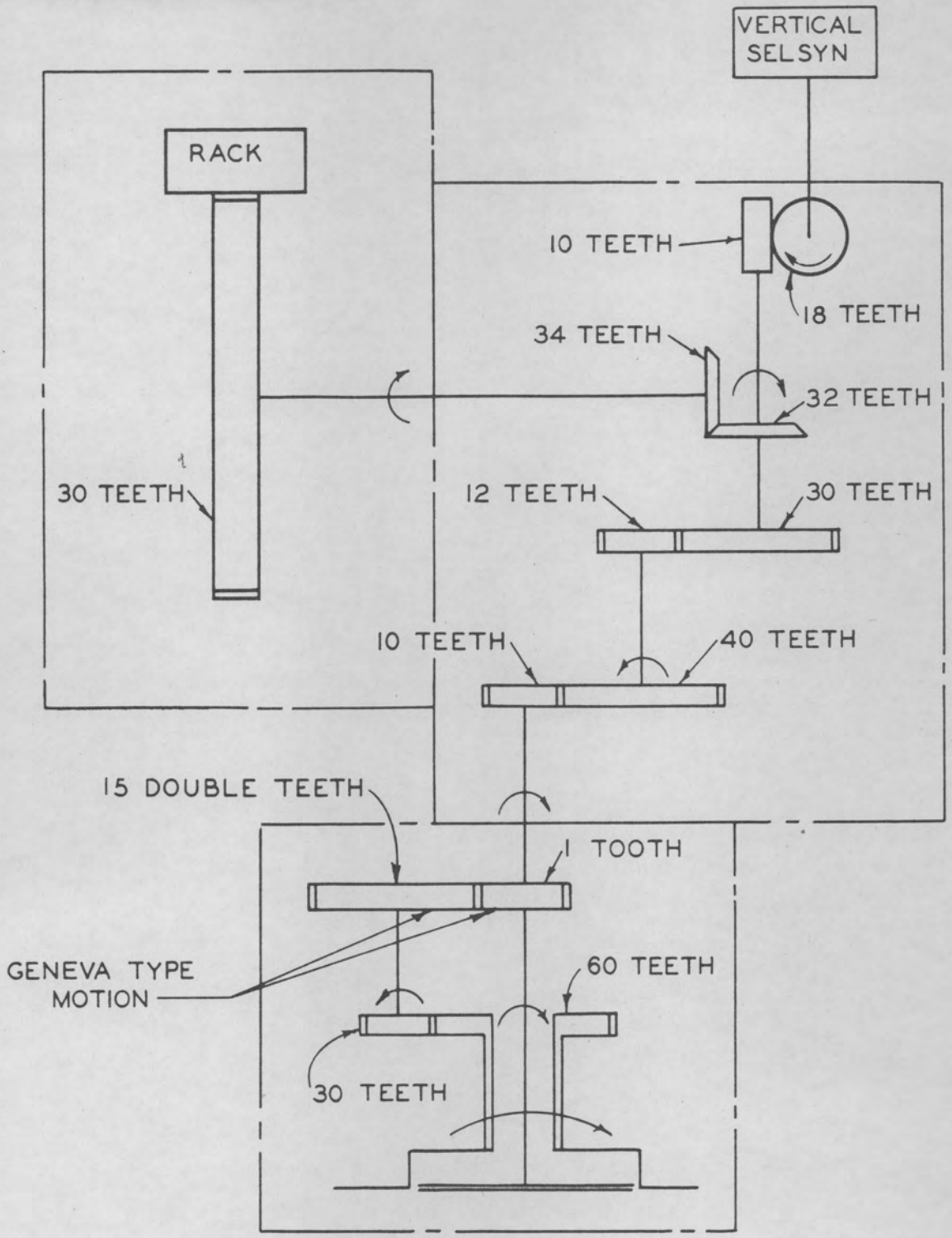

FIG. 18
SCHEMATIC DIAGRAM OF REVISED REGULATING ROD POSITION INDICATOR MECHANISM

[redacted]D

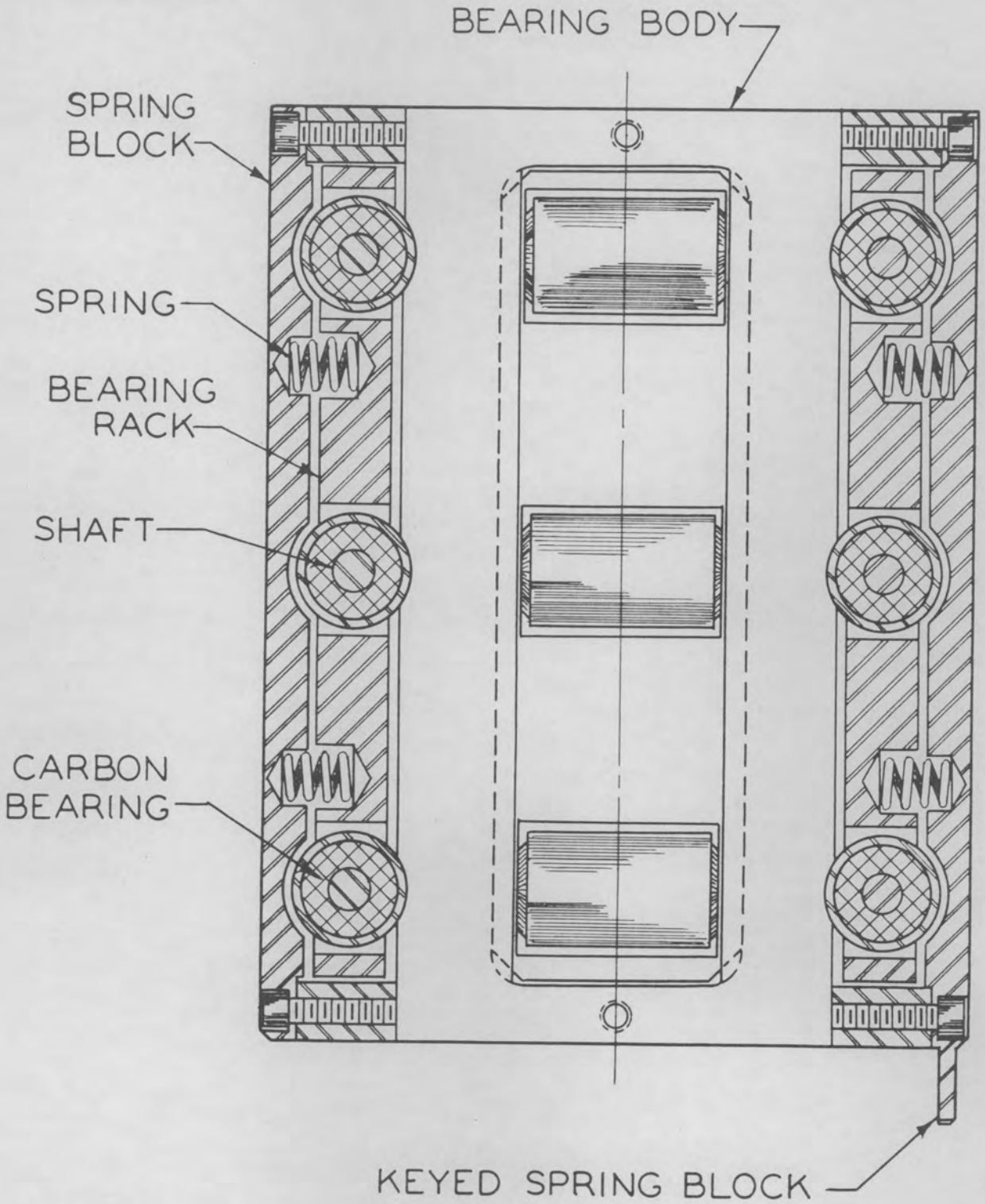

FIG. 19

SHIM ROD ROLLER BEARING

rollers are mounted. Detail drawings of this bearing were completed and a set of bearings is being constructed for test purposes.

3. **Proposed Shim Rod Design.** A new design for the shim safety rod was developed to be tested in the mock-up. Purpose of this design is to reduce the overall cost by providing a simpler means of fabrication. It consists of an extruded aluminum tube of the same outside cross section as the present shim rod extending from the armature of the top of the rod to the shock absorber at the bottom. These end pieces are made of steel fastened mechanically to the extrusion, the armature is magnetic steel, as in the present design, and the shock section is stainless steel. The uranium and cadmium sections slide inside the extrusion by removing the armature and inserting them from the top. These sections are positioned by means of spacers each of which will consist of four 3/8 in. diameter aluminum rods held in position by two X-shaped webs. Tightness of these internal parts is insured by 1/4 in. jack screws, located in each of the four corners of the armature, which tighten against four springs providing downward force against the top spacer but at the same time allowing for thermal expansion through the springs. This design reduces the total volume of uranium-aluminum alloy in the fuel section by approximately 14% as the width of all the plates is decreased slightly and there is one less plate. The cadmium section is fabricated by sandwiching a sheet of cadmium between two thin sheets of aluminum, one hard and one soft. The sandwich is welded around the outside and bent into a square tube with the soft aluminum on the outside to prevent buckling of the internal sheet. An experimental assembly of this type was successfully fabricated.

Fuel Assembly Irradiation. A carrier was designed for use in irradiating a complete MTR fuel assembly in the central vertical hole in the NRX Reactor at Chalk River. The carrier is designed to support the assembly and allow circulation of cooling water through it at a rate of 100 gpm.

ENGINEERING DEVELOPMENT

Status of The Reactor Mock-up. During the past quarter, the Mock-up tank was completely dismantled and reassembled. Hydraulic and stress-strain measuring devices were positioned, heat exchangers to cool the recirculated water were installed, miscellaneous repairs and corrections made, and the system throughly cleaned.

Operation was resumed July 8, 1949, and continued until August 3, 1949. The fluid flow data during this period indicated too great a volume of water through the reflector section of the tank. As a result, operation was suspended and all "A" pieces in the reflector removed for replacement of orienting keys, which were removed during the original assembly because of imperfect fit; a number of the "weep" holes in the lower support casting underneath the reflector were plugged. Both of these measures should result in a sufficient reduction of flow through the reflector and permit the resumption of the hydraulic study.

Cooling System for the Reactor Mock-up. The heat input of the two 350 hp motors which drive the 7,000 gpm pumps of the Mock-up is sufficient to cause boiling of the circulating water during continuous operation. To prevent such excessive water temperatures, a bank of six heat exchangers was installed.

With the coolers in use the initial temperature rise of the entire system was 7-8° F per hour. Although the equipment has been operated for longer than six hours continuously, the equilibrium temperature of the circulating water will not exceed 175° F even on the warmest days. By purging with demineralized water at a rate of 40 gpm in conjunction with the cooling system, the process water temperature can be held to approximately 150° F.

Metal Gaskets for Mock-up Tank. As discussed in the previous quarterly report the use of round wire aluminum gaskets between two smooth-faced flanges appeared promising. During the quarter this type gasket was tested a number of times in one 70 inch diameter joint of the Mock-up tank and was found to seal satisfactorily every time. The effect of thermal cycling on this joint is being investigated and if satisfactory (as expected) similar joints will be recommended for the actual reactor.

The possibility of designing removable thimbles for the reactor tank suggested study of smaller metal gaskets. Tests on 2S aluminum flanges (6 in. I.D. and 3 in. I.D.) show that a water seal (50 psi) is easily obtained when one flange has a half circle groove inscribed in its face to position the gasket and four bolts are used to connect the flanges. It was impossible

to obtain a seal using only two bolts even though the flanges are each two inches thick. The groove in one flange should make it easy to install the flange and gasket remotely.

Shim Safety Rods. 1. **Modification of Armature Section of Rod.** The difficulty of lowering the upper assembly grid on to seven or eight projecting shim-safety rods led to a modification of the armature end section of the rods to provide entrance clearance.

The armature of one rod was beveled at a 60° angle removing 3/16 inch at each edge of the top surface. Magnet holding-force tests with this reduced contact area show no detrimental effect on holding force. With the ends of all the shim rods beveled in this manner remote placement of the upper assembly grid will be less of a task.

2. **Friction in Chevron Packing Glands of Control Rod Drives.** A suggestion that the shim-safety rod magnets be relocated outside the reactor tank and above the top plug brought forth the request that a measurement be made of the friction in the water seal gland through which the rod drive shafts move.

A series of tests were made on a gland removed from the top plug of the MTR Mock-up and reinstalled in a pressure tank with water connections. A 1½ inch diameter aluminum shaft with a platform for weights on the upper end was substituted for the actual drive shaft.

Measurements were taken to determine starting friction and moving friction in the upward and downward directions. The data are plotted in Fig. 20. A force of approximately 15 pounds is required to overcome chevron friction when the shaft is started down against 40 psi water pressure. (All curves have been corrected for the water pressure force on the rod and indicate friction only.)

3. **Flexible Joint at Electromagnets.** Observations during operation of the Mock-up provide rather conclusive evidence that a flexible linkage at the electromagnets is undesirable. The random movement of one magnet connected rigidly to its drive shaft appears to be approximately 1/8 in. with 15,000 gpm water circulating. The other magnet with a flexible linkage moves sufficiently to endanger adjacent magnets, were they present.

The inherent flexibility of the long 1½ inch diameter drive shaft appears sufficient to correct slight misalignments for which the flexible coupling was originally designed.

4. **Hypersil Test Magnets.** It has been noted previously that the use of Hypersil alloy in the pole pieces of the shim-safety rod electromagnets would reduce fabrication costs and probably decrease release time. A magnet of this alloy is being fabricated for testing and is approximately 35% complete.

UNCLASSIFIED

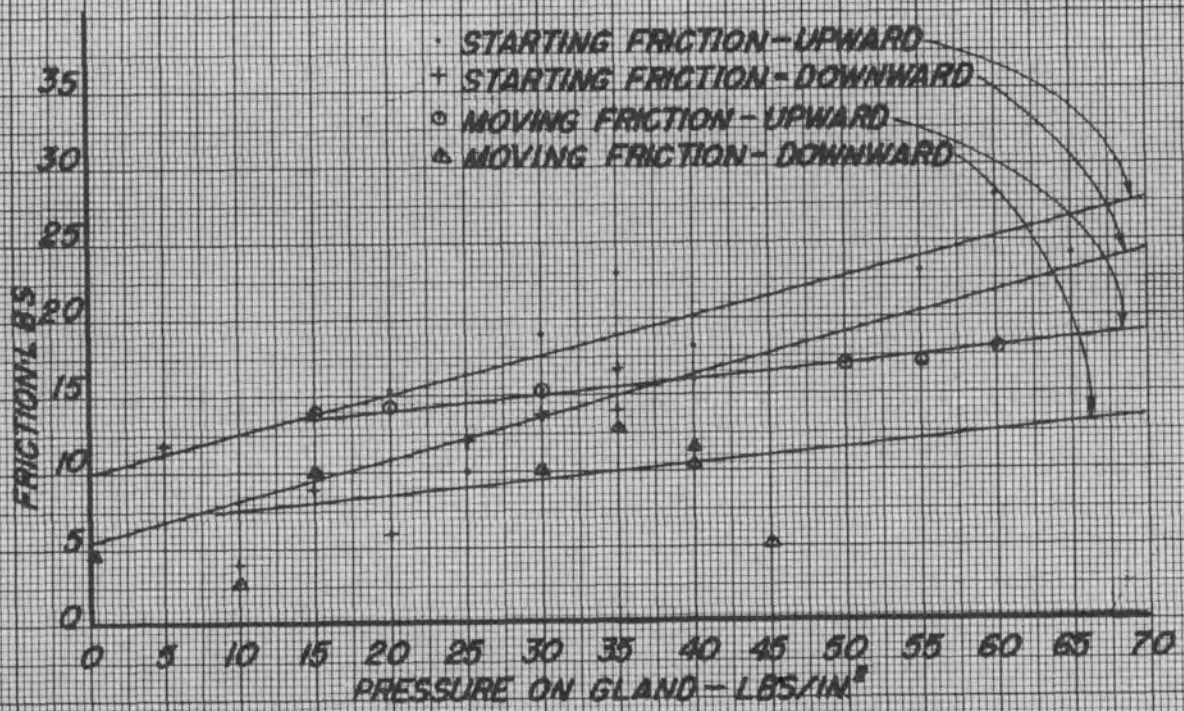

FIGURE 20

7-15-49

Drawing #7442

Control System. 1. **Shim Safety Rods.** The shim safety rods and related drive mechanisms have operated satisfactorily except for failure of the microswitches inside the cans of the electromagnets. Failure resulted from water leakage after rupture of the polyethylene shim covering the magnet pole faces. The plastic shims are being replaced with stainless steel which is known to increase the release time of the magnets to a maximum of 15 milliseconds. The use of stainless steel as a shim eliminates a weak structural point and permits venting of the magnet can to atmospheric pressure, thereby eliminating the problem of oil decomposition (under irradiation) and excessive pressures within the can. It is also likely that the troublesome microswitch inside the can may be eliminated by use of the metal shim as an electrical contactor.

Regulating Rod. 1. **Shock Absorbers.** New and stronger springs were installed in both upper and lower shock absorbers of the regulating rod drive assembly. The new springs appear to perform satisfactorily.

A quick release clamp has been attached to the upper shock absorber and saves a great deal of time when the shock absorber is removed to allow detachment of the regulating rod from its drive shaft.

2. **Galling of Rod in Lower Bearing.** During the first few hours of operation of the regulating rod the lower end of the rod galled severely in the lower bearing. During disassembly of the reflector it was found this was caused by the mislocation of the "E" reflector piece which surrounds the regulating rod. Since correctly fastening this piece in position, performance of the rod has been without mishap.

3. **Regulating Rod Response Tests.** The time for the regulating rod to reach various demand speeds will be determined during September. The tachometer has been calibrated and gives a linear response at the manufacturer's values. A Brush Recording Oscillograph and amplifier are ready for use and the necessary power supply is on hand.

The entire moving portion of the rod and drive shaft assembly was found to weigh 48 pounds, the designed weight.

4. **Device for Monitoring Water Flow through Active Fuel Assemblies.** The fuel assembly monitor tube was tested under maximum flow conditions. The microformer unit indicated good linear response to flow changes although it it was not possible to duplicate results. After several operating cycles the unit failed because of water leakage.

The results were reviewed and the details, with suggestions, reported to the design group.

Mock-up Handling Tools. A number of remote handling tools and accessories

were fabricated and tested before this quarter and were illustrated and described in the previous report. During the past quarter the effort was divided equally between fabrication of additional tools and improving the design of ones already in use. The tools tested during this quarter are described below:

UPPER SUPPORT CASTING TOOL

This item was fabricated to provide a suitable means of lifting and lowering the subject casting from the reactor. It is desirable to prevent rocking of the casting so accurate alignment of dowels and bolts on "D" tank will align with holes in the casting. To accomplish this, two stainless steel pins were located horizontally in the castings central vertical ribs so they could be contacted by a double yoke. The yoke of the lifting tool straddles the vertical ribs and contacts each pin on both sides of its center. In testing the tool, rocking was negligible and alignment was readily made by maneuvering the casting from the operating platform.

EXTENSION SOCKET WRENCH

A prototype of the wrench necessary to tighten and loosen nuts on the reactor at distances of from 12-32 feet from the top of "A" tank, was fabricated, tested, and found satisfactory. A wrench of 27 feet length was fabricated of schedule No. 80, 1½ inch iron pipe with a drive and socket welded on its ends, transmittal sufficient torque to loosen nuts tightened to above 300 ft lbs torque. The wrench was designed to retain the nut and eject it when desired. Nut retention was accomplished by means of a single coil wire spring recessed in a circumferential groove in the inside of the socket, ejection was provided by means of a plunger extending through the socket and pipe and controlled at the operating platform level.

Tests conducted thus far toward providing adequate lighting for removal and replacement of parts submerged in the reactor coolant water stream have not been successful. This is due principally to the presence of air bubbles in the turbulent region just above and below the inlet diffusers. It was shown, however, that by penetrating the air-bubble region with an aluminum tube of about 5 in. diameter that good view of small areas were obtained without underwater lighting. Work is also in progress on the use of extensive underwater lighting (about 5,000 watts) just beneath the surface to obviate the use of a tube.

Strain Measurements on Mock-up. In order to measure the stresses under operating conditions on various parts of the Mock-up, Baldwin-Southwark "SR-4" strain gages were installed at points where maximum stresses were expected. A number of strain measurements were made and the stresses calculated. (Reported in Tables 1 and 2.) Complete results are not included; however, a final report will be written in the near future.

Measurements on the inside parts of the Mock-up were taken over a period of about two weeks with only four or five hours a day of Mock-up operation. Several conditions of pressure and flow rate were used. After this period some of the gages were lost due to failure of the waterproofing material, so it was deemed advisable to remove all inside gages at this time. However, enough measurements were made to confirm results.

The gages on the outside of tank section "D" have been in use for almost four months with no sign of failure. These will be left intact and periodic readings taken during future operating periods.

TABLE 1

Tank Section D

OPERATING CONDITIONS	Flow = 14,500 gpm Top Pressure = 41 psi Bottom Pressure = 13 psi			Flow = 13,000 gpm Top Pressure = 37 psi Bottom Pressure = 12 psi			Flow = 12,000 gpm Top Pressure = 30 psi Bottom Pressure = 11 psi			Flow = 10,000 gpm Top Pressure = 25 psi Bottom Pressure = 11 psi		
	STRESS (psi)			STRESS (psi)			STRESS (psi)			STRESS (psi)		
LOCATION	Max.	Min.	Ave.	Max.	Min.	Ave.	Max.	Min.	Ave.	Max.	Min.	Ave.
6" Below Top of Tank	2145	1335	1610	1875	1365	1520	1375	1125	1250	790	400	610
3" Above Bottom Flange	1325	770	960	740	370	610	690	210	410	60	0	~0
1½" from Thimble, horizontal L	1050	370	780	1270	500	790	950	490	750			
1½"from Thimble, vertical L	1185	670	860	900	510	700	810	700	760			

TABLE 2

Side Skirt Plate and Upper Grid

	STRESS (psi)			STRESS (psi)			STRESS (psi)			STRESS (psi)		
LOCATION	Max.	Min.	Ave.	Max.	Min.	Ave.	Max.	Min.	Ave.	Max.	Min.	Ave.
Side Skirt Plate	2000	1700	1860	1200	600	930	700	700	700	800	300	570
Upper Grid, Top Surface	-1100	-700	-900	-600	-300	-450	-300	-300	-300	-400	-300	-350

NOTE: Negative value of stress indicates compression.

CORROSION OF REACTOR MATERIALS

Corrosion Product Pick-up in a Recirculating Water System. A test to observe the build-up of corrosion products in water recirculated through a system containing cast iron, stainless steel, 2S aluminum, and beryllium was continued for a period of 31 days. This is a continuation of a 21 day test reported previously. The water was recirculated at a *p*H of about 6.0 to 6.5, a temperature of 60° C, H_2O_2 concentration of 0.005 *M*, and a flow rate of about 100 gpm. Daily samples were taken to measure Fe and Al pick-up. No make-up water was added to the system during the test. The water volume decreased from about 467 gallons at the start to about 224 gallons at the end. Sampling and small leakages which were not easily eliminated accounted for the loss of 243 gallons during the 31 day period. No make-up was added to replace this loss because it was desirable to measure Fe and Al corrosion by the water analysis. However, in the recirculating stream, no measurable increase in Fe and Al could be detected. Apparently, the formation of protective oxide film was completed during the first 21 day test.

The suction pipe of the pump is located about 3 inches above the bottom of the tank which provides a stagnant heel where flocs of iron and aluminum oxide can settle. At the conclusion of this test, scattered particles of material floating around in the bottom of the tank were collected and analyzed for iron and aluminum. A corrosion rate of 0.021 mils/mo was obtained for the cast iron, assuming no Fe pick-up from the stainless steel. The initial corrosion of the cast iron was probably inhibited by an asphatum base coating. A corrosion rate of 0.052 mils/mo was obtained for the 2S aluminum.

Four replaceable beryllium assemblies mounted in a 2S aluminum tank in this system exhibited satisfactory corrosion resistance after an exposure of 52 days to water flowing at a velocity of 4 ft/sec. These assemblies contained numerous small pits in the beryllium metal when received from the machine shop. It is believed this occurred during machining due to non-homogeneity of the metal. During the test these pits exhibited little tendency to expand with a few small barnacle formations. No cracking or splintering was observed. All of the cooling channels were open.

Beryllium. **Corrosion of a Replaceable Beryllium Assembly.** A replaceable beryllium assembly (Class II) has exhibited no significant corrosion when exposed for 10 months to demineralized water moving at a velocity of 15 ft/sec.

This test is a continuation of work previously reported. The water conditions are as follows: temperature 88-90° C, 0.005 *M* in H_2O_2, and a *p*H range of 6.0 to 6.5. The 1/8 in. diameter cooling channels have remained bright and free from corrosion products. No pitting, splintering, or interfacial corrosion deposit was observed.

High Temperature Beryllium Corrosion Data. The results of all high temperature beryllium corrosion tests are summarized in Table 3. The material histories are shown in Table 4. These tests were conducted in demineralized water at 515-525° F and 780-840 psi absolute pressure for 384 hours. The water *p*H changed from 5.5 to 7.8 during the course of the tests.

The six types of beryllium exhibiting the best corrosion resistance are arranged below in a decreasing order of resistance to the above conditions.

Sample 2, extruded beryllium
Sample 8, QM beryllium
Sample 13, extruded beryllium
Sample 12, extruded beryllium
Sample 6, extruded beryllium
Sample 17, QM Beryllium

High temperature corrosion tests at 585° F in demineralized water will be continued upon completion of the autoclave installation at Bldg. 9204-1, Y-12, in the near future.

QM Beryllium Corrosion. Sixty day corrosion tests in simulated MTR cooling water have been completed and evaluated for uncoupled QM beryllium and QM beryllium coupled to 356T-7 aluminum and 2S aluminum. Corrosion data on the QM beryllium were comparable with corrosion data obtained on extruded metal exposed to similar conditions. An interim report on these studies will be issued in the near future on Lots 1 through 4 as listed in J. L. Gregg's memo, CF 49-4-144, "Brush Hot-Pressed Beryllium for Corrosion Tests".

TABLE 3

The Stagnant Corrosion of Various Tubes of Beryllium Metal at 515-525° F and 780-840 psi A Pressure in Demineralized Water for 384 Hours

SAMPLE NUMBER	SPECIMEN AREA (cm^2)	REMOVED WEIGHT GAIN (mg/dm^2)	MAX. PIT DEPTH (mils)	MAX. PIT DIA. (mils)	PITS per cm^2	DEFILMED WEIGHT LOSS (mg/dm^2)	EQUIVALENT THICKNESS (mils/month)
1	34.82	-75.20	85	240	6.4	313.80	1.888
2	12.61	1.58	neg.	neg.	neg.	+0.79	---
3	59.85	--	portions of sample disintegrated			1318.00	5.010
4	52.91	78.15	76	60	2.8	+0.19	---
5	34.94	0.29	neg.	neg .	neg.	8.86	0.031
6	77.85	2.57	14	60	0.9	2.31	0.009
7	27.25	731.5	sample badly blistered and pitted			---	---
8	18.80	1.60	4.4	20	10.6	+0.53	---
9	19.68	-5.08	13.6	30	17.1	7.63	0.031
10	9.66	-41.35	neg.	neg.	neg.	53.75	0.213
11	26.83	-57.75	1.2	20	2.8	77.80	0.307
12	114.30	16.25	1.2	20	1.1	2.54	0.001
13	114.25	22.05	1.2	20	1.6	2.01	<0.001
14	148.40	no data	8.0	60	0.5	no data	---
15	148.10	no data	8.0	120	4.4	no data	---
16	50.13	45.75	10.4	60	8.0	+38.50	---
17	178.45	--	6.8	60	4.3	5.65	0.022

TABLE 4

History of Beryllium Test Specimens Used for High Temperature Corrosion Tests in Table 3

SAMPLE NUMBER		HISTORY
1	Q PROCESS BERYLLIUM	received from Brush Beryllium Co., early 1947; received in machined condition, size ¼ in. x 1 in. x 2 in.; density, 1.802; no chemical analysis available.
2	EXTRUDED BERYLLIUM	received from MIT, late 1946; received as 1-1/8 in. dia. steel-jacketed bar 5 ft. long; extrusion ratio, 16:1; density, 1.855; major portion of corrosion studies during 1946-1948 conducted with this material; no chemical analysis.
3	EXTRUDED BERYLLIUM	received from MIT early 1947; received as 3 in. dia. bar; extrusion ratio, 6:1, samples machined to ¼ in. thick x 2¼ dia.; showed poor machining qualities; density, 1.851; no chemical analysis.
4	EXTRUDED BERYLLIUM	received from MIT in 1947 in machined condition, size ¼ in. x 1¼ in. x 2¼ in.; density, 1.85; history unknown.
5	QM BERYLLIUM	received from Brush Beryllium Co., in 1949; Billet 4382BPQM; size 3/16 in. x 1-1/16 in. x 2 in. machined from 1 in. x 4 in. x 6 in. block; density, 1.849.
6	EXTRUDED BERYLLIUM	received from MIT in 1949; Billet 788; extrusion ratio, 6.5:1; specimen cut 6 in. back on 'A' end; H_2SO_4 etch disclosed cracks.
7	EXTRUDED BERYLLIUM	from MIT; machined from 1-1/8 in. dia. bar; history unknown; machined specimen blistered during 6 months exposure to air; density, 1.86.
8	QM BERYLLIUM	from Brush Beryllium Co.; material described in J. L. Gregg's memo of April 14, 1949 (CF 49-4-144) as Lot 3, Bar 6.
9	QM BERYLLIUM	from Brush Beryllium Co.; material described in CF 49-4-144 as Lot 4, Bar 7.
10	EXTRUDED BERYLLIUM	bolt material from MIT; extrusion ratio, 16:1; annealed condition; density 1.858.
11	QM BERYLLIUM	from Brush Beryllium Co.; magnesium content, 1750 ppm.; described in CF 44-4-144 as Lot 2.
12	EXTRUDED BERYLLIUM	from MIT; 3-3/16 in. dia.; sample cut off 'B' end of Billet 71.
13	EXTRUDED BERYLLIUM	from MIT; 3-3/16 in. dia.; sample cut off 'B' end of Billet 81.
14	EXTRUDED BERYLLIUM	from MIT; size 3½ in. x 3½ in.; sample No. 1 from A-3 section on Billet A-59.
15	EXTRUDED BERYLLIUM	from MIT; size 3½ in. x 3½ in.; sample No. 1 from A-3 section on Billet A-812.
16	CAST BERYLLIUM	from MIT; sample cut from 55 lb. experimental casting; sample size ¼ in. x 1 in. x 3 in.
17	QM BERYLLIUM	from Brush Beryllium Co.; Billet 4373 BPQM; sample cut from Section 5; sample size 1 in. x 1 in. x 3 in.

CHEMICAL ENGINEERING RESEARCH

LIQUID METALS HANDBOOK

Editors for all sections of the handbook were appointed and first drafts of the sections are scheduled to be completed during September, 1949.

The editors are:

Physical and Chemical Properties
R. R. Miller - Naval Research Laboratory

Analysis, Purification, and Small Scale Handling
C. B. Jackson - Mine Safety Appliance Company

Large Scale Handling
K. D. McMahon - General Electric Company, KAPL

Corrosion
L. R. Kelman - Argonne National Laboratory

Heat Transfer
R. N. Lyon - Oak Ridge National Laboratory

Availability
R. N. Lyon - Oak Ridge National Laboratory in collaboration with U. S. Bureau of Mines

Utilization
D. L. Katz - University of Michigan

Editor in Chief
R. N. Lyon - Oak Ridge National Laboratory

HEAT TRANSFER STUDIES

ORNL 156, a critical survey of project heat transfer experience, was abridged for declassification and brought up to date. As soon as the rough drafts are edited, it will be submitted for declassification.

A meeting for closer intra-project coordination of heat transfer problems and research sponsored by ORNL was attended by representatives from most of the project sites, including NEPA and the Navy, on July 28. Subsequent revision of ORNL 156 (see paragraph above) will be aided by these representatives. The group plans to meet again in January, 1950.

Liquid Metal Studies. Experimental work on liquid metals was suspended temporarily.

Heat Transfer in Annuli. Professor R. V. Bailey from the University of Mississippi is spending the summer working toward the development of a theoretical expression for heat transfer in annuli. This has particular application in the analysis of experimental data with liquid metals.

A general equation was developed, but determinations of numerical values is being held up during the development of relationships regarding the velocity distribution and eddy diffusivity in annuli.

Fluid Flow Studies. A limited effort was put on fluid flow studies and simple equipment has now been set up to study turbulence in rectangular channels.

ENGINEERING PROPERTIES OF IRRADIATED MATERIALS

The work during this quarter by the Technical Division on the determination of the engineering properties of irradiated materials was directed toward several intermediate objectives:

1. The establishment of a new materials testing laboratory at Y-12.
2. The design and construction of a high intensity gamma ray source.
3. Design and installation of hydride irradiation equipment in the ORNL reactor.

4. Determination of the fast neutron spectrum of the test hole in the ORNL reactor.
5. Determination of the relative damage brought about by beta particles as opposed to gamma rays.
6. Determination of the engineering properties of oils and plastics previously subjected to 2×10^8 R of gamma radiation.
7. Irradiation of other samples.

Materials Testing Laboratory. The new materials testing and radiation laboratory at Y-12 has been completed and the equipment is being installed. A Baldwin 120,000 lb Universal Testing Machine has been equipped for tensile, compressive, flexural, and shear tests. Other equipment, which is already installed or will be installed in the near future, will provide facilities for the following tests: impact strength; Rockwell hardness; Shore hardness and elasticity; light transmission and haze; arc resistance; volume resistivity; dielectric strength; specific gravity; water absorption; weight and dimensional changes; Saybolt viscosity; consistency of greases; water and sediment in oils; flash and fire point; acid and base number; and gas production. All of the tests have been set up to conform as nearly as possible to ASTM standards for plastics, oils and greases, but may be used for other materials with very little change in procedure.

The laboratory will be maintained at constant temperature and humidity and all samples will be conditioned for at least one week before being tested. Lead shields were built around each piece of equipment so that samples containing up to about one curie of gamma radiation may be handled without difficulty.

High Intensity Gamma Ray Source. Design of the apparatus for exposing materials to a 10^6 R/hr gamma flux is complete and fabrication started. A mock-up of the apparatus will be built and tested before it is installed in the reactor. Construction of the mock-up is scheduled to be completed by September 15, 1949, and the final installation by November 1, 1949.

The materials will be irradiated by placing them in the center of a gold cylinder 3 in. long, 1 in. inside diameter, and 0.08 in. thick. The gold cylinder will be part of an open end magnesium can, which will be blown into the center of the reactor by air pressure. Six sources can be activated at one time. After about a week in the reactor the gold rabbits will be blown into a shielded chamber where each one will fall into a separate compartment. From these compartments, which may be rotated like the chambers of a revolver, any source may be selected and dropped into another compartment from which it

may be placed in a shield containing the test material. After about a week the source will be removed from the material and blown back into the reactor by air pressure and a reactivated source will be removed and placed around the test material. Every operation will be accomplished by remote control.

A manometer, connected to the test tube containing the test material, will indicate decomposition of the material by measuring the amount of gas evolved. The lead shield surrounding the sample will be equipped to air cool the sample if necessary, also the temperature will be recorded throughout the test.

Facilities for Hydride Irradiation. The apparatus designed in collaboration with NEPA to determine the stability of metal hydrides to reactor radiation was assembled and will be installed in the ORNL reactor. The first test will be run on titanium hydride. It is also planned to test zirconium hydride, lithium hydride, and perhaps tantalum hydride.

These materials will be placed in a small furnace and inserted in the reactor. Each sample will be sealed in a small stainless steel container which will be thoroughly purged of air and kept under a measured pressure of pure hydrogen. The equilibrium pressure will be determined for temperature up to about 300° C. The average neutron flux will be measured with a cobalt foil.

Determination of Fast Flux and Spectrum in Hole 19. To predict the damage that will be done to materials in any reactor on the basis of the data accumulated in the Oak Ridge reactor, it is necessary that the fast and epithermal flux in this reactor be known in addition to the thermal flux. The thermal flux will vary, depending on the absorbing power for thermal neutrons of the material which is being irradiated, as well as the reactor power level. Cobalt monitors are used with each group of samples to determine the average thermal flux. The fast flux will vary only with reactor power level unless the reactor loading is changed. The method by which the fast flux is being determined consists of measuring the magnitude of a nuclear reaction which is produced only by neutrons with energies above a given "threshold" energy.

The nuclear reaction is produced in a metal foil which is inserted in the test hole for a measured period of time. Upon removal, the intensity of the radioactivity due to the absorbed neutrons is measured. Adsorption cross sections for fast neutrons are generally on the order of 10^3 lower than thermal cross sections. To have the fast reaction predominate, these foils are covered with cadmium (40 mils thick) that is estimated to reduce the thermal flux by a factor of 10^6.

In the tests described here both beta and gamma activity were measured to determine the amount of radioisotopes produced in the foil. To calibrate the counters, a foil of the same area and weight (to provide the same self shielding) as the fast flux foil was made of a metal which produced the same radioactive product with thermal neutrons as the fast flux foil produced with neutrons of energies above its threshold. The pairs of foils used, and the fast and thermal reactions involved were:

	FOIL	REACTION	PRODUCT	NEUTRON ENERGY	CROSS SECTION mb	HALF LIFE OF PRODUCT
Fast Foil	Al^{27}	(n,p)	Mg^{27}	4.6*	2.8	10.2 min.
Thermal Foil	Mg^{26}	(n,γ)	Mg^{27}	Therm.	41.0	10.2 min.
Fast Foil	Mg^{24}	(n,p)	Na^{24}	6.3*	1.0	14.8 Hr.
Thermal Foil	Na^{23}	(n,γ)	Na^{24}	Therm.	590.0	14.8 Hr.
Fast Foil	Al^{27}	(n,α)	Na^{24}	8.1*	0.6	14.8 Hr.
Thermal Foil	Na^{23}	(n,γ)	Na^{24}	Therm.	590.0	14.8 Hr.

* Effective neutron energy for a fission spectrum (CF 3754).

The corresponding thermal foil was irradiated at a known thermal flux in the pneumatic hole for the same length of time as the fast foil was irradiated in the test hole. This generated the same degree of saturation in two foils. By measuring the radioactivity of the foils in the same instrument, geometric factors cancel, and the activity produced in either foil is proportional to its cross section for the neutrons effective in producing the reaction times the flux of the effective neutrons. The cross sections listed for the fast neutron reaction in the above table were obtained from report (CF 3574), and refer to the cross section of the metal for a complete fission spectrum. The reaction Al^{27} (n,p) Mg^{27} has a threshold at 3.0 Mev (ORNL 203), so only neutrons above this energy will produce the reaction. The two other fast neutron reactions which were used have even higher thresholds, so in these measurements we were concerned only with neutrons of 3 Mev and higher. The assumption was made that as a first approximation, the spectrum in the ORNL reactor above 3 Mev is similar to the appropriate portion of a fission spectrum.

Calculations from the fission spectrum reported in LA 718 show that the nv above 3.0 Mev is about 0.33 of the total flux of the fission spectrum. Thus the cross section of a reaction for the fission nv above 3 Mev would be the cross section as listed divided by 0.33. The nv above 3 Mev or $nv_{3.0}$ in the ORNL reactor was determined approximately by the following calculation:

$$nv_{3.0} = .33 \left[\frac{\text{activity}}{\text{cross section} \times \text{no. of atoms}}\right]_{\text{fast foil}} \times \left[\frac{nv \times \text{cross section} \times \text{no. of atoms}}{\text{activity}}\right]_{\text{thermal foil}}$$

Using the three fast foils and comparing the results with the previously measured thermal flux in hole 19 the values for the ratio of thermal flux to $nv_{3.0}$ at the middle of hole 19 were:

REACTION	EFFECTIVE ENERGY (Mev)	$nv_{thermal}/nv_{3.0}$
Al^{27} (n,p) Mg^{27}	4.6	72 ± 30%
Mg^{24} (n,p) Na^{24}	6.3	51 ± 20%
Al^{27} (n,α) Na^{24}	8.1	46 ± 20%

The above results were obtained at a pile power level of 3800 KW and also at a power level of 2,500 KW. The agreement between the Mg^{24} (n,p) Na^{24} reaction and the Al^{27} (n,α) Na^{24} reaction is well within the experimental error and the knowledge of the cross sections. The deviation of the Al^{27} (n,p) Mg^{27} may also be due to errors in cross section measurement for both thermal and fast neutron reactions, or it may indicate a slight depletion of neutrons with energies between 3-4 Mev.

Tentative values for $nv_{3.0}$ as a result of these experiments are:

	$nv_{3.0}$	
At the middle of hole 19	6.0×10^3	n/sec. watt cm^2
28 inches from middle of hole 19	6.0×10^3	n/sec. watt cm^2
60 inches from middle of hole 19	5.8×10^3	n/sec. watt cm^2
92 inches from middle of hole 19	3.1×10^3	n/sec. watt cm^2
At pneumatic tube terminal	3.4×10^3	n/sec. watt cm^2

More complete knowledge of the reactor spectrum will be obtained upon the completion of additional tests using the P^{31} (n,p) Si^{31}; Si^{30} (n,γ) Si^{31} pair of reactions and the S^{32} (n,p) P^{32}; P^{31} (n,γ) P^{32} pair of reactions. The fast neutron reactions of these pairs have thresholds of 1.4 Mev and 1.6 Mev, respectively.

A method described in CP 3781 is being used to calculate the epithermal flux up to 1 Mev using cadmium ratio values given in MonC 398.

Relative Effects of Beta and Gamma Irradiation. If a relationship can be definitely established between the effects caused by beta irradiation and those caused by gamma irradiation, the prediction of material behavior in radiation will be easier and the testing of materials will be shortened and simplified, since gamma, beta, or mixed radiation could be used interchangeably in the tests. Experiments designed to determine that relationship were attempted using as a measure of irradiation effect the oxidation of ferrous ion to ferric ion in a solution of ferrous ammonium sulfate. Unforeseen analytical difficulties have prevented successful experiments so far, but the original difficulties were eliminated and the work is expected to be completed during the next quarter.

Properties of Gamma Irradiated Plastics and Oils. Samples of silicone oils, askarel oils, and plastics were subjected to gamma radiation from Hanford slugs for about 6 months. The total radiation dosage was 1.93×10^8 R. The silicone oils became solid and produced some gas. Askarel, and trichlorbenzene showed no visible change and produced no gas. The plastics have not been conditioned so no tests have been run. It was noted, however, their appearance was about the same as if they had undergone a few days of reactor irradiation. The results are tabulated below:

Fluorothene	- Became quite brittle - broke on handling.
Polythene	- Became amber colored, but no other apparent change.
Saran	- Became black, but no other apparent change.
DC 200 fluid - SAE20	- Became solid - about the consistency of wax. Produced 5.31 cc gas per gram of oil (@ 760 mm Hg, 25° C).
DC 200 fluid - SAE50	- Became solid - about the consistency of wax. Produced 6.39 cc gas per gram of oil (@ 760 mm Hg, 25° C).
DC 550 fluid	- Became gelatinous. Produced 6.37 cc gas per gram of oil.
Trichlorbenzene	- No apparent change. Produced no gas. Seemed to have used up the oxygen that was in the ampule (about 1 cc).
Askarel (40% trichlorbenzene, 60% chlorinated diphenyl)	- No apparent change. Produced no gas. Seemed to have used up the oxygen in the ampule (about 1 cc).

Other Irradiations. A considerable number of reactor irradiations were made during the last period, but most of these specimens have not been tested because the equipment was being moved to Y-12. About thirty different types of plastics have been procured. These represent a good coverage of the field of commercial plastics.

Reactor irradiation of oils and greases was temporarily suspended to have more space in the reactor for other materials. The tests will be resumed during the next period.

SOLVENT EXTRACTION

The first draft of a report on experimental investigation of the factors influencing dropwise liquid-liquid extraction has been completed. The final report will be completed during the next quarter.

In these studies acetic acid was extracted from various organic solvents into water. Relationships between the variables were established for the turbulent and transition regime of droplet fall.

Under the turbulent regime the overall coefficient can be predicted by the equation:

$$\frac{K_o\, d}{D_i} = 0.03\, A \left[\frac{V \rho_d d}{\mu_d}\right]^{0.8} \left[\frac{\mu_d}{\rho_d\, D_i}\right]^{0.44} \left[\frac{V^2\, \rho_c^2}{I.T.}\right]^{0.8}$$

where: K_o is the overall mass transfer coefficient

- d is the drop diameter
- D_i molecular diffusivity
- μ_d viscosity of discontinuous phase
- μ_c viscosity of continuous phase
- ρ_d density of discontinuous phase
- ρ_c density of continuous phase
- I.T. interfacial tension
- V velocity of drop
- A an association correction factor $= \frac{2 - n}{n}$
- n degree of association of solute in the solvent.

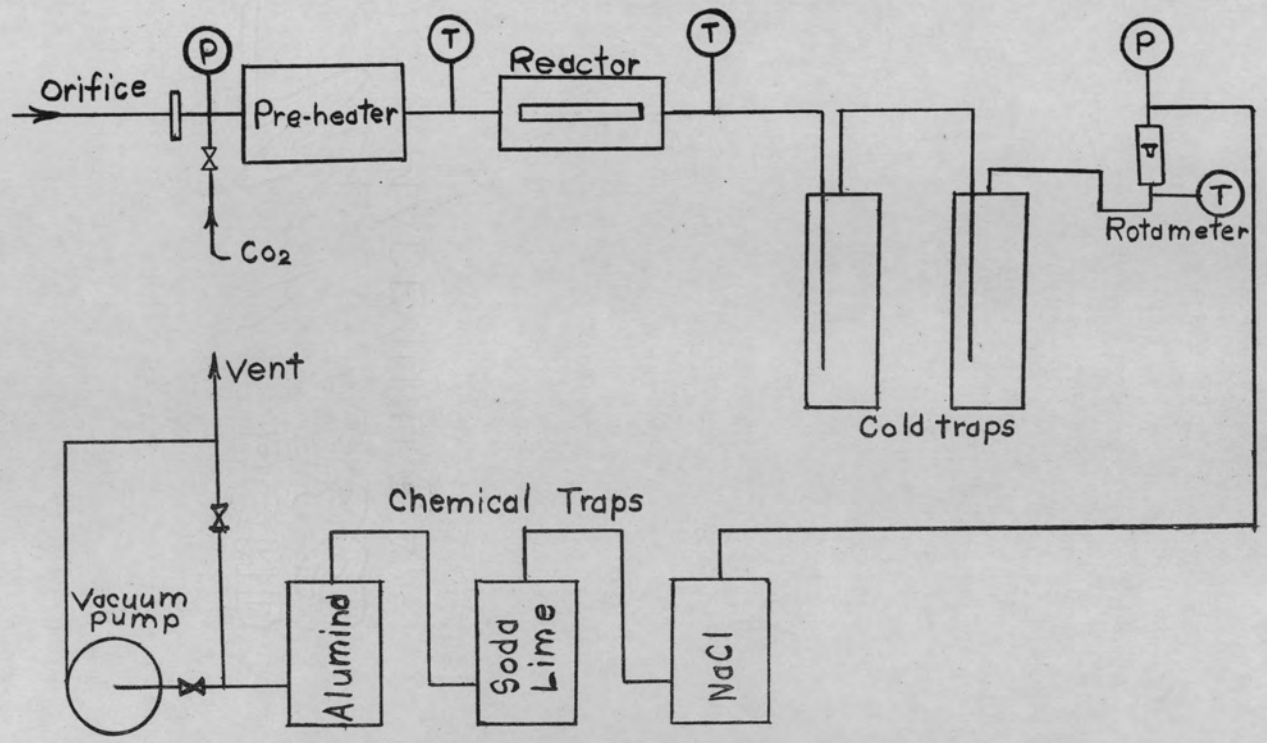

FLOW SHEET
SLUG FLUORINATION SYSTEM
FIGURE 21

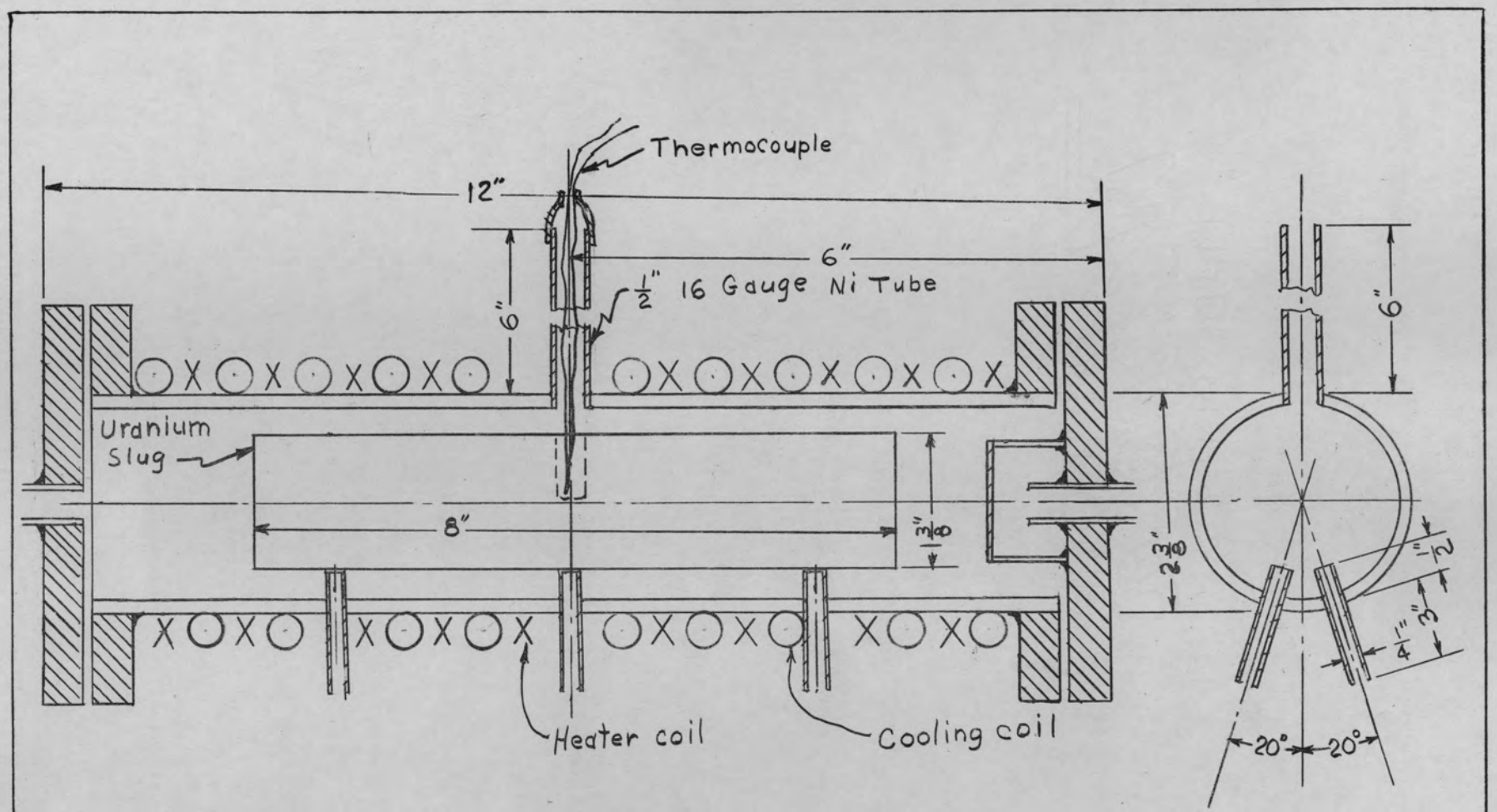

SLUG FLUORINATION REACTOR

FIGURE 22

Under the transition regime (Reynolds modulus from 100 to 300) the rate of extraction can be predicted by the laws of molecular diffusion.

A literature search on transfer across a static liquid—liquid interface is nearly completed. It will be followed by a limited experimental program to study the variables involved in a static system.

DRY FLUORIDES

A dry fluoride process has long been seen as a possible means of separating uranium, plutonium and fission products from each other by taking advantage of differences in vapor pressure of the various fluorides involved. A direct approach to the problem is to fluorinate completely an irradiated slug of uranium, collecting the fluorination products in one container and studying separations affected by fractional distillation or other means.

K-25 personnel have been collaborating with X-10 people in the problem of developing satisfactory equipment and procedures for fluorinating of a Hanford-size slug to UF_6. A system has been installed at K-25 and a few initial tests have been conducted in which a full size Hanford slug (not irradiated) has been exposed to pure fluorine under various conditions.

The flow sheet of this system is shown in Fig. 21.

The slug core temperature was measured by a thermocouple well inserted into a 1 in. deep hole drilled in the middle of the slug perpendicular to the long axis (Fig. 22).

In the first fluorination experiment using a Hanford slug weighing 7.9 pounds, the slug surface was cleaned to bright metal using hot nitric acid (1:1) to dissolve the oxides. It was rinsed with water, dipped in methyl alcohol, dried in air, installed in the reactor and immediately blanketed with CO_2 to prevent surface oxidation by air.

The reactor was heated and fluorine feed begun at a rate of 0.010 cfm (283 cc/min) when the slug core temperature was 480° F. There was no apparent reaction until the slug core temperature reached 570° F. The reaction continued for 8 minutes, during which time the slug core temperature reached a value of about 620° F.

The fluorine flow was then increased to 0.030 cfm and the slug core temperature rose to 1150° F in 25 minutes. The thermocouples in the walls at

the bottom of the reactor were reading essentially reactor wall temperatures, which dropped from about 650° F to approximately 500° F when a trickle of cooling water was passed through the coils, and finally down to < 200° F when the water was turned on full.

The fluorine flow was then increased to 0.111 cfm, and the slug core temperature rose from 1150° F to 1380° F in six minutes. No excess fluorine was measured by the exit rotameter, which has a range of 0.0018 to 0.016 cfm.

The fluorine flow was decreased to 0.064 cfm and the slug core temperature decreased to approximately 1200° F and appeared to be constant at this value. The reactor wall temperatures were about 150° F.

The system was operated at this flow rate and temperature for 30 minutes before shutting down. According to the fluorine flow rates and times, an estimated 1.08 pounds of uranium should have been converted to UF_6 at this point.

When the reactor was opened, it was found that the slug, or some of its fluorination products had melted at the fluorine inlet end and flowed to the end flanges. The reaction products were very brittle and coke like in appearance with the surfaces turning green upon exposure to air. The slug was still intact and essentially unattacked at the exit end.

Since the slug or reaction products had melted down around the thermowells protruding into the bottom of the reactor, it was decided that the best way to remove the slug would be to fluorinate it out.

A second day the slug was fluorinated for about 70 minutes at a fluorine flow rate of 0.064 cfm. Steady core temperatures of 1360° F were recorded, with occasional excess fluorine registering on the exit rotameter.

It was decided to conduct a reaction of a high enough temperature to melt the whole slug to observe the effect on the nickel wall of contact with molten uranium.

Fluorine feed was started when the slug core temperature was 590° F. Excess fouorine flow rate was greater than 0.020 cfm while the feed rate was 0.060 cfm. As the slug core temperature began to rise, the amount of excess fluorine decreased. At a slug core temperature of 1200° F, there was an excess of 0.005 cfm.

The fluorine feed rate was increased in steps until a value of 0.107 cfm was reached. At this point with a trickle of cooling water, the wall temperatures were about 600° F and the slug core temperature was 1600° F. The cooling water flow was increased slightly and the wall temperatures dropped quickly to

280° F. In the meantime the fluorine feed was increased to 0.119 cfm, 0.147 cfm and finally 0.171 cfm, while the observed core temperatures rapidly increased to a value of 2000° F, and remained between 1900 and 2000° F for 30 minutes. Up to a temperature of 1700° F, about 0.007 cfm of fluorine passed through unreacted. Above 1700° F, no excess fluorine was observed.

Then very suddenly the amount of excess fluorine increased from some value less than 0.0018 cfm to some value greater than 0.016 cfm, the range of the exit rotameter, and the slug core temperature dropped rapidly. The melting of the slug had caused the uranium and uranium fluorides to flow to the bottom of the reactor, increasing the heat transfer coefficient by good contact with the reactor wall so the slug was cooled below the reaction temperature in spite of the heat released in the reaction. The reaction was thus snuffed out by the sudden increase in cooling.

When the reactor was opened, it was nearly half full from end to end of the characteristic coke-like melt. K-25 observers believed that the black melt was intermediate fluorinated compounds between UF_4 and UF_6.

The reactor was closed again and fluorination continued. The reaction did not start until a temperature of 1100° F was reached. The core thermo-well was at the surface of the fused material in the center of the reactor. The fluorine feed rate was kept at 0.170 cfm for 20 minutes and excess fluorine was again observed until the temperature reached about 1700° F.

The cooling water was left off, and the core temperature increased from 1200° F to 2000° F in 3 minutes, while the wall temperature was increasing from 1600° F to 1800° F.

Immediately after the wall temperature of 1800° F had printed on the chart, the bottom of the reactor was glowing red at the middle and some molten metal dropped through the insulation. It was thought that molten uranium had burned through the reactor wall, so the F_2 was shut off immediately and the cooling water turned on.

After a short while it seemed safe to re-enter the building to examine the reactor. When the insulation was removed, it was found that part of the copper coil had melted and there was no evidence of uranium having penetrated the reactor wall.

The melt inside the reactor was the same as described above, and was chipped from the reactor. In the center of the melt was found a lump of metal weighing 1.12 pounds which did not appear to have been melted. The

weight of the contents of the reactor was 5.12 pounds including the lump of metal. The amount of UF_6 collected in the cold trap was 6.30 pounds.

Inspection of the inside of the reactor revealed the wall had been attacked at the interface between the surface of the molten material and the wall, for there were grooves in the nickel wall about 3 or 4 inches long, 1/8 in. wide and approximately 1/32 in. to 1/16 in. deep. It is suspected this attack occurred because of the high temperature of the nickel in the last experiment.

A preliminary chemical analysis of one piece of the heterogeneous melt revealed the following:

$$\% \text{ total U} = 74.9$$
$$\% \text{ F} = 22.5$$
$$\% \text{ U}^{+4} = 67.3$$

This corresponds to nearly pure UF_4 with some unaccounted for U and F. Further results both chemical and X-ray fraction patterns will reveal more accurately the approximate composition of the melt.

The next experiments to be conducted will attempt slower fluorinations at lower temperatures with better temperature control. Since the reaction appears to be so localized, it may be necessary to use a diluent gas.

HOT PROCESS FUME LINES

Hot Hood Sampling—Bldg. 706C. During this quarter, sampling of the process hood discharges from Building 706C was completed and the results summarized. The order of activity in the discharge air is 10^{-5} millicuries per cu ft (as 1 Mev γ disentegrations). Simultaneous sampling of building air revealed that nearly all the hood discharge activity was already present in the room air entering the hood.

Hot Pilot Plant. Sampling of a 16-day Hot Pilot Plant run at 100% Hanford level is summarized in Table 5. All the fume activity, originating in 120-day slugs, is long-lived. The data on the dissolver off-gas line were obtained by Bartholemew, et al (MIT Practice School) during a double dissolving.

TABLE 5

	TOTAL OUTPUT MILLICURIES*	HOURLY OUTPUT MILLICURIES*
Dissolver Line	2	0.067
Cell Vent Line	15	0.040
Vessel Off-Gas Line	60	0.161
TOTAL	77	0.206

* Expressed as 1 Mev gamma, 1 photon per disintegration.

The activity output was only 7.2% of that encountered at a 30% Hanford level. The reduced level is due to the 40-day aging of slugs at 30% Hanford level as compared to the 120-day aging of slugs at 100% level.

Iodine Precipitation from Dissolver Line. Equipment to remove the hot iodines from fume lines was installed in parallel with the RaLa Operations dissolver off-gas line. The sample point was at the base of the 205 stack well beyond the caustic scrubber and the FG-50 filters. The equipment was makeshift and quite inefficient with the expectations of deriving rough qualitative results from the work. The basic principle involves the spraying of a weak silver nitrate solution into the line and subsequently collecting the solution in stainless steel cyclones. The collected solution is returned to the spray system through a filter which carries a cake of cold silver iodide (thus maintaining the solution saturated in silver iodide).

The rough results indicate a precipitation of about 60 millicuries of hot iodine. Since the sampling cut was one sixth, this states that at least 360 millicuries of hot iodine reached the 205 stack during the first dissolving (the equipment was shut down at that time).

The results warrant more careful work and fabrication of better equipment. This will be done in the near future.

Building 205 Lab Hoods. The various hoods from the 205 Hot Lab have been sampled. The maximum discharge was found to be ca. 10^{-9} millicuries per cu ft (7.5×10^{-5} millicuries per hour, total discharge).

REACTOR COOLING AIR

Life Test—Filter House Duplicate. The pressure drop across the first FG-50 layer was 5.4 inches of water as of June 15, 1949, representing a rise of 0.2 in. in 30 days. The equipment was started up October 22, 1948, making a total of 236 days operation as of June 15. Shortly thereafter an accident forced the cessation of the test on June 22, 1949.

The packing of the test filter was 2 layers of FG-50 backed by CWS paper. Unfortunately the sample point was such that no water solids (from the cooling water spray) reached the test filter.

To estimate filter house life, the data must be adjusted by the fact that velocity through the test filter was ca. twice (20 ft per min through FG-50) that in the filter house paper.

Attached is Fig. 23 detailing the actual plugging curve.

Special CWS Filter Pockets. A CWS filter pocket was removed from the Reactor Filter House after 145 days of normal exposure. Two test pockets were removed after seven days of normal exposure (exposures were during successive weeks). Table 6 details the data.

TABLE 6

REMOVAL DATE	TIME EXPOSED	TOTAL CWS ACTIVITY (BETA) - MILLICURIES				
		After 24 hrs	After 7 days	After 14 days	After 21 days	half-life
4-25-49	145 days	250	195	165	145	30 days
5-2-49	7 days	50	18	11	7.5	28 days
5-9-49	7 days	48	16	9	6.5	28 days

Uranium analysis on the 145-day pocket revealed less than one microgram of uranium per sq inch of CWS paper. Filter house CWS paper thus can contain an upper limit of 4 g of uranium, and probably has less than one gram.

Examination of FG-50 Pockets. FG-50 pockets removed after normal exposure in the reactor filter house (maximum exposure time—156 days) and analysed for uranium indicate the uranium content of the FG-material in the filter house to have been ca. 25 grams (0.16 grams per day) after 156 days. This corrects a previously published value of 900 grams total house content.

RESTRICTED

Dwg. #7909

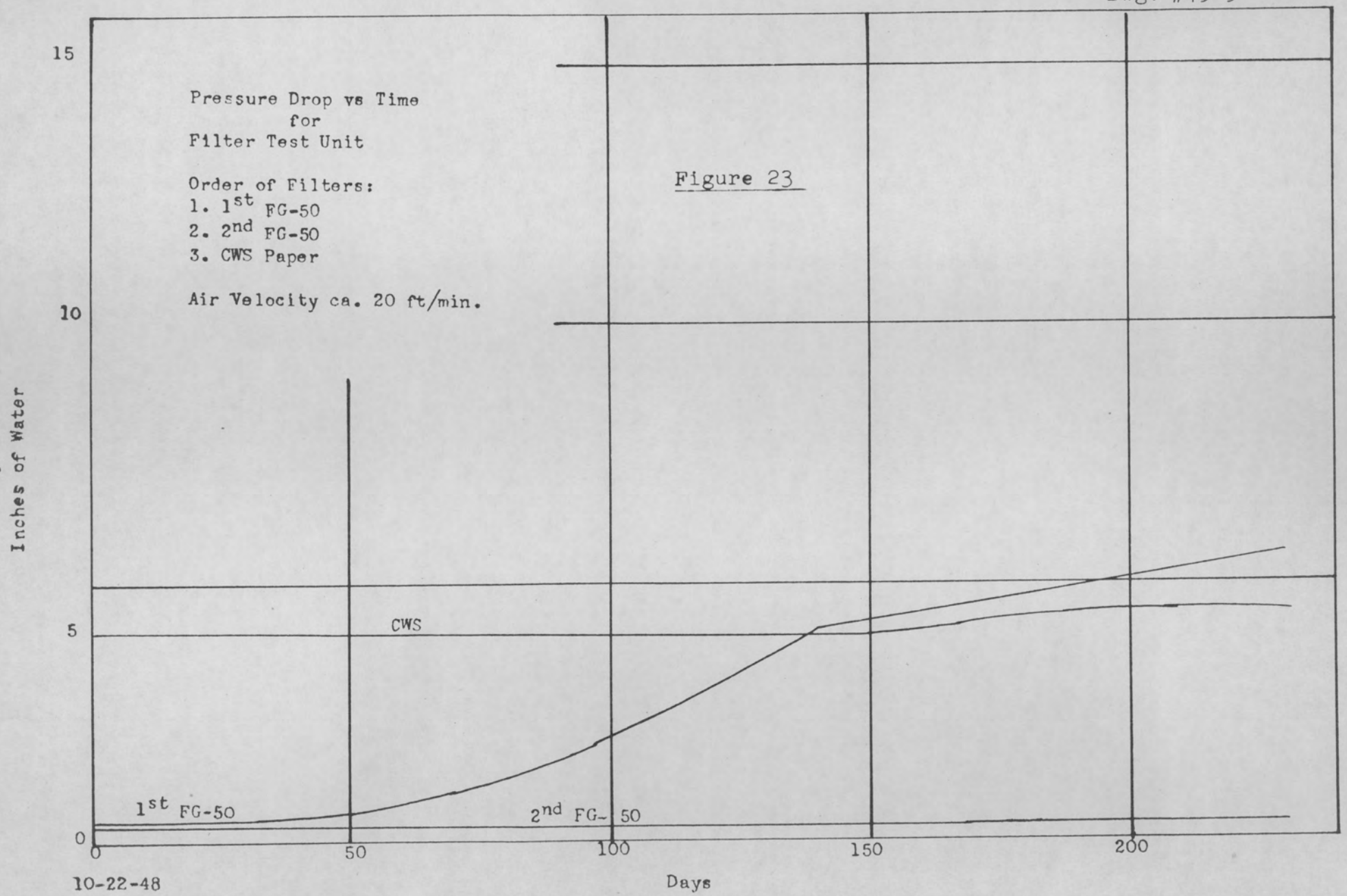

10-22-48

The pocket removed after 156 days contained about 65 grams of dust.

FG-Pocket Test. In order to evaluate the relative efficiencies of FG-25 and FG-50 filter material, twenty-two test pockets of FG-material were installed in the filter house on April 26, 1949. Seventeen of these have been removed and tested for pressure drop increase and dust pick-up.

Three combinations of FG material are being tested. They are (1) two layers of ½ inch FG-50, (2) two layers of ½ inch FG-25, and (3) one layer of FG-25 backed by one layer of FG-50.

The procedure being followed is to remove three pockets, one of each combination, at periodic intervals of time, measure the pressure drops across each, remove and weigh the filter material. The exposure conditions for all three pockets were as identical as possible in each case. The time of exposure for the last set to be removed will be about five months.

The experimental results should indicate the optimum combination of filter material and make possible a prediction of the service life of these filters when used in the Reactor Filter House.

Reactor Discharge Air Monitor. A monitor ("Junior") consisting of a filter which continuously filters a 20 cfm stream and a filter scanner (a thin-walled ionization chamber connected to a Beckman micro-micro-ammeter which in turn is connected to a 0 to 1 mil L and N Micromax recorder) was connected in parallel with the reactor discharge air duct. The instrument responded readily to injections of irradiated dust containing minute quantities of uranium; however, in service the interference of gaseous background was so great as to prevent adequately precise interpretations of the charts. The instrument clearly shows power level changes of less than 100 KW.

The instrument was returned for further development work to the Reactor Operating Department where it was originally conceived in conjunction with the Instrument Department. It is planned to cyclonically separate the dust burden allowing only the dust burden and a greatly diluted portion (ca. 1/40) of the original gas associated with that burden to reach the instrument filter.

Reactor Filter House Efficiency Test. The filter house inlet and outlet air streams were sampled through a number of CWS No. 6 filter papers in series. The papers were counted and analysed radiochemically by the Chemistry Division for some of the major rare gas fission product chains.

The results are given in Table 7.

TABLE 7

FISSION CHAIN	ACTIVITY AT REACTOR EXIT (Curies/day)	ACTIVITY PAST CWS FILTERS (Curies/day)
Kryton 89	12.5	12
Krypton 91	200.	34
Xenon 140	45.	19.5
Xenon 141	150.	0.2

The papers collected before and after the filter house indicate an overall house efficiency of about 91% on gross beta contamination potential. The actual house efficiency on particulates is in the neighborhood of 99+%, but a considerable quantity of gas decays to particulate matter after the filter house. This is on the order of one millicurie per day of long-lived beta emitter, or 5 to 10 millicuries per day of short-lived particulate activity.

ENGINEERING DESIGN AND DEVELOPMENT

MODIFICATION OF BUILDING 9204-1, Y-12

Process and experimental equipment was removed from the 205 building at X-10 and re-erected at building 9204-1, at Y-12. Personnel were transferred and are now functioning in the new quarters. The few alterations remaining to be accomplished are minor and have no effect on normal operations. Figures 24-29 show the new set-up.

ISOTOPE LOADER

The chain conveyor type isotope loader described in the last quarterly report was fabricated and is presently undergoing several modifications.

A spring loaded expansion joint was installed to eliminate slack in the drive chain and to compensate for the uneven expansion of different materials on heating.

Since 16 in. of paraffin and 6 in. of lead have been found necessary to shield an open stringer hole, internal shielding elements (1 in. square blocks consisting of 1/3 in. lead and 2/3 in. paraffin in an aluminum can) will be mounted on the drive chain to fill up the open channel. Four feet of these blocks should reduce the external shielding required to 1 in. of boron plastic and 4 in. of lead. The large (22 in. thick) shield which would be required has made it impossible to plan to unload isotopes with the reactor operating until the shielding effect of the isotope cans themselves can be checked after the loader is installed. Therefore, the present loader design will be for use during regular shut downs only.

ELECTRICAL FLOWMETER

Two thermoelectric flowmeters for the automatic metering of flows ranging from 20 to 200 cc/min were completed during the past three months. One was shipped to Argonne National Laboratory and the other installed in the ORNL semi-works.

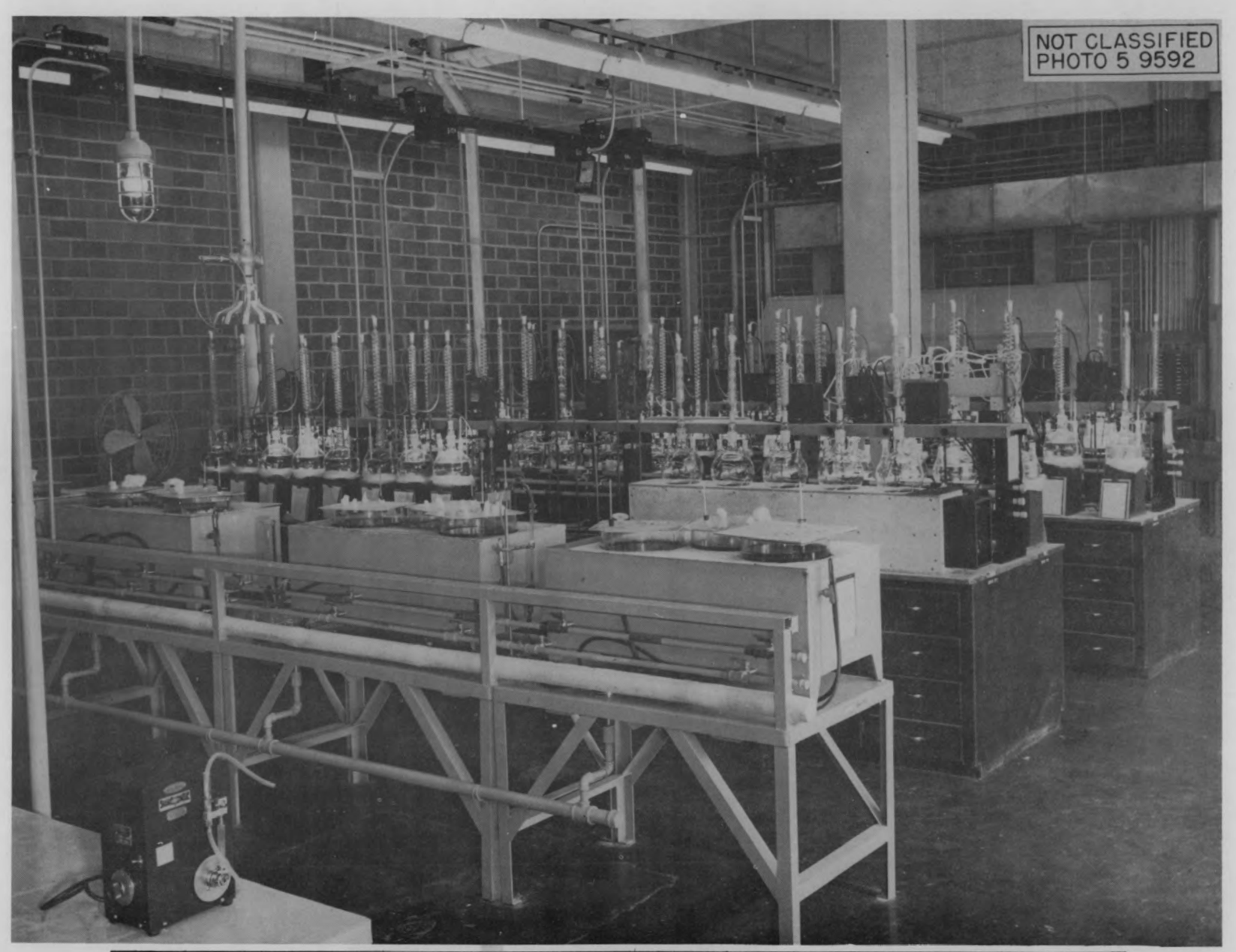

FIG. 24
A CORNER OF THE CORROSION LABORATORY, SHOWING BANKS OF ATMOSPHERIC PRESSURE CORROSION TEST UNITS

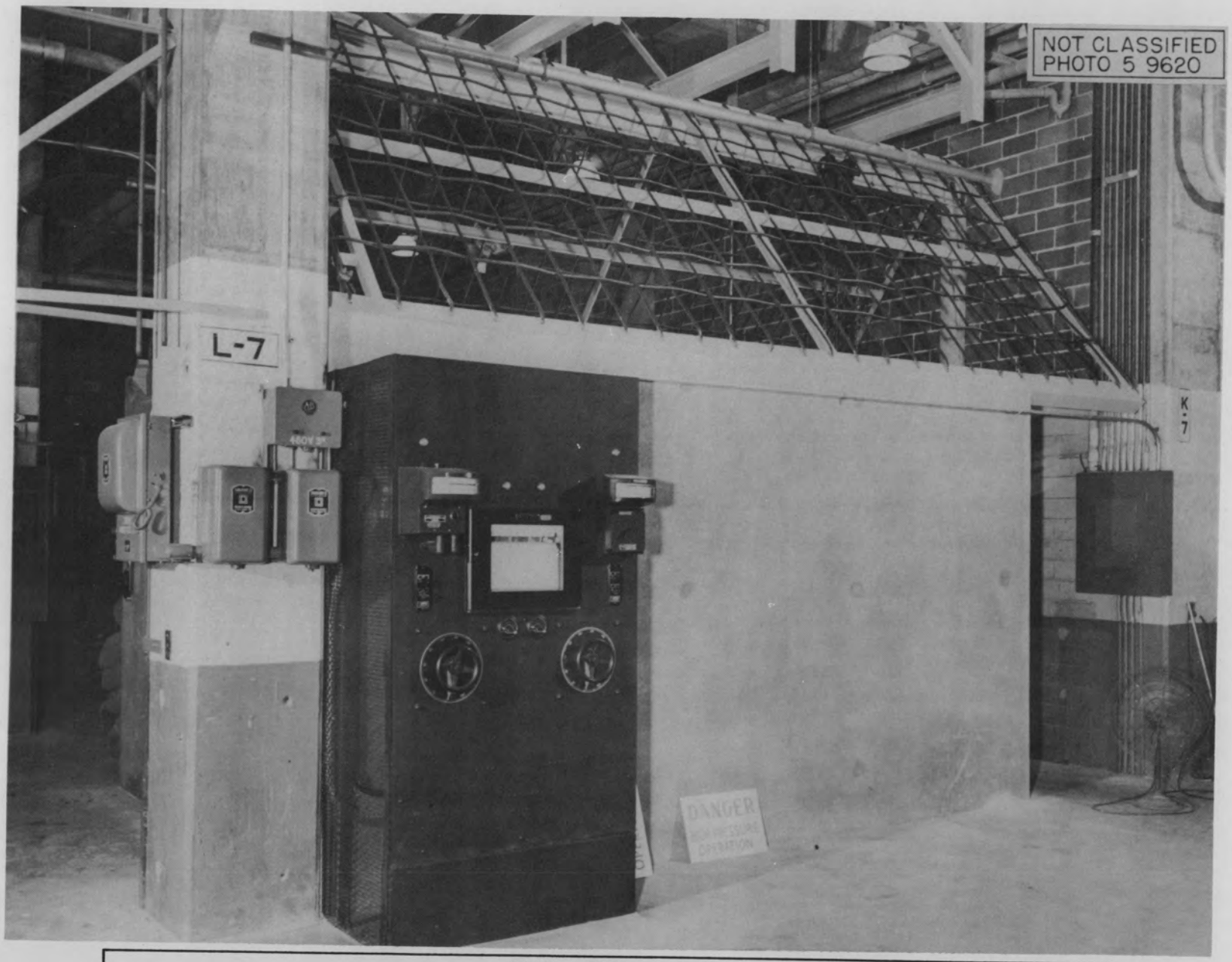

FIG. 25
THE CONTROLS AND THE PROTECTIVE ENCLOSURE FOR THE LARGE HIGH PRESSURE AUTOCLAVE FOR CORROSION STUDIES

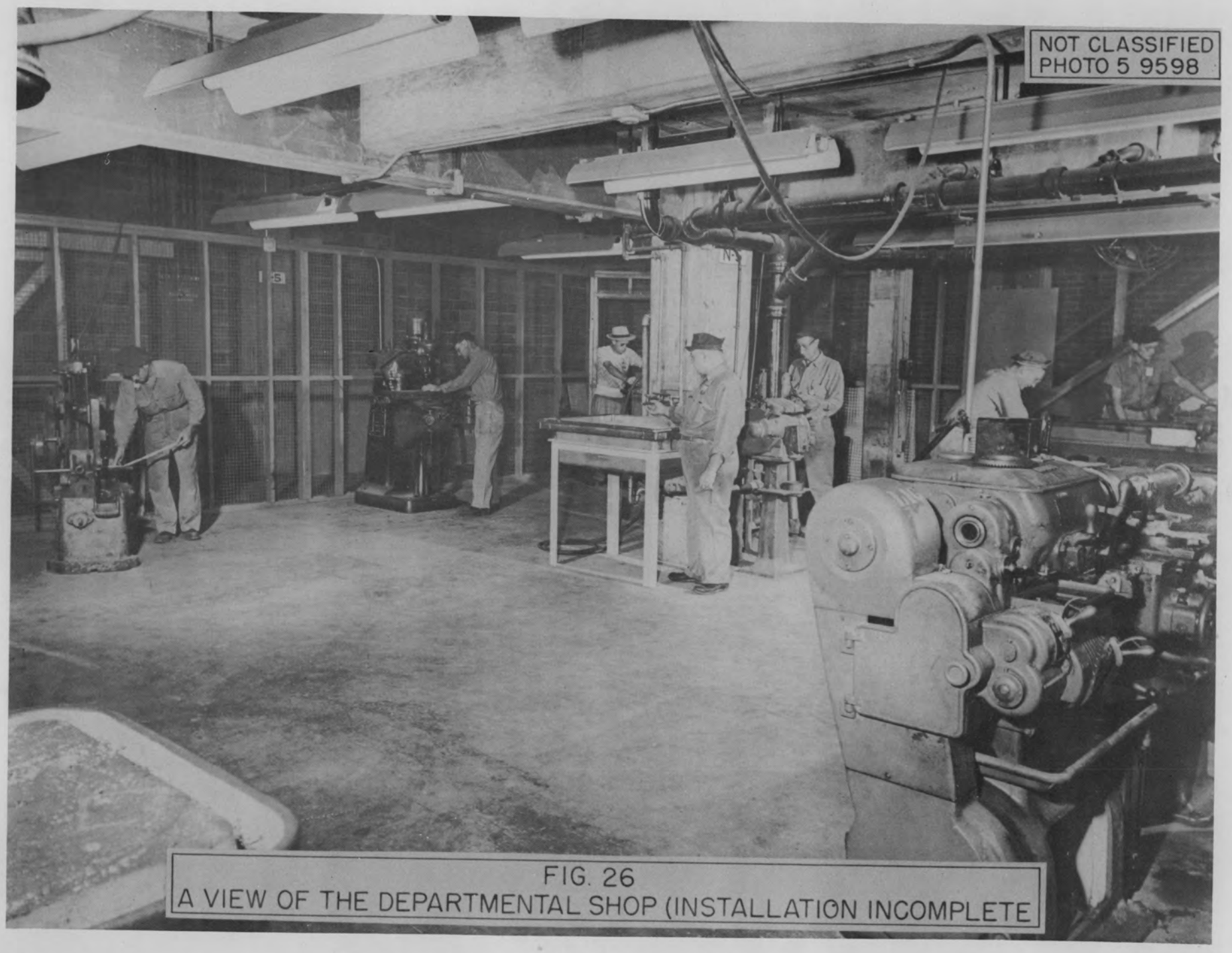

FIG. 26
A VIEW OF THE DEPARTMENTAL SHOP (INSTALLATION INCOMPLETE

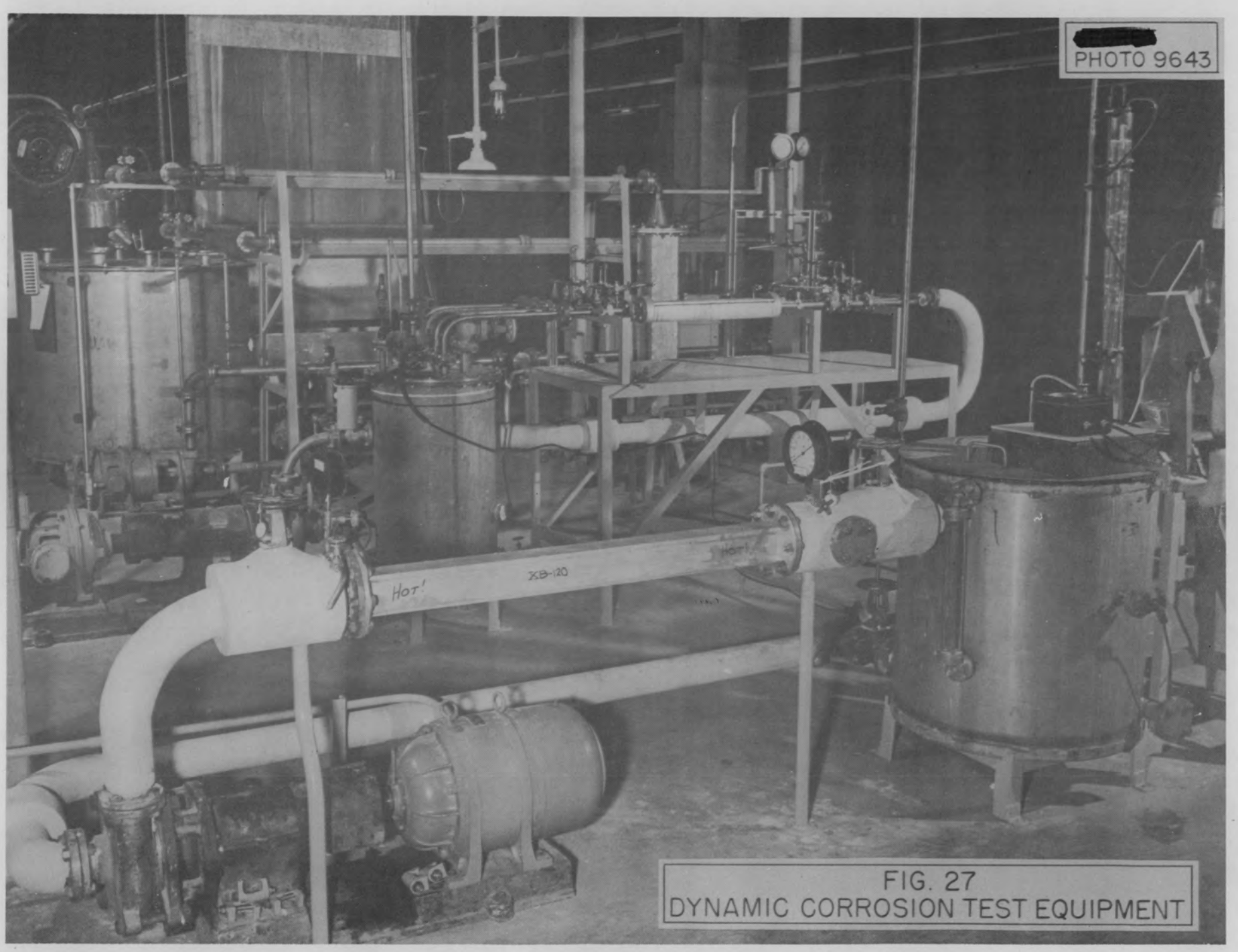

FIG. 27
DYNAMIC CORROSION TEST EQUIPMENT

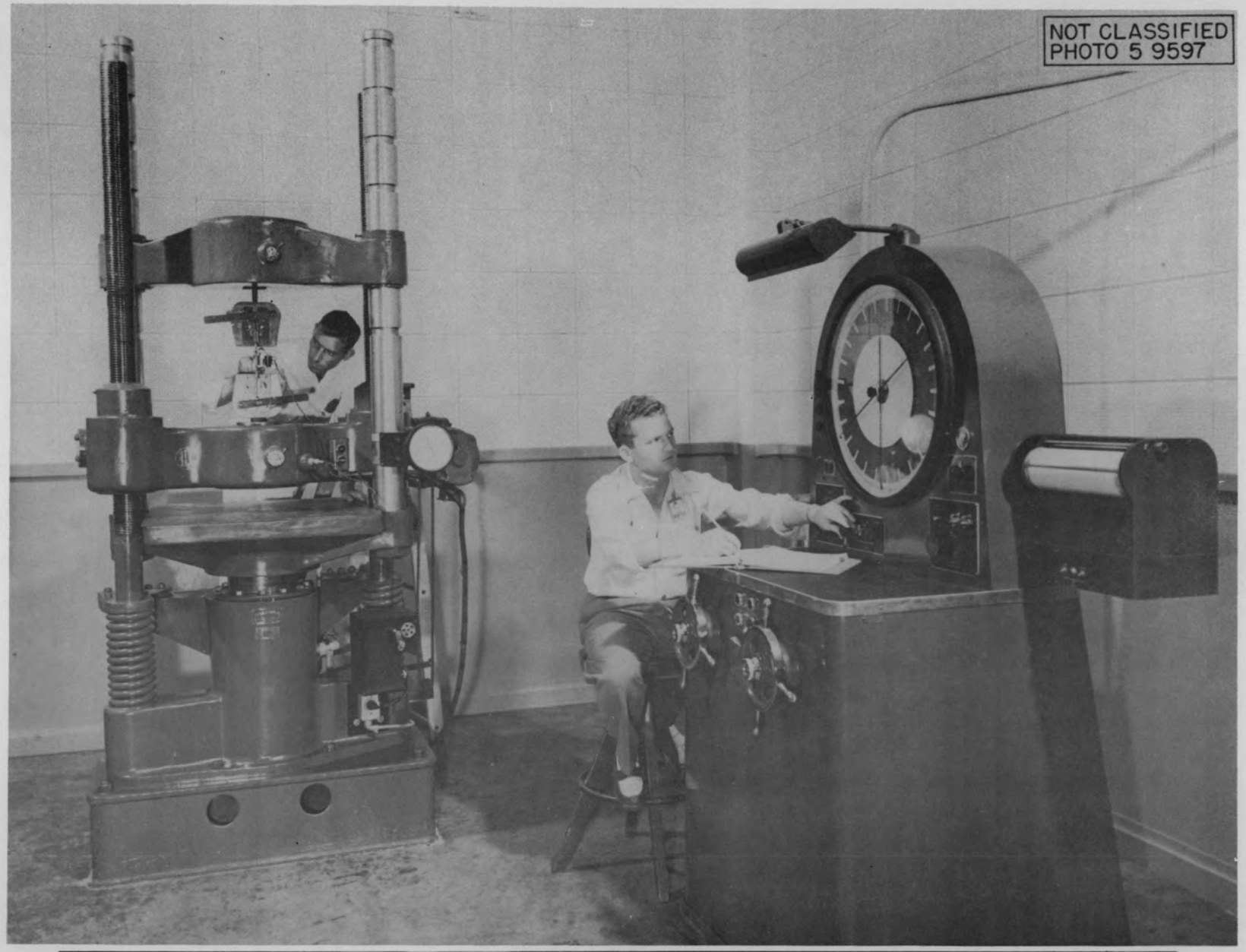

FIG. 28
OPERATION OF THE 120,000 POUND TENSION-COMPRESSION TESTING MACHINE IN THE AIR CONDITIONED MATERIALS LABORATORY

FIG. 29
A VIEW OF ONE OF THE TWO LARGE GENERAL EXPERIMENTAL AREAS

TABLE 8

The Stagnant Corrosion of Various Metals and Alloys in 0.0145 M Uranyl Sulfate at 100° C for 1008 hours

MATERIAL	INT. SOL. pH	SPECIMEN AREA (cm^2)	AS REMOVED WT. Gain (mg/dm^2)	CHANGE Loss (mg/dm^2)	MAX. PIT DEPTH (mils)	MAX. PIT DIA. (mils)	PITS PER cm^2	EQUIVALENT THICKNESS LOSS RATE (mils/month)
Palladium	3.35	18.29	--	1.64	0.4	4	0.4	0.004
Rhodium	3.42	18.25	1.09	--	0.3	2	0.9	---
Gold	3.35	18.91	0.53	--	1.6	20	3.2	---
Silver	3.35	19.29	--	41.50	0.8	10	0.5	0.111
Platinum	3.33	18.70	2.67	--	0.8	10	0.7	---
Titanium	3.36	26.64	--	39.73	neg.	neg.	neg.	0.245
Nickel	3.45	23.54	--	--	--	--	--	disintegrated
Ticonium III	3.45	53.69	--	1.68	1.4	10	0.9	0.006
Illium G	3.36	17.09	--	7.67	neg.	neg.	neg.	0.026
Carpenter 20	3.20	46.45	--	3.23	1.8	20	6.4	0.011
Tantalum	3.16	30.87	--	0.97	neg.	neg.	neg.	0.002
Ni-Resist	3.20	24.78	--	4410.0	flaky scale formation			16.51
Zirconium	3.28	17.19	0.58	--	neg.	neg.	neg.	---
Hastelloy A	3.36	15.00	--	4815.0	flaky scale formation			15.36
Hastelloy B	3.42	16.64	--	5660.0	flaky scale formation			17.23
Hastelloy C	3.18	25.41	--	60.20	neg.	neg.	neg.	0.190
Hastelloy D	3.50	12.71	1262.0	--	neg.	neg.	neg.	---

HOMOGENEOUS REACTOR CORROSION STUDIES

The complete results of 17 stagnant uranyl sulfate corrosion tests are included in Table 8. These tests were operated at 100° C for 1008 hours in uranyl sulfate solution containing approximately 3.5 gm of uranium/liter. The individual test volume was 4000 ml.

Various metals and alloys were exposed to the uranyl sulfate solution in order that groupings of materials showing good and poor corrosion resistance could be obtained. Future corrosion studies will be confined to those metals or alloys showing promise of good corrosion resistance. On the results of this cursory examination, the following materials, arranged in a decreasing order of corrosion resistance to 0.0145 *M* uranyl sulfate at 100° C, appear as possibilities for use in the construction of a homogeneous reactor; the suitability of these materials can be determined only after further intensive corrosion studies: (1) Zirconium, (2) Rhodium, (3) Platinum, (4) Gold, (5) Tantalum, (6) Palladium, (7) Ticonium III, (8) Carpenter 20, (9) Silver, and (10) Illium G.

The approximate chemical compositions of the materials used in the uranyl sulfate corrosion tests are shown in Table 9.

TABLE 9

Nominal Chemical Compositions of Alloys Used for Uranyl Sulfate Corrosion Tests

ALLOY DESIGNATION	ELEMENTS								
	Cr	Ni	Mo	Cu	Fa	Si	Co	C	W
Ticonium III	26	31	6				31		
Illium G	21	bal.	6	4	6				
Ni-Resist	2.5	16		7	bal.	1.8		2.80	
Carpenter 20	20	29	2	3		1		0.07	
Hastelloy A		bal.	22		22				
Hastelloy B		bal.	32		6				
Hastelloy C	17	bal.	19		6				5
Hastelloy D		bal.		3		10			

The results of 4 uranyl sulfate corrosion tests operated at 225° C are shown in Table 10. These tests were conducted by heating a sealed, heavy-walled, silica glass tube containing the test specimen immersed in 4 ml of 0.0145 *M* uranyl sulfate (3.5 gm U/*l*) in a tube-type furnace. The total time of the test was 138 hours.

TABLE 10

The Stagnant Corrosion of Various Metals in 0.0145 M Uranyl Sulfate at 225° C

MATERIAL	INT. SOL. pH	SPECIMEN AREA, cm^2	AS REMOVED WT. CHANGE GAIN (mg/dm^2)	AS REMOVED WT. CHANGE LOSS (mg/dm^2)	FINAL SAMPLE CONDITION
Gold	3.2	3.71	13.48	---	No pitting observed
Silver	3.2	4.80	---	14.58	Fine white film
Platinum	3.2	5.21	21.10	---	No pitting observed
Palladium	3.2	4.90	10.20	---	No pitting observed

These results correlated closely with the test results obtained with uranyl sulfate at 100° C. Radioactivity counts were made on the test specimens, and on those samples showing weight gains, the intensity of the count expressed in mg of uranium, agreed closely with the recorded weight gains. These results indicated a deposition of uranium oxide or/and uranyl sulfate on the metal surfaces. The silver test specimen, showing a weight loss, did not exhibit any signs of radioactivity.

Table 11 presents a listing of the metals and alloys exposed to 0.0145 *M* uranyl sulfate at 100° C for 1008 hours. Four categories are tabulated and the materials under each category are listed in a decreasing order of corrosion resistance.

TABLE 11

Corrosion Behavior of Various Metals and Alloys in 0.0145 M Uranyl Sulfate at 100° C for 1008 Hours

CLASSIFICATION

Very Good	Good	Fair	Poor
Zirconium	Ticonium III	Hastelloy C	Titanium
Rhodium	Carpenter 20		414 Stainless Steel
Platinum	Silver		Nickel
Gold	Illium G		Hastelloy A
Tantalum			Hastelloy B
Palladium			Hastelloy D
			Beryllium

Very Good - Equivalent thickness loss, 0.002-0.004 mil/month
Good - Equivalent thickness loss, 0.006-0.026 mil/month
Fair - Equivalent thickness loss, 0.190 mil/month
Poor - Equivalent thickness loss, 0.25 mil/month and greater

Preliminary results to date on various stainless steels indicate that the following alloys fall into a good to very good category: types 302, 304, 309, 316, 317, 430, and 431.

Corrosion tests in uranyl sulfate solutions containing 3.5 gm U/*l* and 35 gm U/*l* are in progress with other metals and alloys. High temperature (250° C) corrosion tests in 35 gm U/*l* uranyl sulfate are also in progress. A one liter capacity autoclave for tests at 250° C was ordered. The construction of small bombs to be heated in tube furnaces to expand facilities for high temperature tests is planned.

SHIELDING

CONCRETES

A survey of the entire field of monolithic shielding was completed this quarter and a comprehensive report, ORNL 243, is being prepared. The materials studied consist of various combinations of aggregates (ranging from iron ore at a quarter of a cent per pound to ferro-tungsten at $2.00 per pound) and cements (from silica gel at 0.13 cents per pound to litharge-glycerin at 0.21 cents per pound). The survey was extended to include block or brick type shields, comparing costs and utility of paraffin, lead, cast iron, concretes—both ordinary and special, and square cans filled with iron turnings and silica gel. Special fabrication techniques and their effect on costs and shield quality are also considered. Several tables and graphs are included for easier comparison. It is hoped that this report may facilitate decisions regarding various shielding problems which occur on and off the project.

The long-promised summary report on MO has been deferred until the above survey could be completed. It was felt that this was justified because the true value of the MO shield could be more easily evaluated after it has been fitted into a summary report of a more general nature. For example, MO has been often recommended for gamma shielding where no neutrons will be encountered. The summary report will indicate that a great many other materials will do as satisfactory a job at considerably lower cost; the primary characteristic of MO, its high water content, is of little use in gamma shielding.

Working arrangements with the Austin Company and with the MTR, KAPL and NEPA groups have been maintained and strengthened, and it is anticipated that some efforts will be devoted through the coming months to running tests in conjunction with these groups. However, the emphasis on concretes which has characterized the ORNL work in the past is expected to decrease sharply after the issuance of these reports. Several tests on cements and concretes now in progress will be continued and reported.

BORAL

Essentially all of the small-scale work on boral was completed, and a report, ORNL 242 issued. Arrangements have been made by ORNL and NEPA with the

Lukens Steel Company in Coatesville, Pennsylvania, to roll two sheets approximately 250 square feet each and ¼ in. thick, from which ten five-feet by six-feet sheets for experimental shielding work and four shutters approximately four feet square, will be cut. One of the ingots has been cast by the ORNL shielding group at Y-12, and the other one should be completed within a week or two.

Studies are being directed toward finding a cheaper source of high boron material from which sheets similar to boral might be made for use in large, inexpensive shields. Lead-B_4C ingots have been made by a special hot-pressing technique and presumably large sheets can be made if desired. Some experimental pressed shapes have been made and further work along this line will be done when a particular application appears. Three boral tensile specimens have been placed in the ORNL reactor for radiation damage tests.

ATTENUATION TANK

Two reports have been completed, one on attenuation of gamma radiation through 14 feet of water, and one describing the attenuation facility in some detail. Exploratory experiments with lead, iron, water and calibration tests on the tank will be the principal use made of the tank during the next few months.

An experiment was run to determine a reasonably priced minimum shield for a 4 in. square straight hole through the ORNL shield and pile. Measurements of fast and thermal neutrons and gamma radiation were taken with a great many different types of detectors with the help of R. L. Clark of Health Physics. The minimum shield was found to consist of four 4 in. layers of "boroffin" (a B_2O_3-paraffin mixture) separated by three 2 in. layers of lead. Neutron scattering in the paraffin caused the hole to act as an isotropic point source, requiring a hemispherical shield of 22 in. radius. The report on this work, along with the other two attenuation reports mentioned above, is undergoing final revision and will be issued during the next quarter.

TESTING LABORATORY

A considerable amount of testing equipment was added to the materials laboratory and is being calibrated and put into use. The new 60 ton Baldwin-

Southwark tensile-compression machine in Building 9204-1 is being used for shielding specimens. New thermal conductivity equipment, capable of greater precision, has just been completed by the shop and is now being assembled. Special apparatus, such as the constant-humidity, variable-temperature system for testing stability of water in cements, is also undergoing calibration runs. The equipment for irradiating metal hydrides at high temperatures in the ORNL reactor is being completed by NEPA with the help of the K-25 Instrument Shop.

PERSONNEL

M. D. Peterson - *Director*

W. M. Hawkins, *Assistant Director - Administration*
Technical Division Library

F. A. Kocur, *Assistant to Director - Special Problems*

C. F. West, Jr. - *Maintenance Service*

Louise Bond*, *Secretary*
Jeanne Doran, *Secretary*
Evelyn W. Dicks, *Clerk*

J. A. Lane, *Associate Director - Design and Reactor Coordination*

Eunice Greenway*, *Secretary*

R. B. Briggs - *Special Assignment*

A. D. Mackintosh - *Architect*

W. R. Gall, *Chief, Section III - Design*

Eunice Greenway*, *Secretary*

R. M. Jones*, *Associate Section Chief*

Mildred Waller, *Typist*

F. L. Culler, *Group Leader - Chemical Process Design*

Lucille Kuykendall, *Clerk*

F. N. Browder
H. E. Goeller
R. J. Klotzbach
F. C. McCullough
R. P. Milford
W. G. Stockdale
W. E. Unger

R. M. Jones*, *Group Leader - Mechanical Design*

R. E. Engberg
J. P. Gill
D. J. Mallon
J. R. McWherter
W. L. Scott
C. L. Segaser
W. E. Sholl, Jr.
T. H. Thomas
F. C. Zapp

DRAFTSMEN

(Chief) H. L. Watts
C. W. Day
A. S. Ludlow
J. E. Roberts

F. R. Housley, *On loan to Safety Department*

Ruby Brooks - *Clerk, on loan (½ time) from Central Files*

G. Thornton, *on loan from NEPA*

**Dual Capacity*

C. E. Winters, *Associate Director - Engineering Research & Development* — Louise Bond*, *Secretary*

C. B. Graham, *Chief, Section II - Engineering Development* — Thelma Sutton*, *Secretary*; Gladys Darnell, *Secretary*

S. E. Beall, *Group Leader - Mock-up Operations*

T. H. Mauney - *Magnets*
J. W. Hill - *Mock-up Controls*

A. L. Davis, *Tech.*
J. J. Hairston, *Tech.*
W. B. Krick, *Tech.*

J. Reed - *Special Problems*

W. K. Stromquist, *Group Leader - Hydraulic Tests* — G. H. Johnstone, *Tech.*

R. VanWinkle, *Group Leader - Water Treatment, Fluoride Process*

C. P. Coughlen, *Group Leader - Dust Collection Measurements* — C. M. Burchell, *Tech.*; R. Smith, *Tech.*

H. C. Savage
I. Spiewak
R. H. Wilson

Dunlap Scott - *Mock-up Operations, on loan from NEPA.*

R. N. Lyon*, *Acting Chief, Section IV - Engineering Materials* — Wanda Jones, *Secretary*

J. L. English, *Group Leader - Corrosion* — R. N. Tench, *Tech.*

A. R. Olsen
S. H. Wheeler

T. Rockwell, *Group Leader - Shielding*

C. E. Clifford
J. D. Flynn
R. B. Gallaher
V. L. McKinney

V. L. DiRito, *Tech.*
W. G. Hullings, *Tech.*
D. J. Kirby, *Tech.*

H. P. Sleeper - *Shielding Program, on loan from Knolls' Laboratory.*

R. N. Lyon*, *Chief, Section V - Engineering Research* — Thelma Sutton*, *Secretary*

R. N. Lyon - *Heat Transfer* — M. Richardson, *Tech.*

O. Sisman, *Group Leader - Radiation H Stability of Materials*

C. D. Bopp

W. K. Kirkland, *Tech.*
R. L. Towns, *Tech.*

A. S. Kitzes - *Radiation - Solvent Extraction*

W. S. Farmer - *Solvent Extraction*

R. V. Bailey - *Heat Transfer, University of Mississippi. Summer Visitor*
W. B. Harrison - *Heat Transfer, Consultant.*
E. M. Sparrow - *Heat Transfer, Summer Employee.*

* *Dual Capacity*