UNCLASSIFIED

MARTIN MARIETTA ENERGY SYSTEMS LIBRARIES
3 4456 0049258 0

ORNL 714
Progress Report
4A

CENTRAL RESEARCH LIBRARY
DOCUMENT COLLECTION

INSTRUMENT RESEARCH AND DEVELOPMENT QUARTERLY PROGRESS REPORT FOR PERIOD ENDING APRIL 15,1950

CENTRAL RESEARCH LIBRARY
DOCUMENT COLLECTION

LIBRARY LOAN COPY

DO NOT TRANSFER TO ANOTHER PERSON

If you wish someone else to see this document, send in name with document and the library will arrange a loan.

OAK RIDGE NATIONAL LABORATORY
OPERATED BY
CARBIDE AND CARBON CHEMICALS DIVISION
UNION CARBIDE AND CARBON CORPORATION
UCC
POST OFFICE BOX P
OAK RIDGE, TENNESSEE

UNCLASSIFIED

UNCLASSIFIED

ORNL 714
This document consists of 34 pages.
Copy 4 of 180, Series A

Contract No. W-7405, eng. 26

INSTRUMENT RESEARCH AND DEVELOPMENT

QUARTERLY PROGRESS REPORT

For Period Ending April 15, 1950

Compiled by

W. E. Thompson

JUN 19 1950

OAK RIDGE NATIONAL LABORATORY
operated by
CARBIDE AND CARBON CHEMICALS DIVISION
Union Carbide and Carbon Corporation
Post Office Box P
Oak Ridge, Tennessee

MARTIN MARIETTA ENERGY SYSTEMS LIBRARIES
3 4456 0049258 0

UNCLASSIFIED

ORNL 714
Progress Report

INTERNAL DISTRIBUTION

1. G. T. Felbeck (C&CCC)
2-3. 706-A Library
4. 706-B Library
5. Biology Library
6. Health Physics Library
7-8. Training School Library
9. Metallurgy Library
10-13. Central Files
14. C. E. Center
15. C. E. Larson
16. A. M. Weinberg
17. E. J. Murphy
18. F. C. VonderLage
19. S. C. Barnett
20. D. W. Cardwell
21. J. A. Swartout
22. A. H. Snell
23. A. Hollaender
24. J. S. Felton
25. K. Z. Morgan
26. L. B. Emlet
27. C. S. Harrill
28. F. L. Steahly
29. J. H. Gillette
30. P. R. Bell
31. C. J. Borkowski
32. G. H. Clewett
33. A. H. Holland
34. W. M. Hurst
35. W. H. Jordan
36. C. P. Keim
37. M. T. Kelley
38. W. J. Ladniak
39. Ralph Livingston
40. R. S. Livingston
41. M. M. Mann
42. J. W. Morfitt
43. L. M. Reynolds
44. C. W. Sheppard
45. E. D. Shipley
46. W. G. Stone
47. F. Western

EXTERNAL DISTRIBUTION

48-55. Argonne National Laboratory
56. Armed Forces Special Weapons Project
57-58. Atomic Energy Commission - Washington
59. Battelle Memorial Institute
60. Brush Beryllium Company
61-68. Brookhaven National Laboratory
69. Bureau of Medicine and Surgery
70. Bureau of Ships
71-74. Carbide and Carbon Chemicals Division (K-25)
75-78. Carbide and Carbon Chemicals Division (Y-12)
79. Chicago Operations Office
80. Cleveland Area Office, AEC
81. Columbia University (J. R. Dunning)
82. Columbia University (G. Failla)
83. Dow Chemical Company
84. H. K. Ferguson Company
85-87. General Electric, Richland
88. Harshaw Chemical Corporation
89. Idaho Operations Office
90-91. Iowa State College
92. Kansas City Operations Branch
93-94. Kellex Corporation
95-98. Knolls Atomic Power Laboratory
99-101. Los Alamos Scientific Laboratory
102. Mallinckrodt Chemical Works
103. Massachusetts Institute of Technology (A. Gaudin)
104. Massachusetts Institute of Technology (A. Kaufmann)
105-107. Mound Laboratory
108-109. National Advisory Committee for Aeronautics

Distribution (Cont'd)

110-111. National Bureau of Standards
112-113. Naval Radiological Defense Laboratory
114. New Brunswick Laboratory
115-119. New York Operations Office
120. North American Aviation, Inc.
121. Patent Branch (Washington)
122. RAND Corporation
123. Sandia Laboratory
124. Santa Fe Operations Office
125. Sylvania Electric Products, Inc.
126-140. Technical Information Division (Oak Ridge)
141. USAF, Air Surgeon (Lt. Col. R. H. Blount)
142. USAF, Director of Armament (Captain C. I. Browne)
143-144. USAF, Director of Research and Development (Col. R. J. Mason, Fred W. Bruner)
145. USAF, Eglin Air Force Base (Major A. C. Field)
146. USAF, Kirtland Air Force Base (Col. Marcus F. Cooper)
147. USAF, Maxwell Air Force Base (Col. F. N. Moyers)
148-149. USAF, NEPA Office
150-151. USAF, Office of Atomic Energy (Col. H. C. Donnelly, A. A. Fickel)
152. USAF, Offutt Air Force Base (Co. H. R. Sullivan, Jr.)
153. USAF, Wright-Patterson Air Force Base (Rodney Nudenberg)
154. U. S. Army, Atomic Energy Branch (Lt. Col. A. W. Betts)
155. U. S. Army, Army Field Forces (Captain James Kerr)
156. U. S. Army, Commanding General, Chemical Corps Technical Command (Col. John A. MacLaughlin thru Mrs. Georgia S. Benjamin)
157. U. S. Army, Chief of Ordnance (Lt. Col. A. R. Del Campo)
158. U. S. Army, Commanding Officer, Watertown Arsenal (Col. Carrol H. Deitrick)
159. U. S. Army, Director of Operations Research (Dr. Ellis Johnson)
160. U. S. Army, Office of Engineers (Allen O'Leary)
161. U. S. Army, Office of the Chief Signal Officer (Curtis T. Clayton thru Maj. George C. Hunt)
162. U. S. Army, Office of the Surgeon General (Col. W. S. Stone)
163. U. S. Geological Survey (T. B. Nolan)
164. USAF, Director of Plans and Operations (Col. R. L. Applegate)
165. U. S. Public Health Service
166. University of California at Los Angeles
167-171. University of California Radiation Laboratory
172-173. University of Rochester
174. University of Washington
175-176. Western Reserve University
177-180. Westinghouse Electric Company

PREFACE

This Instrument Research and Development Report covers the activities of instrument groups in the Chemistry, Health Physics, and Physics Divisions and the Instrument Department of the Engineering and Maintenance Division. Although the instrument groups report their work in division quarterly reports and will continue to do so, it is believed that some advantage will be gained by compiling the sections of these reports which cover instrument research and development with the quarterly report of the Instrument Department into a single unclassified document.

TABLE OF CONTENTS

CHEMISTRY DIVISION 5

A Method for Regulating Adjustable High Voltage Power Supplies 5

HEALTH PHYSICS DIVISION 8

Portable Fast Neutron Dosimeter 8

Portable Alpha Survey Meter 8

INSTRUMENT DEPARTMENT 10

Cockroft-Walton Generator 10

Magnet Analyzer 10

Hydrogen Pumping with Oil Diffusion Pumps 11

Diffusion Pump Protector 11

Ion Gage Control 11

Thorium and Uranium Hydrides 11

Resonance Analyzer 12

Current Integrator 12

Logarithmic Electrometer 12

Radiation Detection Engineering 13

Side Window Mica Window Counter Tubes 13

Liquid Level Telemeter 13

Thermistor Temperature Recorder for Meteorological Survey 14

Microformer Extensiometer for Creep Measurements 14

Universal Strain Gage Bridge Control Unit 14

a-c Recording Hygrometer 14

Crystal Growing Instrumentation and Control 15

Agar Counting 15

Modification of Atomic Instrument Company Scalers 15

Instrument Construction and Maintenance 15

PHYSICS DIVISION 18

Electron Energy Studies with the Anthracene Scintillation Spectrometer 18

Single Channel Differential Pulse Height Selector 25

A Multi-Channel Pulse Sorter 29

CHEMISTRY DIVISION

A Method for Regulating Adjustable High Voltage Power Supplies (E. Fairstein). A circuit developed for regulating high voltage, high current power supplies has the following advantages over the conventional system:

1. It permits the series tube to be placed in the high tension lead for negative as well as positive output supplies.

2. The output can be varied from voltages as low as the reference to the maximum for which the supply was designed, by the control of a single parameter.

The system is conventional in that there is an amplifier operating upon the error signal. The output of this amplifier varies the bias on the series tube in such a way that the error signal is minimized. The system is new in that the amplified error signal is transferred to the series tube by means of a pulse-width modulated carrier, rather than by direct coupling.

The carrier oscillator is a multivibrator (T_5 and T_6 in Fig. 1) operating at a frequency of about 250 kilocycles. The grid resistors, instead of being returned to a fixed voltage, are connected to the output of the error signal amplifier (T_1 through T_4). This results in a change in the ratio of positive to negative pulse width proportional to the magnitude of the amplified error signal.

One plate of the multivibrator is capacitively coupled to a demodulator (T_7), which is in turn directly coupled to the series tube (T_8). The demodulator circuit is similar to that of a plate detector. Its input signal, however, is great enough to saturate it in both directions. This results in the magnitude of the d-c output component being sensitive to the ratio of positive to negative pulse width (but not to the amplitude) of the input signal.

Signal shapes at the demodulator grid for various power supply output voltages have been indicated on the diagram.

S_1 and S_2 are conventional supplies. S_3 is a low voltage supply whose insulation to ground must be at least as good as the output voltage of S_2.

A supply using this type of regulator has been built for use with Dr. R. Livingston's microwave spectrometer. The output is capable of variation

NOT CLASSIFIED
DWG. 8640

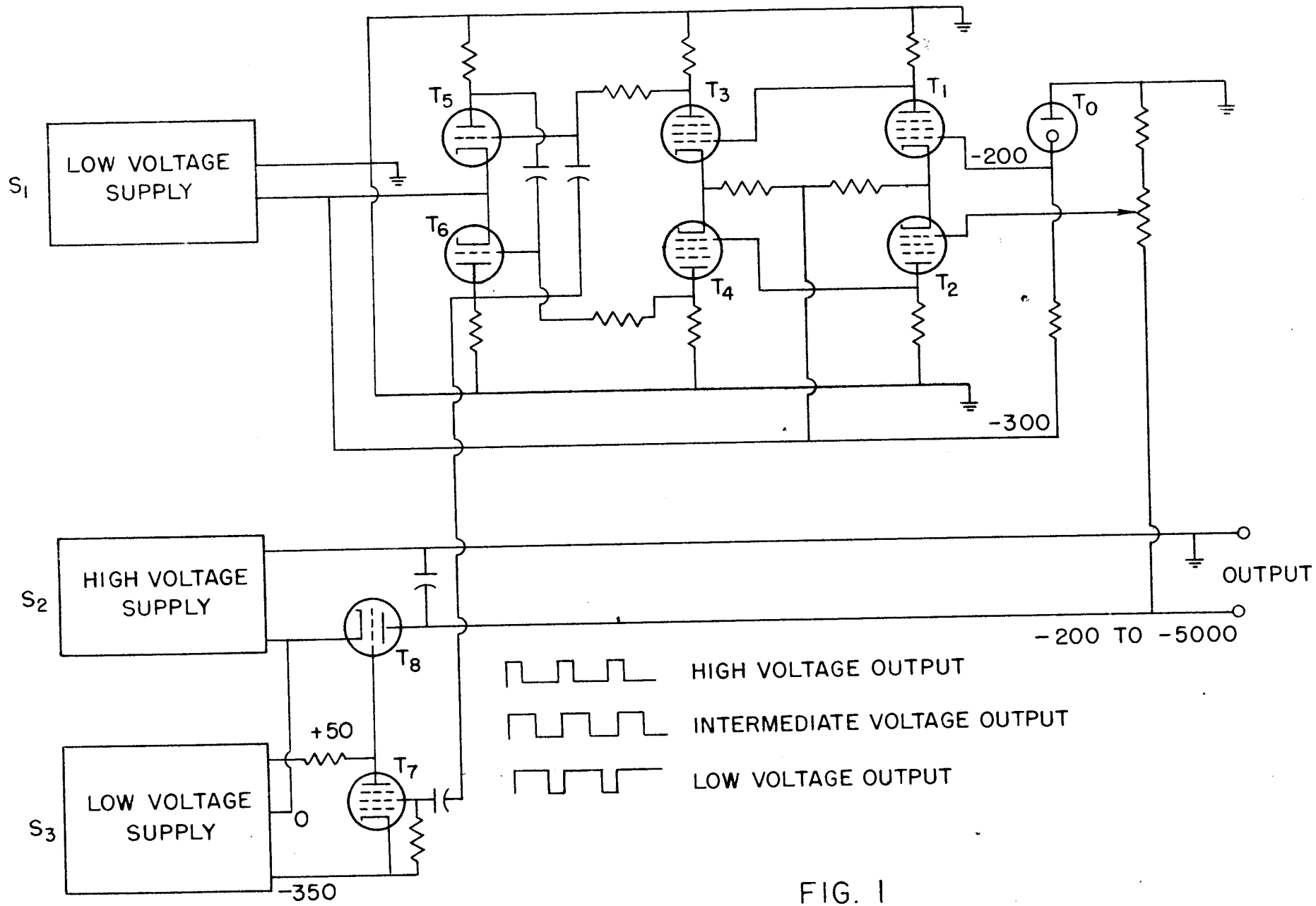

FIG. 1
REGULATED HIGH VOLTAGE POWER SUPPLY

between the limits of -180 volts and -4,000 volts by changing the value of resistance between the high voltage output and the input grid of T_2. The supply is rated for 25 ma throughout this range, although more current can be drawn over most of the operating range. The regulation is 1.6 volts between no-load and rated-load for any operating voltage. This figure can be improved by a factor of three by making only minor circuit changes, if it should become necessary. The rms noise and ripple output is less than one millivolt throughout the operating range.

The method is applicable to the control of much greater currents and voltages without the necessity for major design changes.

HEALTH PHYSICS DIVISION

Portable Fast Neutron Dosimeter (W. M. Hurst). A. The calculations describing a proportional counter applicable to a portable fast neutron dosimeter, where the neutron dosage is indicated directly by a counting rate, are included in a report ORNL 589[1] issued February 17, 1950. Since that date, refinement of some of the assumptions have been made, and experimental counters to test the theories involved have been constructed. Test measurements using various monoenergetic neutron beams provided by equipment at Los Alamos are scheduled to take place about April 10-14, 1950.

B. A report, ORNL 590[2] issued March 21, 1950, describes a Fast Neutron Continuous Monitor and Survey Meter. The survey meter has a count rate meter with full scale values of 50, 1,000, and 10,000 neutrons/cm^2/second. The instrument will discriminate against gamma radiation up to about 10 r/hr. The probe is connected by a 12 foot cable to a power supply permitting the use of the probe as a survey instrument. An alarm circuit is provided. The instrument is powered by the 110 volt 60 cycle line. One model of this instrument is in operation and will be observed for reliability and general performance.

C. Work is proceeding on the design and construction of a proportional counter to have a uniform response or count rate sensitivity related to neutron energy, where the neutron beam may have energies between 0.5 Mev and 15 Mev. The application of this counter is to measure total emission of such sources as Po-Be, Ra-Be, etc., and an objective is increased accuracy over present methods of such source measurements.

D. A proportional counter to have equal sensitivity in all directions is being developed. The application of this counter will be largely for shielding measurements and monitoring.

Portable Alpha Survey Meter (W. M. Hurst). A. Report ORNL 602[3] issued March 14, 1950, describes a proportional counter, gamma discriminating battery operated, survey meter of four pounds total weight. Operation in a high humidity is achieved by the use of silica gel in the probe and some

(1) Hurst, G. S., *Fast Neutron Count-Rate Dosimetry*, ORNL 589 (Feb. 17, 1950).

(2) Farber, R. J., *Fast Neutron Continuous Monitor and Survey Meter*, ORNL 590 (Mar. 21, 1950).

(3) Hurst, W. M., Hurst, G. S, and McDonald, W. B., *A Portable Alpha Survey Meter*, ORNL 602 (Mar. 14, 1950).

effort is now being made to eliminate the silica gel by the use of guard rings. Twelve instruments are ordered for further field testing. Some consideration is being given to the possibility of a commercial production contract.

INSTRUMENT DEPARTMENT

Cockcroft-Walton Generator (R. W. Lamphere). A Cockcroft-Walton generator was built to supply an open circuit voltage of 300 kv of either polarity, and a voltage of 250 kv at 80 ma. Although at present operating from the 60 cycle lines, it will ordinarily receive its power from a 360 cycle generator now on order.

The supporting structure for the components consists of maple, impregnated with "Aristowax," a paraffin with a melting point of 165°F. The wood consisted for the most part of 2 × 6 in. and 4 × 4 in. timbers. These were dried for a period of approximately two weeks under vacuum and at a temperature of 100°C. This was followed by impregnation with wax under 200/psi pressure, which sufficed to drive the wax clear into the center of all sections. The takeup of wax amounted to approximately 70% of the dry weight of the wood, resulting in a final specific gravity of 1.0. Finally, after erection of the structure, all the wood was painted with ceresin. It was found that this reduced the rate of water absorption by at least a factor of ten over straight wax impregnation, pieces so treated absorbing 2% by weight after twenty days immersion in water at room temperature. The resistivity of the treated wood measured 3×10^{11} ohm-cms at a gradient of 2000 volts/cm. After five months operation of the generator there is still no leakage down the support columns measurable on a 20 microampere meter.

The accelerator tube consists of 11 sections of Coors porcelain 12 in. OD and 2½ in. long, with a three foot diameter aluminum spinning at the top to contain ion source and power supplies, and a flat counterpane at the bottom. The tube may be used either as a positive ion tube or as a powerful X-ray tube. Power for operation of accessories may be obtained either from the cascaded filament transformers, which light the Machlett ML-100 rectifiers (up to 2 kw), or from a 500 cycle, 4 kw generator mounted at the 300 kv level and belt driven.

Magnet Analyzer (I. D. Groves). The magnet analyzer, built for use with the 2 Mev Van de Graaff, is capable of bending electrons up to 3 Mev through 90° and of providing a resolution of 500 with 1/2 mm slits. Provision has been made to vary the focal lengths over wide limits by rotatable semi-cylindrical end sections on the pole pieces.

Hydrogen Pumping with Oil Diffusion Pumps (H. Reese). It was recognized that pumping H_2 and other light gases by oil diffusion pumps presents some problems. For example, the D.P.I. VMF-260 pump, rated at 260 liters/sec on air at 5×10^{-5} mm Hg pressure, when actually tested turned out to have a speed of 60 liters/sec at 1×10^{-4} (average for three pumps) on air and only about 10 liters/sec on H_2. Similarly the MC-275 is unsuitable for H_2. However, a new four inch pump of D.P.I. manufacture, their MCF-300, specially designed for pumping H_2, was tested and found to have a maximum speed of 330 liters/sec at 3×10^{-4} on H_2 and 160 liters/sec at 2×10^{-4} on air. This pump works very well when backed by a VKB-8 booster and a Welch 1405 mechanical pump. With Octoil in the MCF-300 and Myvane 10 oil in the booster, optimum heater voltages for maximum speed were found to be 110 and 80 respectively. The speed of the booster on H_2 was found to be 7.8 liters/sec at 18 microns. All tests were run without cold traps.

Diffusion Pump Protector (H. Reese). A protector circuit for diffusion pumps has been designed (Q-972). This circuit responds to fore-vacuum pressure measured with a thermocouple gage. It will shut off pump heaters on failure of the fore-vacuum, and also on failure of cooling water to the pump.

Ion Gage Control (R. W. Lamphere). An ion gage control panel was designed, built, tested, and calibrated to read air pressure directly over the range of 1 to .001 microns. A protector circuit is incorporated to shut it off in case of vacuum failure. The single-stage d-c amplifier and associated components were constructed to reproduce, to an accuracy of 1%, signals from the ion gage. A means of quickly checking the calibration of these parts was incorporated in the instruments.

Thorium and Uranium Hydrides (R. W. Lamphere). It has been found desirable to employ metallic "getters" for the purpose of "pumping" and storing hydrogen isotopes. The properties of activated uranium and thorium have been investigated, and uranium has been found the more suitable for the purpose. The uranium metal should be activated three times (more activations do not alter absorption rates), and then this fine dust can be used to "pump" H_2 down to a pressure of 0.1 micron at room temperature. The Th-H_2 system is similar to U-H_2 but the rate of H_2 absorption at a given H_2 pressure and temperature is slower. However it was interesting to note that the hydride of thorium was not at all pyrophoric, in marked contrast to that of uranium. Also, the activated thorium metal is non-pyrophoric.

Resonance Analyzer (W. G. Stone). (Previously in Biology Division Reports) The construction of metal chambers for the resonance analyzer presented considerable difficulty. Only about one in four has turned out to be adequately vacuum tight. The chamber is necessarily at the end of a rather long, not too large exhaust line, so the pumping speed is not very great. Inasmuch as the pressure in the chamber must not be higher than 2×10^{-6} mm and should be about 10^{-7} mm, a very small leak is fatal.

Present effort is toward all glass construction using the base of a loctal tube for electrical lead-ins. Two such chambers are almost completed, needing only to be sealed into a glass tube. The jig required to hold the loctal base in the glass lathe will be made as soon as possible.

Mathematical analysis of the new system of feedback to the resonance chamber makes it appear to be much superior to the pulse method, and the cost per system should be materially less. This new system comprises an oscillator in which the ions are a link in the feedback system. The problem of balancing out direct coupling between the driving impulse and the probe is easier by more than a factor of ten than with the pulse method.

Current Integrator (F. W. Manning). A current integrator designed for use on the 2 Mev Van de Graaff generator has been placed in operation. The design is due to Dr. O. L. Updike, of the University of Virginia, while participating in this Laboratory's summer visitor program. The device, which will operate with either electron or proton beams, has a minimum resolution of 10^{-8} coulombs in the low range, and 10^{-7} coulombs in the high range. The instrument maintains 1% accuracy up to a rate of five microamperes in the low range and a like accuracy up to a rate of 50 microamperes in the high range. It operates on the principle of allowing the input condenser to change up to a given potential and then discharging it by a definite amount if it exceeds a predetermined charge. Each discharging impulse is recorded on a scaler.

The instrument is to be used in determining the total amount of radiation in a given sample in dynamic radio chemistry experiments.

Logarithmic Electrometer (F. M. Glass). An a-c powered logarithmic electrometer (Q-981) employing a balanced pair of VX-21 diodes and a balanced pair of 5803 triodes has been developed for the Isotope Division. It features low drift and good stability. Provisions are made for plugging in a 10 mv recorder and adjusting the recorder span to track with the panel meter. The

complete specifications are as follows:

Voltage regulation - Line voltage changes between 90 and 135V produce *no* change in meter reading.

Drift - Less than 1% of full-scale in 12 hours.

Range - 2.5×10^{-9} to 2.5×10^{-6} amperes. (other ranges available)

Logarithmic departure - ± 2% of true logarithmic value at any point.

Physical dimensions - 16 in. × 8 in. × 8 in.

Radiation Detection Engineering. During the period of this report thirty-four special ionization chambers and counters were designed, built, and delivered to the Research Divisions. This is over and above the routine counter and chamber fabrication and testing.

Side Window Mica Window Counter Tubes (R. I. Luman). An effort has been made over the past few months to replace the standard thin mica and window type counter with one of identical counting efficiency having a conducting mica window on the side of the counter. This latter type has the characteristic of no hysteresis effect due to charges accumulating on the non-conducting mica as does occur with the usual end window style. Ten have been built and placed in service with promising results. Fifteen more are under construction.

Liquid Level Telemeter (K. H. Kline). A liquid level meter was developed for indicating remotely the level of a chemical solution in an isolated tank. This instrument operates on the principal of immersing two concentric r-f lines, operating as a frequency discriminator, in the tank solution. The d-c output of the discriminator serves as a signal to a servo-mechanism, used to change the frequency of the oscillator that excites the r-f lines. The net result is a null-balance system wherein the oscillator frequency is indicative of liquid level.

The development has been carried to the point where it appears to be a practical solution to the problem of liquid level measurement. The instrument has the restriction that it must be used with highly conducting solutions. Solutions of lesser conductivity such as tap water serve to increase rather than decrease the electrical length of the discriminator, thus inverting the sensing of the instrument as well as making the output of the instrument dependent upon the dielectric constant of the liquid in addition to the liquid level.

Minor difficulties such as a suitable oscillator design to permit operation over wide frequency limits must be solved before the instrument is ready for use. Effort is being exerted in this direction.

Thermistor Temperature Recorder for Meteorological Survey (C. A. Mossman, J. Lundholm, Jr. and P. E. Brown). A relay-rack-mounted control unit, interconnected with a Brown Electronik 4½ sec full-scale balance, curve-drawing recorder, permits measuring air temperature directly to an accuracy of 0.1°F. Five 25 degree ranges are automatically changed and indicated. A five degree overlap on ranges makes the total range 10 to 115°F. The ML 504/AM Bendix Friez thermistor primary element is carried aloft by a captive baloon tethered by the three-conductor cable to the element. Altitudes approaching 3000 feet have been attained.

This equipment has been in operation continuously during this quarter with four scheduled flights per day, weather permitting. A similar unit for the Arco Project is under construction. The major difference is the extended range to -40°F. May delivery is anticipated.

Microformer Extensiometer for Creep Measurements (C. A. Mossman, J. Lundholm, Jr.). Microformers (differential transformers) are adapted to measuring extension and to recording them on electronic recording potentiometers. They have been used to record long time dimensional changes of concrete during setting, creep of standard creep test specimens, and dimensional stability, as one of the two variables in coordinate plotting of length versus temperature during repeated cycling. Two ranges are provided—the ± .005 range has an accuracy of 1%, the ± .025 range has an accuracy of 1/4 of 1%.

Universal Strain Gage Bridge Control Unit (C. A. Mossman). Bonded and unbonded strain gage bridge primary elements as purchased commercially are not interchangeable insofar as the ratio of the microvolts output per volt input at rated maximum is concerned. The subject control unit has a self contained battery supply, *K* factor setting adjustments, a range changing switch and binding posts for connection to a standard d-c potentiometer recorder.

a-c Recording Hyrgometer (P. E. Brown, C. A. Mossman). Aminco Dunmore elements covering the range 2 to 90% relative humidity with nine plug-in units are used with an a-c bridge to reproduce on a recording potentiometer the microampere coordinate of the microampere versus relative humidity curves supplied by American Instrument Company. Stability of the system is equal to that using rectified output to the potentiometer.

Crystal Growing Instrumentation and Control (S. A. Hluchan). Single crystals of anthracene several square inches in area up to one inch thick are being grown in an evacuated chamber having a temperature controlled cold ceiling. Two interconnected temperature controllers maintain a variable controlled differential temperature of the cold ceiling from that of the molten anthracene. Proper manipulation of program control over a period as long as ten days permits growth of a crystalline mass which is successively formed, annealed and cooled.

Agar Counting (E. W. Burdette). A semi-automatic counter, to facilitate more rapid and accurate counting of bacteria colonies in agar was designed for the Biology Division. This counter reduces personnel fatigue, and human error associated with manual counting.

Three different circuits have been designed and used satisfactorily. The circuit now being used is designed to produce approximately 10 ma of current flow through the Agar upon completing the circuit. Too large a current will boil the Agar, and too small a current tends to make counting less reliable. The positive electrode has a tendency to heavily corrode when using silver or copper wire tips. Nichrome wire No. 16 or 18 works very well.

Modification of Atomic Instrument Company Scalers (C. G. Goss). Due to recurrent failures, an investigation was made on Atomic Instrument Company scalers by members of the Physics and Instrument Departments to determine the difficulties. Back conduction of crystal diodes under high ambient temperatures, cathode resistors for 6SL7 stages that were on the low side of their tolerance, and triodes whose characteristics varied considerably from those used to design the scaling stages caused much of the difficulty.

Some seven modifications to the Model 101-M circuit and fifteen changes in the Model 101-AA circuit have been made. These suggestions have been transmitted to the manufacturer.

Instrument Construction and Maintenance (W. J. Ladniak). The following instruments were built in the Instrument Fabrication Shop for use in research work:

Linear Variable Differentiating Transformer Amplifier	8
Count Rate Meter	1
a c Electrometer	5

Differential Discriminator	3
A-1 Amplifier	13
Sigma Amplifier	8
Monitron	3
Magnet Amplifier	1
Total	42

Besides the above work, there were 89 instruments built and 75 auxiliary parts made up for various jobs throughout the plant.

In the Instrument Service Group, the number of instruments serviced is as follows:

MONTH	NO. OF INSTRUMENTS SERVICED	NO. OF FAILURES
January	206	486
February	227	545
March	253	623
Total	686	1654

A percentage of instrument failures is as follows:

Transformers replaced	1.51%
Number of G-M tubes replaced	9.10%
Number filter condensers replaced	3.23%
Number by-pass condensers replaced	1.03%
Number resistors replaced	1.88%
Number instruments calibrated	3.63%
Number vacuum tubes replaced	24.20%
Miscellaneous failures	55.52%
Total	100.00%

It was found that no hermetically sealed transformer was replaced and instruments containing hermetically sealed transformers give little trouble.

The major portion of G-M tube replacements were in Health Physics survey instruments. These instruments, used in frisking and air monitoring, are exposed to all elements in the areas. A majority of the vacuum tubes replaced were in scalers. Scalers represent a high percentage of the instrument usage in the plant. The miscellaneous failures are due to mechanical failures of allied parts which go with the instruments to make it operate properly, and may be anything from pilot lights to recorders.

PHYSICS DIVISION

Electron Energy Studies with the Anthracene Scintillation Spectrometer (J. I. Hopkins). Some results concerning the response of the anthracene scintillation counter to monoenergetic electrons have been reported for the energy range 50 Kev to 665 Kev.[1] Further studies have been made in the low energy range and in the energy range 665 Kev to 3200 Kev. The experimental arrangement was the same as described before except for a few necessary alterations.

An aluminum foil having a thickness of 0.2 mg/cm^2 was used to cover the crystal for the low energy measurements instead of a previously used 1.4 mg/cm^2 thickness. Approximately 40 microcuries of Ru^{106} on a thin film of formvar served as a source of electrons for the energy range above 665 Kev. A mumetal shield, in addition to the previously described magnetic shielding, was fitted closely over the photomultiplier tube to prevent variations in the magnetic field in the region of the tube.

It was found necessary to use magnetic compensating coils around the multiplier for energy studies above 1900 Kev. Above this energy the magnetic field due to the lens spectrometer was sufficient to cause an appreciable distortion in the differential count distribution with a consequent lowering of the pulse height value. A test for no distortion was made by using a Cs^{137} source before the crystal but with no source in the lens spectrometer. Counting rate pulse height data were taken on the Cs^{137} conversion line for various currents through the lens spectrometer coil. With the arrangement described above no pulse height shifts greater than 0.5% were observed.

Counts per second versus pulse height data were recorded for each chosen energy from 30 Kev to 3200 Kev and the differential curves plotted to determine the pulse height giving the maximum number of counts per second. Some typical data are shown in Fig. 2 where the counts per second have been normalized and plotted against the energy of the electrons in Kev. These curves are per Gaussian distribution curves fitted to the experimental data.

If one writes the distribution equation in the form

$$n(E) = A\ e^{-(\Delta E/\sigma)^2},$$

(1) Hopkins, J. I. "The Reponse of Anthracene Scintillation Counter to Monoenergetic Electrons," *Phys. Rev.* 77, 406 (1950).

UNCLASSIFIED
DWG. 8349

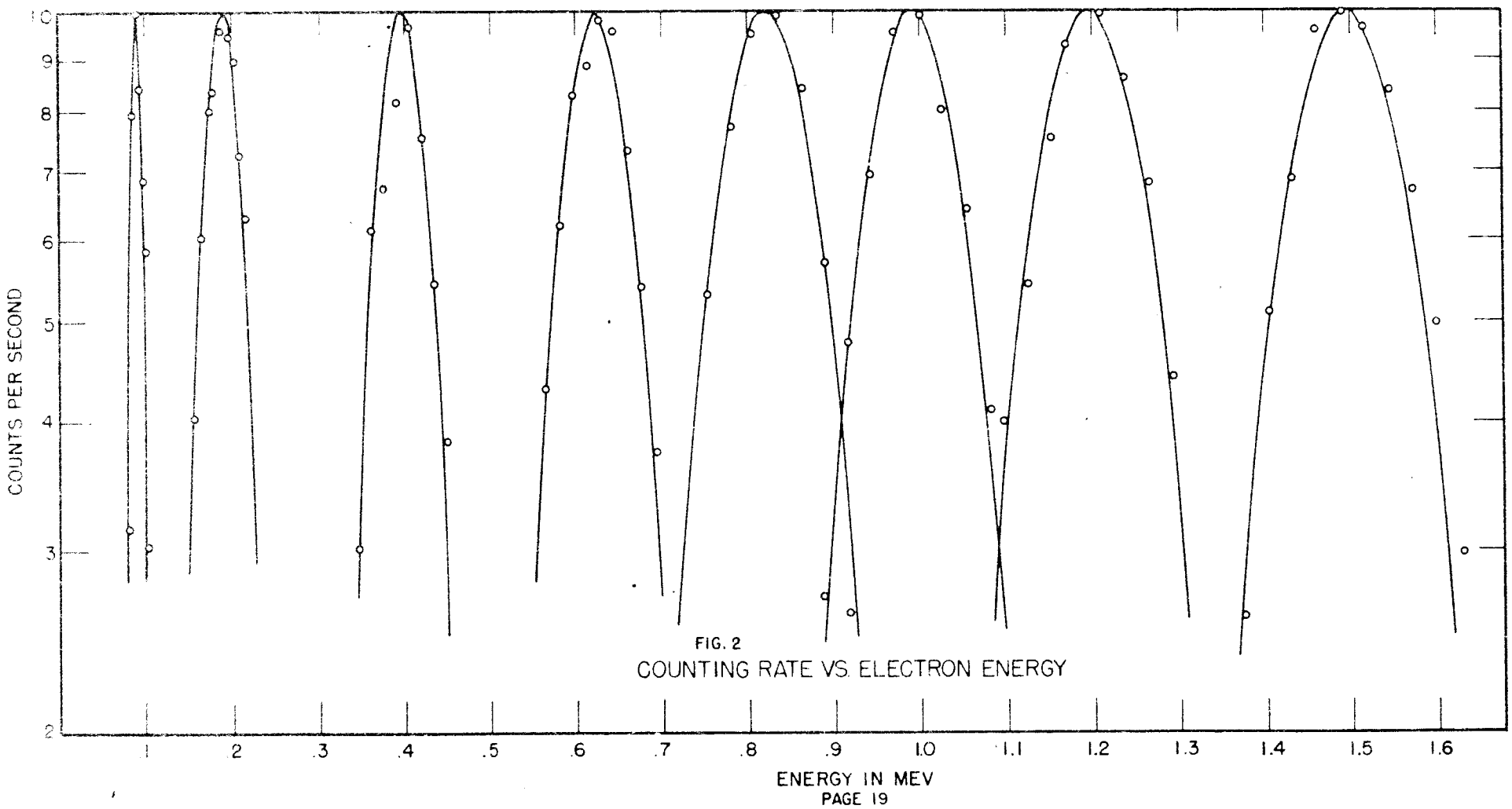

FIG. 2
COUNTING RATE VS. ELECTRON ENERGY

then $n(E)$ represents the number of counts per second for an energy different from the mean energy (the energy corresponding to the maximum of the differential curve) by an amount ΔE. The constant A has been chosen such that when $\Delta E = 0$, $n(E)$ is equal to ten counts per sec The constant a then represents the line half-width at $1/e$th the maximum counting rate. If one plots a^2 against electron energy, the points follow a linear curve as closely as could be expected. This graph is shown in Fig. 3. Tabulated data giving the results of these line width-energy studies are shown in Table I.

TABLE I

ENERGY (Kev)	a (Kev)	a^2 $(\text{Kev})^2$	$a/E \times 100$
88.9	9.3	$.086 \times 10^3$	10
189.	34.	1.1×10^3	18.
397.	46.	2.2×10^3	12.
624.	63.	4.0×10^3	10.
991.	89	7.9×10^3	9.0
1200.	100.	9.9×10^3	8.3
1500.	108	$12. \times 10^3$	7.2

In making pulse height-energy studies two crystals were used. A crystal of 1.29 ± .02 cm thickness was used to study the energy range 30 Kev to 1900 Kev and a second crystal of 2.50 ± .02 cm thickness was used to study the energy range 800 Kev to 3200 Kev. This was done in order to be sure that some of the electrons were not passing completely through the crystal. The results of these studies are shown in Figs. 4 and 5. A definite linear relation is observed to exist between pulse height and energy from 125 Kev to 1900 Kev and from 800 Kev to 3200 Kev. Both of these curves, when extended in a straight line, intersect the energy axis at approximately 25 Kev. Experimental data below 125 Kev show a decreasing slope with the curve directed toward the origin.

In order to investigate the response of a thin crystal to electrons which have sufficient energy to pass through the crystal completely, a crystal thickness of 0.38 ± .02 cm or 471 mg/cm^2 was used. According to absorption data, electron energies up to 1100 Kev should be absorbed in anthracene of this

UNCLASSIFIED
DWG. 8351

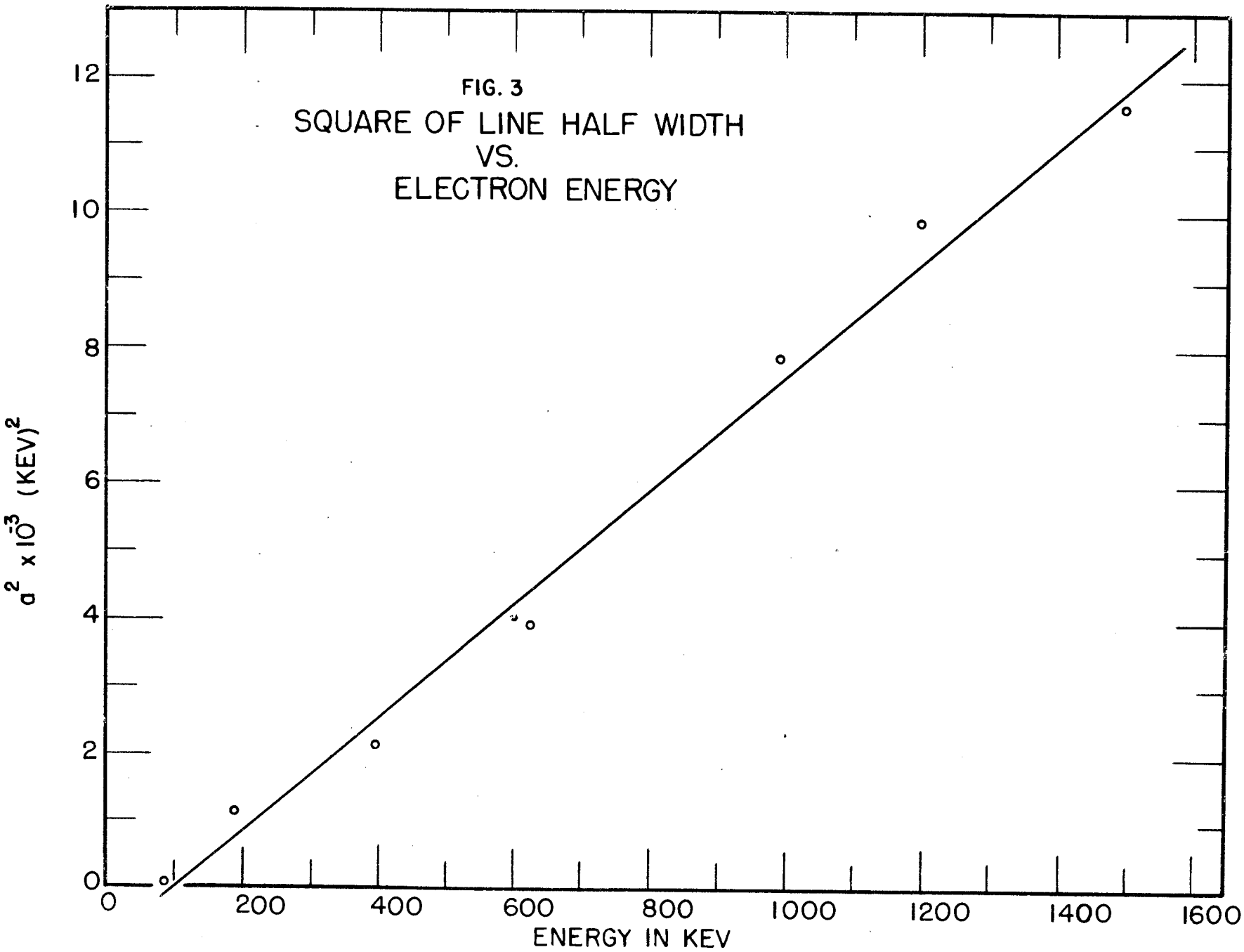

UNCLASSIFIED
DWG. 8350

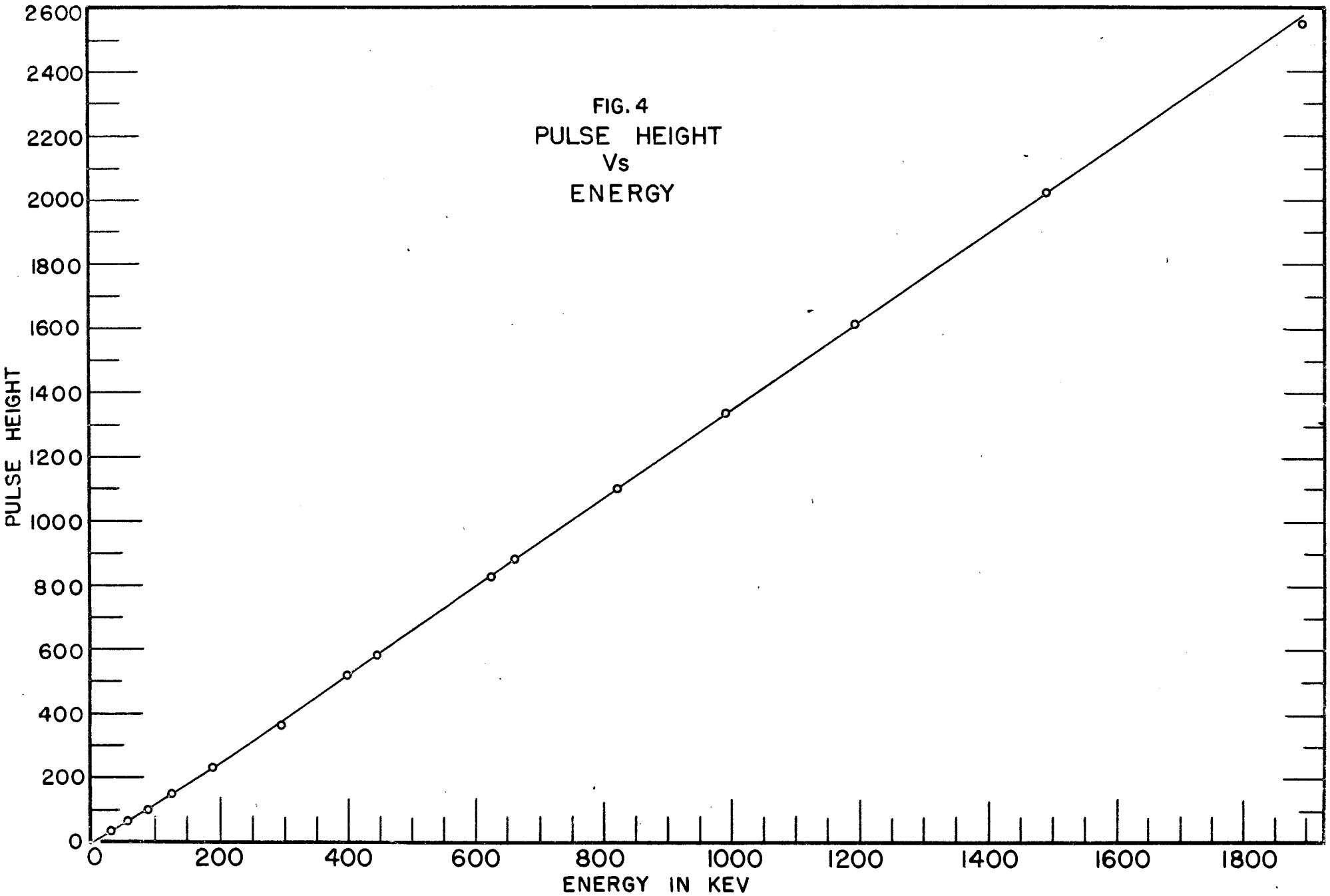

UNCLASSIFIED
DWG. 8594

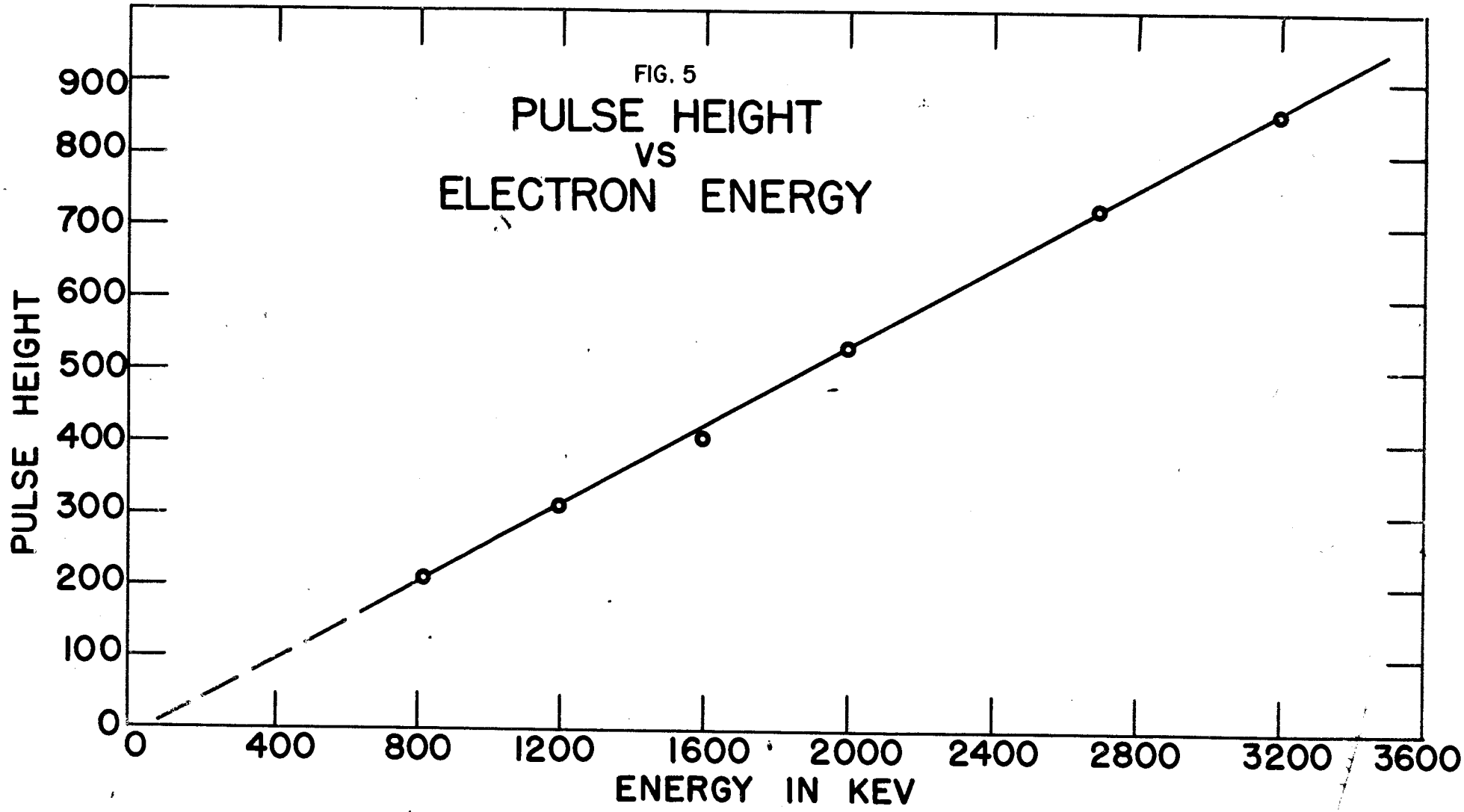

FIG. 5

UNCLASSIFIED
DWG. 8421

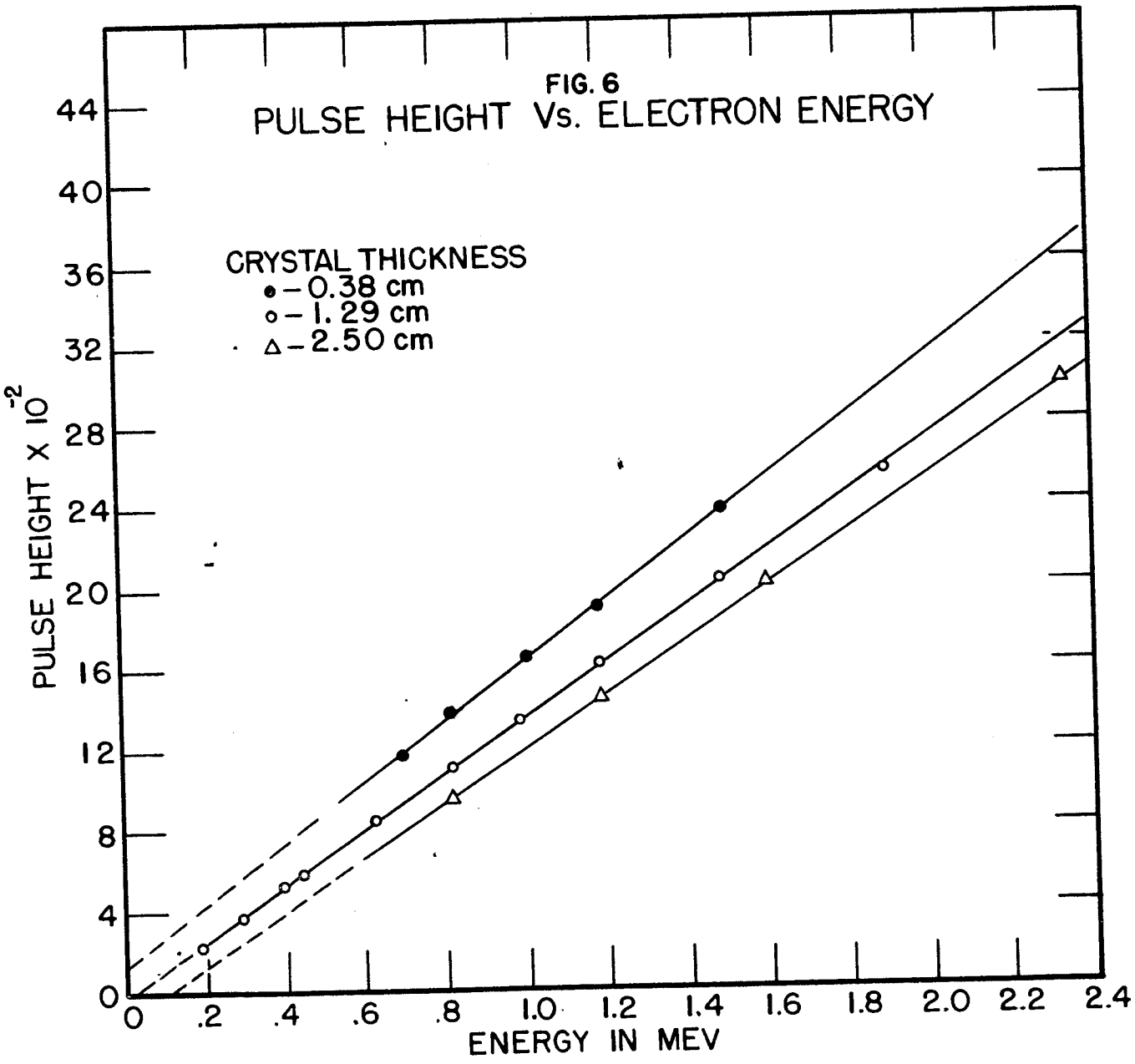

thickness. The pulse height-energy curve for this crystal was found to be quite linear up to 1500 Kev. At 1800 Kev the differential count distribution curve became so broad that the pulse height value was not defined sharply but could still be located very near the same straight line. The distortion in the differential curves above 1100 Kev gives effectively a decreased counting rate with increase of energy as a result of the scintillation spectrometer being able to see fewer and fewer light pulses with amplitudes proportional to energy. Pulse height-energy curves for the three crystal thicknesses used are shown in Fig. 6 for a limited energy range.

It is observed that thin crystals give larger pulse heights for a given energy than the thicker crystals. This is probably due to the fact that thin crystals are clearer and of better quality in addition to making for the production of photons nearer the photosensitive surface. Larger counting rates are obtained with the two thicker crystals but this can be partially accounted for in that they have larger cross-sectional areas. The counting rates may be more nearly equalized if a lucite light "piper" 1-5/8 inches in diameter and 3/4 inch long is used between the crystal and the photomultiplier tube to distribute the light over a larger photosensitive area. The use of a light "piper" however gives a 10 to 15 percent decrease in pulse height depending upon the efficiency of the optical system.

It is estimated that the error in determining the energy of electrons by the pulse height differentiating method is not greater than 1% for the energy range studied. Possible unaccountable errors in these experiments may be due to (1) background variations, since the spectrometer is located in the pile building, (2) temperature changes in the region of the photomultiplier and crystal, (3) generator hash in the magnet current at times, and (4) temporary magnetic variations near photomultiplier tube.

Single Channel Differential Pulse Height Selector (J. E. Francis, P. R. Bell and J. C. Gundlach). A single channel analyzer has been built for measuring the energy spectrum obtained from scintillation counters and proportional counters.

The analyser contains a pulse height selecting, non-overload, feedback amplifier, followed by two pulse height selectors, a memory circuit, and an anti-coincidence circuit.

Figure 7 is a circuit diagram of the analyser. The feedback amplifier amplifies a segment of the pulse distribution as shown in Fig. 8.

The first tube of the amplifier (V-1) is a cathode follower whose grid bias can be varied over a range of one hundred volts. This allows the d-c level of an input pulse to be varied over a range of one hundred volts. The cathode is coupled to the grid of V-2 through a current limiting resistor. An input pulse must be larger than a certain amount (determined by the bias on V-1) before V-2 gives an output pulse. The grid of V-2 is prevented from going too far positive by a 6AL5 diode which starts to conduct after the grid has reached a certain value. The two 1N34's on the plate of V-2 are biased ten volts apart. The upper one prevents an output signal until V-2 is on the linear portion of its characteristic. The lower one limits the size of the output pulse so that none of the following tubes are overloaded. V-2 together with V-4 and V-5 comprise a conventional feedback loop with a gain of ten. This completes the non-overload amplifier.

The signal from the amplifier is fed into two pulse height selectors.

The lower pulse height selector (V-7, V-8, V-12 and V-13) consists of a long tailed pair followed by a multivibrator. It is biased so that it fires on very small pulses. A pulse is taken from each plate of the multivibrator. The pulse taken from the plate of V-13 is used to turn on the memory circuit by cutting off V-18. The pulse taken from the plate of V-12 is differentiated by a shorted delay line to obtain two pulses, one which marks the beginning and one which marks the end of the input pulse. The pulse marking the end of the input pulse is used to hold the memory circuit on, and is also fed to one input of the anti-coincidence circuit.

The upper pulse height selector (V-6, V-7, V-8, V-9 and V-11) is similar to the lower pulse height selector. V-9 is a constant current tube, and is used to compensate for the grid to cathode capacity of V-6. The upper pulse height selector fires only if the pulse is above a certain value determined by the bias on the grid of V-6. This determines the ΔE or "window width." The output pulse from V-10 is fed into the memory circuit.

The memory circuit (V-18, V-19 and V-22) controls one input of the anti-coincidence circuit, which is the grid of V-20. Normally when there is no input pulse to the circuit the grid of V-20 is held down by current flowing from the plate of V-18 through V-19 to ground. When a pulse from the lower pulse

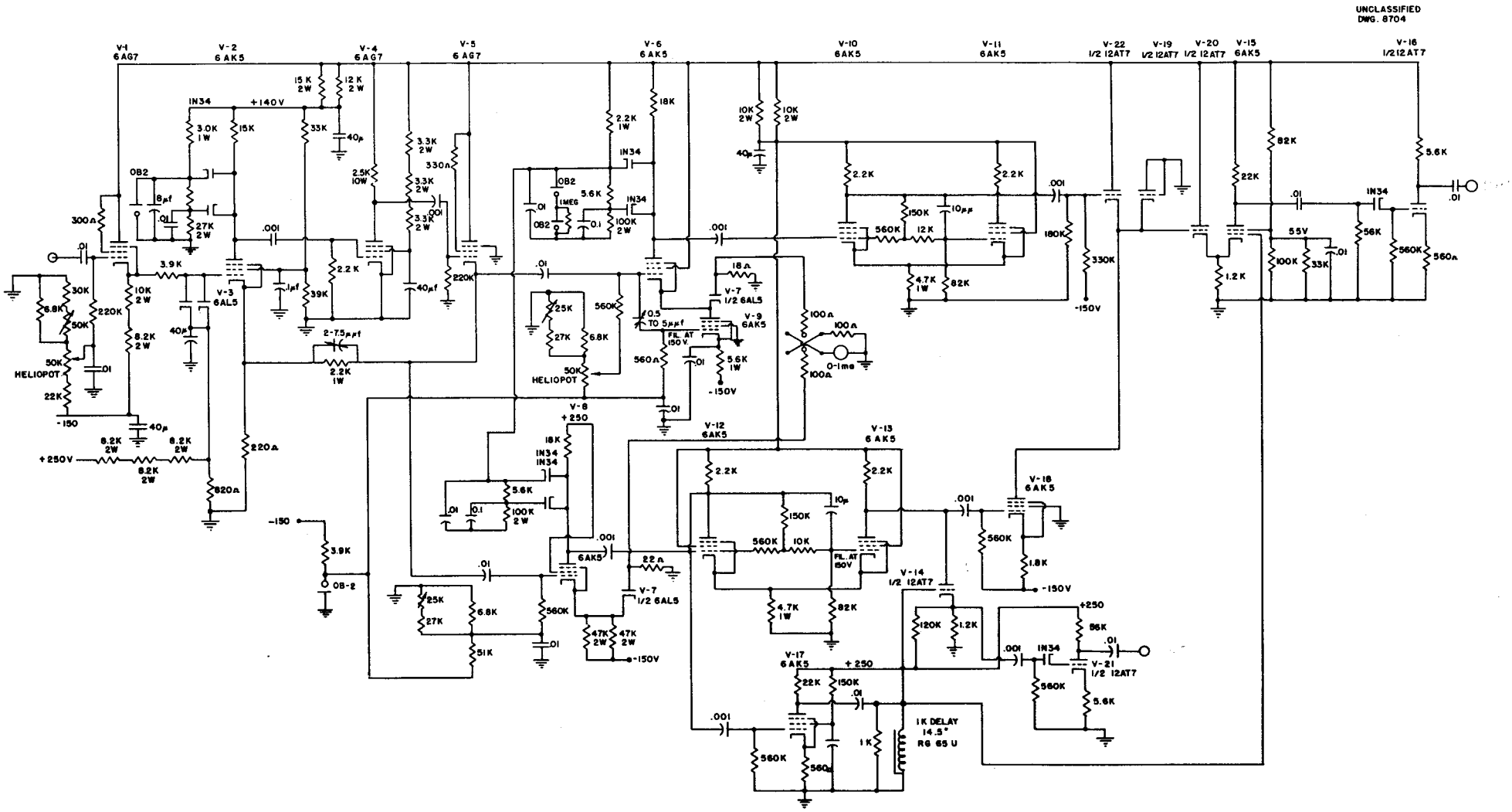

Fig. 7
DIFFERENTIAL PLUSE HEIGHT ANALYSER

UNCLASSIFIED
DWG. 8867

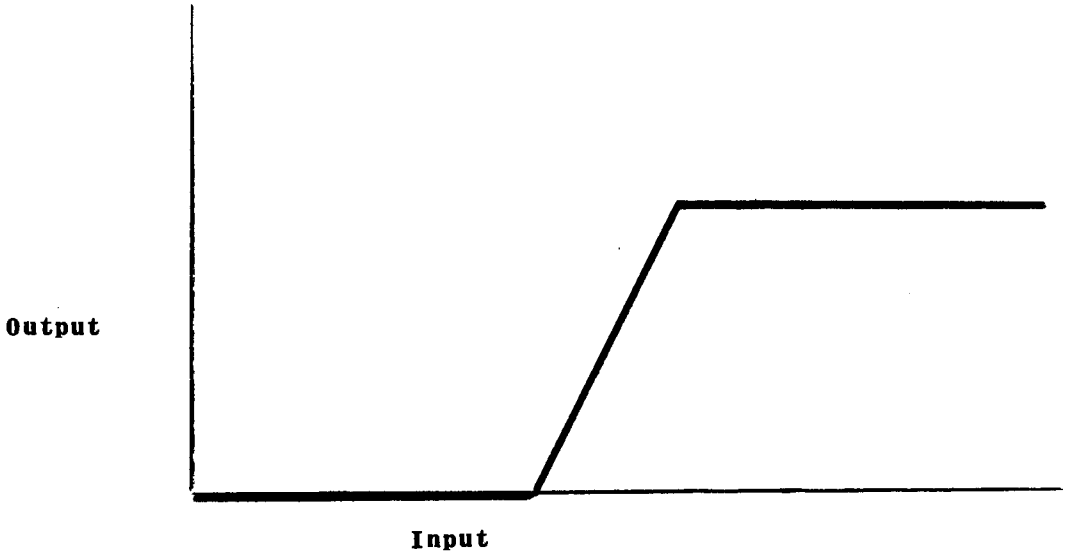

Fig. 8

height selector turns off V-18 the grid of V-20 is left floating and stays at approximately the same value. If, however, the upper pulse height selector also fires, a pulse is put on the grid of V-22 which pulls the grid of V-20 up. The grid of V-20 will stay up preventing any output from the anti-coincidence circuit. It will not come down until after the differentiated pulse from the lower pulse height selector has disappeared from the grid of V-18. When the grid of V-18 no longer has a pulse on it the tube starts to conduct and resets the memory circuit.

Therefore, if the upper pulse height selector fires, the memory circuit provides one input to the anti-coincidence circuit until after the differentiated pulse from the lower pulse height selector has entered the anti-coincidence circuit. When only the lower pulse height selector fires there is no coincidence; therefore, there is an output pulse from V-18 which is lengthened and amplified by V-16 to get a larger and longer pulse to drive a scalar.

The memory circuit is necessary because the pulse which the upper pulse height selector sees is of shorter duration and occurs after the pulse has entered the lower pulse height selector. Without the memory circuit it is possible to get an anti-coincidence when actually there is a coincidence.

The pulse which marks the end of the pulse from the lower pulse height selector is also taken from the cathode of V-19, lengthened, and amplified by V-21 to get the total number of pulses above a certain value.

A Multi-Channel Pulse Sorter (G. G. Kelley). The scintillation spectrometer and other devices may be used to produce voltage pulses whose amplitudes are proportional to the energy of an incident radiation. In order to determine the energy spectrum of a source of radiation, some means of sorting voltage pulses according to size must be employed. The most direct method, and the least satisfactory one, is to determine the number of pulses in a fixed time interval whose amplitudes are greater than a certain value, by means of a pulse height discrimination. When this has been done for two values of amplitude, the difference is a statistical measure of the number of pulses expected per time interval with amplitude lying between these values. The basic difficulty with this method lies in the fact that the statistical accuracy of the individual counts at two amplitudes varies as the square root of the number of counts. If N_1 counts are observed greater than A_1 and N_2 counts are observed greater than A_2, then the computed value for the counts between A_1 and A_2 will

have a standard deviation of approximately $\sqrt{N_1 + N_2}$ if N_1 and N_2 are large. But a count of the number of pulses actually falling in the interval between A_1 and A_2 will have a standard deviation of the order of $\sqrt{N_1 - N_2}$. Also, a given degree of precision in amplitude discrimination must be multiplied by the increment of amplitude to determine the precision of the spectrum. Thus if a discriminator can be set to a given value within 0.1% of full scale, an error of 20% may be made in the determination of the number of pulses lying in a 1% increment. It may be seen, therefore, that for greater accuracy two discriminators should be used with a means of controlling the difference between their levels to within, say, 1% or 2%. With the total pulse voltages available from pulse amplifiers, this precision requires further amplification of the portion of the spectrum under observation by a factor of between five and ten. This amplification may take place in the circuit, either before or after the desired increment (called the "window") has been set. Requirements of this amplifier are rather severe. Its gain must be constant for a wide range of pulse shapes and speeds, since it may be called upon to amplify either the whole of a small pulse or only the top few percent of a large pulse, and its gain stability with time must be as great as the overall stability required. Discriminators too must be designed with care because their voltage stability divided by the gain of the increment amplifier preceding them must be 0.005% for a 1% window stability. This stability must be with respect to signal speed as well as time unless some means of standardizing the pulse shapes applied to the discriminators is used. For convenience, circuits may be added following the discriminators to provide no output except when a pulse trips only the lower discriminator. P. R. Bell, J. Gundlach, and J. E. Francis of this division, and E. Fairstein, of the Chemistry Division, have developed independently two single channel analyzers according to the principles outlined above.

A logical improvement in the interest of rapid accumulation of data is the operation of many single channel analyzers in parallel. The difficulty is primarily one of complexity. About 20 tubes are required in the analyzer itself for the operation of a single channel unit. Multiplying the space equipment and power required for one unit by, say, ten is hardly practical. Considerable simplification may be achieved, however, by combining functions. The only necessary duplication is in the discriminators.

A ten channel analyzer containing ten adjoining channels, each of which may be as narrow as 1% of the signal amplitude, is in the process of completion.

It operates in such a way that all unnecessary duplication is eliminated, and by means of a time sequencing arrangement also eliminates the need for anti-coincidence circuitry.

Figure 9 is a block diagram of this unit. A maximum of about 100 volts of signal, available from an A-1 amplifier, is applied at the input. The "d-c Level Adjust," a Helipot, selects a ten volt portion of the input spectrum by changing the d-c level of the signal with respect to the input cathode of the amplifier. This amplifier is similar to one of the feedback groups in an A-1 amplifier except that it has been modified for overloading signals. The possibility of using this type of amplifier with modifications was suggested by P. R. Bell. A similar one is used in the single channel unit described elsewhere in this report. Following the amplifier is a pulse lengthening circuit consisting of two 1N38 diodes normally held conducting by current tubes making the system linear. These current tubes are cut off by operation of the multivibrator which occurs for pulses greater than about three volts. The first diode responds very rapidly to the rising input signal but holds at maximum value for a relatively short time. The second diode maintains a nearly constant level proportional to the maximum value of the signal for the necessary time. The discriminators are type 6BN6 tubes followed by a Schmidt trigger circuit similar to that used in the pulse height discriminator in the A-1 amplifier. These 6BN6 tubes have rather unusual properties. They have two high mutual inductance, sharp cut-off grids, neither of which draws appreciable current when less than 50 volts positive. Their grid voltage-plate current stability seems unusually good. The lengthened pulse is applied to the number 1 grids of 12 of these tubes in parallel. The d-c level of the pulse is made progressively five volts less negative from tube to tube by a biasing arrangement. A given size pulse will cause the number 1 grids of some of the tubes to rise high enough to allow these tubes to conduct. Plate current will not flow, however, because the number 3 grid of all of the tubes are all biased beyond cut-off. They are returned to a biasing arrangement which causes the d-c level to be five volts more negative from tube to tube. These grids are raised in potential together, at their respective d-c levels, by the sweep generator which is started by the triggering of the multivibrator. Thus the tubes are allowed to operate in time sequence until the first tube whose number 1 grid is above cut-off is reached. Operation of this discriminator provides an input pulse to its respective scaler and at the same time returns the multivibrator to its no-signal condition and resets the pulse lengthener and

UNCLASSIFIED
DWG. 8868

Fig. 9

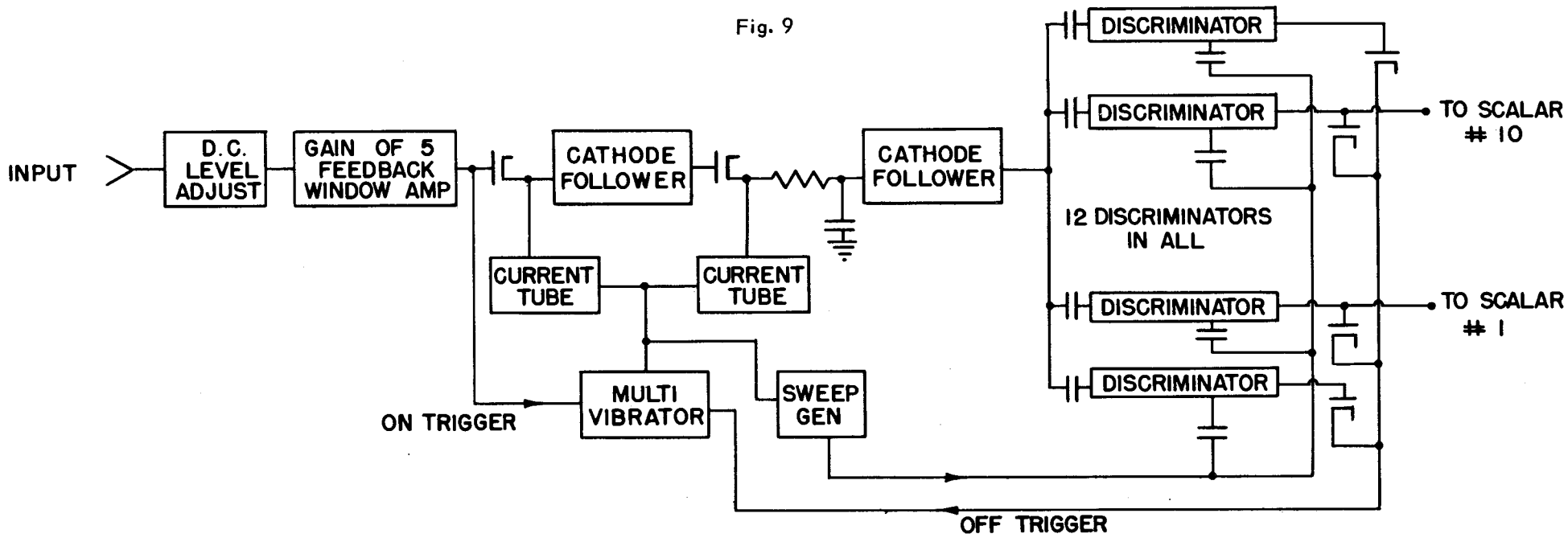

sweep generator. By this means none of the other discriminators are permitted to operate. About five microseconds are required to search all channels and reset the unit.