OFFICIAL USE ONLY

MARTIN MARIETTA ENERGY SYSTEMS LIBRARIES
3 4456 0360369 7

ORNL 223
Chemistry-General
9A

Gr. School Lib

DESIGN AND TESTING OF A TEFLON LINED PLUG VALVE

OAK RIDGE NATIONAL LABORATORY
CENTRAL RESEARCH LIBRARY
CIRCULATION SECTION
4500N ROOM 175
LIBRARY LOAN COPY
DO NOT TRANSFER TO ANOTHER PERSON
If you wish someone else to see this report, send in name with report and the library will arrange a loan.
UCN-7969 (3 9-77)

OAK RIDGE NATIONAL LABORATORY
OPERATED BY
CARBIDE AND CARBON CHEMICALS DIVISION
UNION CARBIDE AND CARBON CORPORATION
UCC
POST OFFICE BOX P
OAK RIDGE, TENNESSEE

OFFICIAL USE ONLY

[redacted]

Report Number: ORNL-223
This document consists of
12 pages.
No. 9 of 118 Series A

Contract No. W-7405, eng 26

CHEMICAL TECHNOLOGY DIVISION

Unit Operations Section

Design and Testing of a Teflon Lined Plug Valve

Authors:

C. D. Watson
G. A. West

DECLASSIFIED Per Letter Instructions Of A.E.C. 9-7-50

Period of Work: 11-7-50 [signature] SUPERVISOR CENTRAL FILES

April 29, 1948 - August 9, 1948

DATE ISSUED:

JUN 28 1950

OAK RIDGE NATIONAL LABORATORY
Operated by
CARBIDE AND CARBON CHEMICALS DIVISION
Union Carbide and Carbon Corporation
Post Office Box P
Oak Ridge, Tennessee

[redacted]

MARTIN MARIETTA ENERGY SYSTEMS LIBRARIES

3 4456 0360369 7

[redacted]

TABLE OF CONTENTS

		Page
1.0	Abstract	4
2.0	Introduction	5
3.0	Summary	5
4.0	Experimental	6
	4.1 Leakage Tests	6
	4.2 Durability and Anti-Galling Test	6
5.0	Discussion	7
6.0	Conclusions and Recommendations	9
7.0	Appendix	
	7.1 Figure 1 - 1/4" Teflon Lined Plug Valve (Exploded View)	10
	7.2 Figure 2 - 1/4" Teflon Lined Plug Valve (Assembled)	11
	7.3 Figure 3 - 1/4" Teflon Lined Plug Valve (Working Drawing)	12

[redacted]

[redacted]

1.0 Abstract

A "Teflon" lined (lubricated) stainless steel plug valve has been designed and tested. It was shown to be durable, self-lubricating and leak-proof.

[redacted]

[redacted]

2.0 Introduction

Valves normally used in solution processing by the chemical industry have been proven, in many cases, to be inadequate for the processing of radiochemical solutions. Basic faults are: leakage, solution "hold-up", entrapment of radioactive materials by packing glands, and failure to accomodate a variety of solutions (acids, caustics, solvents).

For example, commercial plug valves cannot be used because of loss of lubricant to the solutions they carry which results in (1) leakage, and (2) undesirable solution contamination.

This report presents test results and working drawings for a "Teflon" lined (lubricated) plug valve designed to eliminate the basic faults and objections listed above. "Teflon" (polytetrafluoroethylene) possesses an inherent quality of waxiness or self-lubrication. It was thought that permanent lubrication and positive sealing would result from interposing a liner of this material between a plug and valve body, thereby increasing the usuable scope of plug valves to radiochemical processes heretofore excluded.

3.0 Summary

It has been demonstrated that a durable, permanently lubricated, leakproof plug valve - see Figures 1, 2 and 3 - can be constructed from stainless steel and lined with "Teflon". The "Teflon" lining greatly excells conventional lubricants. Acidic, caustic and various solvent solutions have been handled over a period of two years with no apparent effect on self-lubrication properties or durability of such linings.

[redacted]

4.0 Experimental

An experimental 1/4" Teflon lined stainless steel plug valve was designed and a working model constructed - see Figures 1, 2 and 3 - to determine (1) leak tightness (2) lubrication or anti-galling properties, and (3) durability of the "Teflon" lining.

4.1 Leakage Tests

The experimental valve was placed on a test stand at loose assembly and final adjustment for leakage tests made as follows: (a) the retainer ring was screwed down tightly against the liner (b) spring pressure on the plug was then adjusted until no leakage resulted over a period of 10 minutes at 60 psig water head. Pressure exerted by the spring on the plug under these conditions was determined to be 52.5 lbs. mass.

This method of assembly proved to be superior over other methods. For example, leakage is promoted if the spring pressure on the plug is adjusted before pressure is brought to bear on the liner by the retainer ring.

The valve was leak tested against water at 60 psig for 120 hours and hexone at 21 psig for 48 hours. No leakage resulted in either case.

4.2 Durability and Anti-Galling Test

Test for durability and self-lubricating properties (anti-galling) was made with hexone at 21 psig. The valve was manually turned "off and on" for 2000 complete cycles with no apparent change in lubrication properties.

[redacted]

Durability and Anti-Galling Test (continued)

On dismantling the valve, a small thin film of "Teflon" was noted clinging to the sides of the stainless steel plug. No leakage resulted from this condition which was probably caused by the sharp edges of the plug ports or it is possible that sufficient heat to cause this condition was generated during the 2000 cycle test (1-1/2 hours).

Field data over a period of two years are now available which shows that the "Teflon" lining is quite durable and remains self-lubricating and leak proof in the presence of acidic, caustic and various solvent solutions. Valves similar to the test model in Figures 1, 2 and 3 have been made in multi-port models to serve as samplers. All have given leak proof service over an operating pressure range 5 psig - 100 psig. Several "Teflon" lined plug valves were dismantled after several months of service. In every case, the lining was intact (no erosion) and sealing and lubrication properties were definitely improved when removed for inspection. It was decided that the improved properties resulted from a gradual lapping of the liner by the smooth stainless plug. This suggests an advantage for "breaking in" each valve before it is placed in service.

5.0 Discussion

Approximately twenty-five "Teflon" lubricated valves (single and multi-port of various designs) have been constructed. In every case, the tapers of the "Teflon" lining and stainless steel body were machined on a lathe. This led to some interesting observations on construction methods and materials. A list follows: [redacted]

Discussion (continued)

(a) It is important that all tapers be cut from one "set-up" of the lathe and that final cuts on the stainless steel plug be ground, otherwise, improper sealing will result. "Teflon" cannot be lapped by normal methods and it is notorious for "rebounding" under a lathe tool. A fine finish is obtainable, however, with small cuts and a sharp tool. High speed tools give satisfactory finishes, however, the best finish obtained thusfar was with a sapphire tipped tool taking cuts of 5-10 thousandths inch. The "Teflon" stock should be white, because the gray variety contains impurities detrimental to good sealing and lubricating action.

(b) The thickness of the plug liner is important because of "cold creep". In the models shown, some difficulty in turning the plug was experienced if the plug remained immobile for a long period of time. This is due to a definite, but not serious, tendency of the lining to flow into the plug parts - the thicker the liner the greater the tendency to flow. A generous chamfering or rounding of the plug ports eliminates this effect and prevents cutting of the liner and subsequent leakage.

(c) It is not possible to produce desirable thin "Teflon" liners by the lathe method. Thin liners could probably be produced by casting the unpolymerized "Teflon" monomer around a blank plug. Commercial valve manufacturers sometimes use this technique around polished valve stems in packing glands.

[redacted]

6.0 Conclusions and Recommendations

It was concluded from favorable laboratory and field leakage and wear test results that "Teflon" valve linings were very durable and can be adequately contained to serve as a permanently self-lubricating leakproof liners for a variety of plug type valves useful in radiochemical processing.

"Teflon" not only replaces conventional plug valve lubricants, which contaminate solutions they contact, but greatly extends the type of solutions plug valves can now be made to handle.

It is recommended that the feasibility of pre-casting Teflon liners be investigated because the production of Teflon linings by means of a lathe is difficult, time consuming and wastes Teflon stock. A casting method probably would decrease the cost of Teflon valves to compete with other types of corrosion resistant valves on a mass production basis.

Clyde D. Watson

Clyde D. Watson

CDW/rcp

[redacted]

[redacted]

#6472

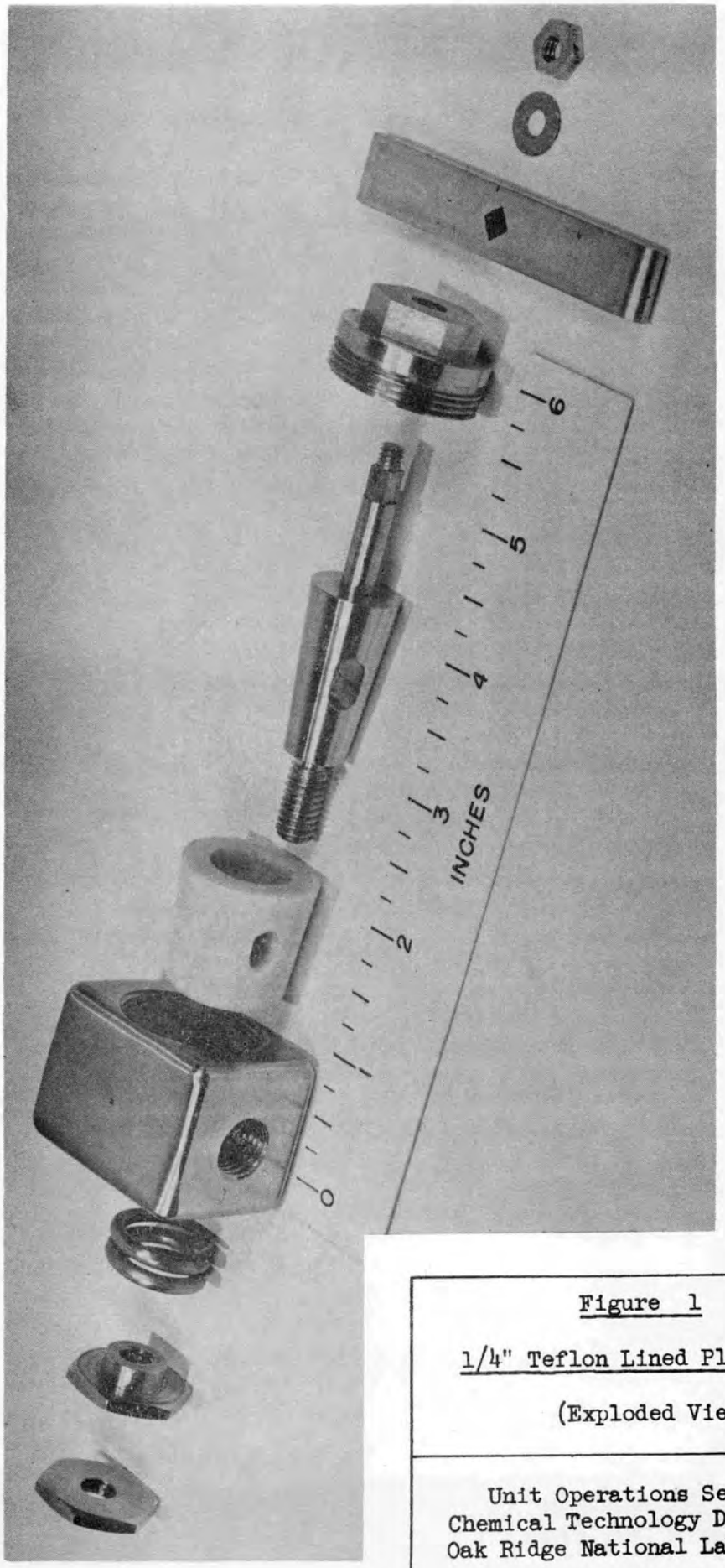

Figure 1

1/4" Teflon Lined Plug Valve

(Exploded View)

Unit Operations Section
Chemical Technology Division
Oak Ridge National Laboratory

[redacted]
#6473

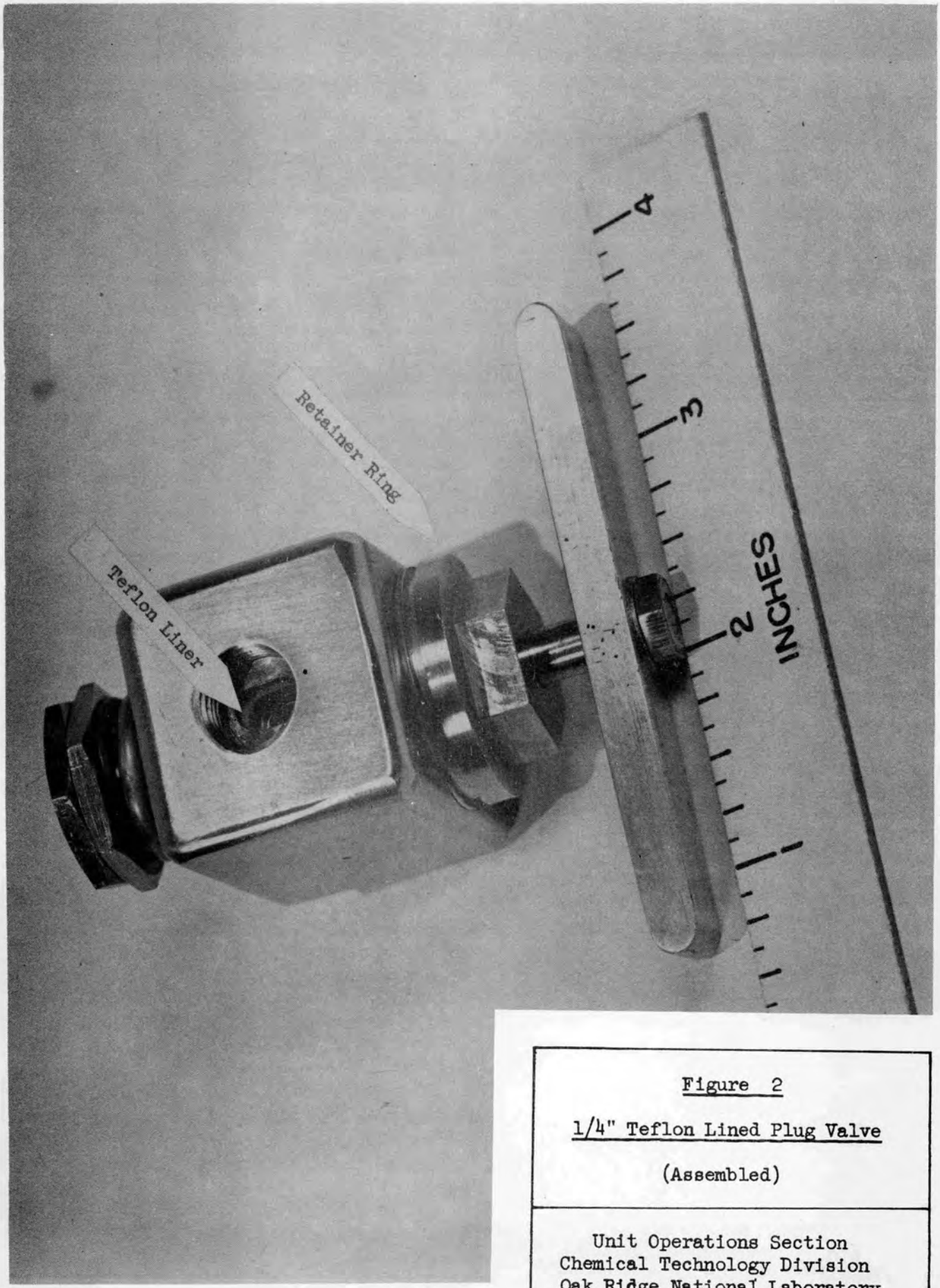

Figure 2

1/4" Teflon Lined Plug Valve

(Assembled)

Unit Operations Section
Chemical Technology Division
Oak Ridge National Laboratory

[redacted]

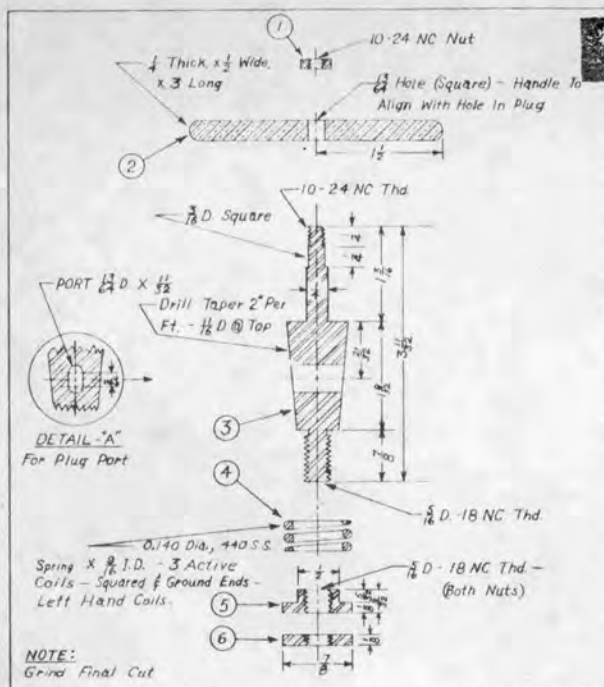

[redacted]

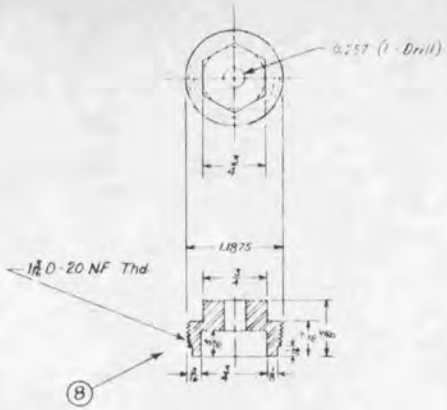

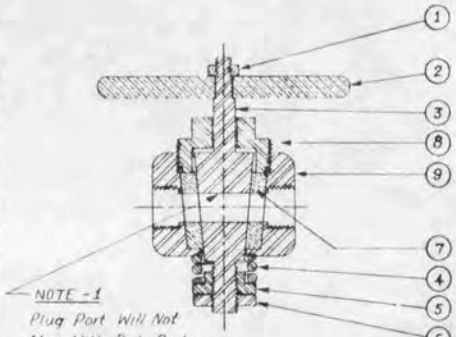

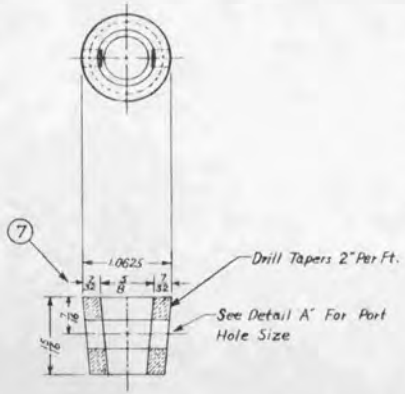

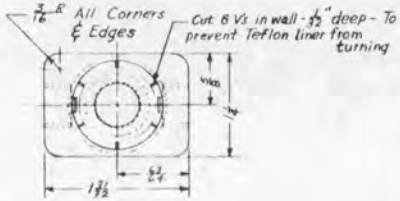

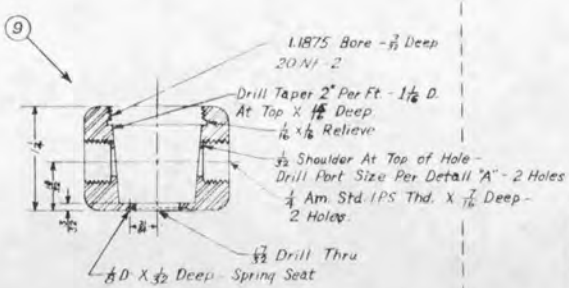

[redacted]

NO.	DESCRIPTION	MATERIAL
1	NUT, 10-24 NC	BRASS
2	HANDLE	BRASS
3	PLUG	347-S.S.
4	10 GA. SPRING	440-S.S.
5	NUT, 5/16 SPECIAL (HEX)	S.S.
6	NUT, 5/16 " (HEX)	S.S.
7	TEFLON SEAT	TEFLON (WHITE)
8	RETAINER - (HEX)	347-S.S.
9	VALVE BODY	347-S.S.

REV NO	REVISION	APPD	DATE

APPD	DATE

OAK RIDGE NATIONAL LABORATORY
TECHNICAL DIV. — P.O. BOX P — OAK RIDGE, TENN.

FIGURE 3

1/4" TEFLON LINED PLUG VALVE

(WORKING DRAWING)

DRAWN BY	DATE	SCALE FULL
GAW	12-1-48	DRAWING NO. TD-1274
CHECKED BY CDW	DATE 12/7/48	REV

12