[redacted]

MARTIN MARIETTA ENERGY SYSTEMS LIBRARIES
3 4456 0360477 6

ORNL-526

Chemistry-Separation Processes for Plutonium and Uranium

LABORATORY RECORDS
1954

PILOT PLANTS SECTION REPORT FOR OCTOBER AND NOVEMBER, 1949

OAK RIDGE NATIONAL LABORATORY
CENTRAL RESEARCH LIBRARY
CIRCULATION SECTION
4500N ROOM 175
LIBRARY LOAN COPY
DO NOT TRANSFER TO ANOTHER PERSON
If you wish someone else to see this report, send in name with report and the library will arrange a loan.
UCN-7969 (3 9-77)

OAK RIDGE NATIONAL LABORATORY
OPERATED BY
CARBIDE AND CARBON CHEMICALS DIVISION
UNION CARBIDE AND CARBON CORPORATION
UCC
POST OFFICE BOX P
OAK RIDGE, TENNESSEE

[redacted]

[redacted]

ORNL-526
Chemistry-Separation
Processes for Plutonium
and Uranium

CLASSIFICATION CHANGED TO: DECLASSIFIED
BY AUTHORITY OF: TID-1149
BY: [illegible] 7/10/57

This document consists 30 pages.
Copy 7 of 90. Series A.

Contract No. W-7405-eng-26

OAK RIDGE NATIONAL LABORATORY

TECHNICAL DIVISION

CHEMICAL TECHNOLOGY DEPARTMENT

PILOT PLANTS SECTION REPORT FOR OCTOBER AND NOVEMBER, 1949

D. G. Reid

DATE ISSUED

FEB 13 1950

OAK RIDGE NATIONAL LABORATORY

Operated by

CARBIDE AND CARBON CHEMICALS DIVISION
Union Carbide and Carbon Corporation
Post Office Box P
Oak Ridge, Tennessee

[redacted]

MARTIN MARIETTA ENERGY SYSTEMS LIBRARIES
3 4456 0360477 6

[redacted]

Table of Contents

	Page Number
0.0 Abstract	4
1.0 25 Pilot Plant Development	5
2.0 23 Pilot Plant Development	11
3.0 Redox Development Program	12
4.0 Waste Disposal Development	13
5.0 807 Operation and Patrol	14
6.0 General Administrative Information	14
Appendix I (25 Development)	15
Appendix II (23 Development)	23
Appendix III (Redox)	28
Appendix IV (Demineralization)	30

[redacted]

[redacted]

0.0 ABSTRACT

The Pilot Plant processing of 2400 grams of irradiated 93.5% enriched U^{235} has assured the success of the separations process for recovering and decontaminating the uranium from the Materials Testing Reactor discharged fuel assemblies. The seven individual runs were without operational incident, duplicated chemical conditions, equalled volumetric throughput, and had a fission product concentration of 20% of that of the proposed separations unit (1200 Area). The data showed that the unspent uranium fuel could be separated from the aluminum with an overall recovery of 99.9%, and sufficiently decontaminated from the fission products and transuranics in only two cycles of solvent extraction to permit subsequent laboratory purification and metallurgical fabrications to be performed with very little or no shielding.

The group for pilot planting the U^{233}-thorium separations is being formed, the equipment tested, and an experimental program evolved.

Conditions for recovering the plutonium separated during Redox pilot planting have been established and the recovery will be started during the next period by the 205 Pilot Plant group.

Participation in the radioactive liquid waste disposal development has been resumed.

The necessary preparations have been completed and the training of personnel has begun to permit transfer of the Water Demineralization Building operations to the Operating Division on January 1, 1950.

RESTRICTED DATA

This document contains restricted data as defined in the Atomic Energy Act of 1946..

CAUTION

This document contains information affecting the National Defense of the United States. Its transmission or the disclosure of its contents in any manner to an unauthorized person is prohibited and may result in severe criminal penalties under applicable laws.

"25" RECOVERY PILOT PLANT DEVELOPMENT

Technical - Rigstad, Rom, Harrington, Hylton, Landry, Stewart, Sadowski, (full time) Kennedy, Nicholson, Shank (part time)

Non-Technical - Benson, Burnett, Davis, Grizzell, Groover, Jennings, Land, Ledbetter, Lockmiller, McLellan, Sexton, Shields, Shipwash, Spangler, Thomas, Thompson, Wiggins

1.0 25 PILOT PLANT DEVELOPMENT

1.1 Summary

Seven 25 process verification runs have been completed using 2400 grams of irradiated 93.5% enriched uranium. This material as an aluminum alloy had been irradiated at Hanford from 94 to 152 days to give an activity level of approximately 20% of that expected of the Materials Testing Reactor discharge material. The flowsheet, the irradiation history of the material, and detailed data are given in Appendix I.

Total uranium loss from all four columns in the two cycles averaged 0.05%, while losses due to filtration were 0.15% and evaporation averaged 0.22%. With improved filter design and better developed crud removal techniques, the 0.15% filtration loss per run can be greatly reduced. The evaporation losses were a direct result of either the equipment or the high concentration factors and were eliminated by reprocessing the first evaporation condensate.

Gross decontamination factors of 2.6×10^6 beta and 1.5×10^6 gamma over the two cycles brought the residual activity to almost natural U^{235} beta and below gamma background with ruthenium the major fission product contaminant. The radiation readings taken on each 350 gram batch that had been concentrated to 2 molar UNH were less than one milliroentgen per hour at contact. The overall uranium balance for all processings was 101.2%.

Laboratory scale purification is being done on the second cycle product concentrate to remove small amounts of inert impurities and reduce the ruthenium activity.

1.2 First Cycle Feed Preparation

The first cycle operation was without incident. Criticality precautions necessitated that a "no heel" dissolving be employed. The procedure used was essentially the same as that discussed in the last Pilot Plants periodic report, ORNL-490. After dissolving, sufficient $Al(NO_3)_3$ solution and other reagents were added to adjust the feed solution to flowsheet

First Cycle Feed Preparation (Continued)

conditions. The feed was satisfactorily clarified by passing through a G porosity (10 micron) bare sintered stainless steel disc. Details of this operation are given in Appendix I.

1.3 First Cycle Data

Average decontamination and loss values for the seven first cycle processings were as follows:

A. Uranium Losses

Aqueous raffinate	0.02%
Organic raffinate	0.01%

B. Decontamination Factors

Gross β	1.1×10^4
Gross γ	7.0×10^3
Zr β	2.7×10^4
Cb β	1.1×10^4
Ce β	4.0×10^4
Ru β	3.6×10^2
Pu α	20.0

The column losses are about one-half process specifications.

The radioactivity present with the uranium after the first cycle of operation was low enough to allow personnel to remain in the vicinity of the processing equipment for 2-4 hours without receiving 100 mr radiation exposures.

Comparison of these data with previous runs made with natural uranium showed that elimination of ferrous sulfamate from the first cycle feed caused a drop of a factor of 10 in ruthenium and cerium decontamination which lowered the gross beta decontamination by a factor of two but caused no significant change in gamma decontamination. The plutonium decontamination was also reduced by a factor of 10^3 by the ommission of the ferrous sulfamate.

First Cycle Data (Continued)

A complete tabulation of the first cycle data is shown in Table II of Appendix I.

1.4 Second Cycle Feed Preparation and Data

The second cycle feed was prepared by the usual method of concentrating the first cycle product, addition of $Al(NO_3)_3$ salt solution, and necessary chemical adjustments.

Sufficient activity remained after the first cycle of operation to permit the determination of greater decontamination factors in the second cycle than was possible with the natural uranium used during process development. Ruthenium accounted for 50-90% of the beta activity remaining after the second cycle of operation and the use of ferrous sulfamate in only the second cycle resulted in a ruthenium decontamination factor about equal to that obtained in the first cycle. While these results are somewhat higher than seen in the past with normal uranium, the much higher specific ruthenium activity in the enriched runs lend more weight to the latter data. Use of ferrous sulfamate in the second cycle resulted in a plutonium DF which was at least five times greater than observed in the first cycle which brought the residual plutonium to background.

Column losses in the second cycle also were less than one half process specifications.

A summary of the second cycle data is presented here with a detailed tabulation in Table III in Appendix I.

A. Uranium Losses

Aqueous raffinate	0.01%
Organic raffinate	0.01%

B. Decontamination Factors

Gross β	2.6×10^2
Gross γ	2.3×10^2
Zr β	1.1×10^3
Cb β	3.8×10^3
Ce β	9.7×10^3
Ru β	3.1×10^2
Pu α	90

Second Cycle Feed Preparation and Data (Continued)

The product from the second cycle stripping column was evaporated continuously in the evaporator located in Cell III. The material from each run was reduced to a volume of 1 liter and transferred to the laboratory for purification.

1.5 Overall Data

Average results show overall column losses of 0.05%; filtration and evaporation losses amounted to 0.37% of which 0.15% was filtration and 0.22% evaporation losses. Improved equipment design and modified operational procedures permitted by better design would reduce the filtration loss. The evaporation loss was not a true loss to the system since condensates were re-evaporated and the uranium returned to process.

Overall gross beta and gross gamma decontamination factors of greater than 10^6 were consistently obtained. The necessary elimination of ferrous sulfamate from the first cycle due to incompatability with $Hg(NO_3)_2$ remaining from the dissolution of the alloy resulted in poorer first cycle plutonium and ruthenium decontamination as expected. Inclusion of ferrous sulfamate in the second cycle, however, compensated for the relatively poorer decontamination observed in the first cycle.

A resume of significant two cycle decontamination factors are given below with a more complete analysis of the feed and product streams for each batch given in Table IV and V in Appendix I.

Constituent	Decontamination Factors
Gross β	2.6×10^6
Gross γ	1.5×10^6
Zr β	2.7×10^7
Cb β	4.0×10^7
Ce β	3.8×10^8
Ru β	9.0×10^4
Pu α	1.8×10^3

An overall material balance of 101.2% was obtained for the ten two cycle runs (the last three being cleanout runs). This balance was based on the gravimetric analysis of the product and the amount of uranium used during alloy fabrication, corrected for fission.

1.6 Analytical Development

Standard analytical methods were used throughout the runs with uranium being determined by colorimetric and poloragraphic methods in the feed, fluorimetric in the raffinates, and colorimetric and gravimetric in the product streams. The other analyses such as specific gravity, radiochemical, etc. were by standard ORNL techniques. Some modifications of the analtyical techniques were necessary and certain pertinent information were determined as follows:

1. Filtration of dissolver samples and some first cycle feed preparation samples was required in the laboratory to remove interfering foreign material resulting from slug jacket dissolution. After the first cycle feed had been passed through the Pilot Plant sintered stainless steel filter, it was sufficiently clear so that all subsequent feed preparation samples were run directly.

2. A pulse analysis of a LaF_3 plate run for plutonium indicated approximately 10% Np^{237} associated with 80% Pu^{239} and 10% Pu^{238}. Since only a limited amount of work was done on this, no correction of the Pu analysis was made in calculating Pu decontamination factors.

3. No data on Np^{237} decontamination was available pending the development of an analytical method.

4. The background radioactivities of a sample of 93.5% enriched U^{235} were determined experimentally as follows:

Gross α	4.7×10^4 ct/m/mg U
Gross β	2.1×10^2 ct/m/mg U
Gross γ	1.7 mv/mg U
Pu α	50 cts/m/mg U

5. Several second cycle flowing stream products were counted for α, β and γ daily over a two week period and the following observations were made by R. W. Stoughten of the Chemistry Division:

   (a) An initial growth of β activity extending over the first week was due to the growth of the Th^{231} daughter of U^{235}.

   (b) The β decay noticed during the second week was due to decay of residual fission products remaining with the uranium after the Th^{231} had reached equilibrium.

   (c) The γ determination indicated a decay of about a 40 day half life probably due to Ru and Ce remaining with the product.

1.7 Miscellaneous

SF Accountability procedures for processing the enriched uranium were observed. All transfer valves were locked out during processing to avoid inadvertent loss, and all waste solutions were checked before disposal. Unused portions of samples containing uranium were returned for salvage of the enriched material.

Steam distillation of used hexone from a caustic heel was adequate to provide purified solvent which met specifications of less than 0.01% acidity (as HAc), less than 0.01 N reducing power, and color less than 2 ppm as $K_2Cr_2O_7$.

An experiment to determine the "per cent limit of error" in the determination of the dissolver uranium content was done by the K-25 Statistical Section. A "per cent limit of error" of 7.6% was determined for a 95% confidence band which included analytical and volume determination errors and sampling variation.

1.8 Program

The 25 aluminum alloy processing essentially completes the 25 process development program. A summary report will be prepared within the next three months summarizing all pertinent process information.

The 1.5 M UNH final product will be further purified by a laboratory batch solvent extraction process using diisopropyl ether as solvent and $Al(NO_3)_3$ as salting agent to reduce chemical impurities and fission product activity.

"23" PILOT PLANT DEVELOPMENT

Technical - Jackson, Klotzbach, (full time) Ferguson, Lewis, Nicholson, (part time)

Non-Technical - Gifford, Jones, Summers

2.0 23 PILOT PLANT DEVELOPMENT

2.1 Summary

The past period has been spent cleansing, testing, calibrating, and modifying the equipment of the 23 Pilot Plant in preparation for the shake-down inactive runs to be followed by the processing of Hanford irradiated Th metal.

2.2 Progress

Construction of the 23 Pilot Plant was completed during October, 1949, and the effort of the 23 Pilot Plant Group since that time has been devoted to cleanout, testing, calibration, and minor modification of the equipment shown in flowsheet form in Figure II, Appendix II. A memo, C.F. #49-11-328, **Orientation Manual for the 23 Pilot Plant**, has been issued which summarizes briefly the chemistry of the 23 process, and which describes in detail the 23 Pilot Plant equipment. This memo will be issued as formal report ORNL-564 in about one month. Two cold runs have been completed, and from the results of these runs it was concluded that the equipment will be ready for continuous operation by December 5, 1949, at which time the 23 Pilot Plant will begin equipment shakedown tests on a 24 hour basis processing unirradiated thorium metal.

2.3 Program

The 23 program will consist of six cold shake-down runs to be made during December, 1949 and about twenty radioactive runs to be made during the first three to four months of 1950. The experimental program together with the initial chemical flowsheet and equipment flowsheet are given in Appendix II.

REDOX PILOT PLANT DEVELOPMENT

Technical - Rigstad

3.0 REDOX DEVELOPMENT PROGRAM

3.1 Progress

The summary report of the ORNL Pilot Plant Investigation of the Redox Process, ORNL-463, by H. K. Jackson and G. S. Sadowski, was issued for distribution on November 1, 1949.

In accordance to request RS-M-500, 510.8 pounds of uranium metal recovered from the 100% Hanford level Redox runs (1EU Concentrate) was transferred to the SF Materials Accountability Office on 10-19-49 as a 2 M UNH solution. This material will be shipped to Mallinkrodt on receipt of official request.

3.2 Re-processing of Redox IBP Solutions

The program has been formulated to start approximately December 10 for recovering, purifying, and concentrating the Pu separated as the 1BP solution during Redox processing. This material was stored in the Pilot Plant building for recovery after completion of the 25 program. The specifications of the solutions together with the chemical conditions to be used, as developed by the Laboratory Section, are given in Appendix III.

WASTE DISPOSAL DEVELOPMENT

Technical - Shank (part time)

4.0 WASTE DISPOSAL

4.1 Progress

Operation of the Tank Farm Evaporator by the Operations Division is continuing with the prime emphasis on reducing the backlog waste volume while processing current waste. Foaming continues to be the major operating difficulty. A 0.7 gpm water spray foam breaker and periodic addition of anti-foam agent 'Dow-Corning A' has materially helped the situation.

Preliminary Semi-Works investigation and tentative design specifications for two parallel sets of evaporator condensate resin columns have been completed. Proposals for bids on the installation are expected to be sent to various demineralizing equipment manufacturers by December 18, 1949.

4.2 Program

During the next six to eight weeks, the evaporator equipment and operation will be observed and data coordinated in order to determine modifications to increase the overall efficiency. Radiochemical analysis will be made on the routine samples from the runs during the next two weeks. Concurrently, the Laboratory Section will begin investigation of anti-foam agents.

807 OPERATION AND PATROL

Non-Technical - Purkey, Beeler, Caldwell, Strader

5.0 807 OPERATION AND PATROL

Patrol work has been without incident this past period.

The necessary preparation for transfer of the 807 Bldg. from the Pilot Plant Section to the Operations Division is proceeding smoothly and includes:

1. Issuance of the Operating Manual on November 25, 1949, C.F. #49-10-238.

2. General overhaul of the building including painting and final minor adjustments to recent instrument installations.

3. Preparation for training of the Operations Division personnel.

A slight change in the mode of operation due to the reduced requirements for high purity water has changed the regeneration operation from an estimated volume procedure to the chemical control method. This will increase the capacity of the resin beds approximately 50% and may increase the overall building efficiency 10%. Some minor cleaning of the deaerator equipment such as the heat exchanger, etc. was necessary during the past period.

The operating summary is given in Appendix IV.

6.0 GENERAL ADMINISTRATIVE INFORMATION

The 205 Bldg. permanentization plans have been reviewed and approved with only minor changes. It is expected that construction will start approximately January 1, 1950.

K. K. Kennedy, Badge No. 4253, Chemist, terminated 11/10/49 to accept employment at HEW.

N. L. Beeler, Badge No. 3943, Research Operator "B", was transferred to the Maintenance Department November 28, 1949.

[redacted]

APPENDIX I

25 PILOT PLANT DEVELOPMENT DETAILED DATA

FEED MATERIAL HISTORY AND PROCESS CONDITIONS

Given in Table I are the data pertaining to the irradiation and decay history of the U_{235} aluminum alloy used during the "25" verification runs. Figure I gives the chemical flowsheet used. The equipment flowsheet for the 25 Pilot Plant is given on page 20 of the last Pilot Plants Report, ORNL-490.

TABLE I

ORNL Technical Division - 25 Pilot Plant

U_{235}/Al Alloy Irradiation Data

Run	Wt. of U grams		Discharge Date	Irrad. flux-nvt	
	Before Irrad.	After Irrad.		Max.	Ave.
1	356.034	345.23	11/16/48	6.2×10^{19}	5.9×10^{19}
2	355.496	344.70	11/16/48	6.2×10^{19}	5.9×10^{19}
3	352.446	341.76	11/16/48	6.2×10^{19}	5.9×10^{19}
4	22.583 237.583 86.834	21.89 226.09 82.09	11/16/48 1/21/49 2/21/49	6.2×10^{19} 9.8×10^{19} 1.1×10^{20}	5.9×10^{19} 9.4×10^{19} 1.05×10^{20}
5	348.616	329.57	2/21/49	1.1×10^{20}	1.05×10^{20}
6	347.588	328.60	2/21/49	1.1×10^{20}	1.05×10^{20}
7	352.796	333.43	2/21/49	1.1×10^{20}	1.05×10^{20}

[redacted]

[redacted]

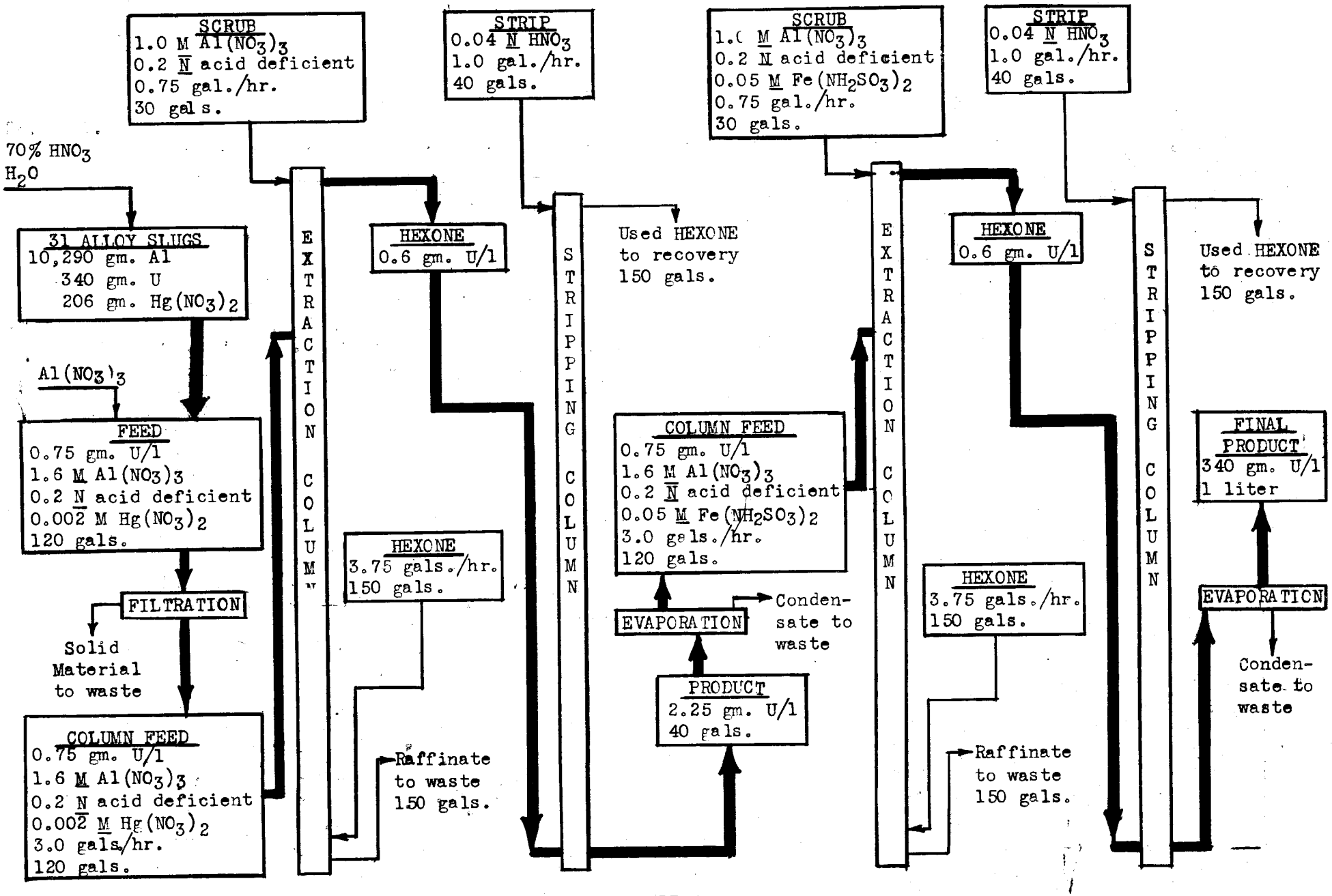

FIGURE I

"25" PILOT PLANT FLOWSHEET FOR ENRICHED MATERIAL

11-15-49

[redacted]

FIRST CYCLE FEED PREPARATION

A. Dissolution of Alloy

The dissolution was performed by adding 31 aluminum jacketed, alloy slugs containing approximately 10.3 Kg. of aluminum and 350 gms. of uranium (93.5% U^{235}) to the dissolver containing 206 gms. of $Hg(NO_3)_2$ in 32.5 gallons of water. 24.1 gallons of 70% HNO_3 were added continuously over a 14 hour period at a rate of 10% per hour for the first six hours and 5% per hour for the next 8 hours controlling the temperature at 100-103° C. A sample of the dissolver solution after 10 hours of digestion at 102-105° C and before transfer to the feed make-up tank showed 90-95% of the alloy in solution. To dissolve the remaining 5-10% of the alloy, a "clean-up" dissolving was made employing 5-10% of the starting chemicals and a 12 hour digestion time. This procedure dissolved essentially 100% of the alloy added to the dissolver, yielding approximately 70 gallons of solution 1.4 M $Al(NO_3)_3$, .003 M $Hg(NO_3)_2$, 0.7 to 1 N HNO_3, and 1.3 gms. U/l.

B. Feed Filtration

The first cycle column feed was prepared by mixing the dissolver solution, $Al(NO_3)_3$ solution, and the necessary chemical adjusting reagents. This solution was then clarified by passing through a sintered stainless steel filter disc. The clarification was necessary because of approximately 50 grams per batch of silicious material present as jacket to slug bonding material. The filtration was done with a porosity G, flat disc element to reduce filtration heels. The filtration rates were slow and required periodic back sparging of the filter element with air. The average time for filtration of a 120 gallon batch of feed was 16 hours and the same filter cleansing procedure using a NaOH solution was satisfactory. A single element was used for the entire processing and only a slight increase in permanent plugging was noted.

[redacted]

TABLE II

ORNL Technical Division - 25 Pilot Plant

First Cycle Decontamination Factors and
Loss Data Using Enriched U/Al Alloy

Run	Gross β x 10^3	Gross γ x 10^3	Ru β x 10^2	Zr β x 10^4	Cb β x 10^4	Ce β x 10^4	Pu α	Filtration Loss %	Extraction Loss %	Strip Loss %
1YI	12.0	8.8	0.5	3.9	1.6	3.9	8.3	.28	.02	.02
2YI	7.7	4.7	2.3	1.6	.8	3.3	8.6	.01	.03	.01
3YI	8.4	5.5	2.9	2.6	1.0	3.0	18.	.12	.03	.01
4YI	13.0	9.4	7.8	2.3	1.1	2.7	22.	.24	.04	.02
5YI	17.0	8.4	4.4	3.3	1.0	4.8	25.	.17	.01	.01
6YI	7.3	5.5	2.5	3.0	1.4	6.4	24.	.07	.02	.01
7YI	9.9	6.9	4.8	1.9	1.1	3.9	33.	.13	.01	.01

[redacted]

[redacted]

TABLE III

ORNL Technical Division - 25 Pilot Plant

Second Cycle Decontamination Factors and
Loss Data Using Enriched U/Al Alloy

Run	Gross β x 10^2	Gross γ x 10^2	Ru β x 10^2	Zr β x 10^3	Cb β x 10^3	Ce β x 10^3	Pu α x 10^2	Feed Boil* Down Loss %	Extra. Loss %	Strip Loss %	Prod. Evap. Loss %*
1YII	2.0	1.4	2.8	.7	.9	9.5	1.5	.02	.01	.01	.46
2YII	4.7	2.9	5.6	.9	4.7	12.0	.4	.05	.01	.01	.19
3YII	2.9	2.4	5.8	.4	5.3	8.7	2.1	.05	.01	.01	.15
4YII	2.0	1.9	1.3	1.1	7.3	11.0	.8	.04	.01	.01	.21
5YII	1.8	2.1	1.7	1.5	1.8	8.9	.7	.08	.01	.01	.11
6YII	3.1	3.7	3.8	1.1	1.6	6.8	.5	.05	.01	.01	.12
7YII	1.5	1.6	1.0	1.8	5.1	11.0	.3	.01	.01	.01	.06

* Recovered by re-evaporation and added to process.

[redacted]

TABLE IV

ORNL Technical Division - 25 Pilot Plant

Two Cycle Decontamination and
Column Losses of U^{235} Processings

Run	Gross β x 10^6	Gross γ x 10^6	Ru β x 10^4	Zr β x 10^7	Cb β x 10^7	Ce β x 10^8	Pu α* x 10^3	Losses
1	2.4	1.2	1.4	2.7	1.4	3.7	1.2	.06
2	3.6	1.4	13.	1.4	3.8	4.0	.3	.06
3	2.4	1.3	17	1.0	5.3	2.6	3.8	.06
4	2.6	1.8	10	2.5	7.1	3.0	1.8	.08
5	3.1	1.7	5.7	4.9	1.8	4.3	1.7	.04
6	2.2	2.0	8.5	3.3	2.2	4.3	1.2	.05
7	1.5	1.1	4.8	3.4	5.6	4.3	1.0	.04

* Pu alphas essentially at background.

[redacted]

TABLE V

ORNL Technical Division - 25 Pilot Plant

Activity Spectrum of Feed and Product of U^{235} Processings

Run	Constituent	First Cycle Feed		Second Cycle Product	
		cts/min/mg U	%	cts/min/mg U	%
1Y	Gross β	5.5×10^8	100	199	100
	Gross γ (mv)	2.5×10^5	100	0.2	100
	Zr β	2.7×10^7	5	1.0	0.5
	Cb β	2.0×10^6	0.4	0.1	0.07
	Ce β	3.4×10^8	62	0.9	0.5
	Ru β	1.5×10^6	0.3	114	57
	Pu α	1.4×10^4	---	11.6	---
2Y	Gross β	7.1×10^8	100	197	100
	Gross γ (mv)	2.7×10^5	100	0.2	100
	Zr β	2.7×10^7	4	1.8	0.9
	Cb β	2.1×10^6	0.3	0.05	0.003
	Ce β	4.3×10^8	61	1.1	0.5
	Ru β	1.6×10^7	2	120	60
	Pu α	1.1×10^4	---	35.1	---
3Y	Gross β	5.4×10^8	100	168	100
	Gross γ (mv)	2.3×10^5	100	0.2	100
	Zr β	1.9×10^7	3	1.8	11
	Cb β	1.9×10^6	0.4	.04	.02
	Ce β	3.9×10^8	74	1.5	0.9
	Ru β	1.4×10^7	3	78	47
	Pu α	7.5×10^3	---	2.0	---
4Y	Gross β	9.5×10^8	100	371	100
	Gross γ (mv)	6.2×10^5	100	0.4	100
	Zr β	6.2×10^7	6	2.5	0.7
	Cb β	7.8×10^6	0.8	0.1	0.03
	Ce β	7.2×10^8	76	2.3	0.6
	Ru β	2.8×10^7	3	280	76
	Pu α	1.1×10^4	---	6.0	---

[redacted]

[redacted]

Table V (Continued)

Run	Constituent	First Cycle Feed		Second Cycle Product	
		cts/min/mg U	%	cts/min/mg U	%
5Y	Gross β	1.1×10^9	100	530	100
	Gross γ (mv)	7.4×10^5	100	0.4	100
	Zr β	7.5×10^7	7	1.5	0.3
	Cb β	5.6×10^6	0.5	0.3	0.06
	Ce β	7.2×10^8	66	1.7	0.3
	Ru β	3.1×10^7	3	420	79
	Pu α	1.2×10^4	---	6.9	---
6Y	Gross β	1.1×10^9	100	402	100
	Gross γ (mv)	6.9×10^5	100	0.3	100
	Zr β	6.4×10^7	6	1.9	0.5
	Cb β	6.9×10^6	0.6	0.3	0.08
	Ce β	7.6×10^8	71	1.8	0.4
	Ru β	2.8×10^7	3	300	74
	Pu α	1.2×10^4	---	10.4	---
7Y	Gross β	1.1×10^9	100	703	100
	Gross γ (mv)	6.4×10^5	100	0.6	100
	Zr β	7.2×10^7	7	2.1	0.3
	Cb β	9.4×10^6	0.8	0.2	0.02
	Ce β	7.5×10^8	68	1.7	0.2
	Ru β	3.0×10^7	3	630	89
	Pu α	1.1×10^4	---	9.6	---

Unirradiated 93.3% U^{235}:

Gross α	4.7×10^4 ct/m/mg U
Gross β	2.1×10^2 ct/m/mg U
Gross γ	1.7 mv/mg U
Pu α	~50 ct/m/mg U

[redacted]

APPENDIX II

23 PILOT PLANT PROGRAM AND OBJECTIVES

CHEMICAL OBJECTIVES

A. Cold Runs

Six cold runs will be made during December to test the equipment and operating procedures. During this time an investigation of the important dissolving variables (initial nitric acid concentration and final specific gravity of dissolver solution) will be initiated; this study will probably continue through most of the hot runs.

B. Hot Runs

The tentative objectives and flowsheet conditions for the hot runs are as follows:

Runs 1,2 - Preliminary evaluation of 23 flowsheet for loss and decontamination factors at low activity.

Runs 3,4 - Continue evaluation of 23 flowsheet, particularly with respect to Pa decontamination using four "green" Th slugs from the ORNL pile as a source of Pa.

Runs 5,6 - Determine the effect of extraction temperatures of 10, 20 and 30° C.

Runs 7,8,9 - Determine the effect of varying the Th concentration from 1.4 to 2.0 M.

Runs 10,11 - Determine effect of varying acidity of feed and scrub from 0.4 N acid deficient to neutral.

Run 12 - Determine effect of addition of gross amounts of common hexone impurities to the solvent.

Run 13 - Determine effect of varying the flowrate from 50 to 400% of normal.

Run 14 - Determine the effect of varying the hexone flow ratio by 20% from the normal values.

Run 15 - Determine the effect of temperature on decontamination and losses at high activity.

Run 16-20 - Reserved for additional special studies, or for additional demonstration at highest possible activity.

ENGINEERING OBJECTIVES

The general features of 23 Pilot Plant are similar to those of the ORNL solvent extraction pilot plant used for the Redox and 25 process investigation. During those programs most of the types of equipment to be used in the 23 Pilot Plant investigation were demonstrated to be adequate. Certain features of the 23 Pilot Plant, however, have not been tested and demonstrated at Pilot Plant level. The more important of these items which will be investigated in the 23 Pilot Plant are as follows:

1. Direct Pumping of Hot Feed

   Feed will be pumped to the extraction column directly (not by displacement) by means of a bellows pump. The pumping element consists of a bellows which is flexed by a cam driven rocker arm.

2. Thermal-Electric Flowmeter

   The feed flowrate to the extraction column will be determined by means of a thermal-electric flowmeter. The principal of operation is that the temperature of the feed is raised a fixed number of degrees, regardless of flowrate or initial temperature, and the heat required to effect the temperature rise is measured by means of a wattmeter. The wattmeter reading is a function of flowrate.

3. Process Tubing

   Most of the process lines in the cells are constructed of tubing rather than pipe. Seamless, Type 304, stainless steel tube is used in most cases. All tube fittings are stainless steel Parker Triple Tube couplings, Aircraft 811 type.

MISCELLANEOUS DATA ON RADIOACTIVE 23 PROCESSINGS

Listed below are some of the more important data and decisions concerning the 23 Pilot Plant runs.

1. Total available irradiated thorium -- 740 Kg (670 slugs)
2. No non-irradiated thorium to be used to increase total number of runs
3. Total thorium to be used per run -- 37 kg
4. Total runs -- 20
5. Dissolvings per run -- 2
6. Slugs per dissolving -- 17
7. Normal length of runs -- 40 hours
8. Volume of feed -- 26 gallons
9. Scrub volume changes in column -- 6 per run
10. Feed volume changes in column -- 15 per run
11. Strip volume changes in column -- 6 per run
12. Per cent flooding -- 15%
13. Slug history - Early runs, 90 day Hanford irradiation, about 24 months cooling; later runs, 100 day Hanford irradiated, 10 months cooling.
14. Total amount of 23 to be recovered -- 280 grams

[redacted]

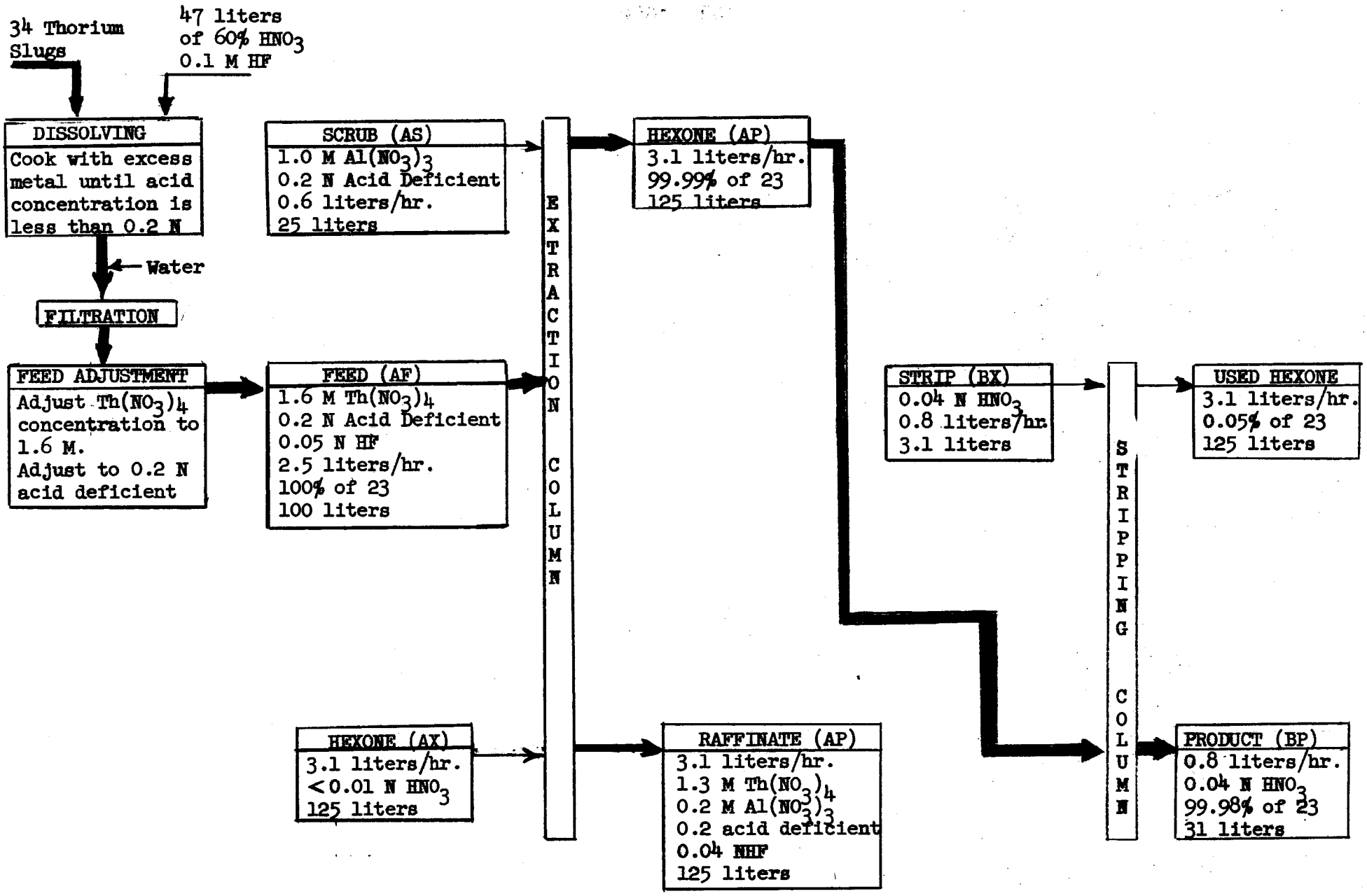

FIGURE II

23 PILOT PLANT CHEMICAL FLOWSHEET

11-15-49

[redacted]

Fig. 3

[redacted]

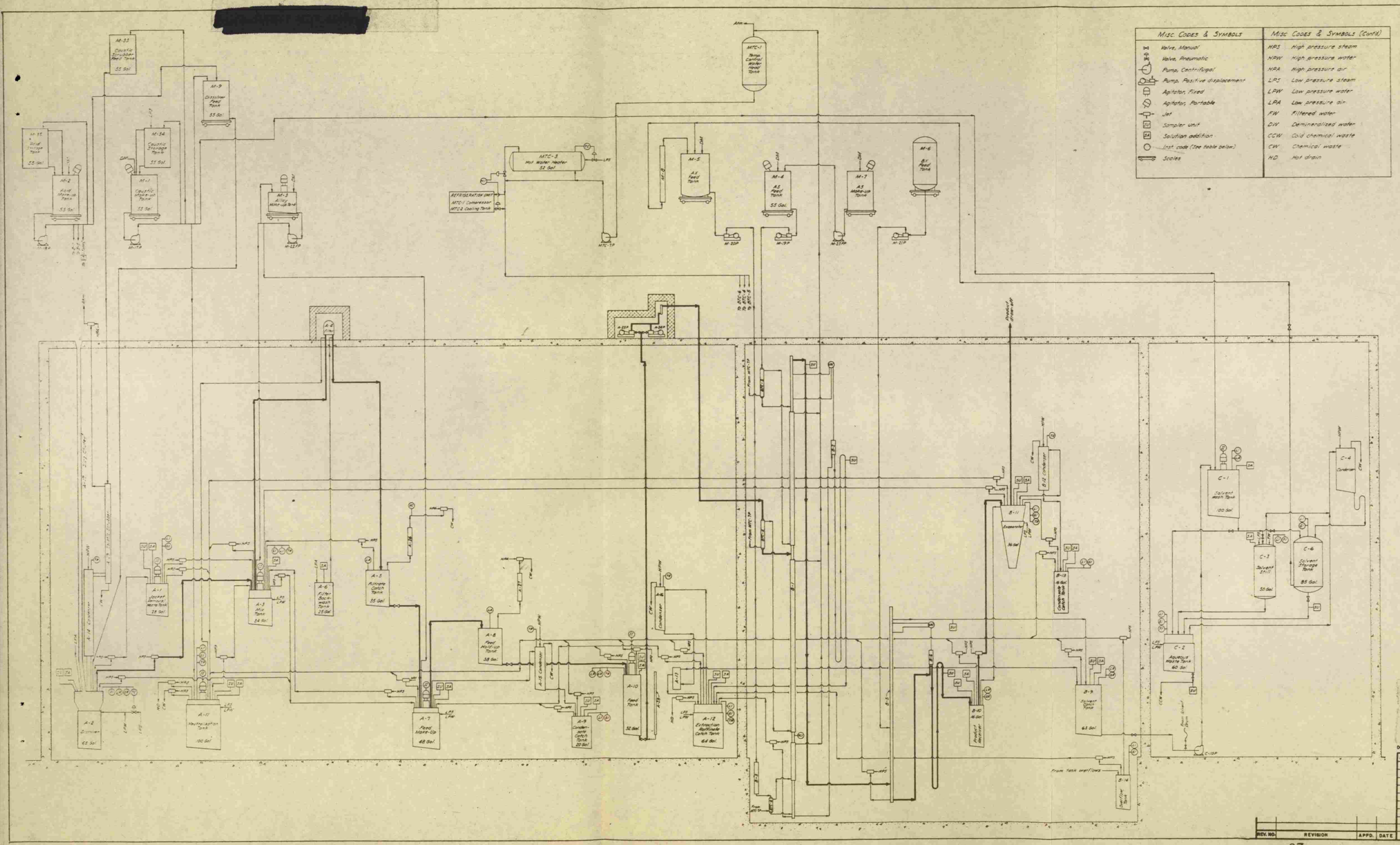

Misc. Codes & Symbols	
	Valve, Manual
	Valve, Pneumatic
	Pump, Centrifugal
	Pump, Positive displacement
	Agitator, Fixed
	Agitator, Portable
	Jet
SU	Sampler unit
SA	Solution addition
	Inst. code (See table below)
	Scales

Misc. Codes & Symbols (Cont'd)	
HPS	High pressure steam
HPW	High pressure water
HPA	High pressure air
LPS	Low pressure steam
LPW	Low pressure water
LPA	Low pressure air
FW	Filtered water
DW	Demineralized water
CCW	Cold chemical waste
CW	Chemical waste
HD	Hot drain

Equipment Code	
Equip. No.	Equip. Name
A-13	Separator
A-16	Condenser
A-26	Vacuum spray trap
A-27	Vacuum spray trap
B-1	Extraction column
B-2	AR Jackleg pressure pot
B-3	AX Accumulator
B-5	Stripping column
B-6	BP Jackleg pressure pot
B-14	Overflow tank
BTC-4	AF Heat exchanger
BTC-5	AS Heat exchanger
BTC-6	AX Heat exchanger
M-8	AX Prescrubber

Instrumentation Code						
	Symbol	Indicator-I	Recorder-R	Controller-C	Indicating Controller-IC	Recording Controller-RC
Flow rate	F	FI	FR	FC	FIC	FRC
Specific gravity	G	GI	GR	GC	GIC	GRC
Liquid level	L	LI	LR	LC	LIC	LRC
Pressure	P	PI	PR	PC	PIC	PRC
Temperature	T	TI	TR	TC	TIC	TRC
Current	I	II	IR	IC	IIC	IRC

A added to any symbol indicates an alarm

GENERAL NOTES:

1.- Tank and column vent lines are not indicated

2.- All jet discharge lines indicated as common lines are actually individual

[redacted]

DO NOT SCALE THIS DRAWING.

APPD.	DATE	OAK RIDGE NATIONAL LABORATORY
		TECHNICAL DIV. — P.O. BOX P — OAK RIDGE, TENN.
		BLDG. 706-HB
		1300 PRODUCT PILOT PLANT
		DETAILED SCHEMATIC EQUIPMENT FLOWSHEET
		DRAWN BY [illegible] DATE 10-31-49 SCALE NONE
		CHECKED BY DATE DRAWING NO. TD-1369 REV.

REV. NO.	REVISION	APPD.	DATE

APPENDIX III

HANFORD PLUTONIUM RECOVERY

HEW SPECIFICATIONS

The following specifications have been stated as being desired by the Hanford Engineering Works for all plutonium being returned to them.

TABLE VI

ORNL Technical Division - Redox Pilot Plant

HEW Plutonium Interprocess Specifications

Component	Specification
Plutonium	10 gms. Pu/liter
Iron	5.0% (of total plutonium)
Aluminum	0.5% (of total plutonium)
Chromium	0.2% (of total plutonium)
Uranium	40-50 mg/gm Pu
Gamma Activity	10^7 d/m/gm Pu
Beta Activity	10^8 d/m/gm Pu
Hexone	None

The material separated during the Redox development work has the following analysis.

TABLE VII

ORNL Technical Division - Redox Pilot Plant

Composition of the Stored 1BP Solution

Component	Tank E2	Tank F2
Source	ANL-ORNL Flowsheet	ORNL Flowsheet
Specific Gravity	1.178	1.160
Aluminum nitrate	1.2 M	1.0 M
Oxidizing Molarity	0.1 M	0.08 M ($Cr_2O_7^=$)
Nitric Acid	0.13 M	0.23 M
Plutonium	3.9×10^6 α/m/ml	6.4×10^6 α/m/ml
Total β	2.2×10^7 c/m/ml	7.0×10^5 c/m/ml
Total γ	4.3×10^4 c/m/ml	2.5×10^3 c/m/ml
Volume	1100 gallons	350 gallons
U (Mg/ml)	4.1	0.048

[redacted]

Tests by the Laboratory Section have established conditions under which the above material may be processed with a minimum of adjustment of the feed solution. A uranium-plutonium partition cycle has been included to decontaminate the product with respect to uranium.

Since a difference in uranium concentration, activity level, and plutonium extractability exists between the solutions in the two storage tanks, individual processes have been recommended as follows:

TABLE VIII

ORNL Technical Division - Redox Pilot Plant

Proposed Flowsheets for Pilot Plant Redox Plutonium Recovery

Source	E2 Solution	F2 Solution
1AF (1 Vol.)	1.2 M $Al(NO_3)_3$ 0.1 M $Na_2Cr_2O_7$ 0.3 N HNO_3	1.0 M $Al(NO_3)_3$ 0.08 M $Na_2Cr_2O_7$ 0.23 M HNO_3
1AS (1 Vol.)	1.3 M $Al(NO_3)_3$ 0.3 N HNO_3	1.3 M $Al(NO_3)_3$ 0.3 M HNO_3
1AX (2 Vol.)	(MIBC free) (0.3 N HNO_3)	(MIBC free) (0.0 N HNO_3)
1BX (0.2 Vol.)	0.9 M $Al(NO_3)_3$ 0.05 M Fe^{++} Sulf.	0.9 M $Al(NO_3)_3$ 0.05 M Fe^{++} Sulf.
1BS (1 Vol.)	(MIBC free) 0.05 N HNO_3	(MIBC free) 0.05 N HNO_3
1CX (0.3 Vol.)	0.1 M HNO_3	0.1 M HNO_3

The IBP from the first cycle will then be prepared for a plutonium cycle consisting of an extraction under oxidizing conditions to be followed by a stripping step and evaporation to a volume of 4-5 liters. If necessary a laboratory purification step will be incorporated to give the required additional decontamination.

[redacted]

APPENDIX IV

DEMINERALIZED WATER BUILDING

Operating Summary 10/1/49 - 11/29/49

Total filtered water to Bldg.		1,851.700 gallons
Demineralized water to		
Bldg. 105		920,610 gallons
Bldg. 205		80,640 gallons
MTR Mock-Up		200,460 gallons
Bldg. 807 & 101		24,630 gallons
	TOTAL	1,226,340 gallons
Operating Efficiency		66%
Ave. pH (deaerated)		5.7
Ave. Resistance (deaerated)		305,000 ohms.

[redacted]