[redacted]

MARTIN MARIETTA ENERGY SYSTEMS LIBRARIES
3 4456 0360502 5

ORNL 675
Chemistry-Separation Processes
for Plutonium and Uranium

LABORATORY RECORDS
1954

PILOT PLANTS SECTION
REPORT FOR MARCH, 1950

OAK RIDGE NATIONAL LABORATORY
CENTRAL RESEARCH LIBRARY
CIRCULATION SECTION
4500N ROOM 175
LIBRARY LOAN COPY
DO NOT TRANSFER TO ANOTHER PERSON
If you wish someone else to see this report, send in name with report and the library will arrange a loan.
UCN-7969 (3 9-77)

OAK RIDGE NATIONAL LABORATORY
OPERATED BY
CARBIDE AND CARBON CHEMICALS DIVISION
UNION CARBIDE AND CARBON CORPORATION
UCC
POST OFFICE BOX P
OAK RIDGE, TENNESSEE

[redacted]

[redacted]

ORNL-675*
Chemistry-Separation
Processes for Plutonium
and Uranium

This document consists of
32 pages. Copy 7 of 92 .
Series A.

Contract No. W-7405-eng-26

CHEMICAL TECHNOLOGY DIVISION

PILOT PLANTS SECTION REPORT FOR MARCH, 1950

D. G. Reid

DATE ISSUED

MAY 26 1950

DECLASSIFIED

CLASSIFICATION CHANGED TO:
BY AUTHORITY OF: TID-1149
BY: P. Morrison 7/10/57

OAK RIDGE NATIONAL LABORATORY

operated by

CARBIDE AND CARBON CHEMICALS DIVISION

Union Carbide and Carbon Corporation

Post Office Box P

Oak Ridge, Tennessee

*Previously issued as CF 50-4-117

[redacted]

[redacted]

MARTIN MARIETTA ENERGY SYSTEMS LIBRARIES

3 4456 0360502 5

[redacted]

TABLE OF CONTENTS

		Page Number
0.0	Abstract	4
1.0	23 Process Development	5
2.0	Plutonium Recovery	13
3.0	Chalk River Separation	15
4.0	Radiochemical Waste Processing Development	18
5.0	ORNL Metal Recovery Plant	20
6.0	25 Recovery	22
7.0	Miscellaneous Administrative	23
Appendix I (23 Process Development)		24
Appendix II (Chalk River Separation)		29

[redacted]

[redacted]

[redacted]

[redacted]

0.0 ABSTRACT

The monthly report for the Pilot Plants Section of the ORNL Chemical Technology Division for the month of March is presented.

[redacted]

[redacted]

"23" PILOT PLANT DEVELOPMENT

Technical - Jackson, Ferguson, Hylton, Lewis, Nicholson

Operators - Caldwell, Davis, Grizzell, Jones, Lockmiller, Purkey, Shipwash, Spangler, Summers, Thomas, Thompson

1.0 23 PROCESS DEVELOPMENT

Six U^{233}-Th separation runs (13T-18T) processing Hanford irradiated thorium were made during March. The results of twelve previous runs had demonstrated that the one-cycle solvent extraction process yields a fission product decontamination factor of 2×10^4, with a 23 loss of less than 0.2%. The most significant results of Runs 13T-18T were as follows:

1. Gross decontamination decreased to 1×10^3 when the metal feed acidity was increased from 0.2 N acid deficient to 0.05 N acid deficient; decontamination did not increase above 2×10^4 when the metal feed acidity was decreased from 0.2 N acid deficient to 0.3 N acid deficient.
2. Decontamination was not affected when untreated solvent, methyl isobutyl ketone (MIBK), was adjusted to 0.5% in methyl isobutyl carbinol.
3. Except for the inextractable 23 loss (0.04%), no extraction loss could be detected when only 9.5 ft. of extraction section was used at 50% of flooding. A 23 loss of 0.05% (excluding inextractable 23) was observed using the same extraction length at 15% of flooding.
4. The 23 loss in the jacket removal solution (due to residual 23 in the dissolver after transfer of the dissolver solution to the mix tank) was reduced to about 0.03% by an improved dissolver wash procedure. This reduced the total 23 loss for the complete cycle to 0.10%.

23 Process Development (Continued)

The 23 Pilot Plant program is essentially complete. One additional run using an alternate solvent, diisopropyl ether, will be made, and about three cleanup runs will be required to recover 23 held up in the system and to decontaminate the equipment. It is estimated that 300 grams of 97% isotopically pure U^{233} will have been recovered by the end of the program.

1.1 Feed Preparation

The general features of feed makeup are similar to feed makeup for the Redox process. Aluminum jackets were removed by the standard 10% NaOH - 20% $NaNO_3$ procedure, and dissolver solutions about 0.2 N acid deficient were produced by using 65% nitric acid - 0.1 N $(F)^-$ and dissolving to a specific gravity of 2.09. The metal used for Runs 13T through 16T was cooled 18 months and the metal dissolved for 17T and 18T was cooled 13 months. As the cooling time required for negligible 23 loss is about eleven months, this 13 months cooled metal represents near full activity level.

About 0.1% of the total 23 was lost on the first ten runs with the jacket removal solution. Most of this 23 loss was due to insufficient washing of the dissolver after transfer of the dissolver solution to the mix tank. A revised washing procedure consisting of four 15 liter water washes was used on Runs 11T - 18T. This procedure decreased the 23 loss to about 0.03% (see Table I-1, Appendix I).

23 Process Development (Continued)

1.2 Column Operation

The objectives of runs made during March are given in Appendix, and a summary of loss data for Runs 1T-18T and decontamination data for Runs 12T-18T is given in Appendix, Tables I-1, I-2 and I-3. The following conclusions are drawn from these data:

1. The present 23 flowsheet (Figure I-1) yields decontamination factors of 2×10^4 for gross fission products, 10^4 for thorium and 1×10^5 for protactinium.
2. The 23 lost in the aqueous raffinate (AR) as inextractable 23 is 0.05% of the total at the 23 concentration found in metal irradiated 100 days at Hanford, and the overall 23 loss for one cycle of solvent extraction is 0.10% or less.
3. Except for inextractable 23 loss (0.04%) no extraction loss could be detected when 9.5 ft. of extraction section was used at 50% of flooding. A 23 loss of 0.05% (including inextractable 23, total AR loss 0.1%) was observed using 9.5 ft. of extraction at 15% of flooding. Calculated from these data, the HETS for 23 extraction was 1.7 ft. at 15% of flooding and 1.5 ft. or less at 50% of flooding.

23 Process Development (Continued)

4. Increasing the scrub length from 11 ft. to 25 ft. increased gross fission product decontamination by less than a factor of 2.

5. The presence of 0.5% methyl isobutyl carbinol in untreated MIBK had no effect on fission product decontamination or 23 loss.

6. Ru decontamination was found to be markedly affected by the acid concentration of the metal feed. The Ru decontamination factor was 40 when a 0.05 N acid deficient, 1.6 M $Th(NO_3)_4$ feed was used and about 2×10^3 for similar feeds at 0.20 N to 0.30 N acid deficient. For all runs, Ru was the limiting activity in the product. A plot of ruthenium decontamination as a function of feed acidity is given in Figure I-2.

7. The irradiated thorium metal used on Runs 17T and 18T had cooled 13 months. The metal used on earlier runs had cooled 18 months to 32 months. Gross fission product decontamination factors for 17T and 18T were 4×10^4 and 5×10^4 with 18 ft. of scrub. From this it was concluded that neither the shorter cooling period of the metal used or the increase from 15% of flooding for Run 17T to 50% of flooding on 18T had any adverse effect on decontamination.

8. Ce decontamination factors continued to be greater than 1×10^5, and were not significantly affected by any of the variations made in either run conditions or scrub section length.

23 Process Development (Continued)

9. Only on Runs 17T and 18T (13 months cooled metal) was sufficient Zr present in the concentrated product for an accurate analysis. The Zr decontamination factors for these two runs were 1×10^5 (Table I-3, Appendix I).

10. The gross fission product decontamination factor for stripping averaged about 1.2 for the six runs. The solvent raffinate contained about 200 β c/m/ml at 10% geometry.

1.3 Product Evaporation, Filtration and Purity

The strip product continued to be a clear solution after evaporation and filtration. The six products produced this month contained 100 grams of 23, making a total of 285 grams recovered through Run 18T. All of the 23 recovered this month was of suitable purity for laboratory processing without further separation.

1.4 Laboratory Cleanup and Concentration

Laboratory purification will begin during the latter part of April. This step is required to separate 23 from small amounts of thorium, aluminum and corrosion products. About 20 grams of highly purified 23 will be shipped early in May, but the cleanup and concentration of the remaining 23 is scheduled to be deferred until after the laboratory purification of the plutonium product from the Chalk River Program. A summary of the process chemistry for the laboratory cycle, and a description of the equipment to be used, is presented in ORNL-122, Laboratory Purification and Concentration of U^{233} by D. C. Overholt.

23 Process Development (Continued)

1.5 Equipment Performance

1.51 Extraction Column Interface Control

During the shutdown of Run 18T, made at 50% of flooding, difficulty was encountered in maintaining an interface shortly after the solvent pump was shut off. This was due to the fact that the volume of aqueous in the line from the column to the jackleg pressure pot was not adequate to replace the solvent which was held-up in the column at the time the solvent flow to the column was discontinued. No difficulty in shutdown was encountered when the solvent rate to the column was decreased over a fifteen minute period, or when the scrub rate was increased by a factor of five at the time the solvent pump was cut off.

During the past month a pressure recorder was installed to record the air pressure supplied to the jackleg pressure pot by the Taylor Fulscope Controller. Experimental data for a typical run are presented in Figure 1.51-1, which shows the pressure in the jackleg pot and the corresponding interface deviation from the control points at various stages of a run.

1.52 Heat Transfer Coefficients for Jacketed Tanks and for Condensers

Jacket heat transfer coefficients were measured on a typical baffled jacket cell tank, Waste Neutralizer A11, and the data is summarized in the following table:

[redacted]

FIGURE 1.51-1

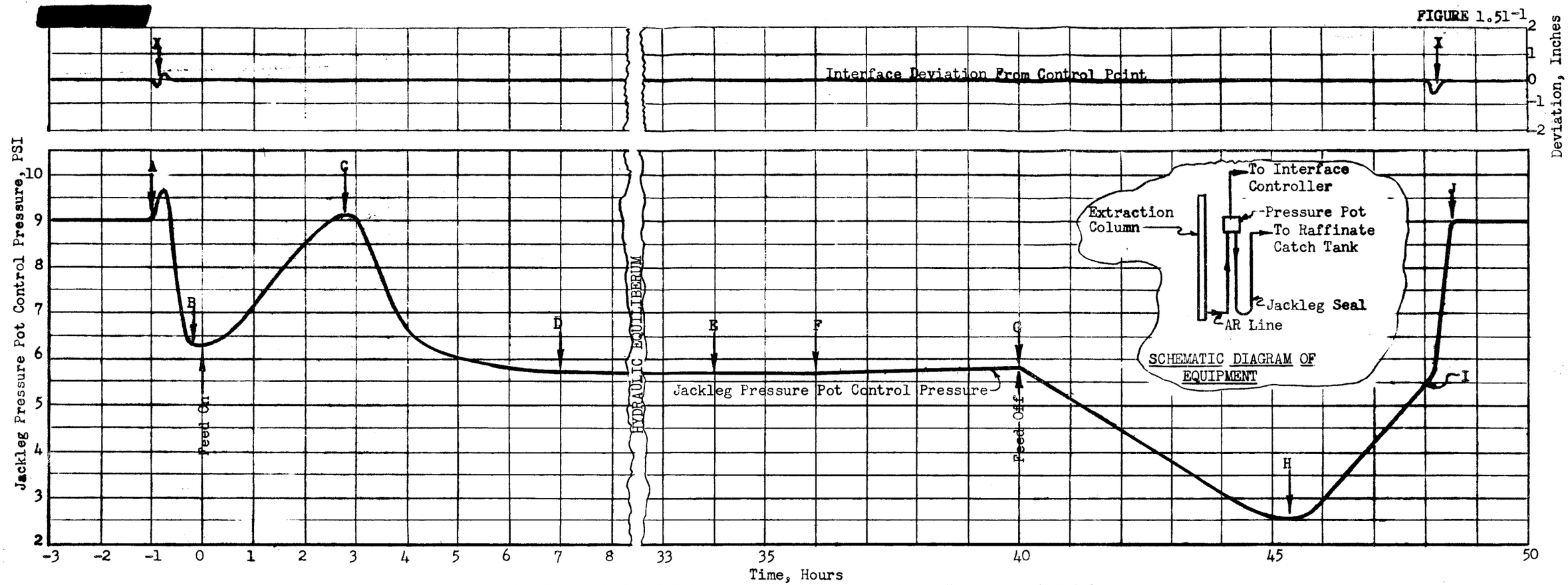

EXTRACTION COLUMN INTERFACE CONTROL STUDY

A. Solvent and scrub pump started. The pressure peak immediately after A is caused by a slight backflow of aqueous into the solvent accumulator when valves are set just prior to starting the solvent pump. Control pressure drops as jackleg fills with aqueous.

B. Hydraulic equilibrium. Feed is started and enters column a few minutes later.

B-C. Dense mixed feed and scrub displaces less dense scrub from column.

C. Mixed feed and scrub reaches bottom of column and starts out raffinate line to jackleg pressure pot.

C-D. Scrub is displaced from raffinate line to jackleg pressure pot by dense mixed feed and scrub.

D. Hydraulic equilibrium.

E. Valves are set to pump "shutdown" scrub to column.

F. Shutdown scrub enters column. Increase of pot pressure due to increased density of scrub.

G. Feed pump off, shutdown scrub and solvent rates are increased to clear 23 from the extraction column.

G-H. Control pressure decreases as shutdown scrub displaces mixed feed and scrub from column.

H. Mixed feed and scrub is cleared from column.

H-I. Mixed feed and scrub is displaced from line to jackleg pressure pot by less dense scrub

I. Solvent and scrub flows are stopped.

I-J. Control pressure rises rapidly as aqueous is forced from the jackleg pressure pot line to replace the solvent that has been flowing up the column. If raffinate line volume isn't sufficiently large, as compared to the volume of flowing solvent in the column, there is danger of blowing the column or the jackleg seal; this is especially important at higher flowrates when the solvent holdup is greater. The pressure increase from I to J may be decreased to a final pressure slightly above that observed at B by gradually stopping the solvent pump while the scrub pump continues to operate, thereby effectively replacing flowing solvent with scrub.

X. Slight deviations from interface set point are attributed to the low sensitivity and reset rates, 15 and 0.5 respectively. These low response values were selected to minimize the possibility of blowing the column or jackleg seal.

DWG. 87766

[redacted]

23 Process Development (Continued)

Tank Condition	U, Btu/hr/sq ft/°F	Temp. Range	Time
No agitation, heating, 10# steam	330	70°F to 210°F	50 min.
Agitated, heating 10# steam	400	70°F to 210°F	40 min.
No agitation cooling, 25# water	80	195°F to 110°F	54 min.
Agitated, cooling, 25# water	140	195°F to 110°F	48 min.

The tank was filled with water and the uninsulated jacket was exposed to normal cell ventilation drafts. Heating coefficients were obtained with essentially all the jacket area condensing the heating steam. All condensers are satisfactory on the basis of heat transfer. Thermocouples in the condensate outlet line instead of the vapor inlet line would be more useful from an operating standpoint, except for the solvent condenser, which should have both inlet and outlet thermocouples.

An overall heat transfer coefficient of 550 Btu/hr/sq ft/°F was determined for a typical single tube helical cooling coil condenser, B12.

PLUTONIUM RECOVERY

Technical - Rigstad

2.0 PLUTONIUM RECOVERY

Pilot Plant processing of the IBP solution which was separated during the Pilot Plant Redox investigations has been completed and the equipment cleansed in preparation for the Chalk River separations program. Detailed data for the Plutonium Recovery processing was reported in the Pilot Plants Section Report for February, ORNL-655. Data is summarized in Table I of this report.

Laboratory facilities for purification of the plutonium product solution are expected to be completed by April 15. The purification process will be tested with some of the Pu concentrate from the IBP recovery program in preparation for purification of the plutonium concentrate from the Chalk River material. Due to the high priority of the Chalk River material, purification of the remaining Redox recovered material will be deferred until completion of the Chalk River separations program.

TABLE I

ORNL Pilot Plant - Plutonium Recovery

Problem Process Data Summary

Run* No.	Original Redox Separation Flowsheet	Overall Decont.		Residual Activity /gm Pu	
		Beta	Gamma	Beta, cts.	Gamma, mv
1	ORNL	1.8×10^2	6.5×10^2	4×10^8	6×10^4
2	ORNL	2.5×10^2	3.7×10^3	2×10^8	3×10^3
3	ORNL-ANL	4.1×10^2	2.2×10^3	4×10^8	3×10^4
5	ORNL-ANL	6.6×10^2	3.8×10^3	3×10^8	2×10^4
7	ORNL-ANL	6.7×10^3	4.9×10^3	4×10^8	9×10^4
8	ORNL-ANL	1.7×10^4	9.7×10^3	1×10^8	1×10^4

* Second cycle runs for 4 and 6 not made.

CHALK RIVER SEPARATION

Technical - Rigstad, Gresky, Landry, Sadowski, Winget

Operators - Benson, Groover Jennings, Ledbetter, McLellan, Shields, Sexton Strader, Wiggins

3.0 CHALK RIVER SEPARATION

Processing of the first batch of fuel material irradiated at Chalk River was begun on March 23 after the necessary equipment changes and new facilities had been completed,and dummy runs of the KAPL modified second cycle were made. Flowsheets for the first and second cycles were established and can be found in Appendix II, Figures II-1 and II-2.

3.1 Operating Procedures

3.11 Metal Dissolving

The aluminum jackets will be removed by the standard 10% NaOH - 20% $NaNO_3$ method and the uranium slugs will be dissolved in HNO_3 without heel as described in the February report.

3.12 First Cycle Flowsheet

The first cycle will be operated under conditions of the ORNL #1 florsheet unless unusual plutonium losses are experienced, in which case the KAPL Hybrid Flowsheet may be tested.

3.13 Second Cycle Flowsheet

The second cycle will be operated under modified conditions of the KAPL Hybrid Flowsheet. The first will be carefully checked during its progress to forestall any abnormalties of operation, loss, etc.

Chalk River Separation (Continued)

3.14 Third Cycle Flowsheet

Final purification in the laboratory will be carried out in Bldg. 204. The tentative procedure being developed by the Laboratory Section involves a batch solvent extraction step utilizing hexone as extractant. Tests of the procedure will be carried out with the product from the plutonium recovered from Redox IBP material.

3.2 Second Cycle Hybrid Flowsheet Test Results

Three tests utilizing a synthetic feed were made in column II-A to establish empirically conditions of organic acidity which would allow control of 0.05 N HNO_3 at the feed plate. This was considered critical in the Hybrid procedure for decontamination, Pu loss, and prevention of $Fe(OH)_3$ precipitation.

With MIBK acidity as the variable, it was observed that a change from 0.38 to 0.41 N HNO_3 in II-AX corresponded to a change from 0.1 N acid deficient to 0.1 N acidity in the aqueous at the feed-point. It was recommended by KAPL representatives that the first run be made under conditions which allow a 0.1 - 0.15 N acid deficiency at the feed-point. The run will be checked periodically to detect crud formation.

3.3 Construction Status

The installation of the additional facilities required for the CR Separations Program is approximately 90% complete. The Pilot Plant equipment modifications, and the new waste storage and processing facilities in the north tank farm area and Bldg. 706-A are complete. The 204 Bldg. laboratory is behind schedule by approximately three weeks due to the delay in equipment procurement, but is expected to be completed in time for the purification of the Pilot Plant material.

Chalk River Separation (Continued)

The modifications to the processing equipment include:

(a) Lowering the jackleg on column 1A.

(b) Converting the product evaporator in Cell III from a single to a double stage evaporator.

(c) Installing sampling valves near the feed-point in column II-A.

3.4 Program

First cycle column operations for Run IRC and slug charging for Run IIRC will be started on April 4. It is expected that processing will be continued at the rate of about one batch of material every 10-14 days and will be completed about June 15 to July 1, 1950.

RADIOCHEMICAL WASTE PROCESSING

Technical - Shank

4.0 RADIOCHEMICAL WASTE PROCESSING DEVELOPMENT

4.1 Waste Evaporator Operating Summary

The ORNL Radiochemical Waste Evaporator processed 260,000 gallons of mixed waste at an overall β D.F. of 1.8×10^3 to give an average condensate discharge activity of 1.1×10^{-9} β curies/cc. The average activity of the Settling Basin was 9×10^{-11} curies/cc of which 10% was contributed by the evaporator operations.

4.2 Experimental Progress

Pound samples of anti-foam agents Nonisol 300 and Alrowax 140 were obtained for field testing in the Waste Evaporator under operating conditions. Unsatisfactory results were obtained from both agents with the specific causes being as yet undetermined. Further field testing is to be deferred until a satisfactory foam level indicator is installed.

Final decision to purchase the proposed evaporator condensate resin columns has been made, but awarding of the purchase contract has been delayed. The final installation date has been deferred until September with the design to proceed without priority.

Radiochemical Waste Processing Development (Continued)

4.3 Program

The testing of a mock-up of the proposed evaporator foam level indicator will be completed in April.

The 2" ø x 6'-0" cation-anion resin column test system on the evaporator condensate will not be installed. All future condensate resin column investigations will be on a laboratory scale until installation of the permanent condensate resin columns at which time plant operating conditions will be investigated.

Investigation program on entrainment separators is to continue.

ORNL WASTE URANIUM RECOVERY UNIT

Technical - Stewart

5.0 ORNL METAL RECOVERY PLANT

The preliminary design of the ORNL Metal Recovery Plant by the Design Section of the Chemical Technology Division has been completed and the Construction Request submitted. The preliminary drawings of the building structure have been revised and are sufficiently complete to permit preparation of construction drawings. A chemical flowsheet has been established to permit complete equipment evaluation.

5.1 Design Status

The establishment of an improved flowsheet and laboratory data has permitted the sizing of most of the pieces of equipment, the services required for each and their location under the following conditions:

Design Basis: Tons of Metal Available - 155
Pounds of U to be recovered/24 hr. day - 750
Working days - 414
Calendar Days (W.D./.7) = 595
Plutonium to be recovered

Flow Rates:		
AS	1 Vol.	610 gpd
AF	2 Vol.	1230 gpd
AX	4 Vol.	2470 gpd
BX	1.25 Vol.	1640 gpd
BS	1 Vol.	610 gpd
CX	5 Vol.	3080 gpd

ORNL Metal Recovery Plant (Continued)

Column Data:	Column	Service	Diam.	Length
	A	Extraction	6.5"	41'
	B	Partitioning	6.5"	36'
	C	Stripping	11"	31'
	J	Solv. Scrub	4"	8'

5.2 Program

The program for the forthcoming month consists of the issuance of the chemical flowsheets, the equipment flowsheets and schematic flowsheet of the process. Upon approval of the Construction Request, purchases may be made on established items and bids requested on other pieces of equipment.

25 RECOVERY

Technical - Rom

6.0 25 RECOVERY

6.1 Terminal Report

Publication of The Terminal Report of ORNL Pilot Plant Development of the Materials Testing Reactor 25 Recovery Process, ORNL-676, is scheduled next period.

6.2 U^{235} Material Balance

Interferences in the uranium analyses of enriched feed and product samples necessitated re-analysis of these samples. The new results, shown with limits of error, were: feed, 2298 $\pm$ 120 gms; product, 2258 $\pm$ 33 gms; measured removals from the system were 13.5 $\pm$ 7 gms. as before. This resulted in an apparent material balance deficiency of 26.5 $\pm$ 125 gms. which is within the limit of error of the analysis. A separate memo covering this work is to be issued in the coming period.

6.3 Fission Burnup

A memo is being issued on the amount of uranium consumed by fission, as calculated on several different bases, for the enriched slugs used in 25 Recovery Process verification.

7.0 MISCELLANEOUS ADMINISTRATIVE

The permanentization of the 205 Bldg. is approximately 10% complete. Completion of the entire building by J. A. Jones Construction Company is scheduled for September 30, 1950.

C. A. Gifford, Research Operator, was transferred to the Reactor Technology Division effective March 1, 1950.

A. T. Gresky entered the Pilot Plants Section on loan from the Laboratory Section on March 13, 1950, to assist in the Chalk River separations program.

The 807 Operations Manual, originally issued as C.F. #49-10-238, will be issued as a formal report, ORNL-647, as soon as the report can be varityped. It is estimated that this will take about two months.

APPENDIX I

23 PROCESS DEVELOPMENT

Objectives of Runs

Except for the variations noted below, the present 23 process flowsheet, shown in Figure I-1, Appendix I, was used for all runs. The major objectives of runs completed during March were as follows:

13T - To investigate the effect of increased scrub length on decontamination and losses. The column consisted of 25 ft. of scrub section and 16 ft. of extraction section.

14T&15T - To investigate the effect of varying the acid concentration of the metal feed on decontamination. Run 14T was made with a metal feed 0.05 N acid deficient, and Run 15T with a feed 0.30 N acid deficient. The standard column of 30 ft. extraction section, 11 ft. of scrub section was used.

16T - To investigate the effect of gross amounts of solvent impurities on decontamination. Untreated methyl isobutyl ketone which was made 0.5% in methyl isobutyl carbinol was used.

17T - To determine the HETS for 23 extraction at 15% of flooding rate. The column consisted of 9.6 ft. of extraction section with 18 ft. of scrub section.

18T - To determine the HETS for 23 extraction at 50% of flooding, the effect on decontamination of increased flowrate, and to test equipment performance at 50% of the flooding rate (flooding occurs at about 800 gal/hr/ft^2).

[redacted]

[redacted]

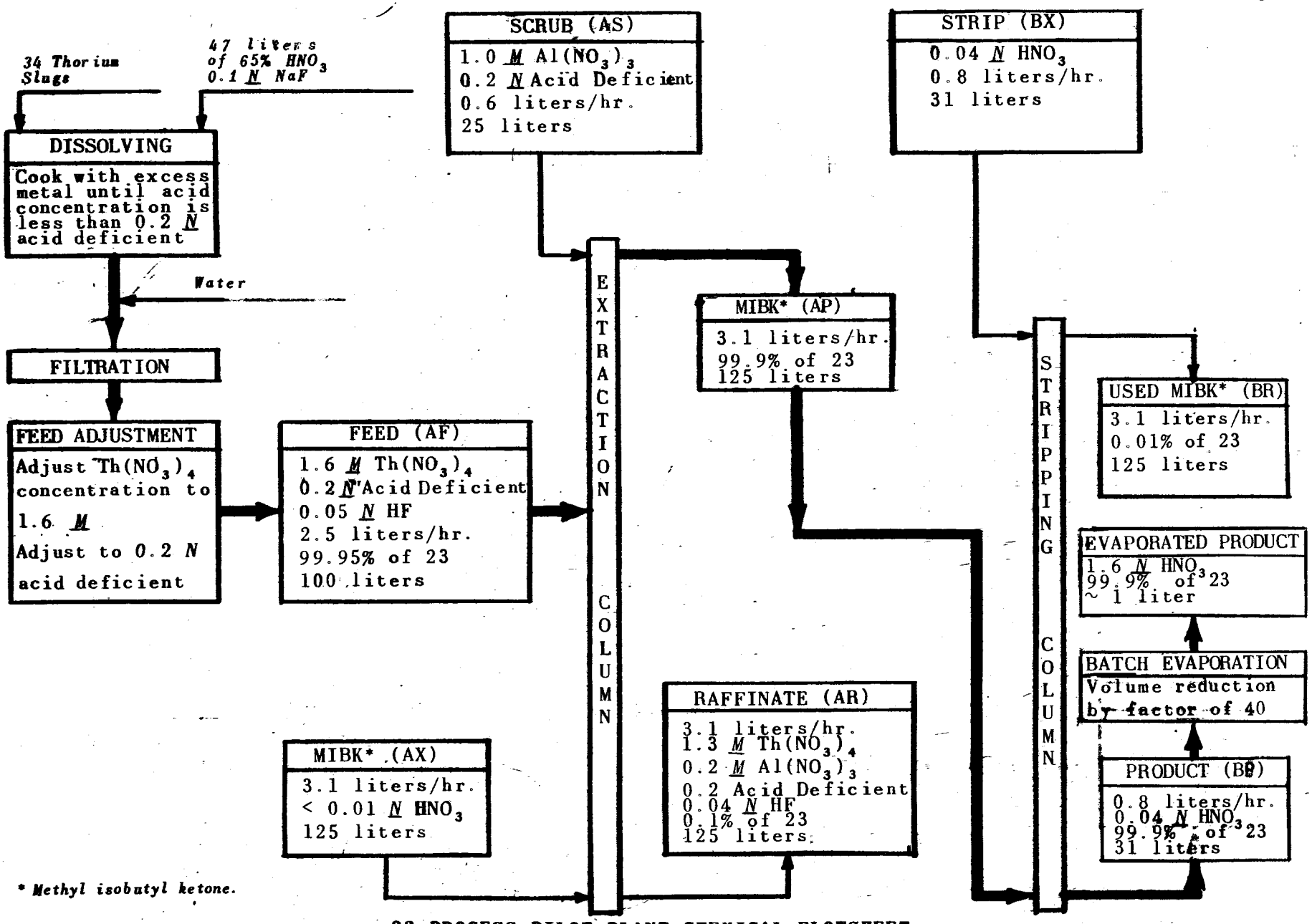

* Methyl isobutyl ketone.

23 PROCESS PILOT PLANT CHEMICAL FLOWSHEET

FIG. I-1
DWG. 8767

TABLE I-1

ORNL 23 PILOT PLANT

23 Losses

Run No.	$Th(NO_3)_4$ Conc. in AF Molar	23 Concen. in AR Mg/liter	23 Losses - Percent AR	BR	Dissolver Residual (1)	Extraction Length-Feet
1T	1.6	0.093	0.14	.002	0.001	27
2T	1.5	0.10	0.18	.004	0.05	27
3T	1.6	0.075	0.12	.009	0.06	27
4T	1.6	0.093	0.08	.002	0.02	27
5T	1.8	0.12	0.10	.001	0.07	27
6T	1.9	0.13	0.06	.001	0.10	27
7T	1.8	0.14	0.10	.003	0.09	27
8T	1.4	0.057	0.08	.002	0.06	27
9T	1.2	0.066	0.06	0.002	0.24	27
10T	1.6	0.083	0.05	0.001	0.08	27
11T	1.6	0.097	0.07	0.006	0.05	27
12T	1.6	0.088	0.06	0.003	0.02	16
13T	1.6	0.090	0.06	0.008	0.01	16
14T	1.6	0.066	0.04	0.006	0.03	27
15T	1.6	0.065	0.05	0.003	0.01	27
16T	1.6	0.062	0.04	0.003	0.01	27
17T	1.6	0.133	0.10	0.002	0.02	9.5
18T(2)	1.6	0.080	0.05	0.005	0.02	9.5

(1) This is the fraction of 23 lost with the coating removal solution and is due entirely to insufficient washing of the dissolver after dissolving.

(2) All runs made at 15% of flooding capacity except 18T which was made at 50% of flooding.

[redacted]

TABLE I-2

ORNL 23 PILOT PLANT

Gross Fission Product Activity and Decontamination Factor
Conditions of Present 23 Flowsheet, Figure I-1, Used Except as Noted

Run No.	Feed (AF) Acid Deficiency Normal	Length of Scrub Section Feet	Gross Activity of the Feed cts/min/mg			Sp. Fission Product Activity of Feed(2)		Sp. Activity of BP β cts. or γ mv/mg of 23				Gross Fission Product Decont. Factors	
			Beta $\times 10^{-7}$	mv Gamma $\times 10^{-3}$	23 Alpha $\times 10^{-6}$	Beta cts/mg 23 $\times 10^{-3}$	Gamma mv/mg 23 $\times 10^{-3}$	Gross Beta $\times 10^{-3}$	FP(3) Beta $\times 10^{-3}$	Gross Gamma	F.P.(3) Gamma	Beta	Gamma
12T	0.20	25	1.5	3	2.2	8	14	3.7	1.0	0.9	0.4	8×10^4	4×10^4
13T	0.22	25	2	3	2.3	10	16	4.2	1.4	0.8	0.4	7×10^4	4×10^4
14T	0.05	11	2	3	2.4	10	14	82	80	12	11	1.3×10^3	1.2×10^3
15T	0.30	11	2	3	2.1	11	14	5.0	2.0	1.1	0.5	5×10^4	2×10^4
16T	0.18	11	2	3	2.3	11	16	6.4	3.4	1.0	0.5	3×10^4	3×10^4
17T	0.15	18	3	5	2.2	13	19	4.5	1.5	1.0	0.5	9×10^4	4×10^4
18T(1)	0.22	18	3	6	2.0	13	26	5.6	2.6	1.1	0.5	5×10^4	5×10^4

(1) Run 18T was made at 50% of flooding capacity, all other runs at 15% of flooding.

(2) Obtained by subtracting Ru activity from gross activity and dividing by "23" concentration.

(3) Obtained by subtracting 23 and Pa activity from gross activity and dividing by "23" concentration.

[redacted]

[redacted]

TABLE I-3

ORNL 23 PILOT PLANT

Specific Fission Product and Thorium Decontamination Factors
Present 23 Flowsheet, Figure I-1, Used Except as Noted

Run Number(1)	12T	13T	14T	15T	16T	17T (4)	18T
Acid deficiency of AF, N	0.20	0.22	0.05	0.30	0.18	0.15	0.22
Scrub Section Length, Ft.	25	25	11	11	11	18	18
Ru Beta							
AF cts/min/mg of 23	2×10^6	3×10^6	3×10^6	3×10^6	3×10^6	3×10^6	4×10^6
PP(2) cts/min/mg of 23	800	500	8×10^4	2×10^3	2×10^3	2×10^3	1.7×10^3
Decontamination Factor	3×10^3	6×10^3	40	1.5×10^3	1.5×10^3(3)	600	2×10^3
Zr Beta							
AF cts/min/mg of 23	1.7×10^5	3×10^5	4×10^5	4×10^5	8×10^5	3×10^6	4.5×10^6
PP(2) cts/min/mg of 23	8	4	3	5	9	30	40
Decontamination Factor	2×10^4	8×10^4	1.3×10^5	8×10^4	9×10^4(3)	1×10^5	1.4×10^5
Ce Beta							
AF cts/min/mg of 23	6×10^7	7×10^7	7×10^7	8×10^7	8×10^7	8×10^7	9×10^7
PP(2) cts/min/mg of 23	70	80	80	160	130	1.9×10^3	4×10^2
Decontamination Factor	8×10^5	$8. \times 10^5$	8×10^5	5×10^5	6×10^5(3)	5×10^4	2×10^5
Thorium							
Decontamination Factor	2×10^5	2×10^5	1.2×10^5	1.7×10^5	1.3×10^5(3)	5×10^4	4×10^4

(1) All runs were made at 15% of flooding except 18T which was made at 50% flooding.

(2) Ru, Zr and Ce analyses were made on the concentrated strip product.

(3) The solvent used for 16T was untreated MIBK to which was added 0.5% methyl isobutyl carbinol.

(4) The low specific F.P. decontamination factors for Run 17T are due to carryover of activity from a test run made between 16T and 17T to establish a shutdown procedure for a high flowrate run.

[redacted]

[redacted]

DWG. 8768
FIGURE I-2

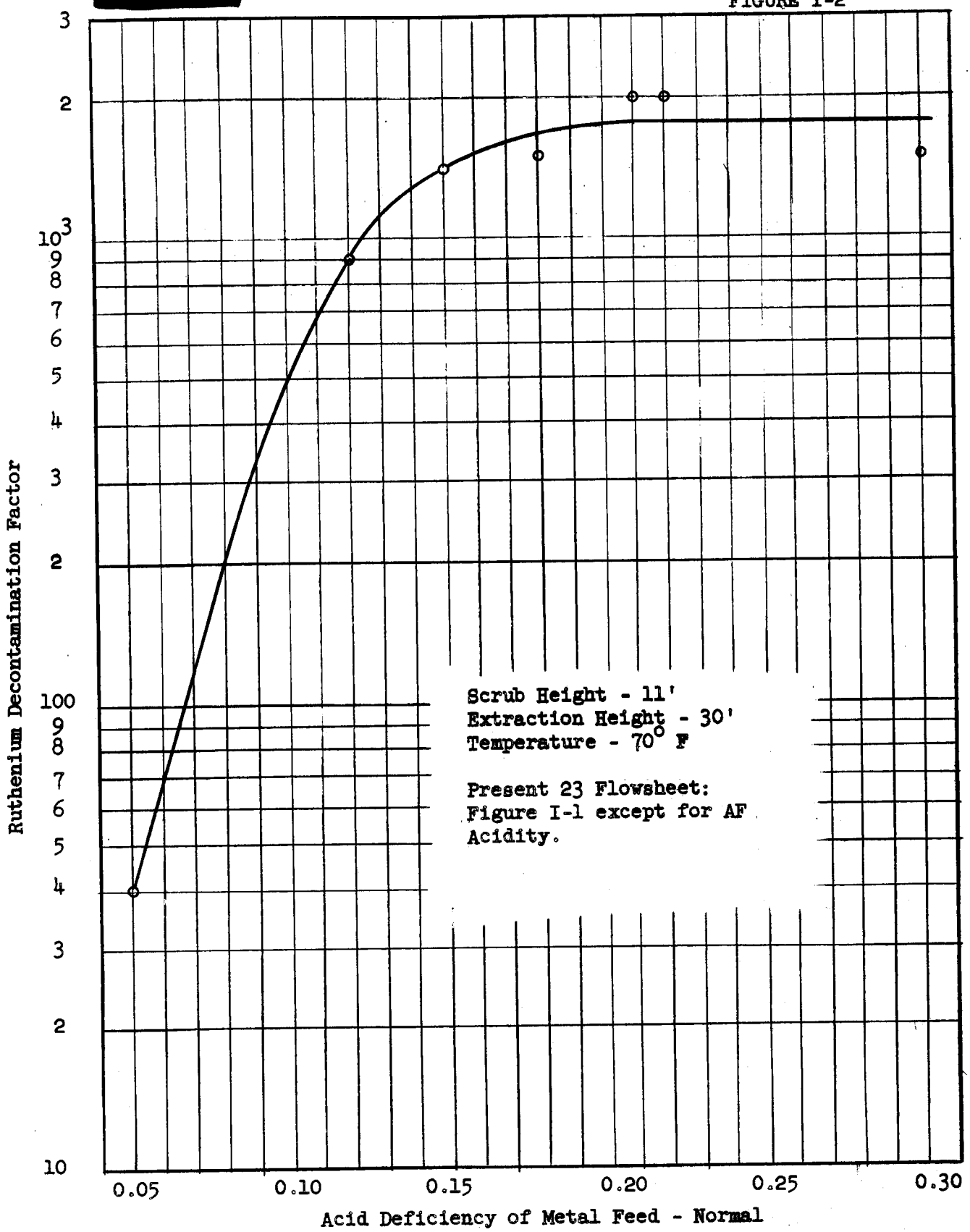

RUTHENIUM DECONTAMINATION AS A FUNCTION OF FEED ACIDITY

[redacted]

APPENDIX II

The following two flowsheets give the contemplated conditions to be used in separating plutonium from the segregated sections of the Chalk River fuel rods and special HEW material.

[redacted]

[redacted]

FIGURE II-1
DWG. 8769

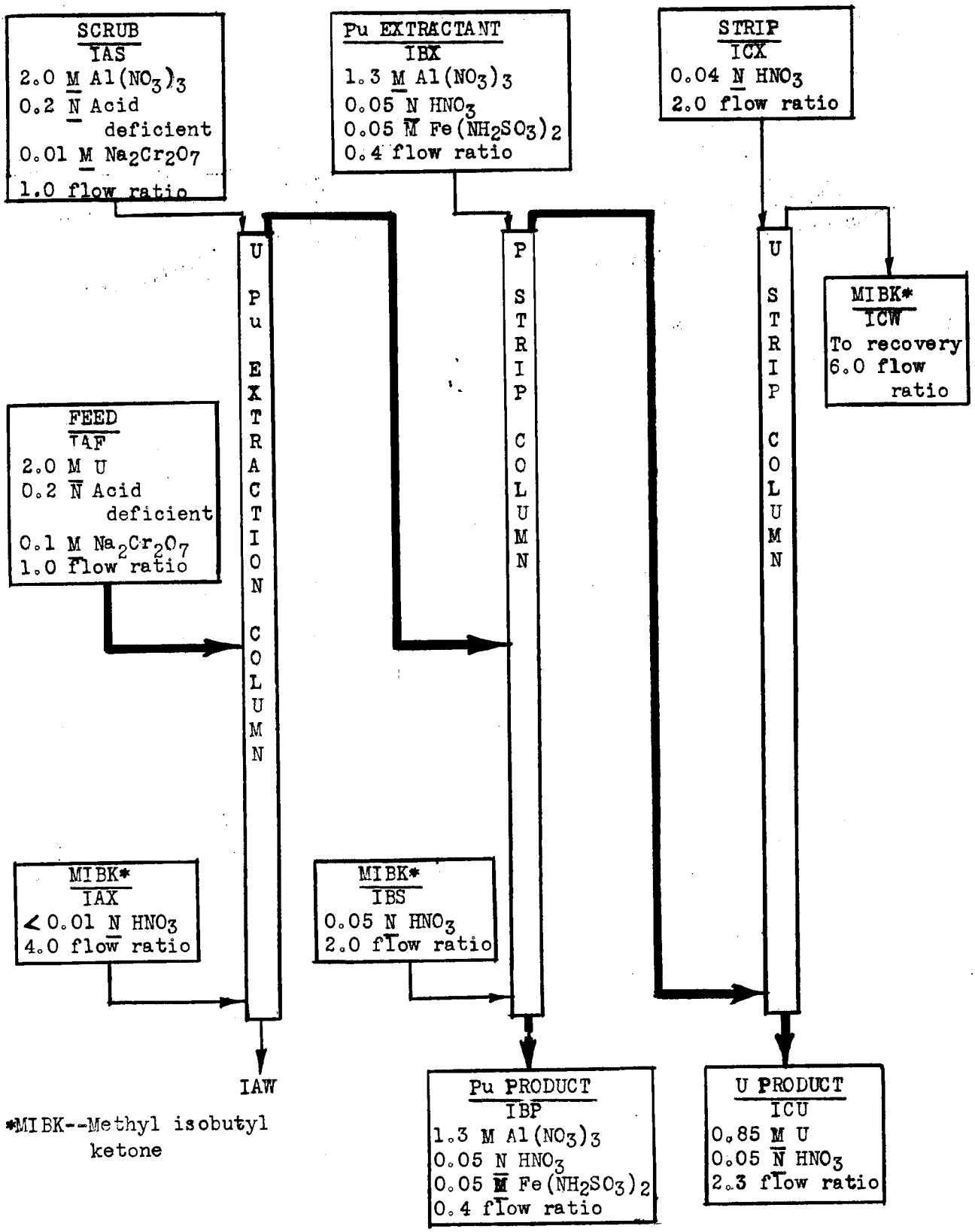

*MIBK--Methyl isobutyl ketone

TENTATIVE CHALK RIVER FLOWSHEET
FIRST PLUTONIUM--URANIUM CYCLE

March, 1950

[redacted]

[redacted]

FIGURE II-2
DWG. 8770

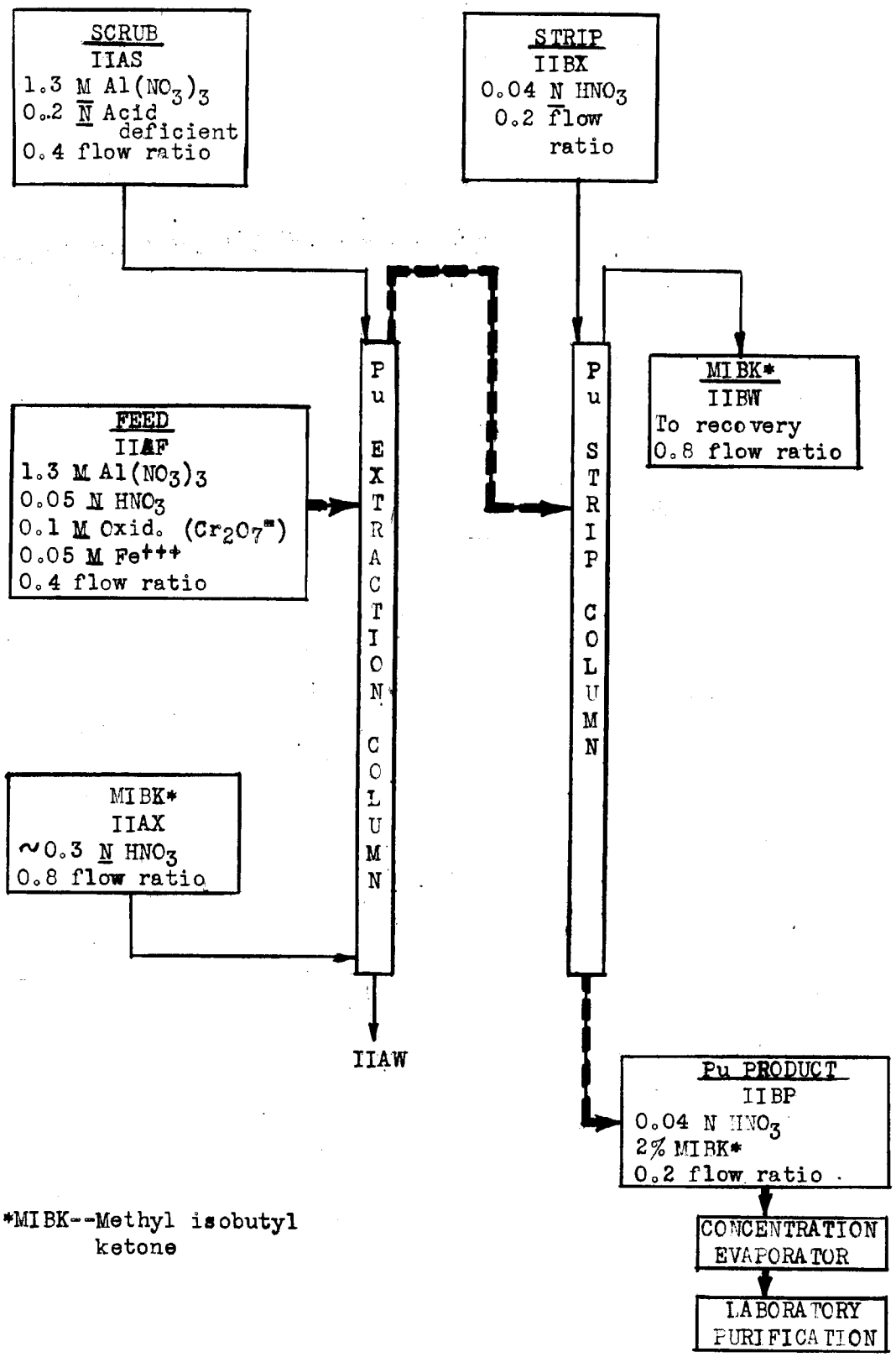

*MIBK--Methyl isobutyl ketone

TENTATIVE CHALK RIVER FLOWSHEET

SECOND PLUTONIUM CYCLE

March, 1950

[redacted]