[redacted]

MARTIN MARIETTA ENERGY SYSTEMS LIBRARIES
3 4456 0360504 3

ORNL 678
Progress Report

AEC RESEARCH AND DEVELOPMENT REPORT

DECLASSIFIED
CLASSIFICATION CHANGED TO
BY AUTHORITY OF
BY:

LABORATORY RECORDS
1954

OPERATIONS DIVISION

MONTHLY REPORT FOR MONTH ENDING MARCH 31, 1950

OAK RIDGE NATIONAL LABORATORY
CENTRAL RESEARCH LIBRARY
CIRCULATION SECTION
4500N ROOM 175
LIBRARY LOAN COPY
DO NOT TRANSFER TO ANOTHER PERSON
If you wish someone else to see this report, send in name with report and the library will arrange a loan.
UCN-7969 (3 9-77)

OAK RIDGE NATIONAL LABORATORY
OPERATED BY
CARBIDE AND CARBON CHEMICALS DIVISION
UNION CARBIDE AND CARBON CORPORATION
UCC
POST OFFICE BOX P
OAK RIDGE, TENNESSEE

[redacted]

[redacted]

ORNL 678
This document consists of 36 pages. Copy 6 of 42, Series A.

Contract No. W-7405, eng-26

OPERATIONS DIVISION

MONTHLY REPORT

for

Month Ending March 31, 1950

by

L. B. Emlet

Date Issued: APR 21 1950

OAK RIDGE NATIONAL LABORATORY
operated by
CARBIDE AND CARBON CHEMICALS DIVISION
Union Carbide and Carbon Corporation
Post Office Box P
Oak Ridge, Tennessee

[redacted]

MARTIN MARIETTA ENERGY SYSTEMS LIBRARIES
3 4456 0360504 3

[redacted]

DISTRIBUTION

1. G. T. Felbeck
2-3. 706-A
4. 706-B
5. Biology Library
6-7. Training School
8-11. Central Files
12. C. E. Larson
13. J. A. Lane
14. A. M. Weinberg
15. A. Hollaender
16. E. A. Bailey
17. J. A. C[illegible]
18. D. G. R[illegible]
19. A. F. H[illegible]pp
20. M. E. [illegible]mser
21. E. J. [illegible]tkowski
22. H. F. [illegible]ringfield
23. J. A. [illegible]vartou[illegible]
24. J. H. [illegible]rye
25. K. Z. [illegible]organ
26. J. S. [illegible]elton
27. K. A. [illegible]owler
28. L. P. [illegible]iordan
29. E. J. [illegible]urphy
30. D. W. [illegible]ardwell
31. A. H. [illegible]nell
32. C. S. [illegible]arrill
33. H. J. [illegible]cAlduff
34. C. E. [illegible]inters
35. F. L. [illegible]teahly
36. L. B. [illegible]mlet
37. Technical Information Division, ORO[illegible]
38-40. AEC, [illegible]ashington
41-42. Hanford Engineer Works

[redacted]

SUMMARY

ORNL-678

1. Lost pile operating time averaged 7.5% vs. 8.3% for February, 1950. (Page 4.)
2. Ruptured slugs were detected on two occasions during the month and discharged without difficulty. (Pages 4 and 5.)
3. The bearings failed on the No. 2 pile cooling fan after only four and a half months' service. (Pages 5 and 6.)
4. The I^{131} process equipment was shut down for repairs. A stock of I^{131} isolated from "W" slugs prevented curtailment of shipments. (Page 7.)
5. Preparations are underway to recover uranium fission products from the CR material being processed by the Chemical Technology Division. (Pages 13 and 14.)
6. A leaking valve in the North Tank Farm resulted in an emergency replacement job. (Pages 20 and 21.)
7. The activity discharged into White Oak Creek totaled 8.19 beta curies, as compared to 11.19 curies for February, 1950. Approximately 940 millicuries of this total were contributed by the evaporator condensate. (Pages 21 & 22.)
8. RaLa Run #40 was completed and shipped without incident. Approximately 3,440 curies as $Ba(NO_3)_2$ were isolated. Los Alamos reported it to be of high quality. (Pages 24 and 25.)
9. There were 662 shipments of radioisotopes during the month, compared to 548 in February 1950. (Page 26.)
10. A report on the activation analyses of a sample of bentonite, submitted by the California Research Corporation, was issued. (Pages 29 and 30.)

[redacted]

A. PILE DEPARTMENT

I. Operating Data:

	MARCH 1950	FEBRUARY 1950	YEAR-TO-DATE 1950
Total Accumulated KWH	2,487,173	2,165,931	7,093,044
Average KW/operating hour	3612.62	3516.03	3583.79
Average KW/24-hour day	3342.97	3223.11	3283.82
Percent Lost Time	7.5	8.3	8.4
Approx. Excess Pile Reactivity	120-130 inhours	120-130 inhours	-----
Slugs Charged	126	237	608
Slugs Discharged	126	237	561
Product Made (grams)	90.77	79.04	258.87
Product Discharged (grams)	9.52	17.08	39.69

II. Pile Operations:

The pile-down time was 7.5% for the month, compared to 8.3% for the previous month and 8.4% for the year-to-date.

Very little permanentization work was done in the Pile Building during the month. The major items remaining to be done are replacement of the pile control wiring, rebuilding of the inlet filter house, replacement of the wood structure now housing the fan motors and controls with a concrete block structure, and replacement of the pile cooling fans. The replacement of the wood structure at the Fan House was begun during the latter part of the month. The other work has not been started.

Ruptured slugs were detected in two metal channels during the month and discharged without difficulty. Inspection of the discharged slugs in the canal revealed that there were two ruptured slugs in each row. The rupture was found in metal channel No. 2465 by visual inspection with no indication of its presence having been given by the probe. The rupture was found in metal channel No. 0873 by scanning after its presence had been indicated by the probe.

II. Pile Operations: - (Continued)

These slugs were exposed as follows:

Rupture No.	Metal Channel No.	Date Discharged	Days in Pile	Approximate Maximum Metal Temperature in Channel
69	2465	3-27-50	1541	190° C.
70	0873	3-30-50	129	125° C.

The excess pile reactivity at the end of the month remained unchanged at 120 to 130 inhours.

III. Filter House:

The following table compares the pressure drop across the exhaust air filters last month and this month with that experienced immediately after replacement of filters:

	GLASS WOOL FILTERS		CWS #6 PAPER		ACROSS HOUSE	
Date	Inches w.g.	% Increase	Inches w.g.	% Increase	Inches w.g.	% Increase
Clean Filters	1.1	--	1.0	--	3.3	--
2-28-50	3.3	200	2.6	160	7.1	115
3-31-50	3.5	6	2.8	8	7.4	4

Filter House operation has been normal throughout the month.

IV. Fan House:

The No. 3 fan was cleaned of a coating of tar and zinc chloride on March 1, 1950. This material was deposited on the rotor by a smoke that was admitted on the suction side of the fan so that the AEC Meteorological Group could study the dispersion of stack gases during different weather conditions. Due to the non-uniformity of the coating, the fan was vibrating prior to the removal of the coating. While it is expected that this study is completed, if any further addition of smoke is required, it will be injected on the pressure side of the fans.

IV. Fan House: - (Continued)

The bearings were changed on the No. 2 fan on March 15, 1950. The inboard bearing had a pit about 3/32" in diameter and 1/32" deep in the outer race. These bearings had been in service only since October 29, 1949.

Except for the difficulty due to the deposit on No. 3 fan and the bearing failure on the No. 2 fan, the fans operated normally throughout the month.

V. Radioisotopes:

The following is a comparison of the radioisotope and research samples charged into the pile during March, 1950, with those handled in February, 1950:

	FEBRUARY, 1950		MARCH, 1950	
	Research	Radioisotopes	Research	Radioisotopes
Stringers 13, 14, and 16	20	157	48	159
Hole 22 (Pneumatic Tube)	41	11	49	8
All Other Holes	9	11	10	17
TOTAL BY GROUPS	70	179	107	184
TOTAL FOR MONTH	249		291	

At the end of March, 1950, there were 419 cans of target material in Stringers 13, 14, and 16, compared to 407 cans of target material in these stringers at the end of February, 1950.

VI. Water Demineralization Building:

The operation of the building was normal throughout the month with 621,800 gallons of water being demineralized of which 42,000 gallons were also deaerated.

PRODUCED:	MARCH 1950	FEBRUARY 1950	YEAR-TO-DATE 1950
Demineralized	621,800	498,800	1,727,200
Deaerated	42,000	19,100	88,800

B. CHEMICAL SEPARATIONS AND RADIOISOTOPE DEVELOPMENT DEPARTMENTS

I. Radioisotopes:

1. General

Construction personnel completed the installation of the 706-C and 706-D cell exhaust systems to the 900 Area stack. Initial operation proved satisfactory. Also, excavation and installation of the 706-C and 706-D hot off-gas lines were started.

ORNL personnel reinstalled the 706-C and 706-D exhaust blower motor after repairs by the vendor.

2. Iodine (I^{131} - 8d)

Sixteen ORNL slugs and three Hanford slugs were processed and 21,532 millicuries were shipped. The material isolated from the Hanford slugs provided a stockpile of material for shipments scheduled during the shutdown work.

On March 14, 1950, a high air count was experienced in 706-C at the beginning of the dissolver sparging operation. Tests made after decontamination of the equipment indicate that this activity probably came from a leak in the dissolver sample line on top of the cell.

During the latter part of the month the equipment in the 706-C cell was decontaminated and needed repairs made; final testing of the equipment is not yet complete. In addition to the four leaks known to exist before the decontamination of the cell, an additional twelve leaks were found and repaired. It appears that this equipment is rapidly wearing out.

3. Phosphorus (P^{32} - 14.3d)

Twelve, 2,000-gram cans of irradiated sulfur and sixteen Hanford-irradiated sulfur slugs were processed; 7,004 millicuries were shipped. The quantity isolated from the Hanford-irradiated slugs was very low because of the delay in shipment from Hanford to ORNL. Less than 800 millicuries of P^{32} were obtained from these sixteen slugs.

Phosphorus Development Work

The installation work on extraction equipment in Building 906 proceeded very slowly this month, largely because of delays in shop fabrication of parts. The job is about 60% completed.

Tests were made with infra-red lamps as a source of heat for the glass funnel between the melting and extraction apparatus, which is used to allow observation of the stream of molten sulfur dropping into the extractor. This method of heating is not satisfactory, since the temperature cannot be maintained high enough and visibility is poor because of the accumulation of a crust of sulfur. A special electrical heating mantle will be tried.

Copper heating coils have been installed around all fittings and valves and preliminary heating tests will be made within the next two weeks. These tests will determine if further design work is necessary.

Approximately 100 millicuries of carrier-free P^{32} was made for special orders. Samples were taken of the various waste fractions during the purification procedure and will be examined by a university scientist to determine the nature of an unknown 29-day activity which he thinks occurs in very small quantity in our P^{32}. [redacted]

3. Phosphorus Development Work - (Continued)

One new-type sulfur irradiation can was received and tested. The capacity is 6.6 pounds of sulfur, or about 50% more than the can now used, which is normally filled only two-thirds full. The new can design permits the passage of cooling air around all sides and it is believed that the sulfur will remain unmelted during irradiation. This will allow the can to be completely filled, instead of the present practice of filling to just below the loading nipple. Tests will be made in the pile to determine the temperatures reached within the new can.

4. Carbon (C^{14} - 5100y)

No runs were made this month.

The following is a listing of the C^{14} available in unprocessed Be_3N_2 and $Ca(NO_3)_2$ slugs:

No. of $Ca(NO_3)_2$ Slugs in Pile	2,535
No. of $Ca(NO_3)_2$ Slugs in Canal	443
Total C^{14} Content in $Ca(NO_3)_2$ (Estimated)	3,451 mc.
No. of Be_3N_2 Slugs on Hand	851
Total C^{14} Content in Be_3N_2 (Estimated)	38,295 mc.
Total C^{14} Available (Estimated)	41,746 mc.

An inventory of approximately 425.89 millicuries of C^{14} as $BaCO_3$ is on hand.

Carbon (C^{14} - 5100y) Development Work

Design work on the C^{14} equipment for Building 905 was completed. The glassware section will be installed as soon as possible to permit emergency production of C^{14} if our inventory should get too low before the main equipment is installed.

4. Carbon (C^{14} - 5100y) Development Work - (Continued)

Apparatus was set up to convert 3.4 ml. of $C^{14}O_2$ (50% isotopic abundance) to $BaCO_3$ for a special order.

5. Fission Products

Run #SS-21 was started, using the remaining portion of the old Hanford slug UNH which was used for SS-20.

Crude Cs^{137} fractions from SS-21 were concentrated for purification in the alum process.

In an attempt to remove Cs^{137} from the main column (Run SS-21) before the uranium was removed with 0.25 M H_2SO_4, 0.25 M HCl was passed through the column. A large peak of activity appeared after only one column volume passed through and was removed in a total of three column volumes. This was thought to be cesium, but analysis showed it to be almost pure ruthenium. The cesium did not appear after ten column volumes of 0.25 M HCl so the eluant was changed to 0.25 M H_2SO_4, which is usually used to remove uranium. A close check will be maintained to observe the cesium peak.

As soon as SS-21 is stripped from the main column, SS-22, made of UNH from young Hanford slugs, will be started.

The detailed operating procedure has been completed and is being prepared for reproduction. The operation of this equipment will be taken over by the Chemical Separations Department during the next month or so.

a. Niobium (Nb^{95} - 35d)

About 200 mc. of Nb^{95} in citrate were produced for shipment.

[redacted]

5. Fission Products - (Continued)

b. Europium (Eu^{155}-2.5y), Samarium (Sm^{151}-20y), Promethium(Pm^{147}-3.7y)

Separations were continued on the rare earth fractions reported last month. Approximately 2.5 millicuries of Eu^{155} were separated with a purity of 98%, the balance being Y^{91}. Also, 165 millicuries of Pm^{147} with a purity of 87% (contaminated with Ce^{144}) were obtained. The Sm^{151} has not been definitely located but it is believed to be present in very small quantity in the fraction taken off between Eu^{155} and Pm^{147}. The very soft activity which appeared before the Y^{91} peak has not been identified. There is a slight possibility that this is a long-lived Gd; it also may be Sm^{155} appearing out of the correct sequence during citrate elution. These activities will be studied by adding pure stable rare earths and following test column separations by both spectrographic analysis and absorption and decay studies on the radioactivity. There remain portions of Pm^{147} and Eu^{155} in waste fractions which will have to be reprocessed. It is estimated that a total of 600 millicuries of Pm^{147} and 6 millicuries of Eu^{155} remain to be concentrated. A steam-heated Dowex column which will operate at about 100° C. is being set up for fractionation of these more obscure rare earths. The number of "theoretical plates" which can be obtained in a given column may be increased by a factor of 50 to 100 by increasing the temperature from 25° C. to 100° C.

[redacted]

[redacted]

5. Fission Products - (Continued)

b. Europium(Eu^{155}-2.5y), Samarium(Sm^{151}-20y), Promethium(Pm^{147}-3.7y)

While our investigations are by no means complete, it is suggested that the practical yields of Eu^{155} and Sm^{151} are much lower than indicated by the fission yield curves. This may be caused by the very high neutron absorption cross sections of these isotopes, which are thought to be in the order of 5,000 to 30,000 barns; i.e., the radioisotopes are changed by absorbing more neutrons.

c. Strontium (Sr^{90} - 25y)

Approximately 6,000 millicuries of Sr^{90} were purified during the month. All remaining orders were filled from this batch and this supply should last for some time. The temporary strontium apparatus was taken down and will be replaced by permanent equipment of new design.

d. Strontium (Sr^{89} - 53d)

A batch of Sr^{89} containing about 500 millicuries is in process.

6. Tritium (H^3 - 12.1y)

The hood in which high vacuum equipment will be placed for handling tritium and xenon has been completed and installed. Installation of tritium equipment is now proceeding and it should be in operation by May 15, 1950.

An electrically-heated palladium valve (H^3-He^3 separation) was developed in which the palladium tube itself is used as the heating element. Systems now in use have a tungsten coil wrapped around the palladium valve for heating.

[redacted]

7. Cesium (Cs^{137} - 33y)

Design work was started on the equipment for the NH_4 alum-cesium purification process which will be installed in Building 908.

8. CR Waste Project

A 2,300-gallon tank has been buried in the North Tank Farm for collection of Pilot Plant waste for recovery of fission products by the Operations Division. A stainless steel pipe line has been laid down to the South Tank Farm, where initial separations will be made at the old ruthenium plant site.

Two hot runs were made with simulated CR waste, 0.2M in $Al(NO_3)_3$, 0.07 M in $Na_2Cr_2O_7$, 0.25 M in NH_4OH, and saturated with hexone. Various elution agents were tried, such as 0.4 M oxalic acid, NH_4OH, citrate pH 3.0, 3.5, 4.0, and 8.5. The flow sheet is based on one liter of Dowex 50 resin.

[redacted]

FLOW SHEET FOR COLUMN TREATMENT OF CR WASTE

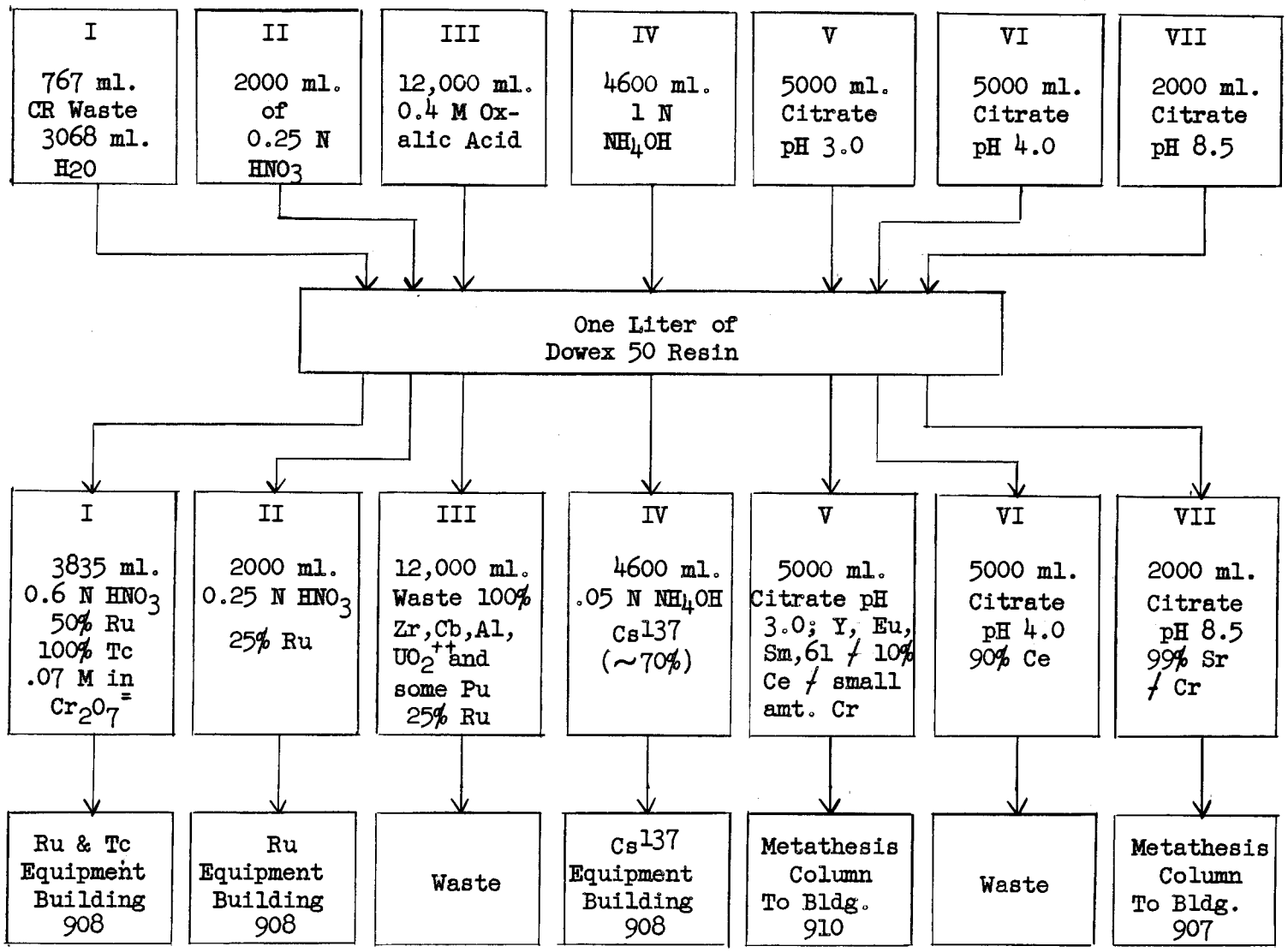

A few details remain to be worked out, as follows:

1. Best subsequent treatment for obtaining Ru from a solution 0.6 N in HNO_3 and .07 M in $Na_2Cr_2O_7$. Precipitation with PtS carrier or distillation with $KMnO_4$-H_2SO_4 will probably be used with a preference for the distillation method for subsequent development work.

2. More quantitative data are required to determine whether Cs^{137} will come off with one normal NH_4OH in a good peak.

3. Citrate elution at pH 3.0 will require more quantitative data, as well as further work to see what happens to chromic ion.

[redacted]

[redacted]

9. Iron (Fe^{55-59} - 4y, 46.3d)

A Hanford sample of normal iron was processed. A cobalt scavenging step was added to our procedure to remove the Co^{60} which always is found in these units. Analysis is given below:

Total Fe Activity	-	107.6 mc
Concentration Fe^{55}	-	0.347 mc/ml
Concentration Fe^{59}	-	0.191 mc/ml
Specific Activity Fe^{55}	-	6.4 mc/g Fe
Specific Activity Fe^{59}	-	3.5 mc/g Fe
Cobalt 60	-	0.0035 mc/ml (0.6%)

As is evident from the above analysis, more than one cobalt scavenging step will be necessary to completely remove the Co^{60} contamination.

10. Chlorine (Cl^{36} - 10^6y)

Chlorine was recovered from a Hanford NaCl sample with the following analysis:

Total Cl^{36}	-	0.35 mc
Concentration Cl^{36}	-	0.0035 mc/ml
Specific Activity	-	0.175 mc/gram Cl
Acidity of HCl	-	0.544 N

11. Protactinium (Pa^{233} - 27.4d)

Thorium carbonate was irradiated in the X-pile and Pa^{233} separated. The method used was as follows: The Pa^{233} was carried on a MnO_2 precipitate; this step was repeated several times with appropriate hold-back carriers, followed by solution of the MnO_2 and solvent extraction of the Pa into di-isopropyl carbinol. The Pa was removed in weak acid.

Analysis:

Total Pa^{233}	-	3.5 mc
Concentration Pa^{233}	-	0.035 mc/ml
Acidity	-	0.35 N
NVM	-	0.5 mg/ml

[redacted]

[redacted]

12. Cyclotron Targets

a. Beryllium (Be^7 - 56d)

About 400 millicuries of Be^7 were recovered from a 100 beam-hour lithium target. This is by far the largest yield yet obtained from any cyclotron target processed here. The yellow material which extracts in acetyl acetone is apparently entirely organic in nature and was destroyed by fuming with HNO_3. No attempt will be made to study this impurity further.

b. Sodium (Na^{22} - 3y)

Various waste solutions containing Na^{22} have been collected for recovery work. Orders for this material have been filled and a small amount is in stock. Several targets are on hand but these will not be processed until Na^{22} in the wastes has been recovered.

c. Manganese (Mn^{52-54} - 6.5d, 310d)

A chromium target was received and processed according to the Berkeley method; practically no activity was recovered. Since the residual solution appeared to contain considerable activity, iron, cobalt, manganese, zinc, chromium, and nickel carriers were added and a sulfide precipitation was made from an ammoniacal solution. The elements were then separated by standard analytical techniques; the Mn fraction carried considerable activity. This was purified by four MnO_2 precipitations from concentrated HNO_3 with $KClO_3$ as an oxidizing agent (a step in the Berkeley procedure). The product solution is being analyzed to determine the relative

[redacted]

12. Cyclotron Targets - (Continued)

c. Manganese (Mn^{52-54} - 6.5d, 310d)

amounts of Mn^{52} and Mn^{54}. Some experimental work was done on the precipitation of MnO_2 at pH 4, using H_2O_2 as oxidant. In this case the chromium is oxidized to the chromate and passes into the filtrate. The various methods will be studied to determine the best procedure.

d. Iron (Fe^{59} - 46.3d)

The first target which was received was used for determining yield and studying the separation procedure. The yield was determined to be 2.5 millicuries on the 36.5 beam-hour target calculated back to the time of bombardment. A persistent unidentified impurity remained with the Fe^{59} in small amount; a tin-scavenging step was made and the iron re-extracted into isopropyl ether.

The sample is now being analyzed.

e. Cobalt (Co^{57} - 270d)

The product from a 10 beam-hour test target (iron metal) is being analyzed. Another 50 beam-hour target is being processed and ion exchange column techniques are being tried; the cobalt is selectively eluted from the column as an amine complex.

13. Miscellaneous Units

a. Calcium (Ca^{45} - 180d)

The calcium batch reported last month was in the form of $CaCl_2$ solution containing 0.04 mc/ml with a specific activity of 0.3 mc/gram Ca.

13. Miscellaneous Units - (Continued)

b. Scandium (Sc^{46} - 85d)

A sample of scandium irradiated in the X-pile was made up as $ScCl_3$ solution for dispensing. Analysis is not complete.

c. Tin (Sn^{113} - 105d)

A Hanford sample of tin was dissolved and prepared as $SnCl_2$ for dispensing. No attempt was made to separate the Sb^{125}. Analysis is incomplete.

14. Miscellaneous Work

a. Cobalt Sources

The following special Co^{60} sources were prepared in various holders as specified by customers: twenty, 2-mc. needles; two, 1.5-curie capsules; one, 70-mc. capsule. Approximately fifty, 1-cm. diamater Co^{60} sources containing a total of 500 curies were silver-plated during the past month.

b. Fe^{55} Source

A test run was made using ferrous ammonium sulfate in weak sulfuric acid as a plating solution for electrolytic deposition of Fe^{55}. The technique appears to be satisfactory and a 24-mc. Fe^{55} source will be made on a 6 cm^2 steel plaque as specified by a customer.

c. P^{32} Plastic Plaques

Several 50% red phosphorus, 50% Bakelite plastic discs were delivered from the K-25 plastic shop this month. A one-week test irradiation was made in the pile and it was found that the plaque softened and flowed into the holder. The

14. Miscellaneous Work - (Continued)

c. P^{32} Plastic Plaques

plaque was completely misshapen in thickness and circular area. Oven tests confirmed our conjecture that this was caused merely by thermal heating. It is presumed that this failure is caused by using the wrong type of plastic or insufficient curing of the thermosetting resin. The problem has again been referred to the K-25 plastics group.

d. Hanford Units

Thirty-five units of various elements were prepared for Hanford irradiation.

e. Corrosion Tests

Corrosion tests on Carpenter 20 and 347 s.s. were made in boiling concentrated HNO_3 for fifty-four hours. The results were as follows:

Carpenter 20	-	89 $mg/dm^2/day$
347 Stainless	-	110 $mg/dm^2/day$

Neither of these materials is satisfactory for dissolver construction. Tests will be made next on titanium, SS-309, SS-317 extra low carbon, and L-605 (cobalt alloy). Of these, titanium is most promising.

f. Minor Design

(1) A shearing tool for cutting radio-cobalt wire was designed and is being fabricated in the shop.

(2) It was found that the filters in all the buildings in the 900 Area do not fit snugly in the frames thus allowing a great deal of dust to be blown into the buildings. Recommendations were made and a work order submitted for their repair.

14. Miscellaneous Work - (Continued)

f. Minor Design

(3) The low-level packing hood monitor was recalibrated, using an aluminum absorber over the window to cut out beta radiation and allow readings to be made only on Bremsstralung rays.

(4) Bottle capper inserts were redesigned to give more positive closure on 15-ml. bottles. A special washer is being made for securing capper shields.

(5) Packing turntable inserts and a tray for 50-ml. bottles were designed and are being made.

(6) Zinc bromide windows made of Lucite were made and installed in the low-level packing hood.

(7) Two product bottle carriers and dolly were inspected and approved.

g. U-235 Recovery from Waste

Seventy-five gallons of laboratory waste containing minute amounts of U-235 were examined to determine feasibility of recovery of the uranium. Equipment has been set up in Building 908 for solvent recovery of U-235 from more concentrated U-235 wastes contaminated with fission products.

II. Tank Farm and Burial Ground:

1. General

a. The project to install three underground stainless steel tanks in the North Tank Farm for the CR process is about 90% completed. The only thing remaining is the tie-in with the ruthenium equipment in the South Tank Farm.

[redacted]

II. Tank Farm and Burial Ground: - (Continued)

1. General

a. During the testing of the lines from Building 205 to the new tank installation, a bad leak was discovered in the old nest of valves in the North Tank Farm.

In order to prevent holding up the Pilot Plant operation, repair work was done over the weekend on an emergency basis. The work was started in the late afternoon on Friday, March 24, 1950, and was completed, except for covering up the hole, on Sunday night, March 26, 1950. Because the original installation was completely covered with earth and not enclosed in the usual valve pit, the earth around the leak became so contaminated that it was impossible to get enough working time to make repairs by any direct approach. All lines leading to the valve assembly were cut at least ten feet away from the leak and the entire assembly was pulled out and buried. The lines were then rerouted so that the new replacement valves were placed into an existing valve pit. If any leaks occur in the future, the repairs can then be made with a great deal less difficulty.

b. The transfer line from W-5 to the evaporator has been completely covered with a half inch of lead.

2. Wastes Discharged to the White Oak Creek

About 7.87 curies of beta activity were discharged from the Settling Basin this month.

[redacted]

2. Wastes Discharged to the White Oak Creek - (Continued)

A rise in activity discharged at the end of the month is attributed to the fact that a large quantity of contaminated water was pumped directly to the Settling Basin from the hole dug for repairs to the pipe lines in the North Tank Farm.

ACTIVITY DISCHARGED TO WHITE OAK CREEK

	FEBRUARY, 1950		MARCH, 1950	
Discharged From	Gallons	Beta Curies	Gallons	Beta Curies
Settling Basin	18,998,000	11.02*	23,125,000	7.87*
Retention Pond	388,000	.17	452,199	.32
TOTAL		11.19*		8.19*
* Contributed by Evaporator		.78		.94

3. Chemical Waste Evaporator

About 18,000 gallons of evaporator concentrate supernate from W-8 were jetted to W-5 during the last week of the month. This was done to further reduce the volume of the evaporator concentrate. This, added to the feed solution, adversely affected the operation of the evaporator to the extent of lowering the average decontamination factor for that week.

An average decontamination factor of 1,103 was obtained for the month.

WASTE EVAPORATOR OPERATION

Gallons Fed to Evaporator	Gallons of Concentrate to W-6	Volume Reduction	Beta Curies to Evaporator	Beta Curies to Settling Basin
MAR.-229,245 gals.	25,247	8.1:1	1,034.10	.94
FEB.-246,757 gals.	19,407	11.7:1	2,189.13	.78

4. Waste Tank Inventory

Tanks	Gallons Capacity	Gallons In	Gallons Out	Discharged To	Free Space
		HOT PILOT PLANT STORAGE			
W-3	41,300	-0-	-0-	---	3,848
		CHEMICAL WASTE STORAGE			
W-5	170,000	214,845	229,245	Evaporator	67,200
		EVAPORATOR CONCENTRATE STORAGE			
W-6,8	340,000	8,400	18,000	Evaporator	96,000
		METAL WASTE STORAGE			
W-4,7,9,10	543,000	14,148	43,200	Evaporator	141,848

5. Special Wastes

a. Two Dayton shipments were buried.

b. A total of 265,359.87 grams of uranium were received into the Metal Waste System this month. Of this, RaLa transferred 132,420.87 grams; the Chemical Technology Division, 125,834 grams; and the Chemistry Division, 7,105 grams.

c. About 43,200 gallons of precipitated metal supernate from W-7 were transferred to W-5. This contained an average of .0045% uranium. After this material was jetted from W-7, 11,248 gallons of uranium from W-4 and 49,200 gallons from W-9 were jetted to W-7 tank, and a total of 4,725 gallons of 50% liquid caustic added to precipitate the uranium.

d. One pot and six drums were received from Chicago.

III. RaLa (Ba^{140} - 12.5d):

After the cell ventilation system tie-in was made to the 900 Area stack, the former 706-D cell ventilation filter box was removed, decontaminated, and given to the Chemical Technology Division for use in one of their buildings. The filters were inspected as well as possible considering that the radiation levels ranged upward to 5 R/hr; they were found to be in good condition.

RaLa Run #40 was started on March 13, 1950, one day late, due to transportation delays. Seventy-three, four-inch Hanford slugs were dissolved and extracted in two batches.

This was the first RaLa run produced during which the cell ventilation system was connected to the new 900 Area exhaust stack. Minor increases in the normal air count occurred in two instances but neither was of any consequence. It appears that this air contamination was caused by a leakage around the A-16 blower which will be eliminated when the new off-gas line installation is completed.

The glassware procedure was very slow and took about fourteen hours for completion due to a large amount of foreign matter which came into the reactor from the transfer lines.

L.S.T. was reached at 12:10 p.m. on March 17, 1950. The product was shipped at 12:15 a.m. on March 18, 1950, as a nitrate with a content of 3,440 curies as determined by a ten-hour skyshine measurement of 32.5 R/hr.

III. RaLa (Ba^{140} - 12.5d): - (Continued)

The analytical summary of the run follows:

Slugs Loaded: 73 Hanford Slugs
Slugs Dissolved: 79 Hanford Slugs (Includes two, eight-inch "cold" slugs loaded to check chute clearance following slug jam during Run #39.)

	CURIES	PERCENT
Total Curies Dissolved	5,784	100.0
Cell A Losses	1,596	27.6
Cell B Losses	390	6.7
Losses Accounted For	1,986	34.3
Material Balance through B-6		88.8
Product Shipped (Skyshine)	3,440	59.6
Material Balance through Skyshine		93.8
Losses Unaccounted For		6.2

Los Alamos reported the quantity and quality of this run as being very satisfactory. The next run is scheduled to begin on April 8, 1950.

A change was made from past procedure in the neutralization of metal waste by the elimination of tri-sodium phosphate from the neutralizing solutions. This change was made at the request of the Chemical Technology Division because it was found that T.S.P. interferes with the recovery of metal from the metal waste storage system.

The Trion precipitators on the cell ventilation duct were put in operation by the M.I.T. graduate students. The results of their experiments will be published in a separate report. It is known that the Trions do remove at least a portion of the active particles from the air stream and that they can be decontaminated.

A new evacuation signal powered by a six-volt battery system has been installed in Building 706-D. This system should prevent any alarm failure due to breakdown of other Laboratory electrical systems.

A new glass reactor will have to be installed in the cubicles before RaLa Run #41 can be made.

C. RADIOISOTOPE CONTROL DEPARTMENT

I. General:

During March, 1950, there were 662 radioisotope shipments, compared with 548 during February and 633 during January. This represents a new record for any month. By comparison, in March, 1949, there were 514 shipments.

The breakdown according to separated and unseparated material is as follows:

	MARCH 1949	FEBRUARY 1950	MARCH 1950	August, 1946, to March, 1950, Inc.
Separated Material 706-D Area	399	428	476	10,163
Unseparated Material 100 Area	115	120	186	3,032
	514	548	662	13,195

The following table indicates the breakdown between non-project, project, and foreign orders for March, 1949, and February and March, 1950:

	MARCH 1949	FEBRUARY 1950	MARCH 1950
Non-Project	392	436	525
Project	85	94	120
Foreign	37	18	17

II. Hanford Irradiations:

The following materials were due to have been discharged in Hanford during March, 1950. Information from Hanford indicates that these samples will be shipped by rail express on April 4, 1950.

2 Pcs. Potassium Chloride
1 Pc. Antimony
1 Pc. Titanium
1 Pc. Tungsten
1 Pc. Cadmium
1 Pc. Calcium Carbonate
1 Pc. Fe 58 Enriched

II. Hanford Irradiations: - (Continued)

Efforts are being made to have material shipped by rail express or motor freight within a few days after discharge. This will prevent excessive loss by decay. A long-range irradiation program is well underway for producing radioisotopes at Hanford with the charge and discharge dates scheduled, in most cases, a year in advance. Very good cooperation has been obtained and it appears that we will be able to produce most of the long-lived radioisotopes with fairly high specific activity. Short-lived radioisotopes, however, cannot be prepared at Hanford because of shipping time.

III. Cyclotron Isotopes:

Following is a list of the outstanding orders for cyclotron isotopes now on hand:

Be 7 - 30 mc.
Na 22 - 1.640 mc.
Fe 59 - 3.00 mc.
Zn 65 - 1.00 mc.
As 73 - 11.00 mc.
I 125 - .50 mc.

BOMBARDMENTS RECEIVED

	M.I.T.		CALIFORNIA		PITTSBURGH		WASHINGTON U.	
	Bombardments	Beam Hours	Bombardments	Beam Hours	Bombardments	Beam Hours	Bombardments	Beam Hours
Be^{7}					4	160.00		
Na^{22}	1	109.75			5	201.75	4	300.00
Zn^{65}	1	100.00						
Co^{57}							2	50.00
Mn^{54}							1	50.00
Fe^{59}			2	76.50*				
I^{125}							1	10.00
TOTAL RECEIVED	2	209.75	2	76.50	9	361.75	8	410.00

* One 40-hr. bombardment shipped directly to Washington University 1-20-50.

III. Cyclotron Isotopes: - (Continued)

REQUESTED BUT NOT RECEIVED

	M.I.T.		CALIFORNIA		PITTSBURGH		WASHINGTON U.	
	Bombard-ments	Beam Hours	Bombard-ments	Beam Hours	Bombard-ments	Beam Hours	Bombard-ments	Beam Hours
Mn^{52}					1	10.00		
Fe^{59}			1	120.00				
Zn^{65}			1	40.00				
As^{73}					1	10.00		
I^{125}							1	50.00
TOTAL HOURS OUTSTANDING (Not received or requested)		540.25		513.50		368.25		290.00

SHIPMENTS OF CYCLOTRON PROCESSED ISOTOPES

Be^{7} - 34.873 mc.

Na^{22} - 9.32 mc.

Since the outstanding purchase orders for cyclotron bombardments were originally expected to be complete by June 30, 1950, each of the four institutions doing bombardments have been asked how much of the unexpended bombardment time must be completed by this date. Tentative arrangements are as follows:

1. M.I.T. and University of Pittsburgh

   It will be satisfactory to carry over all unused beam hours to 1951 fiscal year.

2. Washington University

   Approximately 150 beam hours over and above that already requested will be completed by June 30, 1950, to discharge additional financial obligations incurred as a result of accepting extra work for ORNL. [redacted]

III. Cyclotron Isotopes: - (Continued)

3. University of California

It will be necessary for additional 200 beam hours to be completed by June 30, 1950. This is in addition to the cyclotron time already used or scheduled.

Letters will be written to each of these institutions to confirm these arrangements.

IV. Activation Analyses:

At present there are the following samples on hand which are being used by the Chemistry Division to develop activation analytical procedures:

1. Bentonite submitted by the California Research Corporation December 2, 1949. Analysis was requested to determine if a long-lived activity exists which would be suitable for making radiographs of bentonite mud penetration in different strata.

Present Status: Analysis was completed and report submitted on March 9, 1950. Activities of Fe^{59} and P^{32} were identified as shown on the following table:

Activity Expressed in Disintegrations/Sec/Gm at Pile Discharge Time

a. Beta Components (Fe^{59} and P^{32} only) - by G/M counting.

	Fe^{59}	P^{32}
Clay #1	7.5×10^4 d/s/gm	1.3×10^5 d/s/gm
Clay #2	1.4×10^5 d/s/gm	2.3×10^5 d/s/gm
Clay #3	1.4×10^5 d/s/gm	1.5×10^5 d/s/gm

b. Gamma Components (Fe^{59} only) - by ion chamber measurements.

Clay #1	7.0×10^4 d/s/gm
Clay #2	1.5×10^5 d/s/gm
Clay #3	1.3×10^5 d/s/gm

IV. Activation Analyses: - (Continued)

2. Vinylite Resins submitted by Carbide and Carbon Chemicals Corporation, UCC, November 25, 1949. One set of these samples was submitted for analysis of cadmium and other trace metals and one set for iron and other trace metals.

   Present Status: It has been found necessary to ash the samples before activation to avoid the large amount of chlorine activity generated by neutron bombardment. The samples of the iron group have been bombarded for three weeks, discharged on March 27,1950, and are now being cooled in preparation for separation during the week of April 10, 1950. The cadmium group has been prepared for bombardment.

3. Magnesium Metal Alloys submitted by the Dow Chemical Company, December 22, 1949, for analysis for trace elements.

   Present Status: Long-term bombardment has been completed. Samples now being separated for identification for long-lived activities. One activity has been identified as being cadmium. A short bombardment is being prepared and will probably be done next week for identification of short-lived activity.

4. Stainless Steel, Ni-Cr-Mo-W-Alloy, and Ferrous Material submitted by Carbide and Carbon Chemicals Corporation, UCC, Niagara Falls, New York, February 13, 1950.

   Present Status: Samples have been prepared for bombardment and the procedures worked out for quick separations so that the short-lived activities can be identified.

[redacted]

V. Biological Irradiations:

The first request for irradiation of biological material has been received from the University of Texas. This irradiation involved exposing tomato root tips in the pile and also the transfer from a glass container to aluminum or quartz under asceptic conditions. Since this would have required the services of a trained biologist, the requester was informed that he would have to furnish the material already packaged in quartz or aluminum.

VI. New Radioisotope Requirements:

1. Br^{82} ($T\frac{1}{2}$ = 34 hrs.) for Brookhaven National Laboratory

Two shipments of one curie each and one shipment of ten curies have been requested by Brookhaven for use in the civilian defense training program during April, 1950. This material will be shipped by plane if possible and will be the largest radioisotope shipment to be sent by plane so far.

2. Cesium 137, Sodium 24, and Europium 155 for Los Alamos

Ten curies each of Casium 137 and Sodium 24 have been requested by Los Alamos along with one curie of Europium 155. Of these, only the cesium can be produced in sufficiently high specific activity and quantity. The Sodium 24 will have too low specific activity (because of the low flux of the X-10 pile) to be useful. Europium 155 cannot be produced in large enough quantity from fission products according to our present experience to make one curie. If a higher-flux pile were available, it might be produced from irradiated samarium.

[redacted]

VI. New Radioisotope Requirements: - (Continued)

3. Ohio X-Ray Corporation's Requirement for X-Ray Source

A representative of the Ohio X-Ray Corporation visited the Laboratory the week of March 26, 1950, to inquire about the availability of sources of X-ray for use in X-ray spectrometers. It appears that if a sufficiently high specific activity source of Fe^{55} were available, this could be used in place of costly X-ray tubes and would also eliminate expensive power supplies. Efforts are being made to make a suitable source, but the specific activity of the Fe^{55} appears to be the limiting factor. Since this radioisotope was made by irradiation of enriched Fe^{54} at Hanford, it will be impossible to produce higher specific activity material until a high flux pile is available or irradiation can be performed at Chalk River.

Logan B. Emlet
Logan B. Emlet, Director
Operations Division

wp

VII. S-F Material Control:

1. The quarterly SF survey referred to in last month's report was completed on March 3, 1950. The survey group indicated that the Laboratory had effected practically all of the major recommendations advanced in prior surveys, with few exceptions. It was pointed out that most of the exceptions would be taken care of in Program "H" construction, particularly the installation of process hold-up tanks. The survey group indicated that other minor exceptions were under study for possible cancellation in line with the intent of a letter from Mr. S. R. Saparie to Mr. C. E. Center, dated November 10, 1940; subj: Proposed Changes in SF Material Accounting Procedures.

   Apparently the findings were satisfactory; however, an official report has not as yet been received.

2. Steps have been taken to follow through on an Atomic Energy Commission recommendation which was made several months ago; namely, the application of limits of errors to SF material balances. As a starting point, a letter has been sent to possessors of SF materials requesting that the precision of each inventory, by material type, be reflected on their reports. It was explained that limits of errors would generally be compounded from three sources; i.e., errors in weight determination equalling $\pm a\%$, errors in analysis equalling $\pm b\%$, errors in isotope assay equalling $\pm c\%$. The resulting limit of error precision percentage equals the square root of $a^2 + b^2 + c^2$; i.e., $P\% = \sqrt{a^2 + b^2 + c^2}$.

VII. S-F Material Control: - (Continued)

2. In initiating this plan, it is believed that a two-fold purpose can be accomplished: (a) Establish and evolve a table of statistics on limits of error for the entire Laboratory; (b) Fulfill the request of the Atomic Energy Commission in this regard.

3. Two carload lot shipments were received during the month. One lot came from Chalk River, Canada, and another from Hanford. The Chalk River lot, received March 6, 1950, consisted of fifty-four pieces of highly-irradiated uranium. This is the fourth shipment out of a scheduled series of five which raises the number of pieces received to 208; thus, fifty-two pieces are still outstanding on our requisition.

   The Hanford car was received on March 12, 1950, and contained seventy-six slugs for the RaLa process.

4. The balance of regular process batches from the U^{235} recovery program (Hot Pilot Plant operation) was forwarded to Y-12 on March 3, 1950. Recovery is still in progress on process sample and accrued waste solutions. It is expected that all recovery work will be completed by May 15, 1950.

   In addition to the above, a shipment of scrap enriched uranium was made to Y-12 on March 17, 1950. The material was estimated to contain 1,449 grams of uranium enriched with 738 grams of U^{235} and represented an accrual of scrap from various research work.

5. During the month, the analysis records of two analytical laboratories were checked. The audit reflected that records were in good order and no irregularities appeared to exist.

VII. S-F Material Control: - (Continued)

6. Following is a summary of shipments and receipts of SF materials for the month of March, 1950:

SHIPMENTS

TO	MATERIAL	CONTENT
Argonne National Laboratory	Irradiated Source Material	Negligible
" " "	Irradiated UO_3 (normal)	1.65 gm.
" " "	Hot X Slugs (depleted)	9,328.00 gm.
		.10 gm. Pu
" " "	U-Al-Alloy (normal)	640.70 gm.
" " "	Irradiated X Slugs (depleted)	13,992.00 gm.
		0.13 gm. Pu
AEC, ORO	Depleted Uranium	204.60 gm.
C&CCC, Y-12 Area	Enriched Uranium (93.5%)	588.97 gm.
" " "	U-233	0.558 gm.
" " "	U-233	0.2030 gm.
" " "	Enriched Uranium (93.5%)	65.181 gm.
" " "	Enriched Uranium	1,449.10 gm.
" " "	Enriched Uranium (93.5%)	83.844 gm.
" " "	U-233	.2046 gm.
General Electric Company	Irradiated X Slugs (depleted)	100.00 gm.
		.0009 gm.Pu
" " "	$PUO_2(NO_3)_2$	0.511 gm. Pu
Tracerlab, Incorporated	U_3O_8 (normal)	0.76 gm.

VII. S-F Material Control: - (Continued)

6.

RECEIPTS

FROM	MATERIAL	CONTENT
Argonne National Laboratory	Waste Solution (depleted)	30,380.00 gm. 279.90 mg. Pu
" " "	High Purity Uranium Metal (normal)	15.00 gm.
" " "	Irradiated U Slugs (depleted)	33,814.00 gm. 0.55 gm. Pu
" " "	Uranium Metal (normal)	10.00 gm.
Chalk River	Depleted Uranium	195,950.80 gm. 191.10 gm. Pu
C&CCC, Y-12 Area	Nickel Tubing Plated with Enhanced Uranium (enriched)	.17 gm.
" " "	Metal Disc (enriched)	348.29 gm.
" " "	Nitrate (normal)	168,103.50 gm.
" " "	U_3O_8 (enriched)	3.40 gm.
Hanford Engineer Works	Irradiated Slugs (depleted)	135,133.54 gm. 27.90 gm. Pu
" " "	Canned Uranium Slugs (normal)	88,903.64 gm.
" " "	Plutonium Discs	Nil
New Brunswick Lab.	Thorium	0.6035 gm.
Tracerlab, Incorporated	U_3O_8 (normal)	.5085 gm.