CENTRAL RESEARCH LIBRARY
DOCUMENT COLLECTION

[redacted]

ORNL 686
Progress Report

DECLASSIFIED
CENTRAL RESEARCH LIBRARY
DOCUMENT COLLECTION

CLASSIFICATION CHANGED TO:
BY AUTHORITY OF: TID-1116
BY: N Johnstone 10-23-56

MARTIN MARIETTA ENERGY SYSTEMS LIBRARIES
3 4456 0360507 0

LABORATORY 1954

ADI 53

CHEMISTRY DIVISION
QUARTERLY PROGRESS REPORT
FOR PERIOD ENDING MARCH 31,1950

PART II. ANALYTICAL CHEMISTRY

CENTRAL RESEARCH LIBRARY
DOCUMENT COLLECTION

LIBRARY LOAN COPY

DO NOT TRANSFER TO ANOTHER PERSON

If you wish someone else to see this document, send in name with document and the library will arrange a loan.

OAK RIDGE NATIONAL LABORATORY
OPERATED BY
CARBIDE AND CARBON CHEMICALS DIVISION
UNION CARBIDE AND CARBON CORPORATION
UCC
POST OFFICE BOX P
OAK RIDGE, TENNESSEE

[redacted]

[redacted]

ORNL 686

This document consists of 52 pages. Copy 7 of 103, Series A.

Contract No. W-7405, eng. 26

CHEMISTRY DIVISION

J. A. Swartout, Director
G. E. Boyd, E. H. Taylor, Associate Director
M. T. Kelley, Assistant Director

QUARTERLY PROGRESS REPORT

for Period Ending March 31, 1950

PART II

ANALYTICAL CHEMISTRY

DATE ISSUED
MAY 18 1950

OAK RIDGE NATIONAL LABORATORY
Operated by
CARBIDE AND CARBON CHEMICALS DIVISION
Union Carbide and Carbon Corporation
Post Office Box P
Oak Ridge, Tennessee

[redacted]

MARTIN MARIETTA ENERGY SYSTEMS LIBRARIES
3 4456 0360507 0

[redacted]

TABLE OF CONTENTS

ABSTRACT 6

PROJECT LITERATURE AND PUBLICATIONS 8

IONIC ANALYSES—RESEARCH AND DEVELOPMENT 9

- Automatic micro titrations 9
- Tentative colorimetric method for the determination of fluorides 13
- Colorimetric method for the estimation of chromium^{+6} and chromium^{+3} 16
- Indirect polarographic determination of sulfates 18
- Polarography with alternately polarized platinum microelectrodes 19
- Polarographic determination of cadmium in cadmium contaminated aluminum 21
- Polarographic determination of uranium in plutonium solutions 21
- Determination of the accuracy of the polarographic method for uranium analysis in the 25 process feed solutions 23
- A polarograph for analysis of very dilute solutions (10^{-6} *M*) 24
- Using the curve follower in the determination of the low concentrations of lead and iron in ammonium oxalate 30
- Determination of lead and iron in radioactive barium preparations 32

RADIOCHEMICAL ANALYSES—RESEARCH AND DEVELOPMENT 35

- Activation analysis 35
- Radioisotope target materials 38
- Assay of various radioisotopes 44
- Analyses for transuranic elements 45
- Identification scheme for radioelements 45
- Application of ion exchange to radiochemical analysis 45

Miscellaneous Activities 46

- Decontamination studies 46
- Preparation of Cockroft-Walton targets 46
- Search for Zr^{88} 46
- Flux determination by use of uranium foils 48

SPECTROCHEMICAL ANALYSES—RESEARCH AND DEVELOPMENT 49

ANALYTICAL SERVICE 50

[redacted]

[redacted]

LIST OF TABLES

		Page
I	Colorimetric Analysis of Sodium Fluoride Solutions	14
II	Colorimetric Estimation of Cr^{+3} Oxidized with $NaBiO_3$	17
III	Analysis of Mixtures of Cr^{+6} and Cr^{+3}	17
IV	Analysis of a Synthetic IAW Raffinate	18
V	Results of Determination of Cadmium and Aluminum	22
VI	Variation of Diffusion Current with Concentration for Very Dilute Solutions of Iron	34
VII	Variation of Diffusion Current with Concentration for Very Dilute Solutions of Lead	34
VIII	Sensitivities of Activation Analysis (ORNL Reactor - n,γ Reactions)	39
IX	Summary of Service Analytical Work	52

[redacted]

[redacted]

LIST OF FIGURES

Figure 1	Positive Feed Micro Burette	11
Figure 2	Positive Feed Micro Burette	12
Figure 3	Fluoride Calibration Curve	15
Figure 4	ORNL Polarograph Polarizing Unit	26
Figure 5	Block Diagram of "Curve Follower"	28
Figure 6	Circuit Diagram for "Curve Follower" Q983	29
Figure 7	Polarograms of Iron and Lead in 0.01 *M* Oxalic Acid, 0.1 *M* Ammonium Ace ate, 0.1 *M* Acetic Acid Using the "Curve Follower"	31
Figure 8	Elution Curve 0.1 N HCl Activity Measured on High Pressure Ionization Chamber - Elution Curve 0.1 *N* HCl Beta Activity	47

[redacted]

[redacted]

ABSTRACT

Starting with this issue the quarterly progress report of the research, development, and service work in analytical chemistry will be separated from that of the rest of the Chemistry Division and will be issued as a separate report. Reference is made to ORNL 685 for Part I, Research, for this period.

Ionic Analyses—Research and Development. The work on ionic analyses is largely related to problems arising from the chemical technology program. Considerable emphasis continues to be placed on polarography because of the adaptability of this method to analysis of radioactive material with a minimum of manipulations.

Development of a new positive-feed micro-buret, which is to be used for micro-titrations with the automatic titrator, is reported. A colorimetric method for fluoride based on the use of "Thoron" is described. A colorimetric method for Cr^{+6} and Cr^{+3} in Redox wastes has been tested.

An indirect method for sulfate based on reduction to sulfide, precipitation of CdS, and polarography of Cd has been tried. A polarographic method has been used to determine Cd contamination on pile assemblies wrapped in Cd foil during storage. The polarograph was also used for determining uranium in solutions containing macro amounts of plutonium.

Further work on the polarography of very dilute solutions is reported, including a description of the instrument used, a new technique for residual current correction, and diffusion current curves for iron and lead down to 10^{-6} molar concentrations.

Radiochemical Analyses—Research and Development. The emphasis here is mostly on activation analyses and on assay methods for isotopes to be produced by the Production Division.

Activation analyses are being attempted on Vinylite samples for iron, cadmium, and other metals. Other samples are being studied to identify the activities produced by neutron activation including bentonite samples, magnesium alloys, and various iron and chromium alloys. The activation technique was also used to determine the cesium content of a Rb_2CO_3 sample to be used in the

[redacted]

production of Rb^{86}. The Cs^{134} activity was separated by means of a cation exchange column. A table of sensitivities for various elements by neutron activation analysis has been prepared and is included in this report.

Assay methods were developed for several isotopes now being produced by ORNL including Fe^{59} and Cr^{51}. Work is also in progress on an identification scheme for radioelements which will be of use in examining such samples.

Other work in this group includes further work on Np and Pu procedures, work on use of uranium foils for flux determination, and studies of decontamination of surfaces.

Spectrochemical Analyses—Research and Development. Because of a lack of personnel, equipment, and space, effort in this field is limited mostly to developing working curves for elements requested by various divisions. Such curves were developed this quarter for gallium and germanium in sulfuric acid solutions of copper, and for lead in perchloric acid solutions.

Analytical Service. Analytical service work has increased considerably in this quarter with a total of 34,909 analyses performed. In two fields, the analysis of corrosion solutions and spectrochemical analysis of metals and alloys, it has not been found possible with the present personnel and equipment to handle all the analyses considered desirable.

PROJECT LITERATURE AND PUBLICATIONS

Project Literature Issued by the Analytical Section of the Chemistry Division

September, 1949 — March, 1950

ORNL 599 *Estimation of Tributyl Phosphate (TBP) In Mixtures of TBP-Varsol*, M. T. Kelley, P. F. Thomason, A. D. Horton, and J. L. Horton.

ORNL 475 *The Spectrochemical Analysis of Radioactive Solutions*, C. Feldman, M. V. Hawkins, Marvin Murray, D. R. Ward.

Papers Published by Members of the Analytical Section of the Chemistry Division

September, 1949 — March, 1950

1. "Determination of Microgram Amounts of Thorium," *Anal. Chem.* **21**, 1239 (October, 1949), P. F. Thomason, M. A. Perry, and W. M. Byerly.
2. "Spectrographic Determination of Hf-Zr Ratios," *Anal. Chem.* **21**, 1211 (October, 1949), C. Feldman.
3. "Note on the Arc Spectrum of Element 61," *Am. Chem. Soc. J.* 71, 3841 (Nov., 1949), C. Feldman.

IONIC ANALYSES—RESEARCH AND DEVELOPMENT

Automatic Micro Titrations (F. J. Miller). Work has been continued on semi-micro and micro methods for potentiometric titrations using the automatic titrator with a view toward determining small amounts of uranium and plutonium. The apparatus and equipment appear satisfactory with the exception of the stirrer. No completely satisfactory stirring mechanism for oxidation-reduction titrations has been developed.

The procedure which is similar to the HEW method[1] consists of fuming the plutonium sample with sulfuric acid to destroy nitrates, reducing the plutonium with chromous ion, and titrating with ceric sulfate. Two breaks are obtained, the first denoting completion of the oxidation of the excess chromous ion, the second, the oxidation of the plutonium. The volume of ceric sulfate consumed between the two breaks is a measure of the plutonium present. The titration is carried out at room temperature under an inert atmosphere of nitrogen.

A bright platinum electrode is placed in the solution to be titrated. Another bright platinum electrode is placed in the barrel of the burette. The potential between these electrodes and the volume of titrant delivered are recorded automatically by the titrating instrument.

The apparatus consists of the automatic titrator previously described,[2] a new positive feed micro-burette which is directly coupled to the titrator, a titrating vessel, and magnetic stirrer.

The micro-burette was designed and fabricated at ORNL for use either in conjunction with the titrator or separately. It consists of a micrometer screw driving a platinum plunger through a teflon grommet into a teflon chamber. The plunger is so constructed that when it is retracted to a certain point a valve is opened. The burette chamber and delivery tip may then be filled with liquid by suction. When the plunger is moved forward, the valve is closed. The plunger is in direct contact with the liquid and any further forward motion into the chamber must displace an equivalent amount of liquid

---

(1) *HEW Laboratory Manual 231 Methods Section*, Code PSP-1A (Dec., 1945).

(2) Miller, F. J. and Thomason, P. F., "Precision Dow RecordomaticTitrator," *Chemistry Division Quarterly Report for the Months December 1948, January and February, 1949*, ORNL 336, 110 (May 4, 1949).

from the burette tip. The teflon grommet provides an excellent seal, preventing any escape of the liquid, yet permitting an easy movement of the plunger. The total delivery capacity of the burette is 50 λ. A photograph and diagram of the burette are shown in Figs. 1 and 2.

It was intended to use magnetic stirring by sealing a small piece of iron wire in glass for the stirring bar. Unexpected difficulties were encountered. It became apparent that many of the stirrers were not perfectly sealed, permitting the iron to dissolve into the solution. An attempt was made to find a better covering material. Plastic coverings of teflon, polystyrene, fluorothene, and Castolite were used. These were all found unsatisfactory. Due to the thinness of the sheath required, the first three were porous and the last reacted with the sulfuric acid medium. Further attempts to make a suitable stirrer depend upon gold plating or depositing some other inert and impermeable coating upon the iron wire. Glass covered stirrers which operate successfully have been made by double sealing of the wire in glass, but it is most necessary to pretest these. Pulse stirring using a wire stirrer seems impracticable because of the nature of the titrating vessel.

Since it is necessary to fume the sample in a closed system which could be placed in a hood, an apparatus similar to the Hanford "teakettle"[3] was made. It consists of the titrating vessel, with an inlet for gas and a vacuum outlet leading through two glass wool traps and a sulfuric acid bubbler. The titrating vessel can be stoppered with a ground glass stopper. Nitrogen is then let in and drawn off through the filters to the vacuum line. The heater consists of a nichrome spiral enclosed in mica. This is controlled by a Variac and is capable of supplying the large amount of heat necessary to fume the sample without overheating.

The procedure has been to fume the sample, cool and dilute with water to ~1 ml. The electrode assembly, stirrer and burette tip are then immersed in the solution. A saturated solution of potassium chromium sulfate in 10% sulfuric is passed through the Jones reductor. Two hundred λ of chromous solution is then added by means of a micro pipette to a sample and the titration started. The platinum electrode is washed, polished and flamed between each titration.

---

(3) Curtis, R. E., *Remote Control Analytical Apparatus*, (Hanford Engineer Works), M-3409, 92 (Jan. 31, 1947).

NOT CLASSIFIED
PHOTO 6314

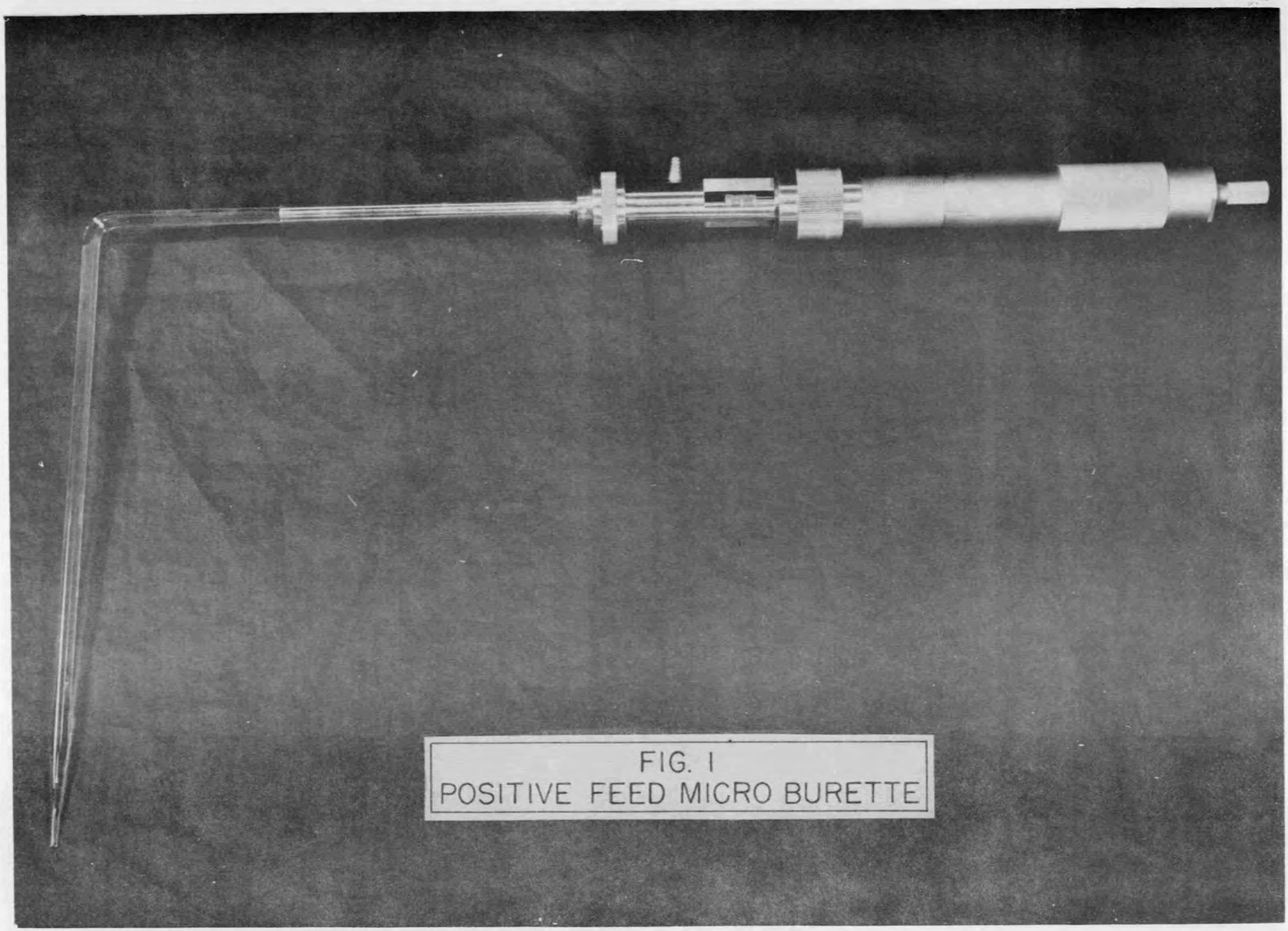

FIG. 1
POSITIVE FEED MICRO BURETTE

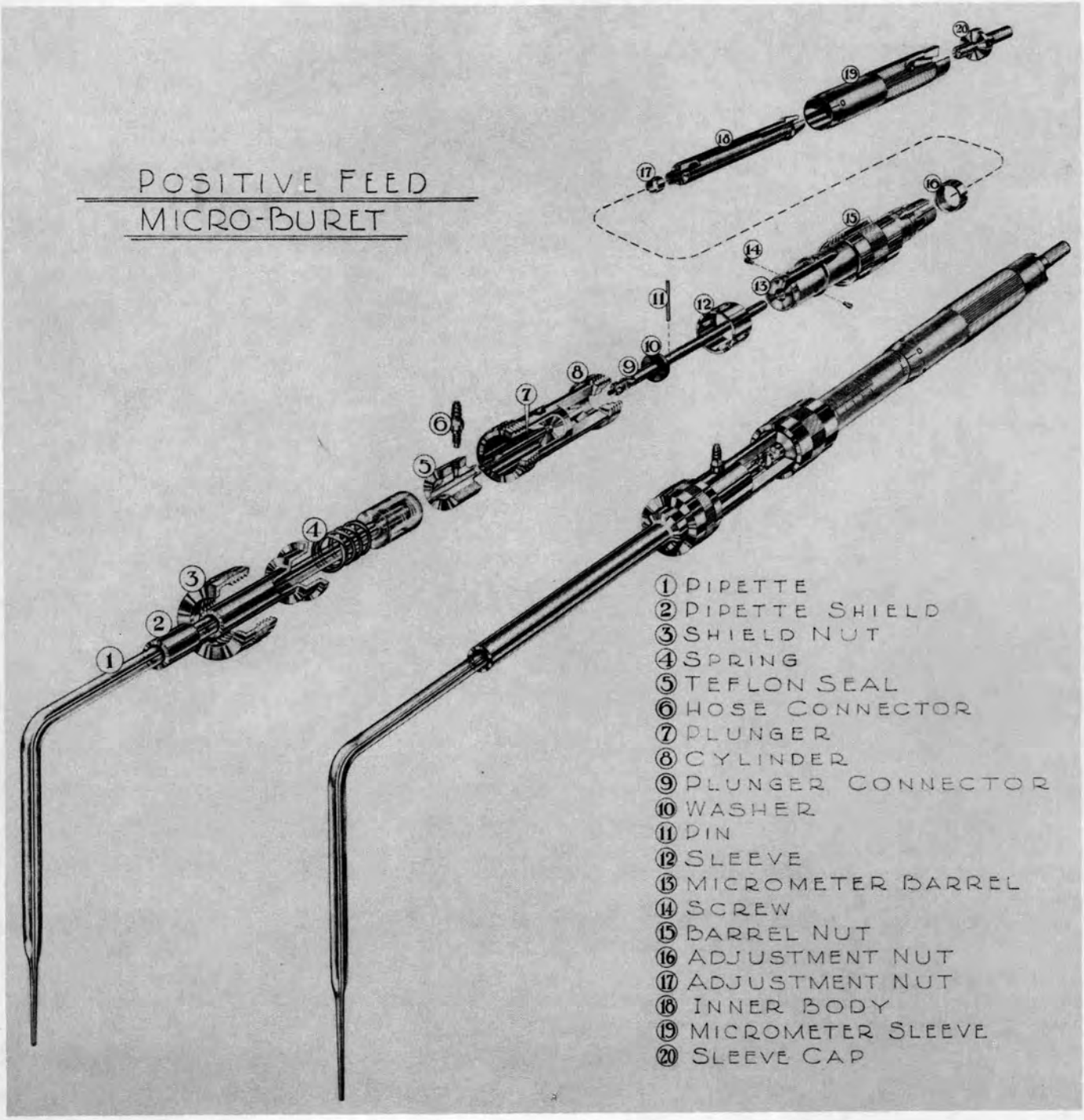
POSITIVE FEED
MICRO-BURET
1 PIPETTE
2 PIPETTE SHIELD
3 SHIELD NUT
4 SPRING
5 TEFLON SEAL
6 HOSE CONNECTOR
7 PLUNGER
8 CYLINDER
9 PLUNGER CONNECTOR
10 WASHER
11 PIN
12 SLEEVE
13 MICROMETER BARREL
14 SCREW
15 BARREL NUT
16 ADJUSTMENT NUT
17 ADJUSTMENT NUT
18 INNER BODY
19 MICROMETER SLEEVE
20 SLEEVE CAP

Results to date have been somewhat erratic. The variation has been attributed to poorly sealed stirrers, varying *p*H and volume of solution. It is believed that with an improved stirrer and closer control of conditions the method which has been demonstrated to work on a larger scale can be successfully extended into the micro range.

Tentative Colorimetric Method for the Determination of Fluorides (P. F. Thomason and F. J. Miller). The volumetric method of Willard and Winter[4] is probably the most widely used procedure for the determination of fluorides. Recently Willard and Horton[5] made a thorough study of indicators for the titration of fluorides with thorium solutions. They have developed an excellent photofluorometric titration method using quercetin as a fluorescent indicator and thorium nitrate as the titrant. This method is useful in the range of 0.1 to 40 mg of fluoride. A colorimetric method by D. Monnier[6] *et al.*, based on the diminution of the color obtained with ferric ion and 5-sulfosalicylic acid, has been used to determine 0.2 to 1 mg of fluoride. However, a method suitable for the range of 0.005 to 0.050 mg of fluoride would be most welcome especially for water analyses. It has been reported that small amounts of fluoride ion interfere with the colorimetric thorium method.[7] Preliminary investigation has shown that the diminution of the thorium-"thoron" color by the fluoride ion may be made the basis for a colorimetric estimation of fluoride. Only solutions containing pure NaF have been tested by the following procedure:

REAGENTS AND APPARATUS:

1. Standard thorium solution (80 γ Th/ml) made by dilution from a standardized thorium nitrate solution containing 10 mg Th/ml.

2. 0.2% "thoron" solution made by dissolving 200 mg of the 1-(o-arsonophenylazo)-2-naphthol-3,6 disulfonic acid reagent in water.

3. Standard NaF solution (10 γ F/ml) made by dissolving 0.2221 g of pure NaF in 100 ml of water. 1 ml = 100 γ F. Dilute this solution 1:10.

4. Beckman spectrophotometer.

---

(4) Willard, H. H. and Winter, O. B., "Volumetric Method for Determination of Fluorine," *Ind. and Eng. Chem. Anal.* 5, 7-10 (1933).

(5) Willard, H. H. and Horton, C. A., "Indicators for Titration of Fluorides with Thorium," *Anal. Chem.*, In Press.

(6) Monnier, D., Rusconi, Y., and Wenger, P., "Un dosage colorimetrique des fluorures," *Helv. Chim. Acta* 29, 521-5 (1946).

(7) Thomason, P. F., Perry, M. A., and Byerly, W. M., "Determination of Microgram Amounts of Thorium," *Anal. Chem.* 21, 1239 (1949).

PROCEDURE:

1. Pipette 80 γ of Th into a 10 ml volumetric flask.
2. Add the sample containing 5-50 γ of fluoride ion.
3. Add 5 drops of conc HCl.
4. Add 250 λ of 0.2% "thoron" solution.
5. Dilute to 10 ml with distilled water.
6. Mix well and read at 545 mμ in the spectrophotometer versus a reference containing only HCl, and "thoron."
7. Obtain the fluoride value from a standard curve.

A standard calibration curve is made by following the procedure using the standard fluoride solution and plotting the transmittance values on semi-logarithmic paper. A standard curve is shown in Fig. 3. While this curve does not follow Beer's law, it is quite reproducible.

A number of "unknown" sodium fluoride solutions containing 10 to 50 γ fluoride per ml were run by this procedure and the results are shown in Table I.

TABLE I

Colorimetric Analysis of Sodium Fluoride Solutions

SAMPLE	TRANSMITTANCE	γ F FOUND	γ F PRESENT	ERROR
A	75.0	44	45	-2%
B	55.5	14	15	-6%
C	78.0	50	50	0
D	50.0	9	10	-10%
E	76.0	45	46	-2%
F	67.5	31	32	-3%
G	52.0	11	10	-10%

It is evident from these data that solutions containing only sodium fluoride can be analyzed with reasonable accuracy. It is obvious that any ion that would complex with fluoride or the "thoron" reagent would interfere with

NOT CLASSIFIED
DWG. 8619

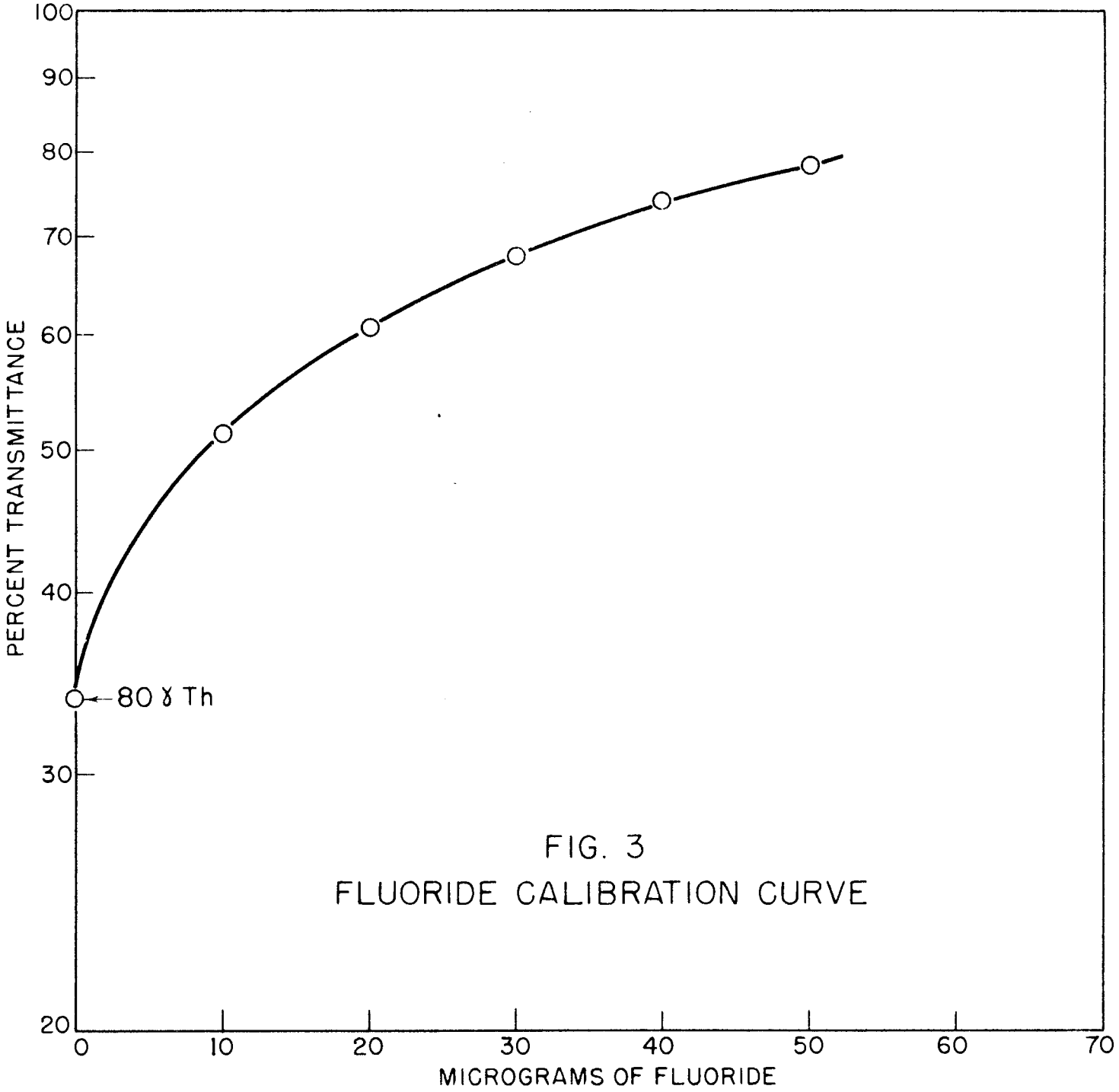

FIG. 3
FLUORIDE CALIBRATION CURVE

this method. However, the Willard-Winter method of separation by steam distilling the fluoride as hydrofluosilicic acid will be tried to eliminate various interferences.

Colorimetric Method for the Estimation of Chromium^{+6} and Chromium^{+3} (P. F. Thomason). The IAW raffinates from the solvent-extraction processing of CR material, which will in turn be processed by the Chemistry Division for neptunium and fission products, contain approximately 0.06 *M* $K_2Cr_2O_7$ with varying amounts of chromium^{+3} together with aluminum nitrate. It will be necessary to analyze for Cr^{+6} and Cr^{+3} in these solutions so that the proper amount of oxidizing agent can be added. As these waste solutions contain fission products, they will be quite radioactive; consequently a method using sub-milliliter samples is desired.

The colorimetric diphenylcarbazide method(8) is quite sensitive and according to Sandell(9) is the best method for determining small amounts of chromium^{+6}. Therefore a standard calibration curve for Cr^{+6} was obtained using the method recommended by Sandell. Bureau of Standards $K_2Cr_2O_7$ was used as the Cr^{+6} standard. Several aliquots of a Cr^{+3} solution, made with chromium potassium sulfate, were tested without oxidation and no color was formed with diphenylcarbazide. It was found that several oxidants, bromine water, $(NH_4)_2S_2O_8$, and $NaBiO_3$ in 0.2 *N* acid solution would oxidize the Cr^{+3} to Cr^{+6} so that they could be determined with diphenylcarbazide. Sodium bismuthate, however, had the advantage of oxidizing the Cr^{+3} at room temperature. Several aliquots of the standard Cr^{+3} solution were pipetted into 15 ml centrifuge cones and oxidized with 0.050 g of $NaBiO_3$. After mixing and allowing to stand five minutes they were centrifuged and decanted into 50 ml volumetric flasks. The precipitate was washed twice with 10 ml of 0.2 *N* H_2SO_4, adding the washings to the 50 ml volumetric flask. The color was developed with diphenylcarbazide and the transmittance of the solution was determined in a Beckman spectrophotometer at 540 mμ. The results are shown in Table II.

---

(8) Moulin, A., "Dosage colorimetrique du chrome," *Bull. Soc. Chim.* 31, 295 (1904).

(9) Sandell, E. B., *Colorimetric Determination of Traces of Metals*, New York: Interscience Publishers, Inc., 192 (1944).

TABLE II

Colorimetric Estimation of Cr^{+3} Oxidized with $NaBiO_3$

SAMPLE	CHROMIUM PRESENT	CHROMIUM FOUND	ERROR
A	10 γ	10	0
B	20 γ	21	+5%
C	30 γ	31	+3%
D	40 γ	40	0

Several mixtures of Cr^{+6} and Cr^{+3} were made and analyzed by the colorimetric method without oxidation to obtain the Cr^{+6} alone and then other aliquots were oxidized with $NaBiO_3$ to obtain the total chromium. The results are shown in Table III.

TABLE III

Analysis of Mixtures of Cr^{+6} and Cr^{+3}

SAMPLE	COMPOSITION	CHROMIUM FOUND	ERROR
E	20 γ Cr^{+6} + 50 γ Cr^{+3}	20 γ	0
F	20 γ Cr^{+6} + 10 γ Cr^{+3}	20.5 γ	+2.5%
G	20 γ Cr^{+6} + 5 γ Cr^{+3} + $NaBiO_3$	24 γ	-4.0%
H	20 γ Cr^{+6} + 10 γ Cr^{+3} + $NaBiO_3$	29 γ	-3.0%

A synthetic sample was made containing 1.6 *M* $Al(NO_3)_3$ plus 0.06 *M* $K_2Cr_2O_7$. Five λ aliquots were carefully pipetted and analyzed. Other 5 λ aliquots of this sample were spiked with small amounts of Cr^{+3} and analyzed by the $NaBiO_3$ procedure. The results are shown in Table IV.

TABLE IV

Analysis of a Synthetic IAW Raffinate

SAMPLE	ALIQUOT	TOTAL Cr PRESENT	TOTAL Cr FOUND	ERROR
I	5 λ	31 γ	32 γ	+3%
J	5 λ	31 γ	32 γ	+3%
K	5 λ + 5 γ Cr^{+3} spike	36 γ	36 γ	0
L	5 λ + 5 γ Cr^{+3}	36 γ	35 γ	-3%

These data show that chromium^{+3} can be determined by this method with reasonable accuracy provided the Cr^{+3} is present in at least a 1 to 6 ratio with Cr^{+6}.

Indirect Polarographic Determination of Sulfates (A. D. Horton and P. F. Thomason). In order to determine the efficiency of the metathesis of the barium-lead sulfate cake for the acetate-citrate RaLa process,[10] it became necessary to determine sulfates in microgram amounts. A micro-volumetric method for sulfates has been established in the range of 1 to 5 mg. This method was adapted from the procedure developed at Los Alamos[11] whereby the sulfate is reduced to sulfide by means of a reducing mixture composed of hydriodic acid, hypophosphorous acid, and hydrochloric acid. The hydrogen sulfide is trapped in ammoniacal $CdCl_2$ solution, and the sulfide sulfur is determined iodometrically.

It was believed that the CdS that was precipitated could be determined polarographically thereby extending the determination of the sulfate into the microgram scale. However, a careful technique for the elimination of the excess $CdCl_2$ solution would be required. Also proper conditions for the precipitation of the CdS would be necessary since a basic CdS precipitate would lead to high results.

(10) Higgins, I. R., Blanco, R. E., Unger, W. E., *Preliminary Demonstration of RaLa Ion Exchange Processes at the Kilocurie Level*, ORNL 623, 9 (Mar. 22, 1950).

(11) Boaz, H. E., Numerof, P., Potratz, H. A., and Throckmorton, W. H., *Chemical and Spectrochemical Analysis of U and Pu Materials*, LA-416, 104 (Jan. 24, 1946).

Cadmium[12] in a 1 *N* KCl supporting electrolyte produces a well-defined wave with the diffusion current directly proportional to the concentration. The half wave potential is -0.64 v vs. SCE.

The procedure thus far developed which shows the most promise requires the use of a specially designed funnel with a medium porosity glass fritt for collecting the CdS. The funnel is filled with 10 ml of ammoniacal $CdCl_2$ which is made up in 1 *N* NH_4Cl, and contains 1 mg $CdCl_2 \cdot 2\frac{1}{2} H_2O$/ml.

A sample containing 5-50 γ $S^=$ (15-150 γ $SO_4^=$) is placed in the still pot with 20 ml of the reducing mixture. Refluxing of the sample is carried out for ten minutes, which is ample time for evolution of all the H_2S. A steady stream of dry nitrogen is introduced into the distilling flask to carry the H_2S through the condenser.

The precipitate is vacuum filtered and washed with 10 ml dilute NH_4OH. The CdS is then dissolved by addition of six drops 2 *N* HCl, and washed into a calibrated tube with 1 *N* KCl electrolyte and diluted to a volume of 4 ml. The resulting solution of $CdCl_2$ is analyzed polarographically.

Results to date have been rather high (4-10%) probably owing either to occlusion of $CdCl_2$ in the CdS precipitate or possibly to a precipitation of a basic CdS. Correction of the precipitation step should lead to a satisfactory micro sulfate determination.

Polarography with Alternately Polarized Platinum Microelectrodes (W. H. Davenport, Jr.). Although dropping mercury electrodes are commonly used in polarography, it is sometimes advantageous or even necessary to use solid microelectrodes. The oxidation of mercury near zero or at positive potentials makes the use of the dropping electrode impossible when studying reactions which occur in this region.

A serious disadvantage in obtaining polarograms with solid electrodes is the difficulty in reproducing the curves. This is considered to be due in part to electrode polarization.

Müller[13] attempted to overcome this effect by using two microelectrodes, alternately polarizing one and depolarizing the other. His work was also re-

---

(12) Kolthoff, I. M. and Lingane, J. J., *Polarography*, New York: Interscience Pub., Inc., 269 (1941).

(13) Müller, S. D., *Trans. All-Union Conf. Anal. Chem.*, 2, 551 (1943).

ported by Morris.[14] Full details of Müller's work have not been obtained, but an attempt is being made to do so.

This scheme has been tried at this laboratory using an electronic relay to reverse the states of polarization at a constant frequency of about one per second. Two platinum microelectrodes were used, each with an area of about 5.88 sq mm. A saturated calomel was used as the reference electrode.

Potassium nitrate solutions of oxygen and silver were investigated at a full scale sensitivity of 10 μamps. Their reduction waves were well defined and, as reported by Müller, similar to the waves obtained with the dropping mercury electrode.

When the sensitivity was increased for more dilute silver solutions (10^{-4} *M* and 10^{-5} *M*), an increase in current similar to that produced by hydrogen reduction appeared. This increase occurred at a potential more positive than would be expected for hydrogen in a nearly neutral solution. The potential at which this increase appeared rapidly approached zero as the sensitivity was increased. A similar phenomenon occurred when solutions were investigated in the region of positive potentials. The potential range through which the double electrode system could be used was then very limited at high sensitivities.

This increase in current, which appears to be almost an exponential function of the potential, was believed to be due to a capacity effect at the electrodes resulting from the polarizing and depolarizing voltage. The two solid electrodes were connected to the saturated calomel electrode through the relay switch in such a way that the electrode not being polarized was at the reference electrode potential. When this connection was broken permitting the depolarized electrode to approach solution potential rather than reference electrode potential, the increase in current phenomenon described above was not as pronounced. This lent support to the capacity effect theory.

Apparently Morris did not encounter this obstacle. This is understandable if he worked at lower sensitivities. The paper reporting Müller's work has been requested but has not been received at this time.

No further work with alternating electrodes is planned unless a way of eliminating the present difficulties becomes apparent.

---

(14) Morris, C. J. O. R., "The Rotating Platinum Electrode," *Analyst* 72, 298-301 (1947).

Polarographic Determination of Cadmium in Cadmium Contaminated Aluminum (H. H. Miller). In storing enriched uranium-aluminum alloy assemblies to be used in the MTR Mock-up, the Metallurgy Division had wrapped the assemblies in cadmium foil to prevent the assemblies from reaching criticality. It was considered desirable to determine how much cadmium had rubbed onto the assemblies. The assemblies were wiped with filter paper and the paper submitted for cadmium and aluminum analysis along with several samples of aluminum strips which had been rubbed on cadmium metal.

Each piece of filter paper was leached with 35 ml of 2 *N* HCl for an hour. This dissolved the cadmium and aluminum adhering to the filter paper. The acid was decanted and evaporated to dryness in a Vitrosil dish. The organic material present in the residue was destroyed by dissolving the residue in 2 ml of water and 2 ml of conc HNO_3, heating the solution a few minutes, then adding 2 ml of concentrated $HClO_4$. The solution was taken to dryness again, and the treatment was repeated until the residue was white. The residue was then taken up in 5 ml of 0.1 *M* $HClO_4$ to be polarographed and analyzed by the standard addition method.[15]

The two inch aluminum strips which had been rubbed on cadmium metal were heated slightly in 25 ml of 2 *N* HCl for about thirty minutes to dissolve a surface layer. The acid was decanted into a Vitrosil dish and evaporated to dryness. The residue was treated with HNO_3 and $HClO_4$ as previously described and taken to dryness. The residue was taken up in 5 ml of 0.1 *M* $HClO_4$ and analyzed polarographically for cadmium.

Blanks on filter paper and two inch aluminum strips were treated as described above and run polarographically. The aluminum in the 5 ml of 0.1 *M* $HClO_4$ was analyzed by the conventional colorimetric procedure. The results are shown in Table V.

Polarographic Determination of Uranium in Plutonium Solutions (H. H. Miller). In the testing of the uranium cycle of the Redox process in the ORNL pilot-plant the plutonium was separated from the uranium and collected for further purification. After the plutonium solution had been subsequently purified, it was then concentrated and submitted to the 205 Control Group for analysis. A fluorimetric uranium analysis on the plutonium product showed

---

(15) Kolthoff, I. M. and Lingane, J. J., *op. cit.*, p. 251.

TABLE V

Results of Determination of Cadmium and Aluminum

SAMPLE	γ Cd/UNIT[a]	Mg Al/UNIT[a]
F (strip of Al-flat side rubbed on Cd)	169	3.8
Strip of 2-S Al (Blank)	No detectable amount	13.9
[b]184 #1 (filter paper	[c]--	[c]--
#2 rubbed on	14	3.2
#3 assembly)	30	3.7
#4	11	2.6
[b]190 #1 (filter paper	379	2.2
#2 rubbed on	128	1.3
#3 assembly)	98	1.6
#4	47	0.85
[b]X-1 (filter paper	135	0.51
X-2 rubbed on Al	714	0.30
X-3 which had been rubbed on Cd metal)	334	0.29
E (strip of Al-edge rubbed on Cd)	120	41.2
#40 Filter paper (blank)	No detectable amount	--

a. Filter paper or strip of aluminum.

b. The descending numbers of the individual samples represent the order in which they were used to wipe the assemblies.

c. Lost the sample in proving the method.

that in some cases there was more uranium present than expected. A polarographic method for determining uranium in the presence of plutonium was developed to substantiate the fluorimetric results.

Because Pu^{+6} gives a polarographic wave starting at zero applied potential with the dropping mercury electrode, uranium solutions containing Pu^{+6} cannot be analyzed directly. However, since Pu^{+3} does not give a wave in the range of the DME, it should be possible to reduce the Pu^{+6} to Pu^{+3} and then analyze for uranium. Hydroxylamine hydrochloride will reduce Pu^{+6} to Pu^{+3} but will not reduce U^{+6}. Therefore the analysis for uranium in the presence of Pu^{+6} can be done by the addition of hydroxylamine hydrochloride to the solution.

The Redox sample contained about 15 mg Pu/ml and 3 mg U/ml. The polarographic solution was made by diluting 500 λ of the original sample to 25 ml with 0.1 *M* HNO_3 plus a small amount of $NH_4OH \cdot HCl$. This gave a solution of approximately 0.3 mg Pu/ml and 0.06 mg U/ml. This solution was polarographed and analyzed by the standard addition method. The uranium wave was normal and had an E ½ of about -0.18 v vs. SCE. The polarographic result was 2.85 mg U/ml in the original sample and the fluorimetric value was 2.5 mg U/ml, which is in agreement within the limits of error. Other samples were analyzed by this method and good results were obtained.

Determination of the Accuracy of the Polarographic Method for Uranium Analysis in the 25 Process Feed Solutions (H. H. Miller). The method for the polarographic analysis of uranium in the 25 process feed solutions has been described in a previous quarterly report.[16] As stated in that report, the feed solutions in this process contained several impurities that interfered with the colorimetric and the usual polarographic analysis for uranium. Essentially, the polarographic procedure finally used consisted of making a large dilution on the original feed sample to give a final uranium concentration of approximately 50 γ U/ml. This large dilution minimized the copper interference which comes at the beginning of the uranium wave. Approximately 30 mg of sodium citrate was added to 10 ml of this dilution which shifted the wave due to the other impurity to a more negative potential, leaving the uranium wave in the usual position. Since this last impurity was present in

(16) Miller, H. H., "Routine Analysis of Uranium by Polarographic Method," *Chemistry Division Quarterly Report for Period Ending December 31, 1949*, ORNL 607, 176 (Mar. 7, 1950).

such small concentrations in a very hot solution, it was never identified. Therefore no standard solutions could ever be made up to determine the accuracy of the method in its presence.

It was necessary to determine the accuracy and the bias of the method for the final report of the 25 process. The only way to do this was to take an unirradiated slug of the same chemical nature as those used in the process and treat it as it had been treated in the process. It was hoped in this way to be able to duplicate the chemical composition of the pilot plant solutions, although it was actually found that the laboratory solution did *not* contain the same impurities which caused difficulty in the pilot plant.

A piece of slug was dissolved in nitric acid, and the solution was made up to correspond to the process feed solutions. It was adjusted to the following specifications:

U conc	~ 2.48 mg U/ml
Specific Gravity	1.2460 at 25°C
Basicity	0.18 *N* acid deficient

L. T. Corbin analyzed this solution for uranium by the ferric sulfate volumetric method and all further analyses were based on this analysis as giving the true value of the uranium concentration.

P. F. Thomason made six dilutions in duplicate from this solution using calibrated equipment, with the uranium concentration ranging from 0.55 to 0.75 mg U/ml. These dilutions correspond to the adjusted feed solutions that had been polarographically analyzed during the 25 process runs.

The twelve samples were run polarographically using the sodium citrate method as described above. The results were given to A. M. Rom to be subjected to statistical treatment by the K-25 Statistical Dept. to determine the accuracy and bias of the method. Their complete results will be published later, however the bias was calculated as being -0.023 ± 0.02 mg and the standard deviation was 6.5%.

A Polarograph for Analysis of Very Dilute Solutions (10^{-6} *M*) (M. T. Kelley, H. H. Miller, and W. H. Davenport, Jr.). In previous quarterly reports, the general features of the polarograph used for this work in dilute

solutions have been described briefly. Since the development of the instrument now seems to be essentially finished, a description of the complete instrument seems in order. A more detailed description will be published later in a separate report.

The polarizing unit of the ORNL polarograph (shown schematically in Fig. 4) does not differ radically from that used in other instruments. A battery, E_1, supplies a fixed potential, measured on voltmeter V_1, to a motor driven Helipot, R_{2A}, from which the polarizing voltage for the polarographic cell is drawn. The 10-turn Helipot, R_{2A}, is turned by a 1 rpm Bodine motor, with provisions for reversing and a friction clutch to allow a quick return to zero potential. A second potential source E_2 can be used to supply an initial potential up to three volts either positive or negative. Thus the total useful voltage range is from +3 volts to -4.5 volts.

The current through the polarographic cell is measured by recording the potential drop in a series of standard (±1%) resistors, R_{11} to R_{22}. Damping is supplied by the RC combination, R_6 and C_1, with a time constant up to 20 seconds. The network between the two large electrolytic condensers, C_2 and C_3, provides a means of setting the zero of the instrument and also is useful to buck out currents due to causes other than the diffusion current of the ion desired. The range of R_{10} (a 200 ohm Helipot) is about 30 times the full scale deflection of the recorder. The true zero is at mid-scale or about 6.0 on the Helipot dial.

The remaining resistor network consisting of R_{2B}, R_3, R_4, and R_{23} to R_{30} constitutes a linear compensator to buck out the "condenser" current at high current sensitivities with the dropping mercury electrode. With R_4 out of the circuit (on point 1 of the switch S_4) and S_3 closed, this network supplies a potential to the recorder which is opposite in sign to the normal component of cell current and increases with the increase of potential from R_{2B} (which is directly coupled to R_{2A}). The degree of compensation can be adjusted by setting R_3 (a 10-turn Helipot), or the compensation can be eliminated by opening S_3. R_4 can be shunted across three different fixed taps on R_{2B} (at 2, 4 or 6 turns) so that correction can be applied according to two different linear formulas, changing at a preselected point. To date, this feature has not proven very useful, because the blank curves do not show abrupt changes of slope

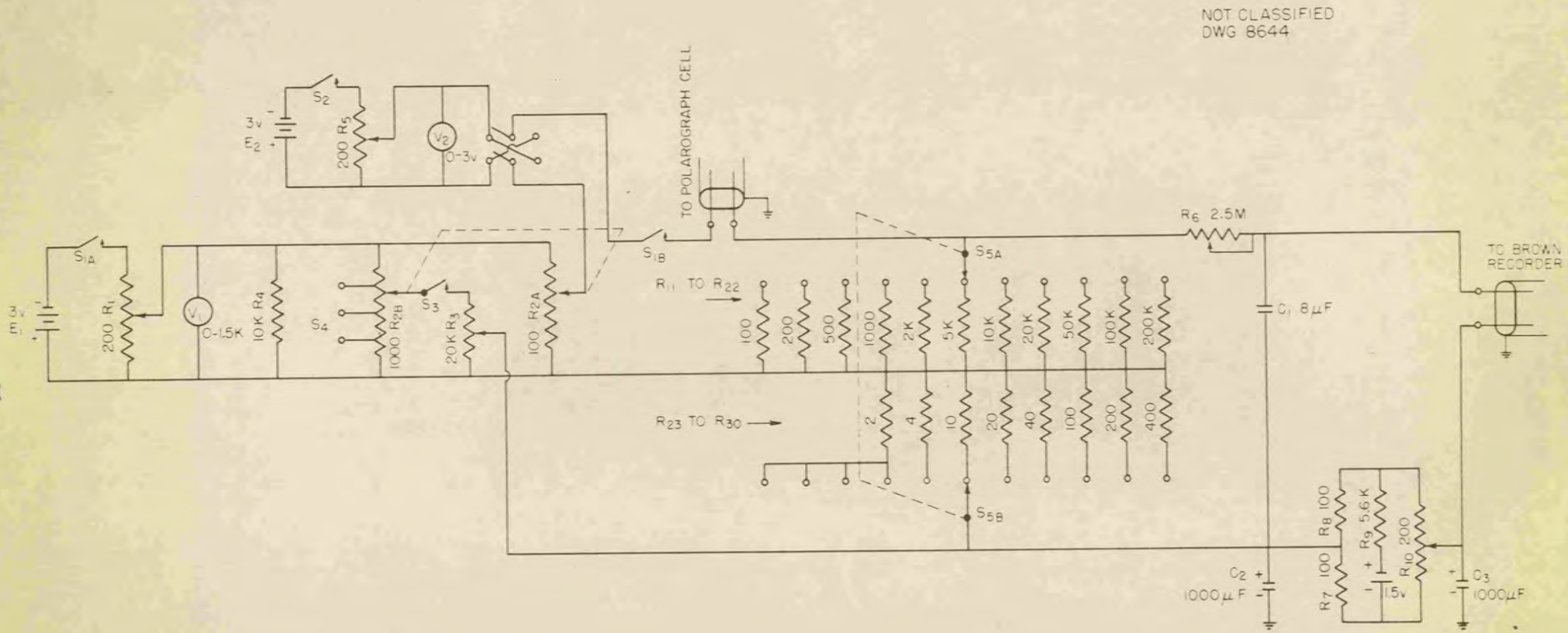

FIG. 4
ORNL POLAROGRAPH POLARIZING UNIT

which can be closely approximated by two linear curves. The "curve follower" has proven more useful to compensate for non-linearity in the blanks.

The recorder used in the ORNL polarograph is a 1 millivolt range Brown Recorder which has been modified by introduction of a preamplifier similar to that developed by Rosenbaum and Stanton.[17] The final model of this preamplifier is now under construction and consequently no circuit will be given at this time. It is sufficient to say that this amplifier converts the Brown to a recorder having a 1 millivolt range and an input impedance of one megohm. This feature permits using very high current sensitivities without excessively large current measuring resistors. This also permits the use of a high impedance damping circuit which is practically independent of current sensitivity setting so far as time constant is concerned. The range of current sensitivity is from 10 microamperes to 0.005 microamperes for full scale deflection on the recorder. Thus far 0.02 microamperes for full scale is the greatest sensitivity which has been used.

It was mentioned in previous work on the polarography of dilute solutions[18] that the curves obtained on blanks differed greatly from the ideal straight line at the sensitivities which were necessary for this work. A notable example of this kind is that of the blank obtained upon ammonium oxalate solutions, which appeared to show a wave for iron although there was no iron present. (An example of such a blank will be shown in a later section of this report.) In an attempt to eliminate such blanks a device called a "curve follower" has been added to our polarograph. A block diagram of this device is shown in Fig. 5, and a circuit diagram of the amplifier circuit is shown in Fig. 6. This device was developed by Coor and Smith[19] and was modified by J. R. Tallackson of the ORNL Instrument Department.

In operation a hand-drawn blank curve (derived from the blank curve drawn on the polarograph by plotting mid-points of the oscillations and inking with a brush pen) is placed on the curve follower. The curve follower illuminates the line with two small bulbs, and an image is focused on a photocell by means of a low-power microscope objective. When the image is half white and half

---

(17) Rosenbaum, F. J. and Stanton, L., "Continuous Recording Ultraviolet Spectrophotometer," *Anal. Chem.*, 794-798 (1947).

(18) Kelley, M. T., Miller, H. H., and Davenport, W. H., Jr., "Ionic Analyses—Research and Development," *Chemistry Division Quarterly Progress Report for Period Ending December 31, 1949*, ORNL 607, 176-177 (Mar. 7, 1950).

(19) Coor, Thomas, Jr. and Smith, Don C., "An Automatic Recording Spectrophotometer," *Rev. Sci. Inst* 18, 173-181 (1947).

NOT CLASSIFIED
DWG 8645

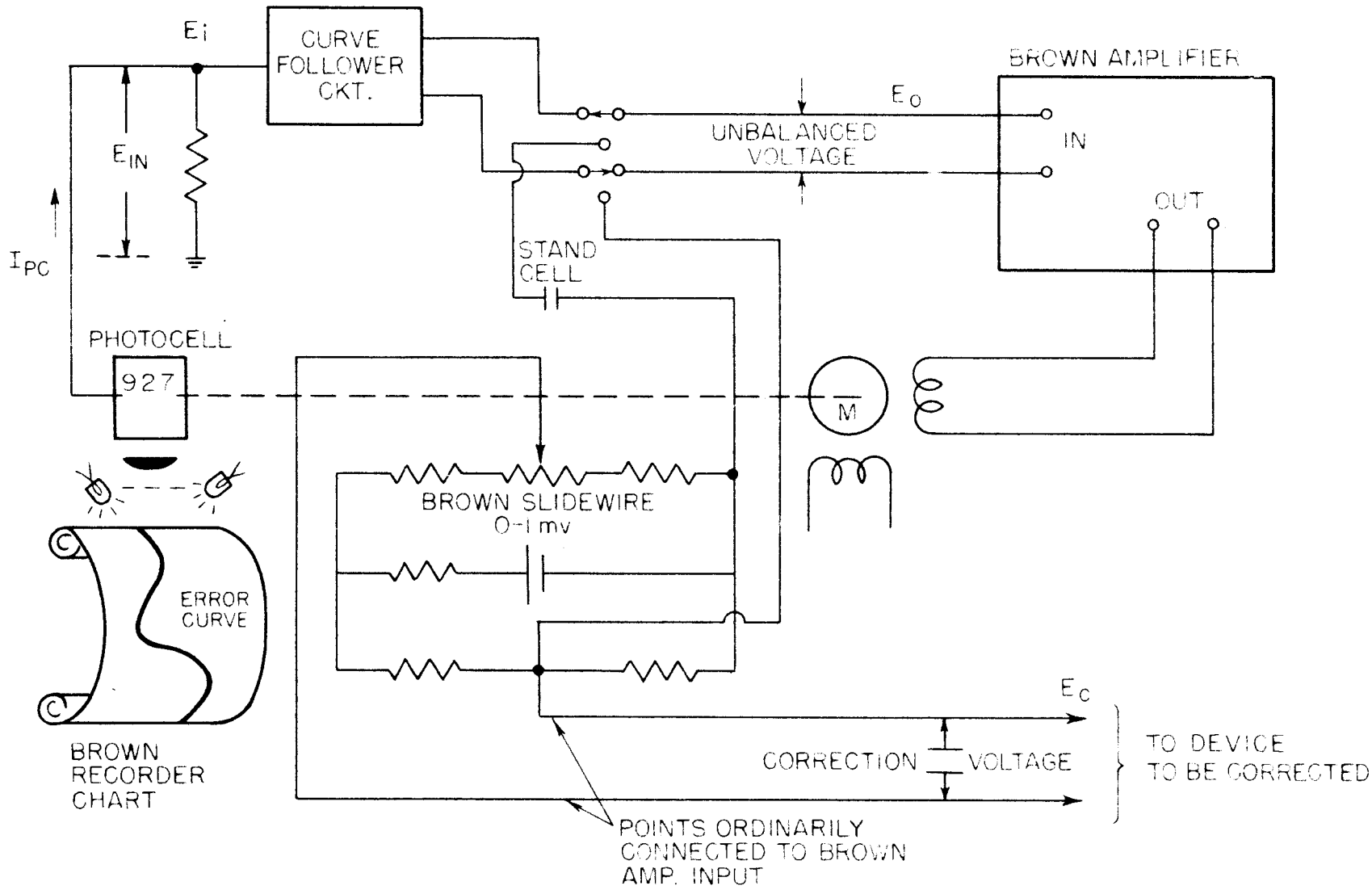

FIG. 5
BLOCK DIAGRAM OF "CURVE FOLLOWER"

FIG. 6
CIRCUIT DIAGRAM FOR "CURVE FOLLOWER" Q983

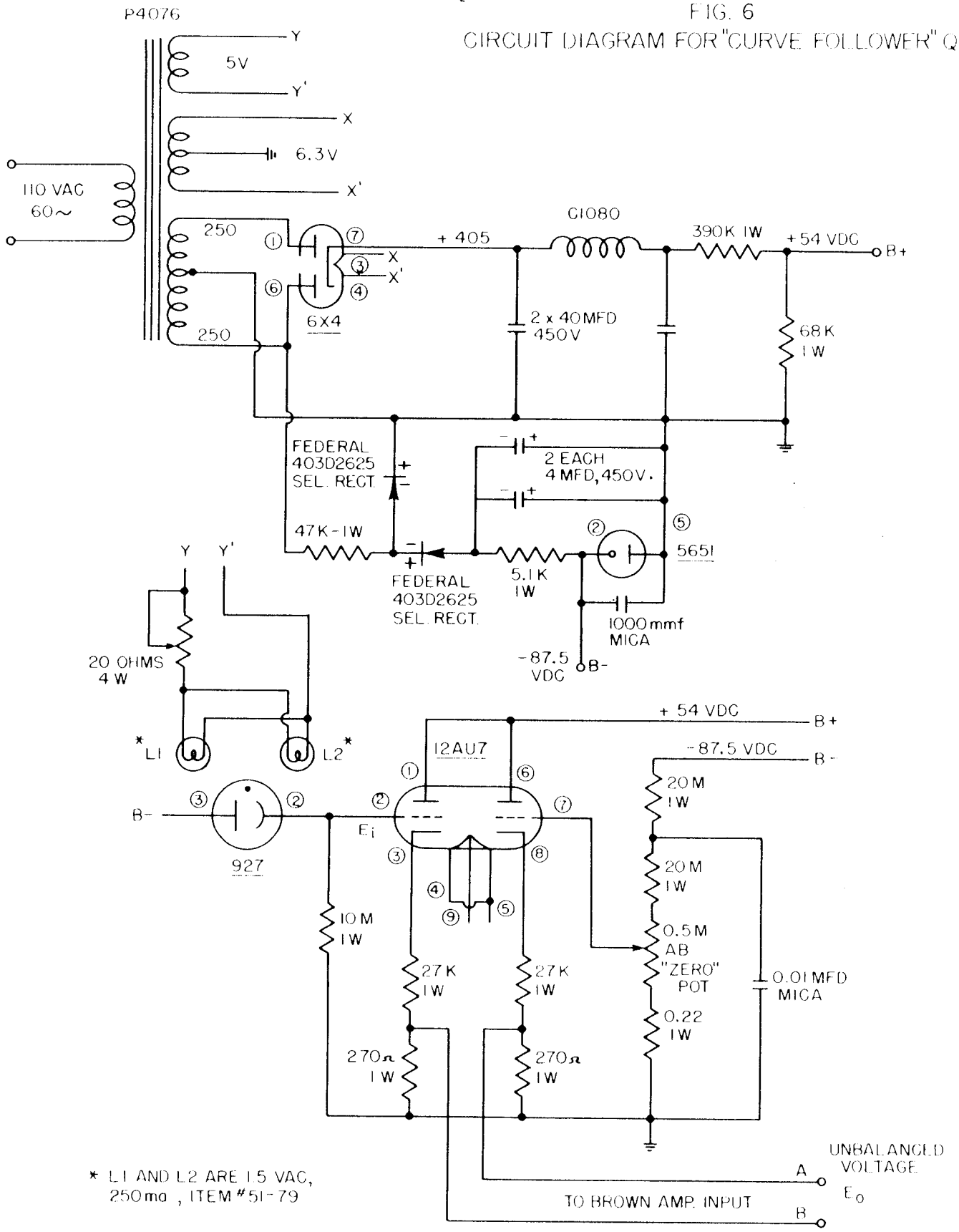

black, the output of the curve follower, E_0, is zero and the Brown motor is stationary. When the curve shifts, the white or black part of the image becomes larger and this causes the output of the curve follower, E_0, to be a small negative or positive potential. This potential causes the Brown amplifier to put out an a-c signal which moves the Brown motor (and the light and photocell unit) until balance of white and black is restored. Hence, as the curve is turned through the instrument, the light and photocell are moved in such a way as to follow the right-hand edge of the blank curve. This moves the slidewire in the Brown at the same time, and a correction signal can be taken from this slide wire. If this correction signal is fed into the polarograph in opposition to the signal from the polarographic cell, the blank curve should be reduced to a straight line (with oscillations, of course). Curves shown in a later section of this report will show that great improvement was shown by the use of the curve follower, although the attainment of a perfectly linear blank curve has not as yet been possible.

Using the Curve Follower in the Determination of Low Concentrations of Lead and Iron in Ammonium Oxalate (H. H. Miller). W. H. Davenport has previously described a method[20] for analyzing iron and lead polarographically in an oxalate medium for the radiobarium process.

The concentrations of iron and lead were very small because a small sample had to be used due to the high radiation involved. Because of the small concentrations, it was necessary to go to high sensitivities (0.003 μa/in.) on the polarograph. At this sensitivity the blank curves drawn are far from ideal, because a large and irregular residual current is produced.

With the aid of the curve follower it is possible to straighten out these irregularities and to produce a blank that is more nearly a straight line. The technique for using the curve follower is described elsewhere in this report.

The polarograms shown here illustrate just how useful this instrument may be. Figure 7, Curve I, shows a typical blank given by the oxalate medium. With this blank traced onto the curve follower chart a new blank curve is drawn, Figure 7, Curve II, with the curve follower applying the necessary correction at the same time the polarograph is in operation.

---

(20) Kelley, M. T. and Davenport, W. H., Jr., "Determination of Iron and Lead in Radioactive Barium Preparations," *Chemistry Division Quarterly Report for the Period Ending December 31, 1949*, ORNL 607, 178-179 (Mar. 7, 1950).

FIG. 7
POLAROGRAMS OF IRON AND LEAD IN 0.01 M OXALIC ACID, 0.1 M AMMONIUM ACETATE, 0.1 M ACETIC ACID USING THE "CURVE FOLLOWER"

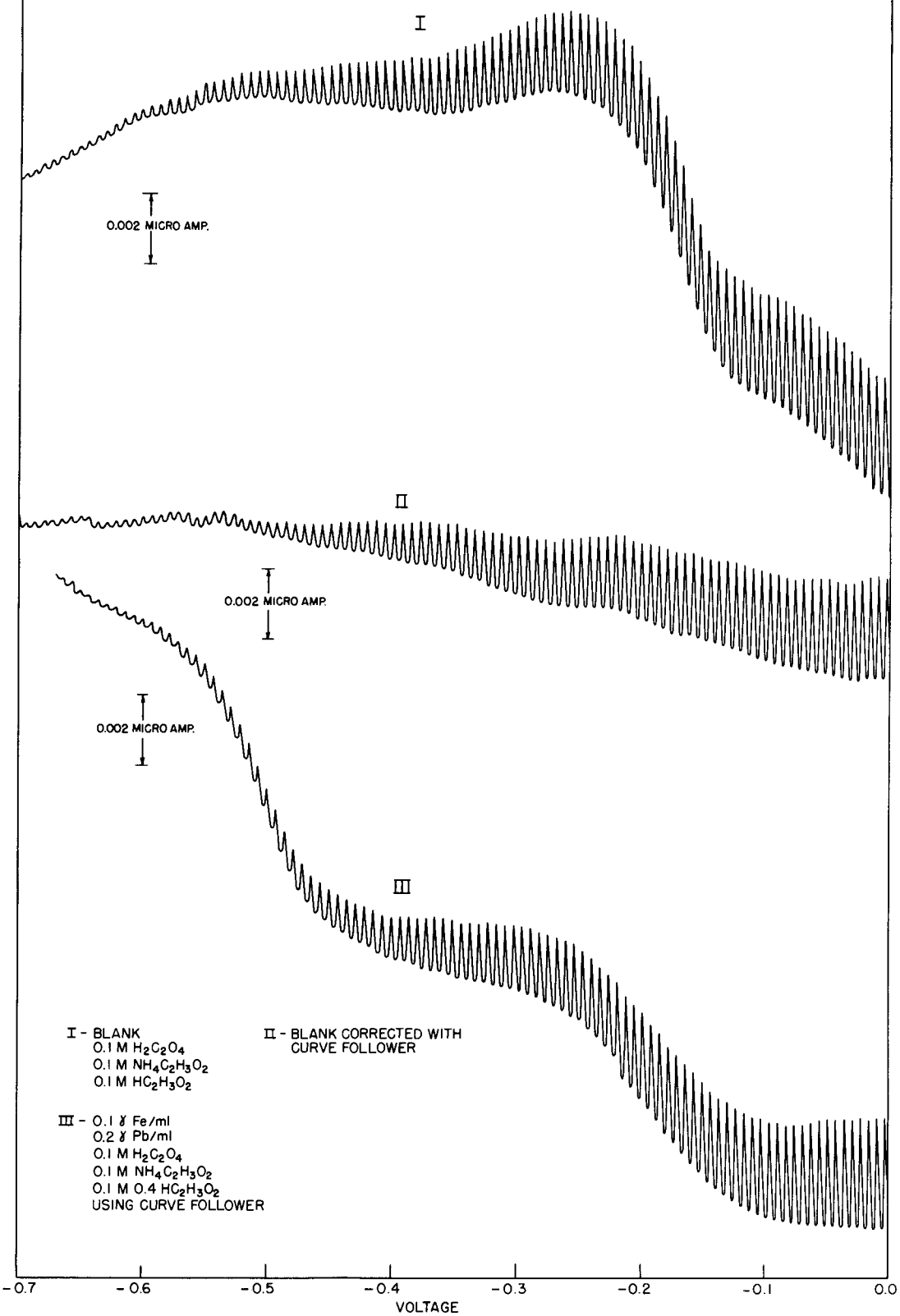

Figure 7, Curve III, is a polarogram of a solution of 0.1 γ Fe/ml and 0.2 γ Pb/ml in the oxalate medium. This solution was polarographed at the same time that the curve follower was applying the corrections as determined by the previously drawn blank (Figure 7, Curve I).

With the aid of the curve follower, concentration versus diffusion current studies will be made for comparison with those made by W. H. Davenport prior to the completion of the curve follower. These diffusion current studies will also be extended to other ions in very dilute solutions.

Determination of Lead and Iron in Radioactive Barium Preparations (W. H. Davenport, Jr.). A study has been made of the variation of diffusion current with concentration for lead and iron solutions at low concentrations. The instrument described above, but without the "curve follower," which had not been completed at the time of this work, was used for this purpose. Lead and iron were chosen for the study because the polarographic method is used for the analysis of traces of these ions in radiobarium samples.[21]

Polarograms were obtained in a buffered oxalate solution, 0.01 *M* oxalic acid, 0.1 *M* acetic acid and 0.1 *M* ammonium acetate, containing 0.115 *N* ammonium nitrate to simulate conditions in radiobarium analysis.

The polarography of chromium and nickel in this medium was investigated since analysis for these ions would be desirable also. A reduction wave for chromium appeared at about -1.0 volts but was not measurable for analytical purposes. Nickel did not give a reduction wave.

The data for iron and lead appear in Tables VI and VII. The test for linearity in the relationship of diffusion current versus concentration is to be found in column 4 which lists the diffusion currents in microamperes divided by the millimolar concentrations. According to the Ilkovic equation this value should be a constant if other factors remain unchanged. This is true in the case of lead within the limits of accuracy at the high sensitivities used. There is a definite decrease in the diffusion current "constant" with decreasing concentration for iron in the range studied. An explanation of this behavior might be that iron, in very dilute and almost neutral solutions, plates out on the wall of the containing vessel. There is no proof as yet that this takes place. The relatively high blank at the potential for iron reduction may be a significant source of error here.

---

(21) Kelley, M. T., *op. cit.*

At the present time a procedure combining a calibration curve and the standard additions method is used for the analysis of iron in radiobarium samples in order to compensate for this deviation from linearity.

The analysis for chromium and nickel would require another supporting electrolyte. The choice would be limited if "Versene," used in the ion-exchange process for barium-separation, were present. Nickel is complexed strongly by "Versene." In the absence of "Versene," it appears that either a one molar ammonium hydroxide or pyridinium chloride in buffered acetate solution could be used for nickel. Further work is planned on the analysis for these ions.

TABLE VI

Variation of Diffusion Current with Concentration for Very Dilute Solutions of Iron

CONCENTRATION IN MILLIMOLES	FULL SCALE SENSITIVITY (μamps)	CURRENT IN μAMPS CORRECTED FOR BLANK*	DIFFUSION CURRENT PER MILLIMOLE, CORRECTED FOR BLANK*
0.00172	0.0200	0.0029	1.69
0.00344	0.0500	0.0060	1.75
0.00859	0.100	0.0250	2.91
0.0172	0.100	0.0585	3.40
0.0344	0.200	0.121	3.50

* Blank equals 0.0055 μamps.

TABLE VII

Variation of Diffusion Current with Concentration for Very Dilute Solutions of Lead

CONCENTRATION IN MILLIMOLES	FULL SCALE SENSITIVITY (μamps)	CURRENT IN μAMPS	DIFFUSION CURRENT PER MILLIMOLE (μamps)
0.000927	0.0200	0.0075	8.09
0.00186	0.0200	0.0154	8.29
0.00464	0.100	0.0380	8.18
0.00927	0.100	0.0750	8.09
0.0186	0.200	0.152	8.18

RADIOCHEMICAL ANALYSES—RESEARCH AND DEVELOPMENT

Activation Analysis (W. A. Brooksbank, G. W. Leddicotte, and S. A. Reynolds). A program in analysis by slow-neutron activation has been underway for some time. The growing interest in this method, shown by the fact that a number of companies have submitted samples for analysis, has led to the assignment of one man (Leddicotte) to full time development. Several samples of bentonite were submitted by California Research Corporation for identification of elements capable of slow-neutron activation which would serve to "trace" the bentonite. The major long-lived components of the induced activity were found to be P^{32} (14.3 d β^-) and Fe^{59} (47 d β^-, γ).

In the analysis of Rb_2CO_3 (see following section, "Radioisotope Target Materials"), the percentage of Cs was calculated to be 0.02%, from yield of activity, estimated flux, bombardment time, and cross section.

Methods for activation analysis for various elements in numerous materials will be developed as the need arises.

Explanatory material and a table of sensitivities have been prepared for distribution to people interested in the use of this technique. These are reproduced below.

The usefulness of radioactive tracers to follow the progress and to test the completeness of a chemical separation was soon recognized after the discovery of artificial radioactivity itself. This ability to produce artificial radioactivity, with its subsequent application as a radioactive tracer, has provided a new and very convenient method for the determination of impurities in various commercial materials.

The technique of activation analysis may be applied to a large number of elements, several of which are difficult to detect by conventional methods. Detection of impurities in a sample may be accomplished by subjecting the sample to an intense source of nuclear particles for appropriately chosen periods of time. The artifically radioactive isotopes of the chemical elements present in the sample are then identified and assayed by radiochemical analysis.

This compilation of the sensitivity of activation analysis is specific for activation by slow neutron capture. Radioactivation is not necessarily limited to n, γ reactions, but activation by charged particles, *e.g.* deuterons, is somewhat complicated by competing reactions and "self-shadowing" effects.

As already indicated above, a sample to be analyzed is subjected to an intense flux of slow neutrons for an appropriately chosen length of time to to produce a measurable amount of a radioisotope of the element to be determined. The activity, A_t, present for a given radioisotope at a time t after the start of the bombardment is given by the expression

$$A_t = Nf\sigma_{at}S,$$

where

N = the total number of nuclei of the element present in the sample,

f = the slow neutron flux,

σ_{at} = the "atomic" cross section for the n, γ reactions leading to the formation of the radioisotope of that element (Units = 10^{-24} cm^2 = 1 barn),

S = the saturation factor, $1 - e^{-\lambda t}$, or the relative amount of activity produced, which varies between zero and unity depending upon length of irradiation time.

Assuming that the rate of production of radioactivity, given by $Nf\sigma_{at}$, is constant during the bombardment period, then, it is possible to express the above equation in terms of the weight of the element.

$$\text{gms of } X = \frac{(A_t)\ (M)}{(6.02 \times 10^{23})\ (f)\ (\sigma_{at})\ (S)}$$

In the compilation of the attached chart of activiation sensitivities

A_t = activity in disintegrations/second = 40 d/sec (the practical limit for separation and measurement,

M = the chemical atomic weight of the element sought,

f = flux = 5×10^{11} neutrons/cm^2/second,

S = unity, or that fraction of saturation attained in a 30 day irradiation period.

The method of slow-neutron activation is capable of high sensitivity for many of those elements which are not readily determined by conventional methods. The sensitivity by which a small mass of the element sought after may be detected, however, is dependent upon

1. The slow-neutron flux of the reactor,
2. The "atomic" cross section,
3. The half-life of the radioisotope (should be rather short),
4. The atomic weight,
5. The amount of high cross-section material, or substances which might interfere strongly in the separation of the desired element.

Along with these factors it is necessary to consider the radiation characteristics of the radioisotope produced in the reaction and the efficiency with which these radiations can be measured. Those radioisotopes which emit beta rays or positrons of sufficient energy can be determined with reasonable accuracy with ordinary equipment. If the energy of the radiation emitted is low, then special counting techniques are necessary. Likewise, radioisotopes emitting only gamma rays, X rays, or low energy conversion electrons require special counting techniques; hence, these are not very satisfactory in activation analysis.

No attempt will be made to discuss the mode of analysis, since isolation and assay of the desired activity may be accomplished by various techniques depending on the nature of element and sample.

The limitation on the size of the samples subject to bombardment is less severe than those encountered in some of the conventional methods of analysis. However, as outlined above, the ease with which an element may be detected is dependent upon its cross section, the interference from other substances, etc. Thus, the size of the commercial sample submitted for activation should be influenced by the originator's desires. For example, in requests for traces of metallic ions in organic materials, it is well to submit samples in the range of 50 grams, while analysis for a major constituent might require less than 1 mg of sample.

The rapidity with which an originator can expect to receive analytical results is dependent upon factors of pile scheduling, the separation process, the nature of the radioisotope chosen to characterize the desired element, etc. Hence, a reasonable time from the date of submission of the sample

should be allowed for return of analytical data. Since no general statement can be made upon the degree of accuracy of analysis, probable errors will be included in data for individual analysis.

The attached table of activation sensitivities (Table VIII) shows only those sensitivities of most of the elements from 1 to 83 (with T 1/2 > 10 min.) which can be determined by activation analysis. The first four columns list the target element, the isotope of interest produced by neutron bombardment, its half-life and characteristic radiation. The fifth column gives the cross section of the total element for production of the isotope by neutron bombardment, and the seventh column gives the sensitivity of detection in micrograms for the element. These sensitivities apply to simple cases where the sample does not contain large amounts of high-cross-section material, or substances interfering strongly in the separation of the desired element. Calculations are made for "saturation activity," except in the case of long-lived isotopes, for which the sensitivities have been those for the amount of activity produced in 30 days.

Radioisotope Target Materials (W. A. Brooksbank, G. W. Leddicotte). This group was given the task of extending the work of Overman *et al.*[22] in determining yields of product and impurities in bombardment of various radioisotope target materials in the ORNL reactor. Recently, a sample of Rb_2CO_3 was submitted for analysis after bombardment for 909 days at 49% maximum flux ($\sim 6 \times 10^{11}$ n/cm^2/sec). After dissolution in water, the material was separated in Rb and Cs fractions by cation exchange (see below, "Application of Ion Exchange to Radiochemical Analysis"). Only alkali metal activities were found. The yield of $\sim$ 19 d Rb^{86} was found to be 1.3×10^8 d/m/mg Rb_2CO_3, corresponding to a thermal-neutron capture cross section for Rb^{85} of 1 barn (from estimated value of flux), compared with the accepted value of 0.7.[23] About 0.7% of the total beta activity and 81% of the gamma activity were due to Cs^{134}, present to the extent of 0.02%, as calculated from the yield of its beta activity, etc.

Most of the work on a number of other target materials has been completed and will be reported later. A determination of the yield of activity from iridium oxide is now in progress.

---

(22) Overman, R. T. *et al.*, *Descriptive Manual of Radioisotopes by Neutron Bombardment in the Clinton Pile*, ORNL 4 (April 5, 1948).

(23) See references in Activation Analysis Table (Table VIII).

TABLE VIII

Sensitivities of Activation Analysis (ORNL Reactor - n,γ Reactions)

ELEMENT	ISOTOPE PRODUCED [a]	T 1/2 [a]	RADIATION [a]	"ATOMIC" σ ac (barns) [b]	SATURATION (or % saturation in 1 month) [c]	SENSITIVITY (μg)	REFERENCES
Na	Na^{24}	14.8 hr	β^-, γ	0.41-0.45		0.007	(4)(5)
Mg	Mg^{27}	10.2 min	β^-, γ	0.00565		0.6	(1)
Si	Si^{31}	170 min	β^-	0.0037		1	(1)
P	P^{32}	14.3 days	β^-	0.029	76.7	0.02	(1)
S	S^{35}	87.1 days	β^-	0.0052	21.2	4	(2)
Cl	Cl^{38}	38.5 min	β^-, γ	0.138		0.03	(5)
K	K^{42}	12.4 hr	β^-, γ	0.067		0.08	(1)
Ca	Ca^{45}	180 days	β^-	0.013	10.8	3.8	(1)
Ca	Ca^{49}	2.5 hr	β^-, γ	0.0004		13	(1)
Ca	Ca^{49}	30 min	β^-	0.001		5.3	(1)
Sc	Sc^{46}	85 days	β^-, γ K(?)	14.4	21.5	0.002	(2)
Cr	Cr^{51}	26.5 days	K, γ, e^-	0.732	54.3	0.2^+	(8)
Mn	Mn^{56}	2.59 hr	β^-, γ	13		0.0006	(1)
Fe	Fe^{59}	47 days	β^-, γ	0.0024	33.2	9	(2)
Co	Co^{60}	5.3 yr	β^-, γ	34	1.08	0.02	(6)
Ni	Ni^{65}	2.6 hr	β^-, γ	0.03		0.3	(8)
Cu	Cu^{64}	12.8 hr	K(42%), β^-(39%) β^+(18.5%), γ(with K 0.5%)	2.97		0.007	(9)
Zn	Zn^{68}	57 min	β^-	0.202		0.04	(1)
Ga	Ga^{72}	14.3 hr	β^-, γ	1.35		0.007	(1)
Ge	Ge^{75}	89 min	β^-, γ	0.22		0.04	(6)
Ge	Ge^{77}	12 hr	β^-, γ	0.027		0.4	(6)
As	As^{76}	26.8 hr	β^-, γ	4.3		0.002	(1)
Se	Se^{80}	17 min	β^-	0.23		0.05	(1)
Se	Se^{83}	25 min	β^-, γ	0.0055		2.0	(3)
Br	Br^{80}	18 min	β^-(97%), β^+(3%), γ	4.09		0.003	(1)

TABLE VIII (Cont'd)

ELEMENT	ISOTOPE PRODUCED[a]	T 1/2[a]	RADIATION[a]	"ATOMIC" σ ac (barns)[b]	SATURATION (or % saturation in 1 month)[c]	SENSITIVITY (μg)	REFERENCES
Br	Br^{82}	34 hr	β^-, γ	1.11		0.01	(1)
Rb	Rb^{86}	19.5 days	β^-, γ	0.52	65.6	0.03	(1)
Sr	Sr^{87m}	2.7 hr	I.T., e^-, γ	0.128		0.6*	(1)
Y	Y^{90}	62 hr	β^-	1.24		0.01	(1)
Zr	Zr^{95}	65 days	β^-, γ, e^-	0.06	27.3	0.7	(7)
Zr	Zr^{97}	17 hr	β^-, γ	0.045		0.3	(7)
Cb	Cb^{94m}	6.6 min	β^-(0.01-0.1%) I.T., e^-	1.20		10-100	(1)
Mo	Mo^{99}	67 hr	β^-, γ	0.099		0.1	(1)
Ru	Ru^{103}	42 days	β^-, γ	0.376	39.0	0.1	(1)
Ru	Ru^{105}	4-4.5 hr	β^-, γ	0.122		0.1	(1)
Pd	Pd^{109}	13 hr	β^-	3.10		0.005	(1)
Ag	Ag^{110}	225 days	β^-, γ, e^-(?), K(?), β^+(?)	1.12	9.0	0.14	(1) [12]
Cd	Cd^{115}	2.33 days	β^-, γ	0.317		0.05	(1)
Cd	Cd^{115m}	43 days	β^-, γ	0.04	38.4	1	(1)
Cd	Cd^{117}	170 min	β^-	0.106		0.14	(1)
In	In^{116}	54 min	β^-, γ	139		0.0001	(1)
Sn	Sn^{121}	1.1 days	β^-, γ (?)	0.072		0.2	(10)
Sb	Sb^{122}	2.8 days	β^-, γ, e^-	3.89		0.004	(1)
Sb	Sb^{124}	60 days	β^-, γ	1.82	29.3	0.03	(2)
Te	Te^{127}	9.3 hr	β^-	0.146		0.1	(5)
I	I^{128}	25 min	β^-, γ	7.0		0.002	(5)
Cs	Cs^{134m}	3.15 hr	β^-, γ	0.016		1	(1)
Cs	Cs^{134}	2.3 yr	β^-, γ, e^-	26	2.4	0.03	(1)
Ba	Ba^{139}	84 min	β^-, γ	0.365		0.05	(1)
La	La^{140}	40.4 hr	β^-, γ	8		0.002	(5)
Ce	Ce^{141}	28 days	β^-, γ	0.354	52.3	0.1	(5)
Ce	Ce^{143}	33 hr	β^-, γ	0.122		0.2	(1)

TABLE VIII (Cont'd)

ELEMENT	ISOTOPE PRODUCED[a]	T 1/2[a]	RADIATION[a]	"ATOMIC" σ ac (barns)[b]	SATURATION (or % saturation in 1 month)[c]	SENSITIVITY (μg)	REFERENCES
Pr	Pr^{142}	19.3 hrs	β^-, γ	10		0.002	(1)
Nd	Nd^{147}	11 days	β^-, γ, e^-	0.258		0.1	(5)
Nd	Nd^{149}	1.7 hr	β^-, γ (?)	0.143		0.1	(5)
Sm	Sm^{153}	47 hr	β^-, γ, e^-	36		0.0006	(1)
Eu	Eu^{152}	9.2 hr	β^-, γ, e^-	659		0.00003	(1)
Gd	Gd^{161}	18-20 hrs	β^-, γ	0.9		0.02	(1)
Tb	Tb^{160}	3.9 hr	β^-	11		0.002	(5)
Tb	Tb^{160}	73.5-77.3 days	β^-, γ	22	24.7-26.3	0.004	(5)
Dy	Dy^{165}	145 min	β^-, γ	738		0.00003	(1)
Ho	Ho^{166}	27 hr	β^-	60		0.0004	(1)
Er	Er^{171}	7.5-12.0 hr	β^-, γ, e^-	0.994		0.02	(5)
Tm	Tm^{170}	127 days	β^-, γ	100	15.0	0.002	(5)
Yb	Yb^{175}	100 hr	β^-, γ	14.8	99.3	0.002	(5)
Yb	Yb^{175}	45 days	β^-	47	35.9	0.001	(11)
Lu	Lu^{176m}	3.67 hr	β^-	19.5		0.001	(5)
Lu	Lu^{177}	6.8 days	β^-, γ	91	95.2	0.0003	(1)
Hf	Hf^{181}	46 days	β^-, γ	3.51	34.2	0.02	(1)
Ta	Ta^{182}	117 days	β^-, γ, e^-	21	16.2	0.007	(1)
W	W^{187}	24.1 hr	β^-, γ, e^-	9.92		0.003	(1)
Re	Re^{186}	92.8 hr	β^-	37.44	99.5	0.0007	(1)
Re	Re^{188}	18.9 hr	β^-, γ, e^-	47.2		0.0006	(1)
Os	Os^{191}	15-17 days	β^-, γ, e^-	1.40	75	0.02	(1)
Os	Os^{193}	30-32 hr	β^-, γ	1.03		0.03	(1)
Ir	Ir^{192}	70-75 days	β^-, γ, e^-	285	25	0.0004	(1)
Ir	Ir^{194}	19-20 hrs	β^-, γ	80		0.0003	(1)
Pt	Pt^{197}	18 hr	β^-	0.28		0.1	(1)
Pt	Pt^{197}	3.3 days	β^-, γ	1.14	99.8	0.02	(1)

TABLE VIII (Cont'd)

ELEMENT	ISOTOPE PRODUCED[a]	T 1/2[a]	RADIATION[a]	"ATOMIC" σ ac (barns)[b]	SATURATION (or % saturation in 1 month)[c]	SENSITIVITY (μg)	REFERENCES
Au	Au^{198}	2.69 days	β^-, γ, e^-	96		0.0003	(1)
Hg	$Hg^{203,\ 205}$	45.8-51.5 days	β^-, γ, e^-	0.71	30-34.6	0.13	(1)
Tl	Tl^{204}	2.7 yr	β^-	2.25	2.0	0.6	(1)
Bi	Bi^{210}	5.0 days	β^-, α	0.015-0.055	98.4	0.5-2	(1)

+ for K measurements.

* for γ measurements.

Unless indicated, all others are for β^- measurements.

[ ] reference to radiation data.

Notes:

a. Unless otherwise indicated, this information appears in "Table of Isotopes," Seaborg, G. T., and Perlman, I., *Rev. of Mod. Phys. 20,* 585-667, (1948).

b. "Best" values used as indicated in literature references.

c. Unless otherwise indicated, saturation is to be assumed.

TABLE VIII REFERENCES

(1) Way, K. and Haines, G., *Tables of Neutron Cross Sections,* MonP 405 (Oct. 28, 1947).

(2) Overman, R. T. *et al.*, *Descriptive Manual of Radioisotopes Produced by Neutron Bombardment in the Clinton Pile,* ORNL 4 (April 5, 1948).

(3) Seren, L., Friedlander, H. N., and Turkel, S. H., "Thermal Neutron Activation Cross Section," *Phys. Rev.* 72, 888 (1948).

(4) Russell, B., Sachs, D., Wattenberg, A. and Fields, R. "Yields of Neutron from Photo-Neutron Sources*," *Phys. Rev.* 73, 547 (1948).

(5) Way, K. and Haines, G., *Thermal Neutron Cross Sections for Elements and Isotopes,* AECD 2138 (Feb. 29, 1948).

(6) Pomerance, H. S., personal communication (Jan. 13, 1950).

(7) *Chemistry Division Quarterly Progress Report for: Period Ending June 30, 1949,* ORNL 286 (Sept. 14, 1949); *Period Ending September 30, 1949* , ORNL 499 (Dec. 6, 1949).

(8) Pomerance, H. S., "Some Isotopic Neutron Absorption Cross Sections," *Phys. Rev.* 76, 195 (1949).

(9) *Physics Division Progress Report for the Quarter June, July, August, 1948,* ORNL 159, 22-23 (1948).

(10) Lee, J. C. and Pool, M. L., "Radioactive Tin 121, 123, 125," *Phys. Rev.* 76, 606 (1949).

(11) Way, K., Boyd, G. E. *et al.*, "1947 Summary of Nuclear Data," *Nucleonics* 2, 5b (1948).

(12) Seigbahn, K., "Radiation from 225-Day Ag^{110}," *Phys. Rev.* 75, 1277 (1949).

Assay of Various Radioisotopes (D. J. Coombe, T. H. Handley, G. W. Leddicotte, W. S. Lyon, R. H. Powell and S. A. Reynolds). Members of this group spend much of their time in developing methods for analyzing new radioisotopes and in carrying out such analyses until sufficient experience has been acquired and until routine production by the Operations Division has been assured. The analysis is then transferred to E. I. Wyatt's control group.

Recently a number of cyclotron-produced radioisotopes (Berkeley cyclotron, principally deuteron bombardments) have been processed at ORNL. One of these was Fe^{59} which was assayed by isopropyl-ether extraction followed by reading a suitable aliquot on the gamma ionization chamber. About 4% impurity was found, which fell in the hydrogen sulfide group of cations. This was presumably 130 d Sn produced from solder on the sample.

Cr^{51} was assayed by measurement of the gamma radiation, assuming that 100% of the K-capture disintegrations pass through the 0.33 Mev excited state, as given by Miller and Curtis.[24] This value for the disintegration rate may be low, because Bradt and others report that 97% of the K-capture processes do not pass through the excited state.[25] X-ray-gamma coincidence counting indicates that the scheme is almost certainly more complicated than indicated by Miller and Curtis.

The radiozirconium procedure previously reported[26] has been applied to analysis of a purified Nb preparation for about 1 part of Zr^{95} in 10^6 parts of Nb^{95}. Another application is in radiometric analysis of uranium samples thinly plated with zirconium. The samples were dissolved, a known amount of Zr^{95} tracer was added (carrier-free), the usual TTA extraction was performed, the Zr yield was determined by measuring the activity of the tracer recovered, and the inactive Zr recovery was measured colorimetrically. The measured inactive Zr, corrected for the tracer yield, gave the amount of Zr in the sample originally dissolved.

Procedures for radioisotope assay and determination of impurities will continue to be devised according to demand.

---

(24) Miller, L. C. and Curtis, L. F., "Beta- and Gamma-Ray Energies of Several Radioactive Isotopes*," *Phys. Rev.* 70, 983 (1946).

(25) Bradt, H. *et al.*, "Die radioaktive Umwandlung des Cr^{51}," *Helv. Phys. Acta.* 18, 259 (1945).

(26) *Chemistry Divison Quarterly Progress Report for Period Ending June 30, 1949*, ORNL 286, 226-7 (Sept. 14, 1949).

Analyses for Transuranic Elements (F. L. Moore). The Berkeley method for analysis for "oxidized" and "reduced" plutonium [Pu(VI), and Pu(III) + Pu(IV), respectively] has been found satisfactory for analysis of "Purex" samples, since these contain no aluminum. To carry 99.8% or more of the reduced Pu it is necessary to make two LaF_3 precipitations. These carry less than 0.2% of the oxidized Pu.

The method previously described[27] for breaking down Pu(IV) polymer by use of hydrofluoric acid has been used successfully by the control groups. A minor modification is the use of $Al(NO_3)_3$ for complexing the fluoride before extraction of the Pu with TTA. Boric acid was used previously.

For analysis for Np^{237} in the presence of uranium and plutonium the method given by Hindman *et al.*,[28] has been found successful in preliminary investigations. Briefly the procedure is: (1) Removal of nitrates by evaporation to small volume with HCL; [Np(IV) is oxidized by NO_3^-]; (2) Reduction of Pu to the trivalent state, and Np to the tetravalent; (3) Extraction of Np with TTA-Xylene solution.

Indentification Scheme for Radioelements (T. H. Handley). A simple scheme is being developed for identification of radioelements. In general the scheme for cations is: (1) Addition of one or more carriers for each of the conventional qualitative analysis groups, (a) acid, (b) hydrogen sulfide, (c) ammonium sulfide, (d) ammonium carbonate, (e) soluble; (2) Separation of the groups by addition of reagents and centrifugation, mounting samples for counting; (3) Determining by absorption and decay studies the radioactive properties of the elements falling in each group; (4) Assignment of element and isotope in each case by consultation of tables; (5) Confirmatory tests. Obviously, other tests must be used for anions.

A number of samples have been analyzed recently. Two examples follow: (1) The apparent beta activity in a U^{233} product was found to be due to Ru^{106} - Rh^{106} and conversion electrons and X rays from the uranium itself. (2) Activity in a filter was found to be almost pure Y^{91}.

Application of Ion Exchange to Radiochemical Analysis (W. A. Brooksbank). The remarkable separations possible by ion exchange methods have made it

(27) *Chemistry Division .... op. cit.*, p. 229.

(28) Magnusson, L. B., Hindman, J. C., and LaChapelle, T. C., *Chemical Methods for the Purification and Isolation of Neptunium*, ANL 4066 (1947).

apparent that there should be numerous applications in analytical chemistry.

Analysis of the rubidium carbonate sample previously mentioned was done by the following method.[29] The column contained a bed of 100-120 mesh IR-1 resin 25 cm long and 1.1 cm in diameter. After conversion to chloride the sample was adsorbed on the resin with a flow rate of 0.5 ml/min. The material was then eluted in the same medium. Beta activity of fractions was determined by counting appropriate aliquots and gamma activity by measurement of each fraction in the gamma ionization chamber. The elution curves are given in Fig. 8. (Beta activity is plotted on a log scale.) The amounts of Rb and Cs beta and gamma activities were determined by measurement of the areas under the elution curves.

Apparatus is now being set up for analytical separation of Pm from other rare earths.

Miscellaneous Activities

Decontamination Studies (T. H. Handley). Comparisons of various interior surfaces for buildings has been made with respect to two criteria, retention of activity which has been air-dried on the surfaces, and ease of removal of such retained activity by standard decontaminating solutions. A separate report will be issued.

Preparation of Cockroft-Walton Targets (R. A. Bolomey). Zirconium and uranium hydrides have been prepared. The zirconium is to be used as target material for the Cockroft-Walton accelerator.

Search for Zr^{88} (S. A. Reynolds). A sample of 1.7 mg of (presumed) ZrO_2 was submitted by H. S. Pomerance of the Physics Division. In the separation of Zr isotopes this material had been recovered from the calutron pocket which would have contained Zr^{88}. Spectroscopic analysis showed the presence of considerable Zr, as well as Al, Ca, Fe, etc.[30]

A sample containing ~0.5 mg of Zr was bombarded for 16 hours and a search was made for 80 h Zr^{89}, which emits 1 Mev positrons.[31] The total Zr activity

(29) Zaffarano, D., Kern, B., and Mitchell, C., "The Beta- and Gamma-Rays of Rb^{86}," *Phys. Rev.* 74, 682 (1948).

(30) Murray, M., personal communication (1950).

(31) Seaborg, G. T. and Perlman, I., "Table of Isotopes," *Rev. Mod. Phys.* 20, 585-667 (1948).

NOT CLASSIFIED
DWG. 8483

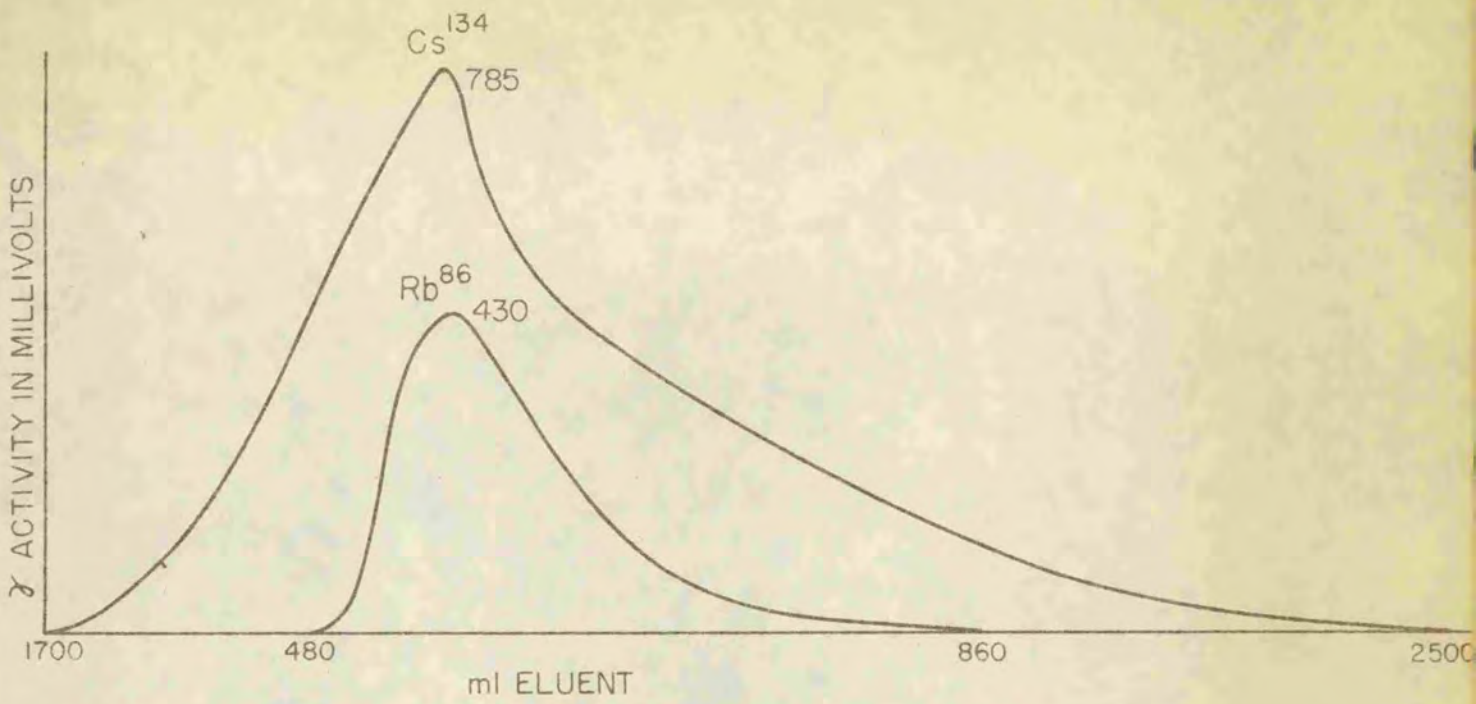

ELUTION CURVE - 0.1 N HCl
ACTIVITY MEASURED ON HIGH PRESSURE IONIZATION CHAMBER

FIG. 8

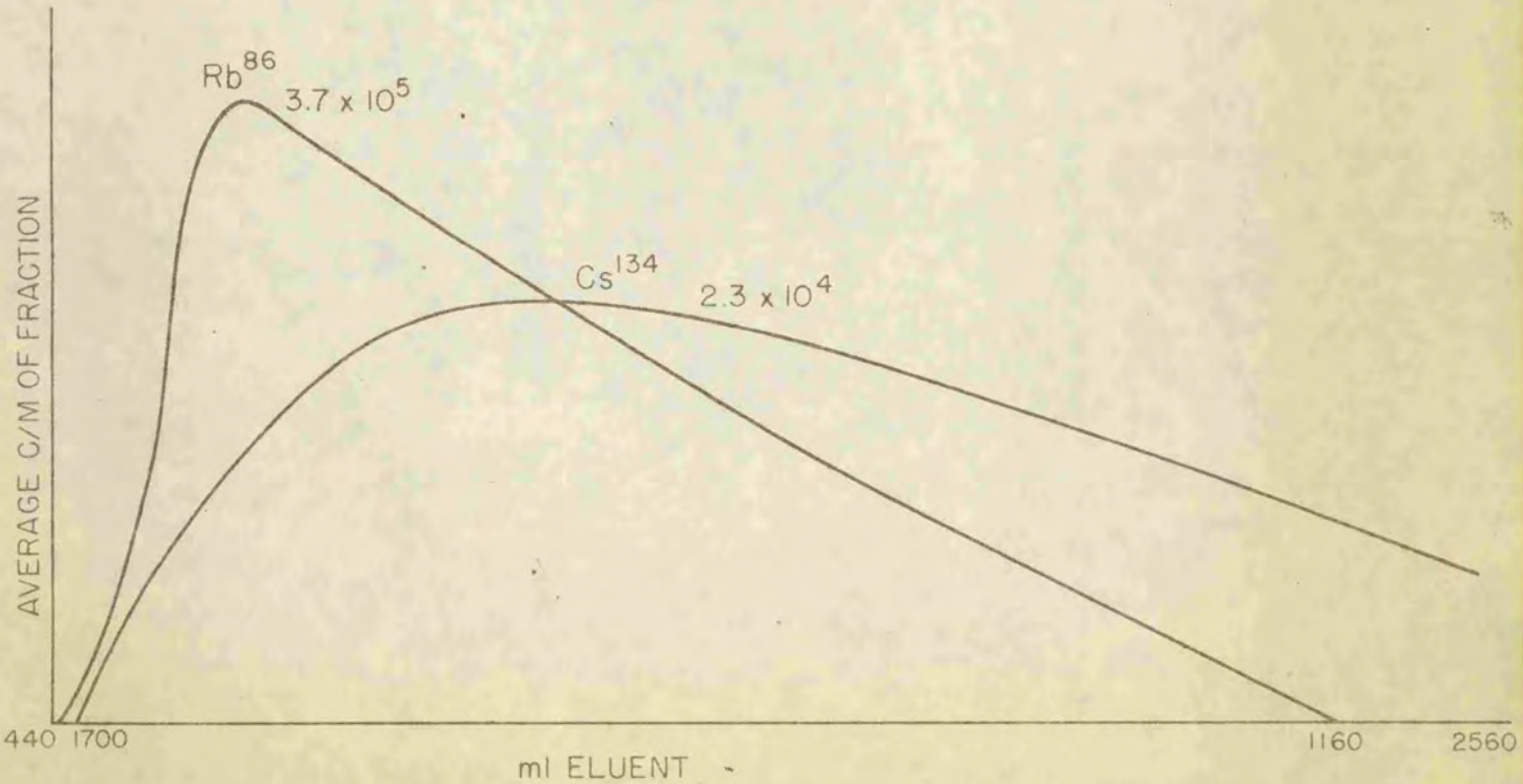

ELUTION CURVE - 0.1 N HCl - BETA ACTIVITY

found was $\sim 8 \times 10^2$ d/s. Using the equation

$$N\sigma = A/fs$$

the maximum value for $N\sigma$ for the sample was calculated to be $\sim 1 \times 10^{-8}$. If σ is assumed to be 10 barns, the maximum abundance of Zr^{88} in the sample would be $\sim 3 \times 10^{-2}$%. Since the Zr^{88}, if present, was enriched 25-100 fold,[32] the natural abundance of Zr^{88} would be 10^{-3} - 10^{-4}%.

Unless the remainder of the sample is desired for some other purpose, it will be bombarded for a considerable time and the Zr^{89} content, (if any) will be carefully determined, with calculation of a definite value for $N\sigma$.

Flux Determination by Use of Uranium Foils (W. A. Brooksbank). In an experiment performed in the ORNL reactor by members of the Naval Reactor Division of ANL, the flux was to be found by fission-product analysis of uranium foils. The nuclides selected were Sr^{89} and Ce^{144}. These were separated from other materials by the usual radiochemical methods;[33] the final precipitates were dissolved and diluted, and aliquots were taken for absolute beta counting. The flux was not calculated here, but agreement of results was checked by substituting in the equation

$$\frac{A_1}{Y_1\ S_1} = \frac{A}{Y_2\ S_2} ,$$

where A is activity (*e.g.*, d/m), Y is fission yield, and S is the saturation factor for the time of bombardment $(1-e^{-\lambda t})$. Results for Sr and Ce agreed within 2% when substituted in this equation.

(32) Weaver, B., communication to H. S. Pomerance.

(33) Hume, D. N. *et al.*, *Radiochemical Determination of Fission Product Activities*, CN 2815 (1945).

SPECTROCHEMICAL ANALYSIS—RESEARCH AND DEVELOPMENT

C. Feldman, M. Murray, A. Estepp, J. Gillespie

Due to the heavy load of routine analyses this quarter very little research and development has been possible. Work was begun on the preparation of a set of suggested methods in photographic photometry (as applied to spectrochemical analysis) for the American Society for Testing Materials. A rough draft has been completed for the introduction and two primary methods for calibrating emulsions. Topics yet to be covered are: Additional methods of primary calibration; secondary methods for calibration; methods for evaluating spectrochemical data, (1) intensity ratio, (2) curve separation, (3) Argyle and Price method; recommended practices in post-fogging and background correction.

Chemical procedures and spectrochemical working curves were developed for the following analyses by the porous cup technique.

(a) Determining 10 - 100 ppm of Ga and Ge in sulfuric acid solution in the presence of several mg Cu per ml (*i.e.* 1-10% Ga and Ge in Cu alloys). 100 ppm of Sn was used as the internal standard; the intensity ratios Ga 2944/Sn 3009 and Ge 3039/Sn 3009 were measured.

(b) Determining 10-200 ppm Pb in $HClO_4$ solution. 75 ppm Co was used as internal standard and the intensity ratio Pb 2833/Co 2663 measured.

ANALYTICAL SERVICE

In general, the demands for analytical service this quarter have been the heaviest of any period in the past year. This increase in load is only partly reflected in the increase in total analyses since changes in the types of analyses requested make this a rather inaccurate measure of the total work load.

Radiochemical Development Group. As in the past quarter, about 50% of the effort of this group is classed as service analysis. This includes examination of radioisotope target materials, analyses of radioisotopes not yet in routine production, and activation analyses.

Ionic Development Group. About 30% of the effort of this group is devoted to service analyses primarily for the Chemical Technology Division. These are primarily analyses where methods are being developed or where the necessary equipment is available only in this group.

Spectrochemical Analysis Group. The increased demand for quantitative rather than qualitative spectrochemical analyses has greatly increased the load of this group although the number of analyses completed is less than before. The present demand for service analyses is making it increasingly difficult to do any research or development work in this group.

General Radiochemical Group. The major load of this group continues to come from the Chemical Technology program and is unabated in volume.

General Ionic Group. The major demand for analyses in this group is coming from the Metallurgy Division and is now increasing as the Metallurgy program gets well under way.

Water Analysis Group. The demands for the type of analysis done by this group has increased in the past quarter and it is probable some personnel changes will have to be made to handle the increased load.

Lab and Semi-Works Control Group, Pilot Plant Control Group. These groups are now operating under a common supervisor, and the load is more equitably distributed than before. The demands in both groups continue to be heavy because of the increased program in Chemical Technology.

Radioisotope Production Control. This group has moved into more nearly adequate quarters in the 902 building. There was a considerable increase in the number of analyses completed despite a decrease in demand from the RaLa program.

TABLE IX

Summary of Service Analytical Work

(January 1 - March 30, 1950, Number of Analyses Reported)

		RADIOCHEM. DEV.	IONIC DEV.	SPECTRO-CHEM. GROUP	GENERAL RADIOCHEM. GROUP	GENERAL IONIC GROUP	WATER ANALYSES	LAB AND SEMI-WORKS CONTROL	PILOT PLANT	PRODUCTION CONTROL	TOTALS
PERSONNEL	TECH.	9	5	4	4	4	1	2	5	7	41
	NON-TECH.	3	2	-	7	1	4	13	19	18	67
DIVISION	BIOLOGY										73
	PHYSICS	50		10		*2	11				927
	CHEMISTRY	92	96	213	32	7	155	42	212	78	22,246
	TECHNICAL	236	95		5395	83	1091	8178	6059	1109	354
	METALLURGY		26	115		93	10	110			10,567
	OPERATING DIV.	295	18	212	2		27			10,013	216
	HEALTH-PHYSICS		2		214						526
	MISCELLANEOUS	518		8							34,909
	TOTAL	1,191	237	558	5643	185	1294	8330	6271	11,200	

*Time of 2/3 men spent on inorganic preparations for Physics Division.