CENTRAL RESEARCH LIBRARY
DOCUMENT COLLECTION

ORNL 690
Reactors
8A

[redacted]

DECLASSIFIED

CLASSIFICATION CHANGED TO:
BY AUTHORITY OF: TID-1117
BY: N. Johnstone 10-23-56

MARTIN MARIETTA ENERGY SYSTEMS LIBRARIES
3 4456 0360509 8

LABORATORY RECORDS
INV 55

SHIELDING REQUIREMENTS FOR THE MTR U^{235} CHEMICAL RECOVERY PLANT

OAK RIDGE NATIONAL LABORATORY
CENTRAL RESEARCH LIBRARY
CIRCULATION SECTION
4500N ROOM 175
LIBRARY LOAN COPY
DO NOT TRANSFER TO ANOTHER PERSON
If you wish someone else to see this report, send in name with report and the library will arrange a loan.
UCN-7969 (3 9-77)

OAK RIDGE NATIONAL LABORATORY
OPERATED BY
CARBIDE AND CARBON CHEMICALS DIVISION
UNION CARBIDE AND CARBON CORPORATION
UCC
POST OFFICE BOX P
OAK RIDGE, TENNESSEE

[redacted]

[redacted]

Report Number: ORNL-690

This document consists of 19 pages.
Copy 8 of 108 Series A.

Contract No. W-7405, eng 26

CHEMICAL TECHNOLOGY DIVISION

PROCESS DESIGN SECTION

SHIELDING REQUIREMENTS FOR THE MTR U^{235} CHEMICAL RECOVERY PLANT

H. E. Goeller

DATE ISSUED
JUN 12 1950

OAK RIDGE NATIONAL LABORATORY
Operated by
CARBIDE AND CARBON CHEMICALS DIVISION
Union Carbide and Carbon Corporation

Post Office Box P
Oak Ridge, Tennessee

[redacted]

MARTIN MARIETTA ENERGY SYSTEMS LIBRARIES
3 4456 0360509 8

0.0 Abstract

Shielding calculation for a chemical plant for recovering MTR irradiated fuel assemblies using the methyl isobutyl ketone solvent extraction process have been made.

1.0 Summary and Conclusion

The biological shielding requirements for protection from gamma radiation in the MTR U^{235} chemical recovery plant have been calculated for the several areas in which varying degrees of radioactivity are handled remotely. The areas studied include:

(1) The Chemical Area canal.
plant)

(2) The Chemical Area dissolver for the case of both three undissolved and dissolved assemblies.

(3) First cycle piping and columns.

(4) Second cycle aqueous waste equipment, first cycle solvent recovery equipment, and final product concentrated UNH solutions storage equipment.

(5) Laboratory cycle equipment.

It was assumed that the most active material to be handled will arise from a forty day irradiation (normal: twelve day irradiation) of MTR fuel assemblies at a total reactor power level of 30,000 kw. At this time the La^{140} gamma activity, the controlling gamma radiation for thick shielding, is at its maximum concentration and thus represents the most severe shielding condition. Although the 1200 Area operations will normally be done on assemblies cooled 100 to 150 days, it is conceivable that assemblies cooled only 50 days may be processed in an emergency; therefore, a 50 day minimum cooling period was assumed.

The shield thickness for water in the canal, for ordinary and high density concrete, and for iron and lead in special areas, were evaluated to give 10, 5, 2, and 1 mr/hr at the outside shield surface. It is recommended that the 1 mr/hr level be used as the minimum shield thickness in all cases. The thickness of the various shield media required to attain the 1 mr/hr radiation level are tabulated in Table I below.

[redacted]

Table I

Summary of Chemical Area Shielding Requirements to Attain a Radiation Level of 1 mr/hr. at Contact

	Shield Material and Thickness Required					
	Water	Regular Concrete	Barytes Concrete	Iron & Concrete	Iron	Lead
1200 Area Canal	15.0'	----	----	----	---	---
3 Assemblies in Empty Dissolver	----	5.00'	3.28'	2.30'	---	---
3 Assemblies in 1.8M Al Solution	----	4.66'	3.06'	2.14'	---	---
1st Cycle 5" Extraction Column	----	4.26'	2.80'	1.96'	---	---
1st Cycle 1" IPS in Pipe Tunnel	----	3.60'	2.37'	1.66'	---	---
1st Cycle Sampler or Pump	----	----	----	----	15.7"	9.7"
2nd Cycle Aqueous Raffinate Tank	----	1.84'	1.21'	0.85'	---	---
Laboratory Cycle Extractor						
50 day cooling	----	12.6"	----	----	---	---
100 day cooling	----	9.4"	----	----	---	---

Distance, source to observer without shielding for lab cycle, in air:

50 day cooling ~ 17'
100 day cooling ~ 10'

[redacted]

2.0 Introduction

The gamma-ray biological shielding requirements for the MTR U^{235} chemical recovery plant (Chemical Area) have been calculated for canal water shielding, cell concrete shielding, and iron and lead shielding. The following section summarizes the assumptions and methods used in these calculations. All shielding is designed to provide adequate radiation protection for personnel under the most severe conditions resulting from the normal operation of the MTR.

2.1 MTR Irradiation and Cooling

Under the present MTR operating specifications the enriched 25 fuel will be irradiated 12 days at a power level of 10 kw per gram of 25 (30,000 kw total power). However, it is possible that the MTR can be operated at 20 kw per gram of 25 for 12 days, or at 10 kw per gram of 25 for 20 days before assemblies must be discharged. Therefore, the shielding was not based on the anticipated 12 day irradiation at 30,000 kw total power, but on a 40 day irradiation at 30,000 kw, because at this time the La^{140} activity is a maximum, and is 50% greater than for a 12 day irradiation at 30,000 kw. It will be shown later that for moderate cooling and thick shielding the La^{140} gamma radiation is controlling for shielding requirements.

The canal water shielding was based on 10 day cooling since 10 day cooled assemblies may be stored in the Chemical Area canal. Under normal Chemical Area operations discharged MTR assemblies will be processed in 100 to 150 days after discharge. However, it is conceivable that fuel cooled as little as 50 days may require processing; thus the concreted shielding is based on 50 day cooled fuel.

2.2 Shielding and the Fission Product Spectrum

For fuel cooled either 10 or 50 days the 2.5 and 1.63 Mev gammas from La^{140} are the controlling radiations for biological shielding. Others of some importance are 2.0 Mev Eu^{156} gammas, which are about 5% of the La^{140} gamma intensity, and the 1.25 Mev Pr^{144} gammas. If all the other gamma radiation is treated as 0.8 Mev gammas, which is undoubtedly high, their contribution to the total gamma flux passing through heavy shields is of minor importance. Source strengths for one assembly are given in Table II below.

Table II

Gamma Activity of One MTR Assembly Irradiated 40 Days at a Total MTR Power Level of 30,000 kw

Gamma Source	% of Total Curies	Curies Watt	10 day Cooling			50 day Cooling		
			γ Curies	Watts	r/hr.	γ Curies	Watts	r/hr.
Total γ Activity	---	---	----	800	----	----	195	----
2.5 Mev La^{140}	6%	67.6	1.76×10^3	26	3.04×10^8	2.02×10^2	3.0	3.5×10^7
1.63 Mev La^{140}	77%	104	2.26×10^4	218	2.54×10^9	2.60×10^3	25.0	2.92×10^8
2.0 Mev Eu^{156}	60%	84.5	7.85×10^1	0.56	6.5×10^6	5.55	0.11	1.29×10^6
1.25 Mev Pr^{144}	100%*	134.6	4.10×10^3	30.4	3.56×10^8	3.71×10^3	27.6	3.22×10^8
0.8 Mev (All others)	---	---	----	525.	6.14×10^9	----	139.	1.62×10^9

* Some references give this activity the qualification of "weak intensity".

2.3 Methods of Calculation

All shielding thicknesses were calculated from the formula in chapter V, Volume II of the Clinton Project Handbook (CL-697). In all cases, several thicknesses of the shielding medium to be used were assumed and the emergent intensities of the La^{140}, Eu^{156}, Pr^{144}, and 0.8 Mev gammas were calculated. The total intensity was then obtained by summing the individual components, and was plotted on semi-log paper. Finally, the shield thicknesses required to reduce the source intensity to 1,2,5, and 10 mr/hr were read from the plot and tabulated in this report.

In all calculations except where noted a factor of 1.2 was used to compensate for forward scattering in the shielding. This factor was applied to all absorption coefficients by dividing each coefficient by 1.2. For heavy shielding this will undoubtedly give slightly greater shield thickness than are actually required ($\sim$10%), but since the effect of forward scattering is still not too well known, the use of the 1.2 factor is justified.

Methods of Calculation (cont.)

The absorption coefficients for the various gamma energies and shield materials considered for use in the Chemical Area are summarized in Table III below. The first set of values are coefficients obtained experimentally for thin shields and the second set corrected, as explained above, for forward scattering in thick shields. The values for concrete absorption coefficients were obtained by multiplying the coefficients for water at the energies concerned by the densities of the three concretes considered. Regular concrete was assumed to have a density of 2.3; barytes concrete, 3.5; and an iron and concrete mixture, 5.0.

Table III

Summary of Linear Absorption Coefficients for Various Gamma Energies and Various Shield Materials

A. Measured Absorption Coefficients cm^{-1}						
Gamma Energy	Water	Regular Concrete	Barytes Concrete	Iron & Concrete	Iron	Lead
2.5 Mev	0.042	0.100	0.152	0.218	0.29	0.48
2.0 Mev	0.048	0.112	0.170	0.244	0.31	0.51
1.63 Mev	0.054	0.125	0.190	0.272	0.34	0.57
1.25 Mev	0.063	0.145	0.220	0.315	0.38	0.68
0.80 Mev	0.078	0.180	0.274	0.391	0.48	1.02
B. Absorption Coefficients Corrected for Forward Scattering (All values above divided by 1.2).						
2.5 Mev	0.035	0.083	0.126	0.180	0.24	0.40
2.0 Mev	0.040	0.093	0.141	0.202	0.26	0.43
1.63 Mev	0.045	0.104	0.158	0.226	0.28	0.48
1.25 Mev	0.053	0.121	0.184	0.263	0.32	0.57
0.80 Mev	0.065	0.150	0.228	0.326	0.40	0.85

Specific Gravity of: Regular concrete = 2.3
Barytes concrete = 3.5
Iron and concrete = 5.0

2.4 Method of Presentation of Data

Pictorial presentation of data has been used to shorten the report and to give greater clarity. The geometry of each source studied and the relative position of the observer; the shielding thickness required to obtain 1, 2, 5, and 10 mr/hr at the observer; and the formula used in each calculation is given.

In all cases variations of the point source formula, $E_a = \frac{\mu S}{4\pi a^2} e^{-\sigma t}$ have been used, in which:

E_a = the gamma activity at the observer
S = total source strength
a = distance from source to observer
σ = linear absorption coefficient of shielding
t = thickness of shield

In most cases the exponential was obtained graphically from the F function charts in the Project Handbook.

The remainder of the report is divided into five sections devoted to the discussion of the following shielding problems.

1. Water shielding in the Chemical Area canal for fuel cooled a minimum of ten days and stacked vertically in an infinite array set by criticality limits in the bottom of the canal.
2. Three assemblies cooled 50 days in line in an empty dissolver.
3. First cycle aqueous solutions.
4. Second cycle aqueous solutions.
5. Laboratory cycle aqueous solutions.

3.0 Shielding of Assemblies in Chemical Area Canal

Irradiated assemblies, after a minimum of 10 days cooling in the MTR canal, will be delivered to the Chemical Area canal for storage and additional cooling prior to chemical processing. The water shield in the canal must be sufficient to reduce the γ activity to below tolerance. Shielding requirements for several assembly arrangements were calculated:

1. One assembly standing vertically
2. One assembly lying horizontally
3. An infinite array of assemblies stacked in bundles of four, with bundles 12" apart in both directions.
4. A single assembly raised 4' vertically above the array of conditions 3. This case is merely the sum of activities in conditions 1 and 3.

These four conditions are shown in Figure 1. The single assembly lying horizontally was calculated as a limited line source; the single assembly standing vertically, as a volume source. The array was calculated as an infinite slab source of uniform activity. In this case the real source activity was considered as distributed uniformly throughout the hypothetical slab. In all cases, the density of the source was assumed equal to the water of the shield.

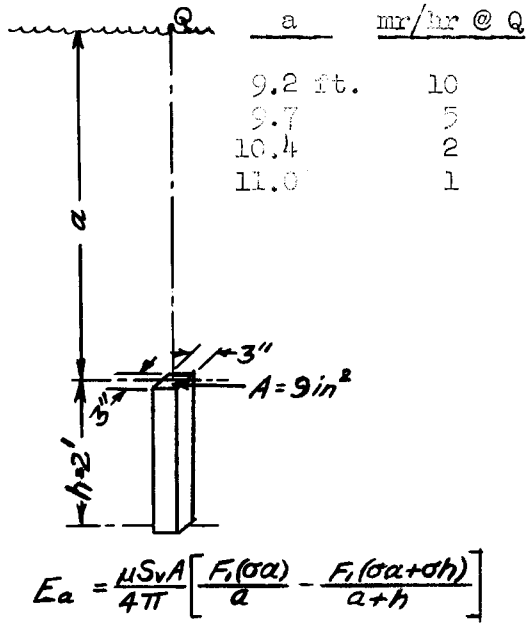

a	mr/hr @ Q
9.2 ft.	10
9.7	5
10.4	2
11.0	1

$$E_a = \frac{\mu S_v A}{4\pi}\left[\frac{F_1(\sigma a)}{a} - \frac{F_1(\sigma a+\sigma h)}{a+h}\right]$$

Condition 1

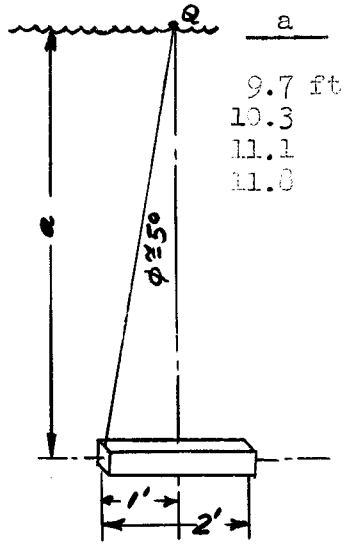

a	mr/hr @ Q
9.7 ft.	10
10.3	5
11.1	2
11.8	1

$$E_a = \frac{\mu S_L}{2\pi a} \mathcal{F}(\phi B)$$

Condition 2

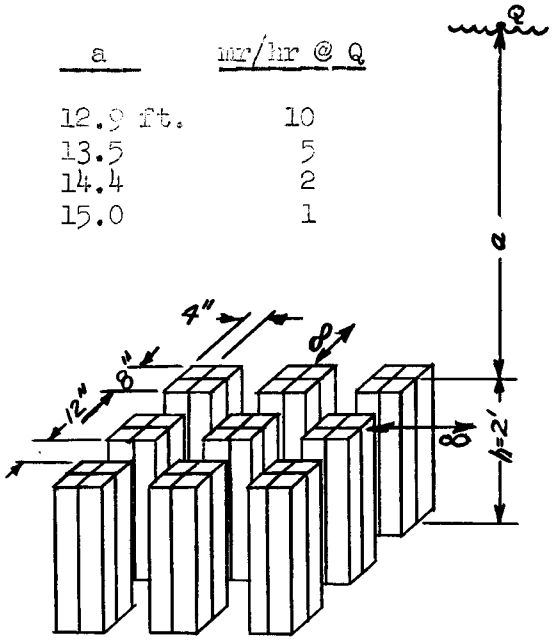

a	mr/hr @ Q
12.9 ft.	10
13.5	5
14.4	2
15.0	1

$$E_a = \frac{\mu S_v'}{2\nu}\left[F_1(\sigma a) - F_1(\sigma a+\sigma h)\right]$$

Condition 3

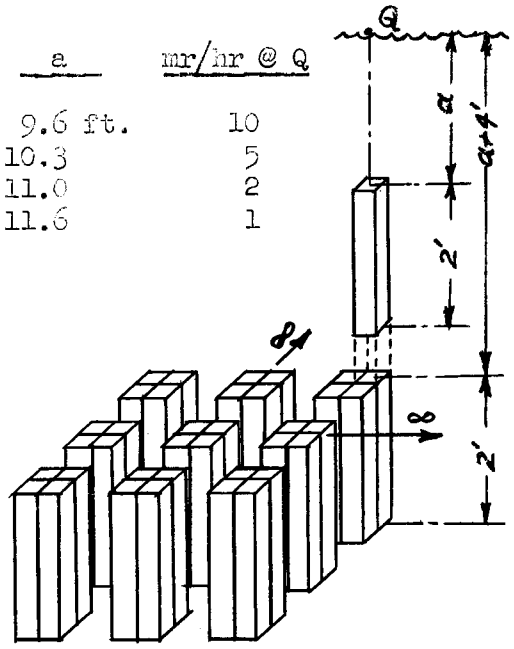

a	mr/hr @ Q
9.6 ft.	10
10.3	5
11.0	2
11.6	1

Formulae of Conditions 1 and 3

Condition 4

FIGURE I

Arrangement of Assemblies in Chemical Area Canal and Expected Activities at Q for Various Water Shield Thicknesses

4.0 Shielding of Three Assemblies in Empty Dissolver

Three assemblies must be loaded into empty dissolving vessel at the start of chemical processing. The thickness of concrete required to shield three assemblies arranged vertically in a plane parallel to the shield was calculated for the three type concretes being considered for shielding. The results of these calculations, and the geometry involved are given in Figure II.

This case was calculated as a single limited line source with three times the activity of an actual assembly. Self-shielding was neglected because the source is relatively thin.

Dwg.#8977

Thickness of:

Regular Concrete	Barytes Concrete	Iron & Concrete	mr/hr @ Q
4.14'	2.72'	1.90'	10
4.40'	2.89'	2.02'	5
4.74'	3.12'	2.18'	2
5.00'	3.28'	2.30'	1

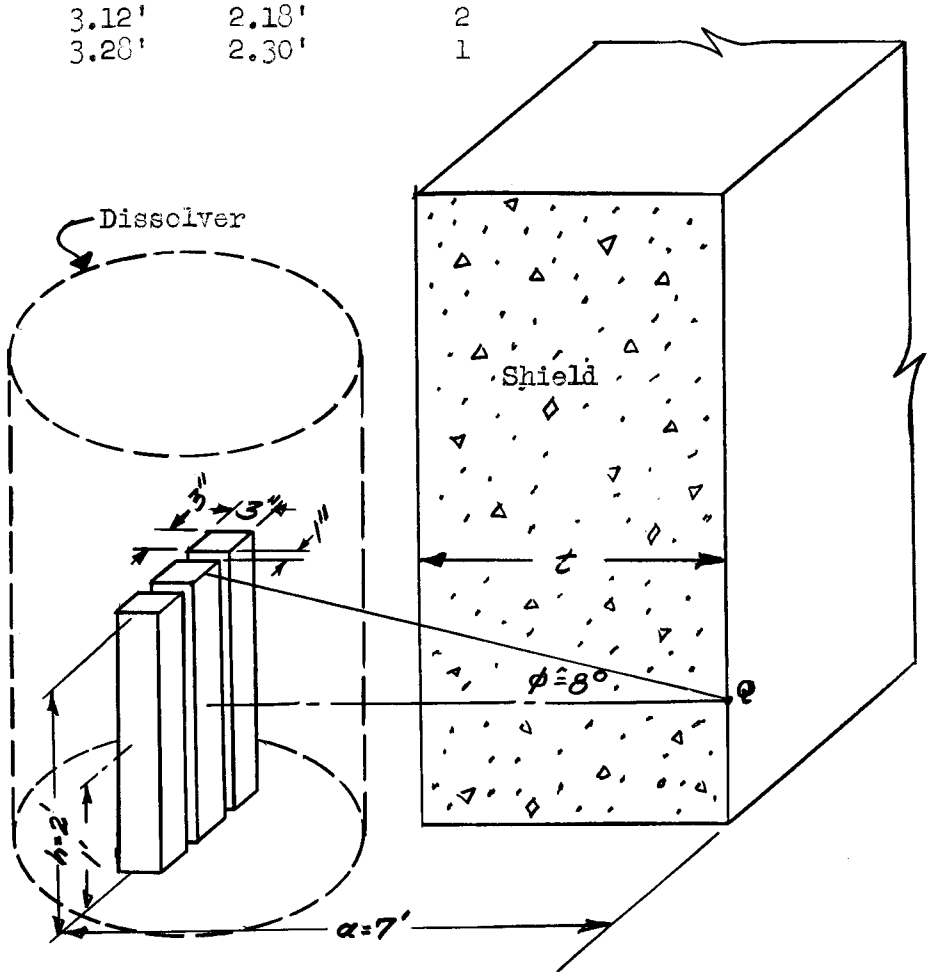

$$E_a = \frac{\mu S_L}{2\pi a} \mathcal{F}(\phi B)$$

For Regular Concrete, Sp. gr. = 2.3
For Barytes Concrete, Sp. gr. = 3.5
For Iron and Concrete, Sp.gr. = 5.0

FIGURE II

Concrete Shielding Required for 3 Assemblies in Line in Empty Dissolver

[redacted]

5.0 First Cycle Shielding Requirements

Three MTR fuel assemblies are dissolved in concentrated nitric acid to give about 80 gallons of solution. The process steps preceeding continuous extraction are all batch operations in which the solution volume may vary from 80 to 110 gallons, and the uranium concentration from 1.5 to 2.0 grams/liter.

Calculations indicate that the thickness of shielding required is nearly independent of feed concentration within the above limits, and is essentially independent of the ratio of tank height to diameter.

Several first cycle shielding conditions were studied; results are given in Figures III and IV. The conditions considered were:

1. Tank containing 80 gal. of feed solution (1.8 M in Al).
2. Columns of 2" to 5" diameter and of infinite length.
3. Pipes from 1/2" to 1-1/2" in diameter and of infinite length.
4. Pipes from 1/4" to 1/2" in diameter and one foot long.

Condition 1. is realized in pre-extraction and first cycle aqueous raffinate collection and evaporation equipment; condition 2. is specifically for columns and small diameter tanks; and condition 3. for pipes in pipe tunnels. Condition 4. is for samplers, hot pumps, etc., in cell blisters using iron or lead for the shield material. In conditions 3. and 4. the solution concentration was assumed to be the same as dissolver solution. In condition 2. for columns the solution concentration is only 40% that of dissolver solution because of the dilution introduced by the scrub and solvent.

The conditions of 2., 3., and 4., were previously calculated from adaptions of the formula $--E_a = B \frac{\mu S}{4\pi a^2} = e^{-\sigma t}$ in which B is $(\sigma t + 1)$ and σ is the absorption coefficient for thin shields, uncorrected for forward scattering. Furthermore, it was assumed that all La^{140} gamma activity was 2.1 Mev and that one gamma was emitted per disintegration. The shield thicknesses reported in Table II are 5 to 10% higher than those calculated by the usual method of this report.

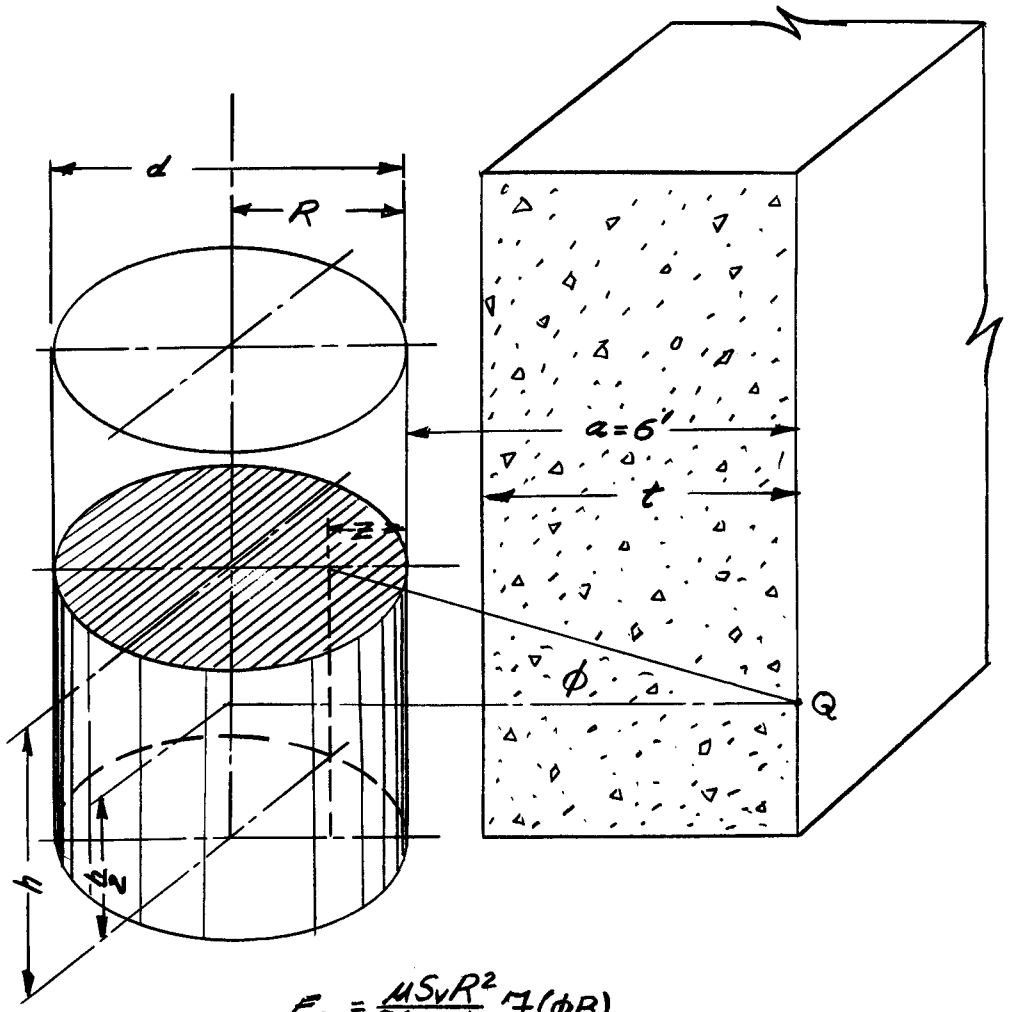

$$E_a = \frac{\mu S_v R^2}{2(a+z)} \mathcal{F}(\phi B)$$

Regular Concrete	Thickness of: Barytes Concrete	Iron & Concrete	mr/hr @ Q
3.85'	2.53'	1.77'	10
4.09'	2.68'	1.88'	5
4.42'	2.90'	2.03'	2
4.66'	3.06'	2.14'	1

R = 1'-0"; h = 3'-6" to 4'-10"

FIGURE III

Concrete Shielding Required for Solutions from 3 Assemblies in Dissolver

[redacted]

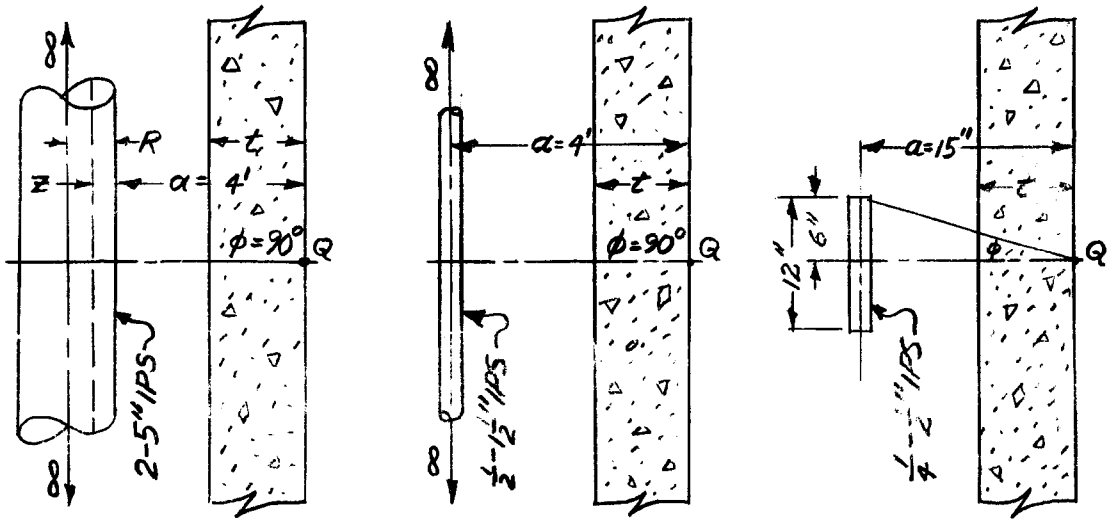

$E_a = \frac{B\mu S_v R^2}{2(a+z)} \mathcal{F}(\phi B)$ $\qquad$ $E_a = \frac{B\mu S_L}{2\pi a} \mathcal{F}(\phi B)$

Condition 2 $\qquad$ Condition 3 $\qquad$ Condition 4

Shield Thickness to Achieve 6 mr/hr.

	Regular Concrete	Barytes Concrete	Iron & Concrete	Iron or Steel	Lead
Condition 2 (~1/g U/L)					
2" IPS	3.12'	2.05'	1.43'	---	---
3" IPS	3.33'	2.19'	1.53'	---	---
4" IPS	3.51'	2.31'	1.61'	---	---
5" IPS	3.62'	2.38'	1.66'	---	---
Condition 3 (~ 2 g U/L)					
1/2" IPS	2.66'	1.75'	1.22'	---	---
3/4" IPS	2.84'	1.87'	1.31'	---	---
1" IPS	2.96'	1.95'	1.36'	---	---
1-1/2" IPS	3.20'	2.10'	1.47'	---	---
Condition 4 (~ 2 g U/L)					
1/4" IPS	---	---	---	11.6"	7.17"
3/8" IPS	---	---	---	12.3"	7.65"
1/2" IPS	---	---	---	13.0"	8.04"
Additional Thickness to obtain 1 mr/hr.	0.64'	0.42'	0.30'	2.7"	1.64"

FIGURE IV

First Cycle Shielding Requirements for Pipes and Columns.

6.0 Second Cycle Shielding Requirements

The main source of activity in the second cycle equipment will be the second cycle aqueous raffinate collection tank and evaporator since other sources will be more dilute and more distributed. For purposes of calculations, it was assumed that the first cycle gross gamma decontamination factor is 7×10^3 and that the aqueous raffinate volume is 1.2 times that of the first cycle feed. It was further assumed that this D.F. was the same for La^{140} and Pr^{144}. Thus second cycle unit activity is only 1.14×10^{-4} that of the first cycle feed.

Since the shielding required for this phase of the process is greater by only a small amount than that used in ordinary concrete structures, only the one case mentioned above has been calculated. However, it appears desirable to allow a large factor of safety because of the possibility of partial fission product break-through into the second cycle. The shielding requirements for the solvent recovery equipment are essentially the same as those for the second cycle.

The results of these calculations are given in Figure V for a first cycle decontamination factor of 7×10^3.

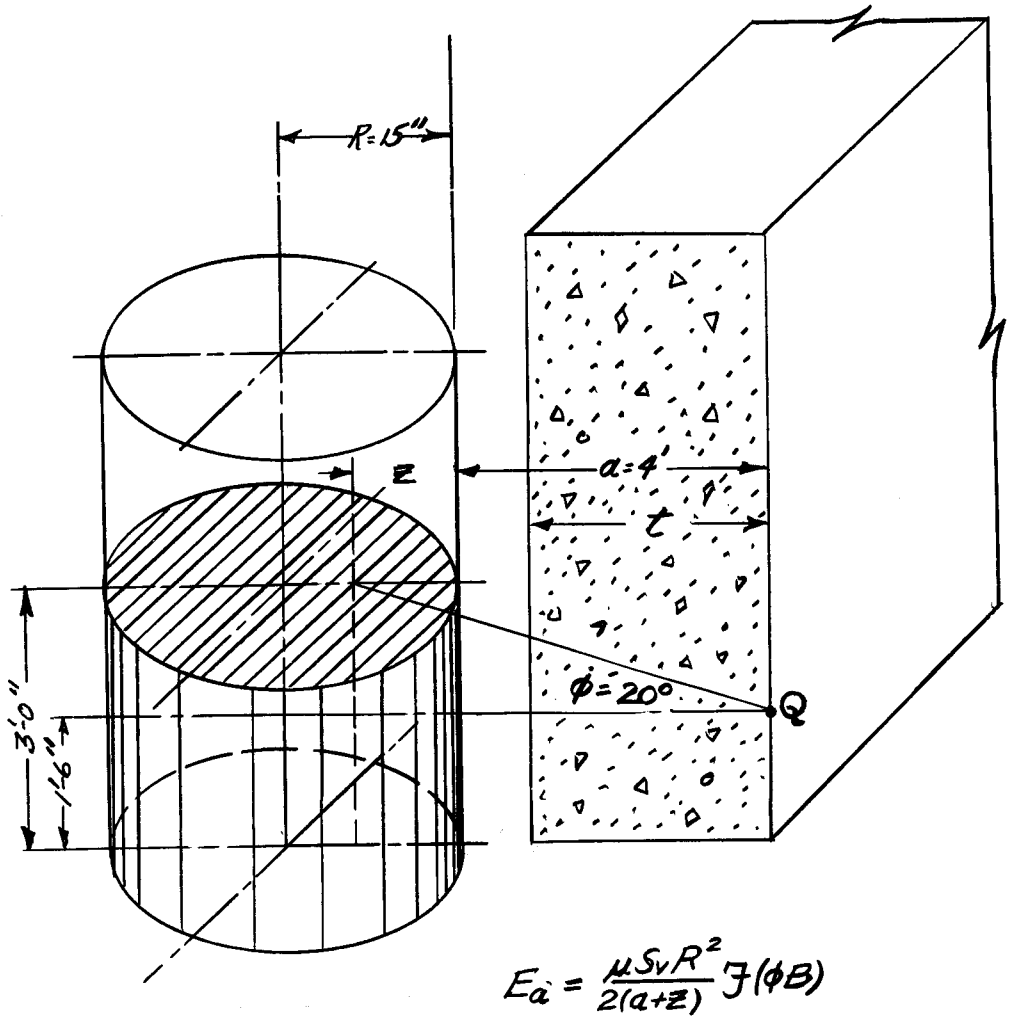

Thickness of:

Regular Concrete	Barytes Concrete	Iron & Concrete	mr/hr @ Q
1.20'	0.79'	0.55'	10
1.40'	0.92'	0.65'	5
1.65'	1.08'	0.76'	2
1.84'	1.21'	0.85'	1

FIGURE V

Concrete Shielding Required for Second Cycle Aqueous Raffinate Equipment

7.0 Laboratory Cycle Shielding

Following the second cycle operations the product UNH solution will be concentrated in the product evaporator to two liters per initial first cycle feed batch. In the second cycle the gamma decontamination factor expected is 2×10^2 giving and overall first and second cycle gamma decontamination factor of 1.6×10^6. However, in concentrating the final product solution to two liters, a volume reduction of 170 is achieved in reference to the initial first cycle feed. Thus when the decontamination factor and concentration are both considered, the reduction in unit gamma activity is only 10^4 or about the same as the second cycle raffinate. Consequently the shielding requirements for the second cycle product concentrate storage will be the same as for the second cycle raffinate equipment.

In the laboratory cycle, the batch size is 12.2 liters of UNH solution. Here, the volume, compared to the first cycle feed is 1/28th of the latter and the unit volume activity, therefore, only 6×10^{-4} times that of the first cycle feed. However, calculations indicate that either relatively thin shields or reasonable distance without shielding will suffice to reduce the activity to tolerance. Figure VI presents the results of the laboratory cycle shielding requirements for both 50 and 100 day cooling.

Finally, a laboratory cycle decontamination factor of 10^2 to 10^3 will reduce the residual activity of the product uranium to below background for U^{235}.

H. E. Goeller

H. E. Goeller

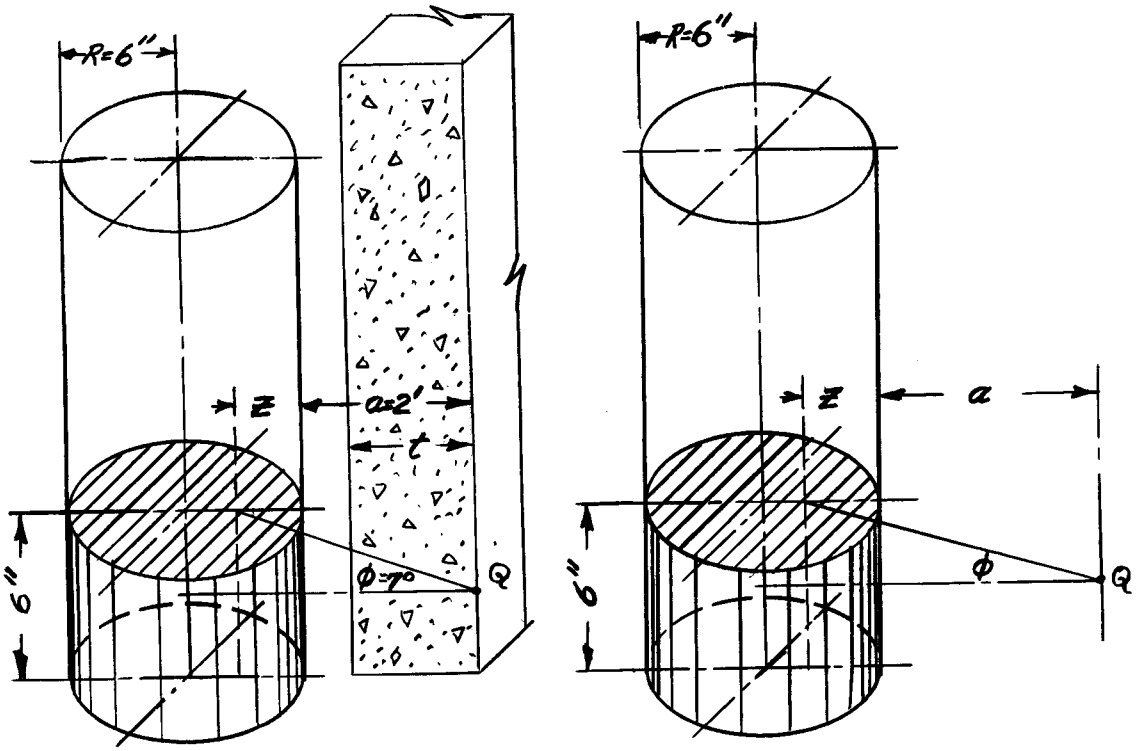

$$E_a = \frac{\mu S_v R^2}{2(a+z)} \mathcal{F}(\phi B)$$

Shielded Source

$$E_a = \frac{\mu S_v R^2}{2(a+z)} \phi$$

Unshielded Source

50 day Cooling

Regular Concrete	mr/hr @ Q	a	mr/hr @ Q
5.4"	10	2'	78
7.5"	5	3'	35
10.4"	2	4'	20
12.6"	1	5'	12.5
		17'	1.0

100 day Cooling

2.8"	10	2'	33
4.6"	5	3'	14
7.3"	2	4'	5.3
9.4"	1	10'	1.0

FIGURE VI

Shielding Requirements for Laboratory Cycle Batch Extraction Equipment

[redacted]