CENTRAL RESEARCH LIBRA
DOCUMENT COLLECTION

[redacted]

ORNL-428 & Errata

PHYSICS-GENERAL

74

LABORATORY RECORDS
1954

CLASSIFICATION CHANGED TO: DECLASSIFIED
BY AUTHORITY OF: TID-1112
BY: N Johnstone 10/22/56

MARTIN MARIETTA ENERGY SYSTEMS LIBRARIES
3 4456 0360547 2

CANADIAN MEASUREMENTS OF AN IRON-WATER SHIELD

OAK RIDGE NATIONAL LABORATORY
CENTRAL RESEARCH LIBRARY
CIRCULATION SECTION
4500N ROOM 175
LIBRARY LOAN COPY
DO NOT TRANSFER TO ANOTHER PERSON
If you wish someone else to see this report, send in name with report and the library will arrange a loan.
UCN-7969 (3 9-77)

OAK RIDGE NATIONAL LABORATORY
U.S. ATOMIC ENERGY COMMISSION

OAK RIDGE NATIONAL LABORATORY
OPERATED BY
CARBIDE AND CARBON CHEMICALS CORPORATION
FOR THE
ATOMIC ENERGY COMMISSION

OAK RIDGE, TENNESSEE

[redacted]

[redacted]

ORNL-428

This document consists of 12 pages. Copy 7 of 116, Series A.

Contract No. W-7405, eng 26*

ORNL SUMMER SHIELDING SESSION

Gale Young, Leader

CANADIAN MEASUREMENTS OF AN IRON-WATER SHIELD

E. P. Blizard

Date Issued:

JAN 3 1950

OAK RIDGE NATIONAL LABORATORY
Operated By
Carbide and Carbon Chemicals Corporation
for the
Atomic Energy Commission
Post Office Box P
Oak Ridge, Tennessee

*Explanation on Page 3.

[redacted]

[redacted]

[redacted]

[redacted]

MARTIN MARIETTA ENERGY SYSTEMS LIBRARIES

3 4456 0360547 2

This report is one of a series on shielding and represents part of the work of a summer group working principally at Oak Ridge National Laboratory. Participants are drawn from Nuclear Development Associates (Navy contract), NEPA, Bureau of Ships and Bureau of Aeronautics (Navy Department), AEC, RAND, General Electric, Argonne and Oak Ridge National Laboratory.

These reports are issued through ORNL on Contract No. W-7405, eng. 26.

CANADIAN MEASUREMENTS OF AN IRON-WATER SHIELD

E. P. Blizard

The material for this report was gathered by the author and Dr. F. L. Friedman on a trip to the Chalk River Laboratory of the National Research Council of Canada, July 18 and 19, 1949. Discussions were limited on classified subjects to low power reactors and reactor materials.

The Chalk River reactor is cylindrical in shape, with the axis vertical, and the shielding is of two types, divided into three regions. The sides are of ordinary concrete since access holes to the experimental facilities are all located in this region, and a thick shield is no disadvantage if these holes are to be well-separated from one another at the outside face.

On the top and bottom, however, a thin shield is important since the fuel is handled in the form of long vertical rods whose overall length, with cooling connections, must be at least equal to the outside vertical dimension of the reactor plus shield. In these two regions the shield was built of alternate layers of metal and hydrogenous material in an effort to conserve space. Since these faces open into water-connection rooms which are not occupied during pile operation, it was apparently considered sufficient to reduce the neutron level so that no excess radioactivity would be built up in the room. The gamma ray and slow neutron intensities in these rooms during pile operation were each measured to be about one hundred times tolerance.

A thick lead (about 6 inches) canopy which covered about a quarter of the shield outer area could be rolled to various positions under the reactor. The purpose of this device was to reduce the intensity of gamma radiation during pile operation so that workers could enter the sub-pile room. This canopy, however,

was found to be essentially useless, since it reduced the gamma intensity only by a factor of two. This is a remarkable demonstration of the importance of multiply scattered gamma radiation.

Description of Upper and Lower Shields:

The shield that was measured is the iron-water laminated shield underneath the NRX (Chalk River) reactor. This shield covers the base of the cylindrical reactor, is consequently flat, and is best approximated analytically as "plane source, plane slab shield", since the lateral dimensions are greater than the vertical shield thickness.

The material in this shield, reading from reactor callandria out was as follows:

3" Al + H_2O	(10% H_2O)
5" Air	
4" Fe	(start of shield proper)
6" H_2O	
4" Fe	
6" H_2O	
4" Fe	
6" H_2O	
4" Fe	
6" H_2O	
8" Fe	
6" Masonite	
2" Pb	
11/64" Fe	

The iron and water section is referred to as a thermal shield because it is designed to remove the heat due to radiation. The attenuation data is confined to this section. The shield is pierced by approximately 200 tubes which form the lower part of the reactor fuel assemblies. These are on a triangular lattice arrangement with 6-3/8" spacing. The tube diameters are stepped at a point 22" from the inner iron face. Typical cross sections of the tubes are shown in Figure 1. The outer iron ring (2-5/8" dia. to 1-7/8" dia. in upper section) is cast as an integral part of the iron slabs. The iron filler within the tube makes a spiral of 1-1/2 turns in 48" and extends only for that distance.

Discussion of Data:

Annuli:

Although one might at first suspect that the annular air spaces between tubes would have a noticeable effect on the observed attenuations, simple geometrical (isotropic flux, inverse square) considerations show that the attenuation down the straight lengths of annuli is about 100 to 1000 greater than that observed for neutrons through the shield. Thus, for the neutrons at least, the effect of these annuli is a negligible perturbation. This is borne out in the measurements, since no noticeable change in neutron attenuation occurs at the shield thickness where the steps occur. (Figure 2). The gammas are probably not much affected by streaming either, since the unperforated part of the shield probably attenuates gammas less than it does neutrons.

Method of Detection:

Neutron measurements within the shield were made by Dr. B. W. Sargeant, using indium and gold foils. Cd differences were taken on both detectors. For the experiment, the central fuel tube in the shield was replaced by one in which lengths of

iron and masonite corresponded to the iron and water of the shield. The foils were inserted in transverse slots in this tube. Clearance between tube and hole was kept to about 1/32". Data is shown in the appended Revised Table 1 for PM-288 and illustrated in Figure 2.

The characteristic rise in thermal flux (bare foil) readings in the hydrogenous media is quite pronounced, and a slight rise in the cadmium covered foils indicates that the slowing down to resonance also occurs predominantly in the water. The general trend of shield performance is indicated by comparison between readings of foils with identical "immediate neighborhoods", since the ratio of thermal to fast is strongly dependent on the slowing-down characteristics of the material.

Dr. Hugh Carmichael of the Chalk River Laboratory was kind enough to have some measurements made in the sub-pile room of gamma, slow neutron, and fast neutron intensities. These were carried out by A. C. Gladwin of their Health Radiation Branch, and the following quotation is from Dr. Carmichael's letter of August 8, 1949, on the work:

> "Three type T.P.A. ion-chambers were used; # 28 containing argon at 20 atmospheres for gamma radiation; #39 containing hydrogen at 20 atmospheres for gamma radiation plus fast neutrons and # 81 containing boron trifluoride at 20.7 cms. Hg. for slow neutrons.
>
> "The ion-chambers were placed in a row about 30" above the floor of the room under the pile, approximately under the center of the pile. The positions of the argon and hydrogen chambers were interchanged in two sets of measurements.

"The performance of the ion-chambers was checked with a radium standard after use.

"The reactor was running at 17.7 Mw. during the tests.

"The intensity of gamma radiation was found to be 1.1 $\pm$ 0.1 r per hour.

"The slow neutron flux as measured by boron trifluoride after subtracting the current due to the above intensity of gamma radiation (five per cent of the total amount) was 1.75×10^4 nv.

"There was a small excess current in the hydrogen-filled ion-chamber, less than one twentieth of the total current, and this was possibly due to fast neutrons, but this difference from the current expected from the gamma radiation is some ten times as great as that from slow neutrons."

Discussion of Results:

Neutrons:

The first thirty inches of iron-water shield shows a fairly constant relaxation length of about 5.0 cms., which compares quite favorably with that of other iron-hydrogen shields. Although Borst reports 4.8 cms. for the corresponding measurement in a Hanford shield prototype, other measurements* showed about 6 cms. relaxation length for the more comparable case in which the first hydrogenous layer follows only 3" of Fe instead of 10-1/2" as in the actual shield and in

---

* ORNL-32

DECLASSIFIED
CLASSIFICATION CHANGED TO:
BY AUTHORITY OF: TID-1112
BY: N Johnstone 12-22-58

ERRATUM TO ORNL-428

This document consists of 1 pages.
Copy 7 of 116 copies. Series A

[redacted]

To: To. School Library

From: E. P. Blizard

Subject: ERRATUM TO ORNL-428

It has been pointed out by Mr. R. T. Jaske, Hanford Engineer Works, that the figures given in the comparison of the Chalk River and Hanford Shields, are reversed. Please correct Page 9 of your copy of this report as follows:

	Initial Iron Layer, Inches	Composition, gm mols/liter Fe	H	O	C	Density, gms/cc
Chalk River	4"	56	67	33	--	3.72
Hanford	$10\frac{1}{2}$"	64	42.3	21.7	26.5	4.27

E. P. Blizard

E. P. Blizard

EPB/lwb

[redacted]

Thi[redacted]
de[redacted]
194[redacted]

[redacted]

[redacted]

Borst's prototype. It should be noted, however, that the Hanford shield uses masonite instead of water as its hydrogenous medium, and consequently introduces an appreciable concentration of carbon. A comparison of the two shields follows:

Notice

	Initial Iron Layer, Inches	Composition, gm mols/liter Fe	H	O	C	Density, gms/cc
Chalk River	4"	64	42.3	21.7	26.5	3.72
Hanford	$10\frac{1}{2}$"	56	67	33	--	4.27

Beyond thirty inches, the relaxation length indicates is quite definitely greater than 5 cms., and this is probably to be attributed to the changing shield composition, since hardening of the spectrum should be more gradual and therefore would be exhibited in the first part of the shield.

Gamma Rays:

As the gamma ray intensity at the inner shield face is not adequately known, it is very dangerous to make any statement concerning the gamma attenuation of this shield. Furthermore, Gladwin's data is taken for attenuation of a rather special shield involving three components (Fe, Pb, H_2O), and this is not directly comparable to other work.

Dr. 7436

[redacted]

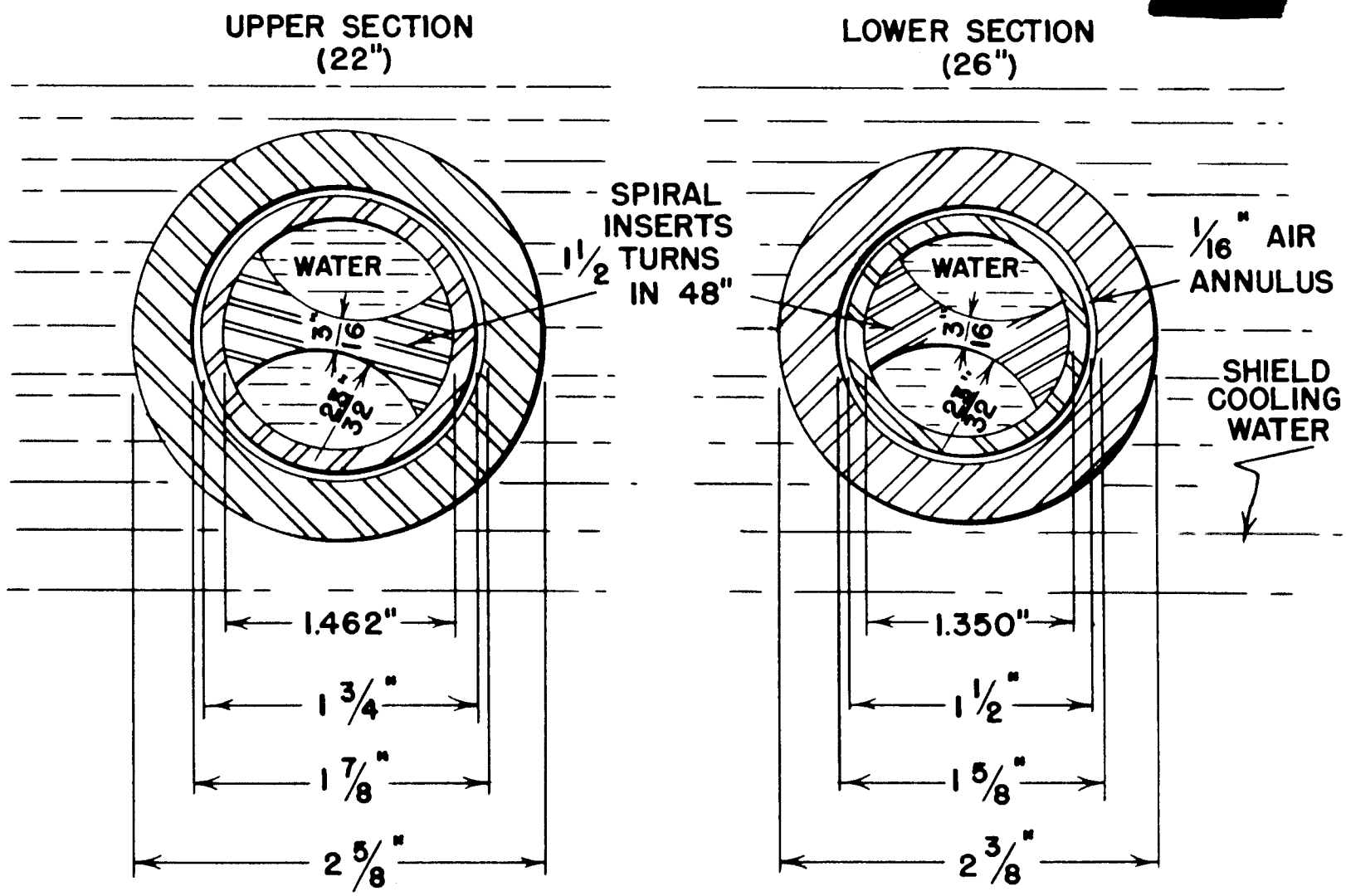

FIG. 1

TYPICAL SECTIONS, TUBES
THROUGH WATER LAYER OF SHIELD
UNDER NRX-1 PILE

[redacted]

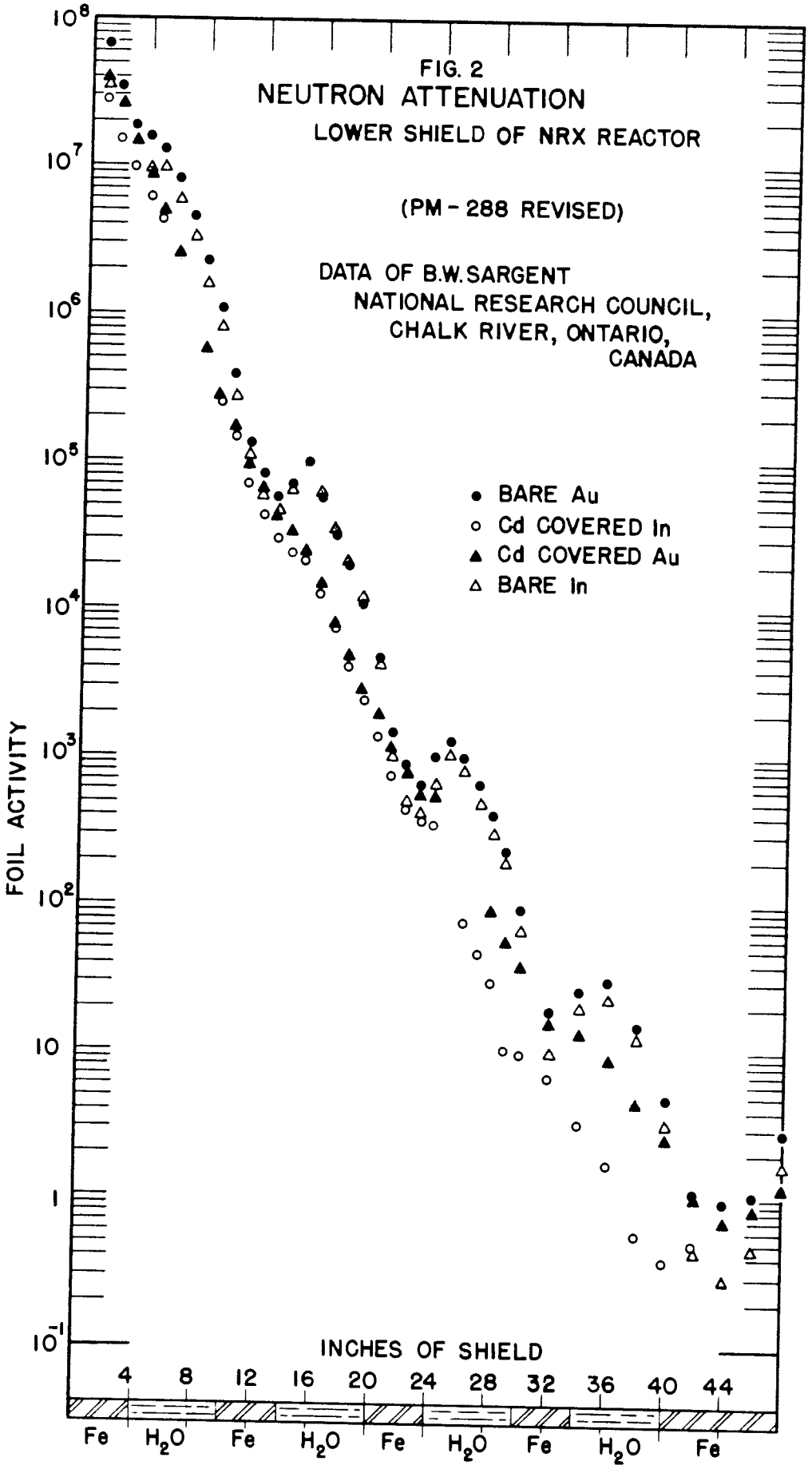
FIG. 2
NEUTRON ATTENUATION
LOWER SHIELD OF NRX REACTOR
(PM - 288 REVISED)
DATA OF B.W. SARGENT
NATIONAL RESEARCH COUNCIL,
CHALK RIVER, ONTARIO,
CANADA
BARE Au
Cd COVERED In
Cd COVERED Au
BARE In
FOIL ACTIVITY
10^8
10^7
10^6
10^5
10^4
10^3
10^2
10
1
10^{-1}
INCHES OF SHIELD
4 8 12 16 20 24 28 32 36 40 44
Fe H_2O Fe H_2O Fe H_2O Fe H_2O Fe

[redacted]

ORNL-428
OAK RIDGE NATIONAL LABORATORY
Central Files Number
49-8-121 (COPY)

REVISED TABLE I FOR PM-288

Position Number	Inches from Top of Plug	Activity In Without Cd	Activity In + Cd	Activity Au without Cd	Activity Au + Cd
1	1	37,200,000	27,500,000	68,500,000	40,400,000
2	2	15,300,000	15,100,000	34,800,000	26,200,000
3	3	9,890,000	9,260,000	19,300,000	14,600,000
4	4	9,710,000	6,000,000	16,000,000	8,780,000
5	5	9,480,000	4,270,000	13,350,000	4,970,000
6	6	5,880,000	-	8,110,000	2,560,000
7	7	3,230,000	-	4,420,000	-
8	8	1,590,000	-	2,260,000	559,000
9	9	795,000	260,400	1,074,000	286,000
10	10	280,000	147,800	394,000	175,000
11	11	110,700	69,600	136,100	96,900
12	12	57,700	42,900	80,500	64,800
13	13	42,500	29,500	57,300	41,400
14	14	64,600	25,000	69,200	33,100
15	15	92,400	21,500	96,500	24,200
16	16	57,700	13,100	57,400	14,200
17	17	34,600	7,840	33,600	8,120
18	18	20,700	4,090	19,900	4,700
19	19	11,240	2,450	11,300	2,860
20	20	4,530	1,540	4,610	1,907
21	21	1,000	733	1,558	1,155
22	22	489	464	882	771
23	23	422	377	744	573
24	24	657	356	1,003	500
25	25	1,000*	(1,000* In without Cd)	1,369	-
26	26	803	74.9	1,000*	(1,000* Au without Cd)
27	27	504	48.4	645	-
28	28	301	29.9	405	91.5
29	29	188	9.86	231	58.2
30	30	65.3	9.40	93.0	39.2
31	32	9.72	6.65	19.4	15.8
32	34	19.6	3.12	27.2	13.5
33	36	22.5	1.76	30.0	8.64
34	38	12.2	0.54	15.1	4.32
35	40	3.13	0.38	4.76	2.46
36	42	0.43	0.47	1.15	1.00
37	44	0.28	0.86	0.92	0.69
38	46	0.46	-	1.01	0.81
39	48	1.73	-	2.82	1.19

* Monitoring foil

July 18, 1949
Chalk River, Ontario

MEMORANDUM TO: Col. C. A. Nelson

FROM : B. W. Sargent
Atomic Energy Project
National Research Council

BWS/dg

COPY

[redacted]

/s/ B. W. Sargent