UNCLASSIFIED

MARTIN MARIETTA ENERGY SYSTEMS LIBRARIES
3 4456 0360566 8

ORNL-590
Instrumentation

FAST NEUTRON CONTINUOUS MONITOR AND SURVEY METER

OAK RIDGE NATIONAL LABORATORY
CENTRAL RESEARCH LIBRARY
CIRCULATION SECTION
4500N ROOM 175
LIBRARY LOAN COPY
DO NOT TRANSFER TO ANOTHER PERSON
If you wish someone else to see this report, send in name with report and the library will arrange a loan.
UCN-7969 (3 9-77)

OAK RIDGE NATIONAL LABORATORY
OPERATED BY
CARBIDE AND CARBON CHEMICALS DIVISION
UNION CARBIDE AND CARBON CORPORATION
UCC
POST OFFICE BOX P
OAK RIDGE, TENNESSEE

UNCLASSIFIED

UNCLASSIFIED

Report Number - ORNL-590
This document consists
of 16 pages.
No. 7 of 139 copies.
Series A.

Contract W-7405-eng-26

FAST NEUTRON CONTINUOUS MONITOR AND SURVEY METER

by

R.J. Farber

Health Physics Division

DATE ISSUED

MAR 21 1950

OAK RIDGE NATIONAL LABORATORY

operated by

CARBIDE AND CARBON CHEMICALS DIVISION
Union Carbide and Carbon Corporation
Post Office Box P
Oak Ridge, Tennessee

MARTIN MARIETTA ENERGY SYSTEMS LIBRARIES

3 4456 0360566 8

UNCLASSIFIED

Internal Distribution

1. G. T. Felbeck (C&CCC)
2-3. 706 A Library
4. 706 B Library
5. Biology Library
6. Health Physics Library
7-8. Training School Library
9-12. Central Files
13. J. A. Swartout
14. J. H. Gillettee
15. A. Hollaender
16. J. H. Frye, Jr.
17. E. J. Murphy
18. A. M. Weinberg
19. C. N. Rucker
20. W. D. Lavers
21. J. S. Felton
22. K. Z. Morgan
23. F. Western
24. C. E. Center
25. G. S. Hurst
26. W. M. Hurst
27. W. H. Jordan
28. E. P. Blizard
29-33. R. J. Farber

External Distribution

34-41. Argonne National Laboratory
42. Armed Forces Special Weapons Project
43-44. Atomic Energy Commission, Washington
45. Battelle Memorial Institute
46-53. Brookhaven National Laboratory
54. Bureau of Medicine and Surgery
55. Bureau of Ships
56-59. Carbide & Carbon Chemicals Corporation (K-25)
60-63. Carbide & Carbon Chemicals Corporation (Y-12)
64. Chicago Operations Office
65. Cleveland Area Office
66. Columbia University (Dunning)
67. Columbia University (Failla)
68. Dow Chemical Company
69-74. General Electric Company, Richland
75. Idaho Operations Office
76-77. Iowa State College
78. Kansas City
79-82. Knolls Atomic Power Laboratory
83-85. Los Alamos
86. Mallinckrodt Chemical Works
87. Massachusetts Institute of Technology (Gaudin)
88. Massachusetts Institute of Technology (Kaufmann)
89-91. Mound Laboratory
92-93. National Advisory Committee for Aeronautics
94-95. National Bureau of Standards
96-97. Naval Radiological Defense Laboratory
98-99. NEPA Project
100. New Brunswick Laboratory
101-103. New York Operations Office
104. North American Aviation, Inc.
105. Patent Advisor, Washington
106. Rand Corporation
107. Sandia Base
108. Sylvania Electric Products, Inc.
109-123. Technical Information Branch, ORE
124. U. S. Public Health Service
125. UCLA Medical Research Laboratory (Warren)
126-130. University of California Radiation Laboratory
131-132. University of Rochester
133. University of Washington
134-135. Western Reserve University (Friedell)
136-139. Westinghouse

FAST NEUTRON CONTINUOUS MONITOR AND SURVEY METER

by

R.J. Farber

Abstract

This report describes an instrument designed for the dual functions of a continuous duty fast neutron flux monitor, and a fast neutron survey meter. The monitor sets off an alarm when the fast neutron flux exceeds a pre-set tolerance level. The survey meter is provided with a count rate meter giving a direct indication of the neutron flux at the counter. This meter has full scale calibrations of 50, 1000 and 10,000 neutrons/cm^2/second. When used with neutrons in the energy range 0.2 to 10 Mev, the system will respond to neutrons only discriminating against gamma radiation up to intensities of 5 to 10 R per hour.

General Description

The instrument consists of a probe and a power supply chassis, connected by a 12 foot length of cable. Contained in the probe are the recoil proton proportional counter, amplifier, pulse counting circuits for both monitor and survey functions and the indicating meter for survey purposes. The power supply chassis contains the low voltage supply, an RF oscillator-type high voltage supply to develop 2200 V

for the counter, and the monitor alarm control tube and relay. Figure 1 shows the system in block diagram.

Probe and Amplifier Considerations

The proportional counter has been described[1]. The models presently in use produce about 7 pulses per second when subjected to a flux of 100 neutrons/cm^2/ second from a Po-Be source. The Po-Be emission spectrum is normally assumed to have a 4 Mev average, and the proper correction factor must be applied when working with other neutron sources. Figure 4 shows the theoretical relative response as a function of neutron energy.

The amplifier consists of two 6AK5's, coupled with an RC time constant of 2.2 μ seconds (47 $\mu\mu$f and 47 K ohms), and with an upper half power bandwidth of .5 mc. The relative frequency response of these circuits is shown in Figure 2. The absolute gain at the peak of the frequency response characteristic (200 kc) is about 280 or 49 db. This is sufficient to amplify the lowest useful recoil proton pulse to the order of 2 volts.

---

(1) Hurst, G.S., Fast Neutron Measurement for Health Physics, RA-DET, Vol. 2, No. 4, September 1949.

The "usefulness" of a low amplitude proton pulse is closely connected with the degree of gamma rejection desired. The maximum energy a single gamma photon can lose in the counter is 80 kev. Neutrons above 80-100 kev will produce pulse spectra that extend above the amplitude of the maximum gamma pulse. As a result, by counting only those pulses that exceed a given voltage level, a measure of neutron flux can be had without interference from gamma radiation. In strong gamma fields, however, the photons are spaced quite closely in time, and the resultant pulses may tend to pile up to produce a pulse equal to or greater than that due to the recoil protons. Differentiating the signals from the counter tends to eliminate this pile up of gamma pulses. For a given gamma intensity, there will be an optimium differentiating time constant to eliminate spurious gamma counts from the neutron count. A faster time constant will provide negligible improvement, for once most of the gamma pulses have been separated into isolated pulses by differentiating further differentiation serves only to attenuate the gamma and neutron pulses at the same rate. This is so because the pulses due to both gamma and recoil protons have the same shape and now differ only in amplitude. A slower time constant of course, will permit gamma pile-up and confuse the neutron count reading.

For example, when a 1.7 mg Radium source (encased in a 0.5 mm wall platinum tube) was placed against the proportional counter wall, no difference was observed in the neutron counting rate whether a 2.0 or 0.2

microsecond coupling time constant was used. The pulse height selector was reset just above the gamma pulse level in each case to take care of changes in overall system gain. A slower coupling time constant resulted in a 15% loss in neutron pulse count when the pulse height selector was re-adjusted to provide gamma rejection.

This means that if sufficient gain and rise time are available from the amplifier, the coupling time constant can always be reduced to increase the gamma rejection with no deterioration of neutron counting efficiency. The limit to this process is reached when the differentiating time constant is of the order of the rise time of the pulse. Notice also that for a given differentiating time constant, improved gamma rejection may be had by increasing the pulse height selection level (or decreasing the overall gas and/or amplifier gain). This will allow for some pile-up at a higher gamma flux. The rejection, however, is achieved at a loss in neutron counting efficiency. The magnitude of the loss may be calculated from Figure 3, which was measured using the circuit of the neutron monitor and an external pulse height selector. For these particular conditions, if the effective pulse height selection level is raised one volt in the normal operating range, the neutron count decreases to slightly less than 80% of its former value. It is interesting to note that the neutron curve (Curve I) of Figure 3 appears as a straight line on semi-log paper over a large portion of its range.

The output of the amplifier is fed to a standard single-shot multivibrator, or univibrator. The constants of this circuit are so arranged that it takes approximately a 2-1/4 volt pulse to trigger. This level is controlled by the sizes of the plate-grid coupling resistor and the grid resistor of the right hand (normally off) tube ($T-4_b$). The pulse produced by this stage is of 80 volts peak amplitude and last approximately 225 μ seconds. This is somewhat longer than is usually employed and will result in a slight departure from linearity on the 10,000 neutron/cm^2/sec range. The long pulse was used to provide greater output at low flux densities in the monitor channel by giving the unusually large coupling capacitor more time to charge and discharge. The departure from linearity is due to the fact that at high counting rates, a significant number of pulses will fall in the dead time of the system following a previous pulse. At the 10,000 neutron/cm^2/sec reading this amounts to a loss of about 20% of the count[2].

The pulse counting circuits are of standard design. In the survey channel, the diodes are polarized to produce a negative voltage output. When this is done, the diode current due to contact potential can be made to balance the positive ion grid current of the voltmeter so that there is not change in grid potential when the range scale (which controls the resistance through which this current must flow) is changed.

---

(2) Elmore and Sands, "Electronics; Experimental Techniques", McGraw-Hill, New York (1949)

The bias on the diodes is adjusted with this critereon in mind. The output of the monitor pulse counter is fed as a voltage above ground to the relay control tube in the power supply chassis.

Power Supply Chassis

A "red" tube (type 5692 dual triode) is used for the monitor alarm control. The output of the pulse counter in the probe controls the plate current (which flows through the relay) in the first section, while the second section is used to adjust the firing level and stabilize the system against heater or supply voltage changes. The coupling circuit between the pulse counter and the control grid is a low pass RC filter. As this exhibits a rather long time constant, a reset button is provided which grounds the grid through 47,000 ohms, thereby discharging the network in a relatively short time. The reset also serves to open the alarm circuit so that the "break" of the 117^{V} alarm load is taken up across the switch rather than the relay contacts. The resistance in the grid reset circuit is to insure that the AC circuit is opened before the plate current falls and the relay contacts open.

The RF oscillator high voltage supply has an output of 3500 volts with the full 150 V applied to the oscillator. For proper operating potential on the proportional counter (approximately 2200 V) the supply voltage is of the order of 100 volts. The oscillator runs at a frequency of about 200 kc which is relatively simple to filter, and the 200 kc

ripple signal offers no problem in the system. The low voltage supply of 300 volts is controlled by two VR-150 regulators. To economize on current drain and reduce heating in resistive elements, the total DC load was "stacked" so that some circuits operate between + 150 volts and ground, while others between ground and - 150 volts. Those circuits requiring 300 volts operate across the entire supply.

Calibration

Since the monitor is intended for continuous duty, a generous warm-up period of at least several hours should be allowed before calibration is attempted. Both gamma and neutron sources are needed for the calibration process.

After warm-up, the counter is placed in a strong gamma field of 5 to 10 R/hour (this should be the maximum gamma level the instrument will be required to discriminate against). The high voltage to the counter should be adjusted (varying the gas amplification of the counter) until the count meter shows no response on the 50 neutron scale. This should occur at about 2200 volts. With no radiation at the probe, the "zero" adjustment should be made and locked. The probe now is placed in a field of 50 neutrons/cm^2/sec and the "CAL" control adjusted until the meter exhibits an average deflection of full scale. The reading at various other fluxes may now be checked, but the system should now be in calibration over all ranges.

The highest range (10,000 neutrons/cm^2/sec) may read as much as 20% low at a full scale reading. Other than this there should be no deviation from linearity. Over a period of operation, the "zero" control may require re-adjustment. When this is done, it will have practically no effect on the scale calibration.

To calibrate the tolerance alarm, the probe is placed in a tolerance neutron field (60 neutrons/cm^2/sec for 2 mev neutrons is the present 8 hour daily tolerance) and the screwdriver control on the power supply chassis adjusted until the relay trips. The probe count rate meter appears to present some loading on the alarm circuit, so the monitor adjustment should be made with the probe set for 50 neutrons full scale. The probe will normally be left in this condition unless an actual survey is being performed. If the calibrating neutron source does not have the same energy spectrum as the flux in which the system is to be used (e.g., if calibration is done with a Po-Be source while the instrument is to be used in connection with a pile) a correction will be necessary to allow for the variation in counter sensitivity with energy level of the neutrons. Figure 4 shows the relative response of the proportional counter against neutron energy and may be used to make this correction.

General Operating Notes

The proportional counter contains a lining of paraffin or tristearin, both of which have relatively low melting points. Both materials must be operated at temperatures below 65°C. The proportional counter is mounted so that it will receive a minimum of heat from the probe chassis. With the probe placed on top of the power supply, the proportional counter shows a heat rise of about 15°C after several hours of operation. No trouble should be encountered from counter heating in any normal ambient.

A desirable recalibration cycle would be once a week. Measurements show that the monitor should not drift more than ± 5% in a week, but it would be unwise to trust it for longer periods than that.

R. J. Farber
Instrument Development Research

RJF/rr

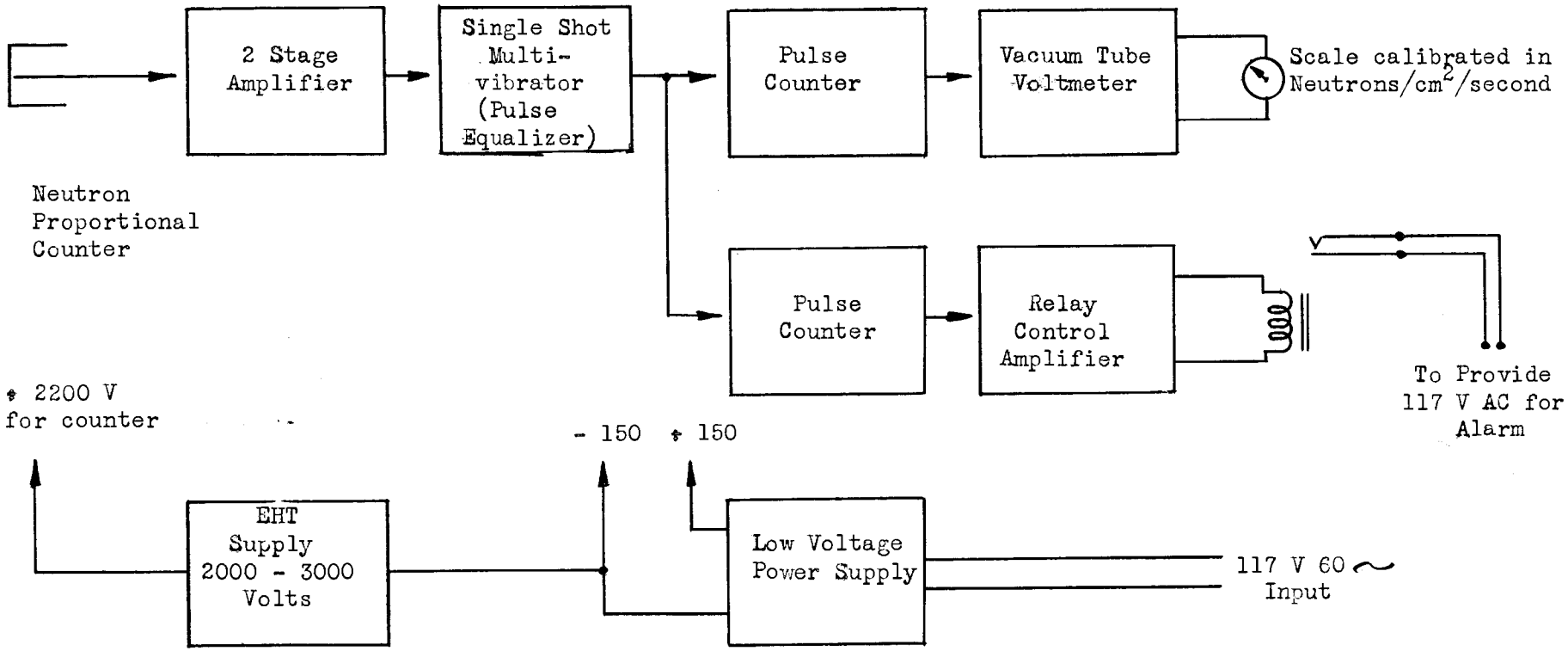

Figure 1

Block Diagram

24 Hour Fast Neutron Flux Monitor and Survey Meter

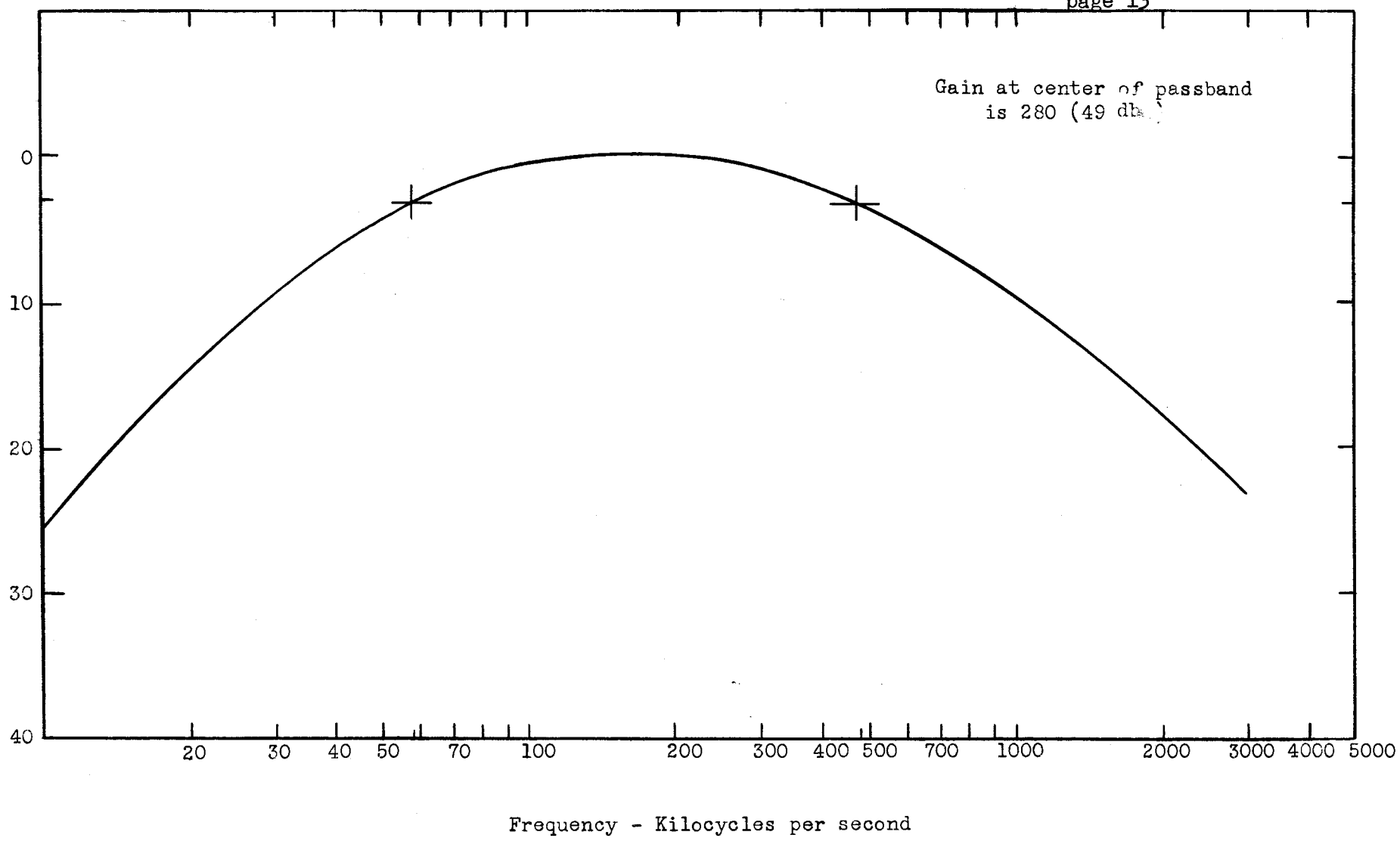

Figure 2
Response Characteristic of Amplifier

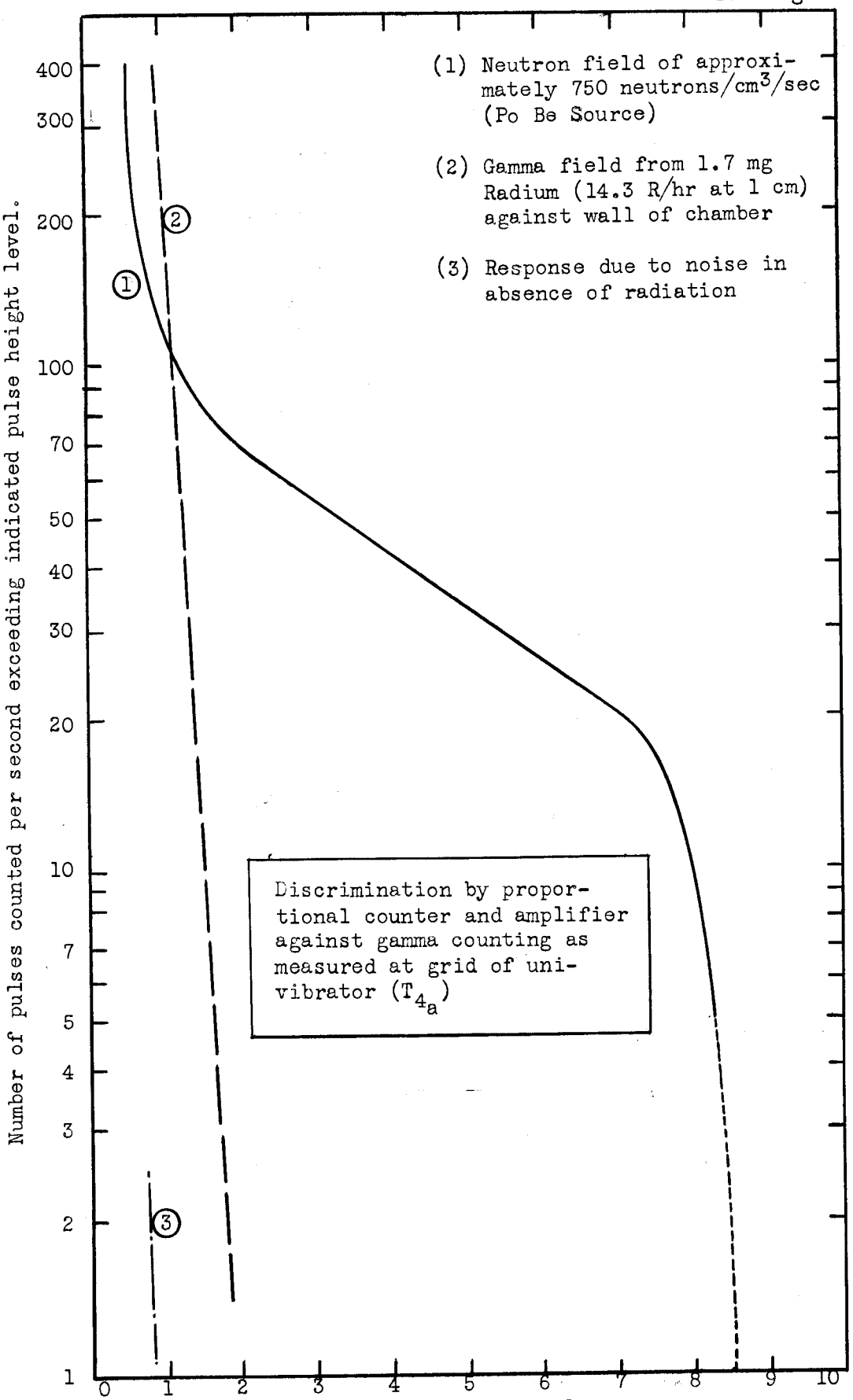
(1) Neutron field of approximately 750 neutrons/cm³/sec (Po Be Source)
(2) Gamma field from 1.7 mg Radium (14.3 R/hr at 1 cm) against wall of chamber
(3) Response due to noise in absence of radiation
Discrimination by proportional counter and amplifier against gamma counting as measured at grid of univibrator (T_{4_a})
Number of pulses counted per second exceeding indicated pulse height level.
400
300
200
100
70
50
40
30
20
10
7
5
4
3
2
1
0
1
2
3
4
5
6
7
8
9
10
Pulse Height Level

Figure 3

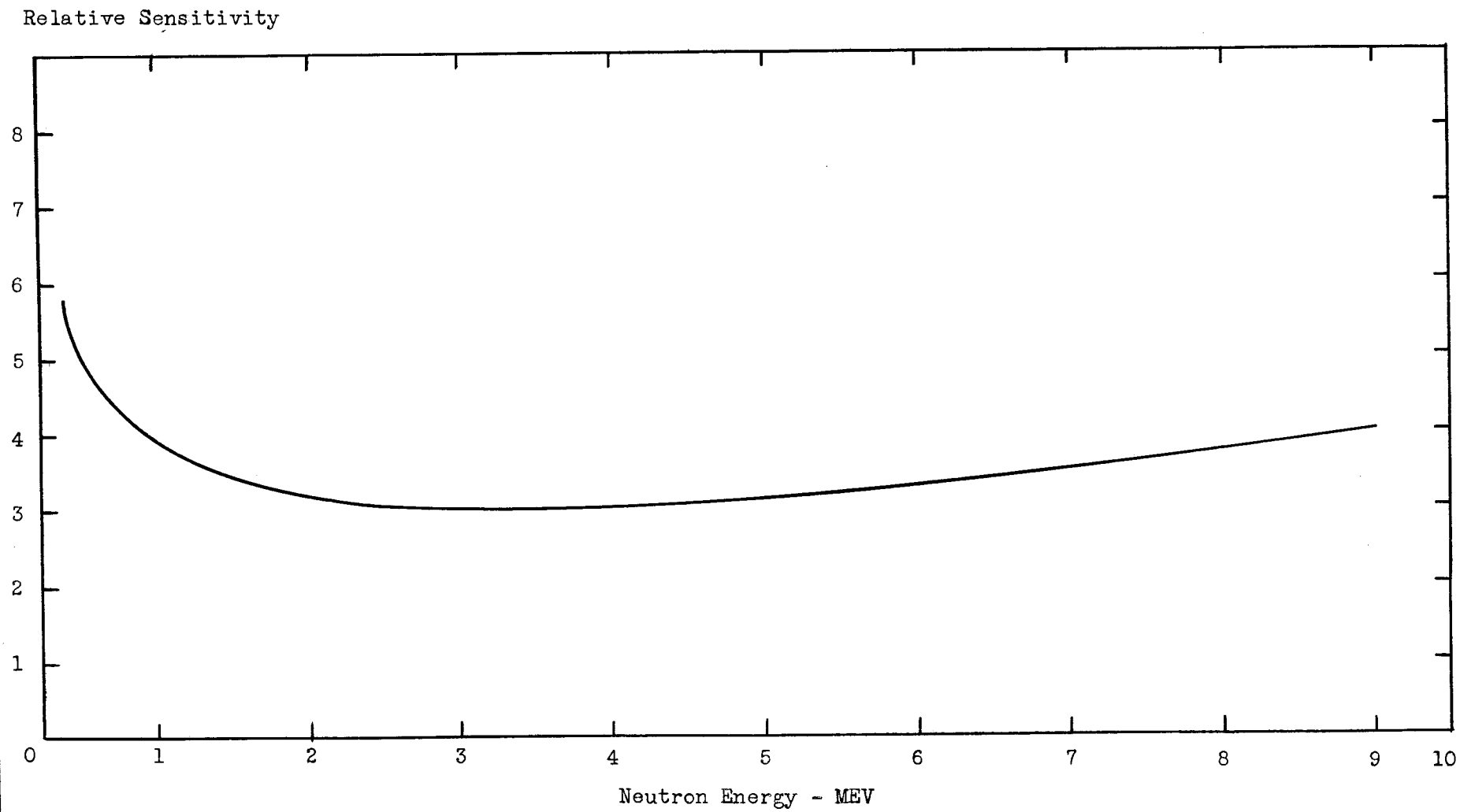

Figure 4

Relative Sensitivity vs Neutron Energy for Proton Recoil Proportional Counter
(Model described in Report ORNL-485)

MATERIALS LIST

ITEM NO.	DWG. NO.	QTY.	NAME	SIZE	MATERIAL

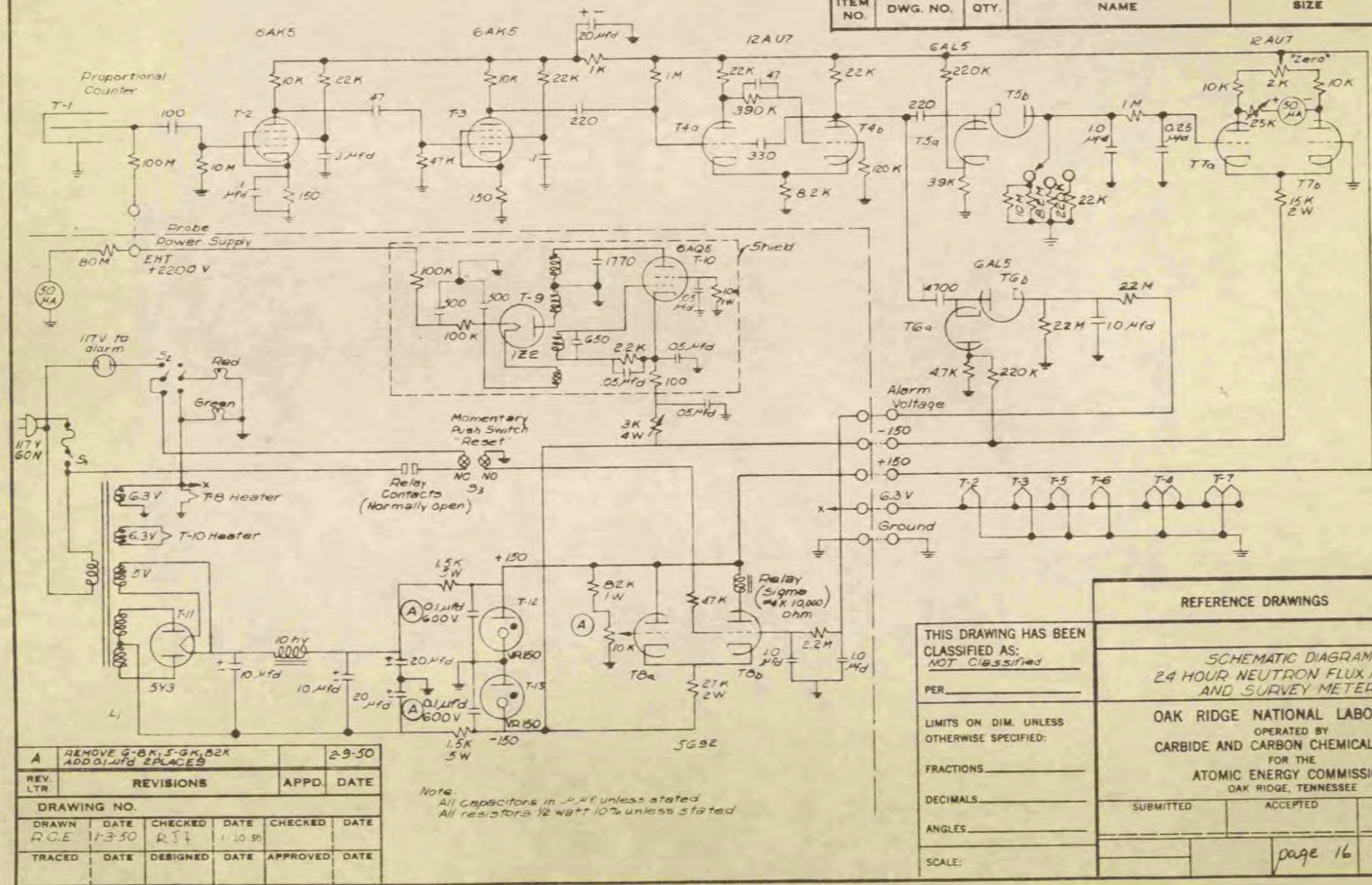

A	REMOVE G-8K, 5-GK, 82K ADD 0.1 μfd 2 PLACES		2-9-50
REV. LTR	REVISIONS	APPD.	DATE

DRAWN	DATE	CHECKED	DATE	CHECKED	DATE
R.C.E	1-3-50	R.J.T.	1-20-50		
TRACED	DATE	DESIGNED	DATE	APPROVED	DATE

DRAWING NO.

Note:
All capacitors in μμf unless stated
All resistors 1/2 watt 10% unless stated

THIS DRAWING HAS BEEN CLASSIFIED AS: NOT Classified

PER

LIMITS ON DIM. UNLESS OTHERWISE SPECIFIED:

FRACTIONS

DECIMALS

ANGLES

SCALE:

REFERENCE DRAWINGS	DWG. NO.

SCHEMATIC DIAGRAM
24 HOUR NEUTRON FLUX MONITOR AND SURVEY METER

OAK RIDGE NATIONAL LABORATORY
OPERATED BY
CARBIDE AND CARBON CHEMICALS CORP.
FOR THE
ATOMIC ENERGY COMMISSION
OAK RIDGE, TENNESSEE

SUBMITTED	ACCEPTED	APPROVED

B-Q-969