[redacted]

MARTIN MARIETTA ENERGY SYSTEMS LIBRARIES
3 4456 0360782 6

ORNL 743
Chemistry-Separation Processes for Plutonium and Uranium

AEC RESEARCH AND DEVELOPMENT REPORT

LABORATORY RECORDS
1954

[redacted]

APPLICATION OF THE PUREX PROCESS TO ORNL METAL WASTE RECOVERY

DECLASSIFIED
CLASSIFICATION CHANGED TO:
BY AUTHORITY OF: TID-1231
BY: M. Bowman 9/26/60

CENTRAL RESEARCH LIBRARY
DOCUMENT COLLECTION
LIBRARY LOAN COPY
DO NOT TRANSFER TO ANOTHER PERSON
If you wish someone else to see this document, send in name with document and the library will arrange a loan.

OAK RIDGE NATIONAL LABORATORY
OPERATED BY
CARBIDE AND CARBON CHEMICALS DIVISION
UNION CARBIDE AND CARBON CORPORATION
UCC
POST OFFICE BOX P
OAK RIDGE, TENNESSEE

[redacted]

[redacted]

Report Number: ORNL-743

This document consists 8A
o[redacted]
C[redacted]

Contract No. W-7405, eng 26

CHEMICAL TECHNOLOGY DIVISION

LABORATORY SECTION

APPLICATION OF THE PUREX PROCESS TO ORNL METAL WASTE RECOVERY

T. C. Runion and C. V. Ellison

Work by:

Professional	Assistants
C. V. Ellison	J. L. Bamberg
T. C. Runion	V. L. Fowler
	H. F. Soard

DATE ISSUED

AUG 24 1950

OAK RIDGE NATIONAL LABORATORY
Operated by
CARBIDE AND CARBON CHEMICALS DIVISION
Union Carbide and Carbon Corporation
Post Office Box P
Oak Ridge, Tennessee

[redacted]

MARTIN MARIETTA ENERGY SYSTEMS LIBRARIES

3 4456 0360782 6

[redacted]

ORNL 743
Chemistry-Separation Processes
for Plutonium and Uranium

Internal Distribution

1. G. T. Felbeck (C&CCD)
2-3. 706-A Library
4. 706-B Library
5. Biology Library
6. Health Physics Library
7. Metallurgy Library
8-9. Training School Library
10-13. Central Files
14. C. E. Center
15. C. E. Larson
16. W. B. Humes (K-25)
17. W. D. Lavers (Y-12)
18. A. M. Weinberg
19. E. J. Murphy
20. F. C. VondeLage
21. F. L. Steahly
22. J. A. Swartout
23. A. H. Snell
24. A. Hollaender
25. K. Z. Morgan
26. D. W. Cardwell
27. M. T. Kelley
28. J. H. Gillette
29. W. K. Eister
30. F. R. Bruce
31. D. G. Reid
32. F. L. Culler
33. J. O. Davis
34. T. C. Runion
35. C. V. Ellison

External Distribution:

36-41. Argonne National Laboratory
42. Armed Forces Special Weapons Project
43-49. Atomic Energy Commission, Washington
50-53. Brookhaven National Laboratory
54-55. Carbide and Carbon Chemicals Division (K-25 Plant)
56. Chicago Operations Office
57-63. General Electric Company, Richland
64. Hanford Operations Office
65-66. Idaho Operations Office
67. Iowa State College
68. Kellex Corporation
69-72. Knolls Atomic Power Laboratory
73-75. Los Alamos
76-78. Mound Laboratory
79-82. New York Operations Office
83. Patent Branch, Washington
84-98. Technical Information Division, ORE
99-101. University of California Radiation Laboratory

[redacted]

Contents

		Page Number
1.0	Abstract	4
2.0	Introduction	5
3.0	Summary	7
4.0	Optimum Conditions for the TBP Extraction of Plutonium from ORNL Metal Waste	9
4.1	Solvent Concentration	9
4.2	Feed Preparation for Plutonium and Uranium Extraction	10
4.21	Effect of HNO_3 Concentration	10
4.22	Effect of Phosphate and Uranium Concentrations	11
4.23	Adjustment of Uranium Concentration and Organic: Aqueous Flow Ratios	12
4.24	Precautionary Feed Pretreatment Procedures for Complete Plutonium Recovery	13
4.25	Emulsions and Crud Formation	14
4.3	Separation of Uranium and Plutonium	15
5.0	Process Demonstration	16
5.1	Counter-current Batch Runs	17
5.2	One-inch Laboratory Column Runs	17
5.21	Extraction and Scrubbing	18
5.22	Partitioning Column	18

Contents (continued) Page Number

6.0 Conclusions and Future Program 20

7.0 Addenda 21

7.1 Uranium and Plutonium Analyses of ORNL Metal Waste 21

7.2 Summary of Proposed Metal Recovery Flowsheets

7.21 ORNL Metal Recovery Flowsheet #1 (TBP Process for Uranium Recovery Only)

7.22 ORNL Metal Recovery Flowsheet #3 (Modified Purex Process for Simultaneous Recovery of Uranium and Plutonium from ORNL Metal Wastes)

8.0 Acknowledgement 22

9.0 Bibliography 23

1.0 Abstract

The progress in the laboratory scale development of a modified Purex Process for the tributyl phosphate extraction of uranium and plutonium from ORNL metal wastes is presented.

[redacted]

2.0 Introduction

Considerable losses of plutonium occurred during the early ORNL pilot plant development of the bismuth phosphate process and this plutonium was stored in the metal waste tank farm along with the uranium. Additional plutonium accumulated from subsequent laboratory and pilot plant process development programs, and from the material used in Ra La and radioisotopes production. A recent survey indicated the total amount stored at the present time to be about one kilogram[1].

The feasibility of a solvent extraction process employing tributyl phosphate (TBP) for the recovery of this plutonium was indicated during the recent development of the TBP Process for uranium from metal waste[2,7,9]. During the laboratory development of this process it was observed that, in the presence of appreciable quantities of uranium, plutonium was extractable in the tetravalent state, the trivalent species being almost completely inextractable. Therefore, in order to obtain adequate separation from uranium (1 part of plutonium in 10^8 parts of uranium) it was necessary to maintain the plutonium in the solvent-insoluble form using ferrous sulfamate as a reducing agent.

Following the development of the TBP process for uranium recovery from metal waste, the Purex Process for uranium and plutonium recovery from plutonium production material was evolved by adjusting the solvent and uranium concentrations to permit the simultaneous extraction of uranium (VI) and plutonium (IV) using only nitric acid as a salting agent[4,8].

Introduction (continued)

The process, presented in this report, for the extraction of uranium and plutonium from metal waste, differs from the Purex Process in at least two respects. The fission activity of the waste solutions has cooled two to six years whereas the Purex feed solutions contain shorter cooled activity. Consequently, the decontamination requirements of plutonium and uranium from fission activity in waste solutions are considerably less difficult than in the case of Purex. On the other hand, waste solutions contain appreciable quantities of sulfates, phosphates, fluorides and other aqueous-soluble complexing agents which inhibit plutonium recovery by solvent extraction, and complete recovery of plutonium from waste solutions is somewhat more difficult. The disadvantage of the plutonium complexing anions in the waste solutions, however, is partly offset by the presence of high concentrations of sodium nitrate which, on a molar basis, is equivalent to nitric acid as a salting agent for the TBP extraction of plutonium.

Upon the adoption of the TBP process for the recovery of uranium stored in metal wastes at Hanford, it was decided that a TBP plant should be built at ORNL both to recover the uranium stored at ORNL and to serve as a pilot plant for the Hanford operation[5]. An economic study by the Design and Laboratory Sections of the Chemical Technology Division at ORNL[1,11,12,13] indicated that the cost of recovering the 150 tons of ORNL uranium may be largely offset by recovering the plutonium contained

Introduction (continued)

in the waste. Consequently, studies were undertaken by the laboratory group to establish the chemical feasibility of recovering the plutonium, as well as the uranium, with a minimum of changes in the equipment and chemical conditions of the TBP process.

3.0 Summary

The chemical feasibility of recovering 99.5% of the plutonium in ORNL metal waste has been demonstrated in counter current batch equipment and on a three-column laboratory scale using a modified Purex[4,8] process. The principle process features are summarized as follows:

(1) Plutonium (IV) and uranium (VI) are extracted simultaneously in the first packed column from a 4.5 molar nitric acid solution of metal waste using 15% tributyl phosphate, in a hydrocarbon diluent as solvent. Uranium losses are less than 0.1% and plutonium losses are 0.1 to 0.5% in this step. The beta activity extracted with the uranium amounts to less than 70 disintegrations per minute per milligram of uranium, or about 10% of the activity of natural uranium.

(2) Upon leaving the scrub section at the top of the first column, the organic stream is counter-currently contacted in a second column with 2.0M nitric acid containing one gram per liter of ammonium fluosilicate. The plutonium is complexed into the aqueous phase, and the organic uranium bearing stream is passed to a third column where the uranium is stripped using demineralized water.

Summary (continued)

(3) The plutonium product from batch counter-current runs contains less than one milligram of uranium and less than 10^6 total beta disintegrations per milligram of plutonium. The overall plutonium loss is 0.5 to 1.5%.

(4) The uranium product contains less than one α count per milligram of uranium ($<10^{-8}$ parts of plutonium) and less than 50 beta disintegrations per milligram ($<8\%$ of the beta activity of natural uranium). The overall uranium loss is 0.1%.

(5) The uranium product solution is concentrated by evaporation to 2.0 M uranyl nitrate. This solution contains about 0.5 gram of phosphate ion per liter.

(6) Preliminary laboratory studies have shown that the volume of the ammonium fluosilicate-nitric acid solution containing the plutonium may be reduced 300 fold by evaporation without difficulty. This procedure yields a product solution containing about one-half gram of plutonium and about one-half gram of uranium per liter. For final purification the plutonium may be shipped to Hanford Works and processed in the second bismuth-phosphate precipitation cycle or, alternately, be subjected to a laboratory clean-up cycle at ORNL.

The recovery of plutonium from the metal waste, does not materially change the cost of operating procedure as initially envisioned for the TBP Process[2,7] for uranium recovery alone. The cost of inserting the required extra column represents an increase of less than one percent in

Summary (continued)

the total cost of uranium recovery[11,12,13]. The value of the recovered plutonium (about 1 Kg.)[1,10] largely offsets the cost of the metal recovery project.

4.0 Optimum Conditions for the TBP Extraction of Plutonium

The mechanism for uranium extraction by tributyl-phosphate has been reasonably well established[2,7,9]. Similarly, the effect of process variables on plutonium extraction have been reported[4,8] and will only be discussed to the extent necessary to explain the choice of the operating conditions outlined in the plutonium-uranium recovery flowsheet.

4.1 Solvent Concentration

The bulk of the uranium in ORNL wastes is in the form of an alkaline precipitate. Direct dissolution of this precipitate in HNO_3 is capable of yielding feed solutions as much as one molar in uranium. Therefore, in order to obtain maximum uranium recovery per unit volume of solvent, the TBP concentration in the solvent mixture should be maintained as high as is compatible with good mechanical operability, and ease of stripping. The optimum point has been established at about 15% TBP by volume since experiments have demonstrated that extraction of waste solutions with solvent concentrations greater than 15% result in the formation of emulsions. In addition, the back extraction of uranium becomes more difficult unless volume ratios of water to organic greater than one are used. To date, "Varsol" and "Gulf BT" have been used as

Solvent Concentration (continued)

the hydrocarbon diluents although other solvents are feasible for this purpose, notably Deobase, from Shell Petroleum Corporation, and Amsco from the American Mineral Spirits Company.

At the present time, studies are under way in conjunction with the Purex Program[4] to establish a flowsheet utilizing a solvent concentration of 30%. This permits a decrease in the volume of TBP per unit of uranium transfer, but a different method of stripping may be anticipated. However, unless the waste feeds are highly clarified and special precautions are taken in dissolving, such solvent concentrations will not be feasible in this process.

4.2 Feed Preparation

The metal wastes at ORNL are stored as hydroxide and phosphate precipitates in concrete and gunnite tanks. For uranium and plutonium recovery the settled solids will be dissolved in excess acid, filtered and passed to the TBP extraction column, and the supernatant liquid will be decanted to the plant evaporator. For the recovery of hexavalent uranium and tetravalent plutonium, no other feed preparation step is necessary.

4.21 Effect of HNO_3 Concentration of the Feed

The rather high dependence of plutonium extraction on

Effect of HNO_3 Concentration of the Feed (continued)

aqueous nitrate concentration has been reported for the Purex Process and the data apply equally well to the extraction of plutonium from waste solutions. However, even higher acidities are required in the latter case because of the presence of one-tenth molar quantities of phosphates and sulfates which form strong, aqueous soluble complexes with plutonium. In a series of batch extractions using 15% TBP and Pu(IV) tracer, in the presence of 0.15M $PO_4^{\equiv}$, distribution coefficients (organic/aqueous) varied from 0.35 in 2.0M HNO_3 to an apparent maximum of 1.5 in 5.0 M HNO_3 (see Table 1 and Figure 1). An acid concentration of 4.5 M was chosen as the optimum since an average ORNL waste solution feed containing 100 g/l of uranium is about 1 to 2 M in Na NO_3 and the components of this heavily salted feed might "freeze out" at higher acid concentrations.

4.22 Phosphate and Uranium Concentrations

The presence of both phosphate and uranium ions depresses the extraction of plutonium by TBP*. The phosphates inhibit plutonium extraction by forming a tightly bound aqueous-soluble complex (see Table 2) whereas, the presence of uranium decreases plutonium extraction by a

* Sulfates also cause a similar decrease in plutonium extraction, but batch experiments have indicated that plutonium complexing by sulfates, on an equivalent mole basis, is lower by a factor of 3 to 4. Fluorides are strong plutonium complexing agents, but are present only in trace amounts. Consequently, the phosphate concentration is by far the limiting consideration.

Phosphate and Uranium Concentrations (continued)

mass effect in competing for the TBP molecules. To illustrate these effects a family of curves has been prepared showing the variation of plutonium extraction with different uranium and phosphate concentrations in 4.5 M HNO_3. The effect of $NaNO_3$ in increasing the distribution coefficients for plutonium is also indicated.

Using the distribution coefficients taken from these curves and the necessary flow ratio to give an extraction factor equal to, or greater than, one, the basis for a satisfactory extraction section operating line is provided (see Figure 2). These extraction section data have been substantiated by a series of batch counter-current runs in which synthetic feeds were used containing Pu IV tracer and known quantities of phosphates, nitric acid, and uranium (see Table 4). Using a two to one organic to aqueous flow ratio, the results indicated that the optimum uranium concentration in the extraction section, in the presence of 0.15 M $PO_4^{\equiv}$, 4.5M HNO_3, and 2.0M $NaNO_3$, was about 70 g/l. Before dilution with the half-volume of scrub stream, this would represent a feed uranium concentration of about 100 g/l.

4.23 Adjustment of Uranium Concentration and Organic to Aqueous Flow Ratios

With a feed solution containing about 100 g/l of uranium and 0.15M in phosphate ion, flow ratios of at least 6:2:1 (solvent:feed: scrub) were found necessary. This flow ratio is based on the results of

Adjustment of Uranium Concentration and Organic to Aqueous Flow Ratios (continued)

a large number of counter-current runs on both synthetic and actual waste feed solutions. The data show that quantitative plutonium recovery from 0.15M phosphate solutions cannot be obtained if the degree of solvent uranium saturation is much greater than 60%. This degree of solvent saturation is much less than is operable in the Purex Process and is determined by the effect of phosphates and sulfates in decreasing plutonium distribution ratios in addition to the competition of uranium for the solvent.

4.24 Precautionary Feed Pretreatment Procedures

All data now available indicate that most of the plutonium in the waste is in the tetravalent state. However, because of the lack of homogeneity of the waste and the impossibility of sampling the waste tanks in a truly representative manner, procedures must be available to convert the other species of plutonium to plutonium IV if they are encountered. The conversion of Pu(IV) polymer to the monomeric state and the oxidation and reduction of Pu III and VI only involve application of the established chemistry of the element (see Table 3) and have been demonstrated in laboratory experiments.

By far the simplest solution to the problem of feed preparation for both uranium and plutonium recovery would be to homogenize the contents of an entire waste tank by prolonged agitation or sparging. Following

Precautionary Feed Pretreatment Procedures (continued)

this operation, careful ionic analysis could establish a routine feed preparation procedure that would be valid for as long as a year's plant operation.

4.25 Crud Formation and Emulsion Difficulties

Varying degrees of emulsion formation have been encountered in counter current batch runs depending somewhat on the procedure by which the sludge dissolution and filtration steps were carried out.

For example, emulsion difficulties (phase disengaging times of about 5 minutes) were observed when sludge was dissolved in four to five molar excess nitric acid, filtered, and then used as the extraction feed in counter-current batch runs. On the other hand, little or no such difficulty was experienced if the sludge were dissolved to two to three molar excess nitric acid and filtered prior to adjustment to the final feed acidity of four to five molar.

In general, the emulsions were observed in the lower stages of the extraction section at those points where the HNO_3 concentration was depleted by contact with the TBP. Samples of the more stable emulsions were collected, filtered and analyzed spectrographically. A predominance of silica was indicated in each case. Since silicic acid has an equilibrium solubility depending on the acid concentration, it is assumed that the

Crud Formation and Emulsion Difficulties (continued)

silica precipitates when the acid is depleted below the solubility threshold and thus acts as a stabilizing agent for the formation of emulsions.

Based on the above considerations it is recommended that the acidity during dissolution of the sludge be maintained below three molar until the solution has been clarified. In any case, the filtered crud should be examined for adsorbed plutonium before discarding. This procedure should be carried out as a precautionary measure even though no indication has been obtained to date that losses in this step will be significant.

4.3 Separation of Uranium and Plutonium

The separation of uranium and plutonium in the partitioning column is accomplished in the Purex Process using 0.05 molar ferrous ammonium sulfates in 1.5 M HNO_3[1]. In this medium, plutonium is reduced to the solvent insoluble trivalent state. The primary disadvantages of ferrous sulfamate are (1) its instability in high concentrations of nitric acid, (2) a somewhat tedious preparation procedure and (3) the inability to concentrate a 0.05 M solution by more than a factor of fifty.

Studies carried out at the Hanford laboratories on the use of ammonium fluosilicate for separation of plutonium from uranium in the TBP Process have been very promising[5]. Depending upon the nitric acid and fluosilicate concentrations, the distribution coefficients of uranium and plutonium could be made to differ by factors of from twenty to several hundred. Application of the data of the Hanford workers was made to plutonium separation

Separation of Uranium and Plutonium (continued)

in the partitioning column without further investigation. The results showed that adequate separation was obtained in five stages of counter-current batch runs, using one gram per liter of ammonium fluosilicate in two molar nitric acid.

Only brief investigations have been made on the evaporation of plutonium-fluosilicate solutions. Mechanically, the operation is quite simple, and for one gram per liter solutions in two molar nitric acid, volume reduction factors of greater than 300 were shown. However, plutonium volatilization and entrainment should be investigated before this procedure is finally adopted.

5.0 Process Demonstration

Initially, the primary objective of this study was to demonstrate plutonium recovery through the extraction column only, since the remainder of the process does not differ materially from Purex and would draw heavily on those studies. However, a sufficient number of counter-current batch runs was made on actual waste solutions to demonstrate the proposed process, and the mechanical operability was shown in one inch diameter packed columns.

5.1 Counter-current Batch Extraction Runs Through Extraction and Scrubbing

In six counter-current batch extracion runs using acidified ORNL waste solutions as a feed, plutonium recovery was 98.5-99.8% through seven extractions and four scrub stages. The beta activity associated with the uranium and plutonium stream varied from 1 - 10% of that of natural uranium (1 - 10 c/m/mg U), as the flow ratio (org./aq.) was varied from 2:1 to 4.5:1 (see Table 5).

5.2 One Inch Laboratory Column Runs

The mechanical operability of the process was demonstrated throughout in a 40 hour run using one inch diameter laboratory columns. For comparison, a counter-current batch run was carried out simultaneously using aliquots of the column feed streams and similar volume flow ratios.

The extraction column consisted of 14 feet of extraction section and two feet of scrub section packed with 1/4" x 1/4" Raschig rings. The second column consisted of 13 feet of partitioning section and two feet of organic scrub section to remove the refluxed uranium. The length of the uranium strip column was 10 feet. The waste metal feed was 4.55M in HNO_3 and contained 93.6 g/l of uranium. The solvent mixture was 15% TBP - 85% Gulf BT. This mixture was prewashed with two 1/4 volumes of 1.0 M NaOH followed by two 1/4 volume water washes.

5.21 Extraction and Scrubbing

Using an organic to aqueous feed flow ratio of 5:2, the extraction losses were 0.36% for plutonium and 0.2% for uranium for 14 feet of extraction. In the batch counter-current run utilizing the same feeds and flow ratios the losses were 0.44% for plutonium and 0.18% for uranium using seven extraction stages. The beta activity was reduced from about 15,000 c/m/mg U to 10 c/m/mg U over the first column. To hold the amount of plutonium and uranium reflux to a minimum, 6 M HNO_3 was used in the scrub section. No data were obtained on the decontamination over this section but other counter-current results indicated it to be the order of ten. For plant design an extraction section of eight stages (about 25 feet) and a scrub section of four stages (about 10 feet) will be anticipated.

5.22 Partitioning Column

In the second column, plutonium was separated from uranium using one gram/liter of the Pu complexing agent, ammonium fluosilicate, in 2 M HNO_3. The flow rate of the aqueous stream was about 1/5 that of the total organic flow entering the column (i. e. 1.35 vols.). In the 13 feet of partitioning section, the total plutonium activity associated with the uranium was reduced from 6.4×10^3 c/m/mg of U to 12.5 c/m/mg of U. Using aliquots of the same feed the plutonium activity was reduced to <1 c/m/mg U in four stages of a counter-current batch extraction run. Since the

Partitioning Column (continued)

plutonium distribution coefficient (organic/aqueous) in the last partitioning stage was less than 0.07, it is felt that 20 feet of partitioning section will be sufficient to obtain the necessary plutonium-uranium separation (i.e. less than one part of plutonium in 10^8 parts of uranium).

The bottom of the partitioning column consisted of two feet of an organic scrub section for removing uranium from the plutonium product stream. The flow rate of the scrub stream (fresh 15% TBP) was approximately equal to the total aqueous flow (i.e. 1.25 vols.). After this scrubbing, the uranium concentration in the plutonium product stream was about 1.4 grams uranium/mg. of plutonium. In the corresponding batch counter-current section, the uranium concentration in the plutonium product after two stages was about 69 mg U/mg Pu. In other batch counter-current runs, this was reduced to approximately 1 mg U/mg Pu after 4 scrub stages. Present indications are that at least 10 feet of organic scrub section will be necessary to separate plutonium from uranium adequately (i.e. 1 mg U/mg Pu).

The beta activity carried from the extraction column was small (i.e. less than 10 c/m/mg U) and could not be followed accurately. In the partitioning column, this activity divided fairly evenly between the plutonium and uranium streams. On this basis, the plutonium product would contain about 7×10^5 βc/m/mg Pu (at 10% geometry). The counter-current data indicate that this figure should be smaller by a factor of about five.

6.0 Conclusions and Future Program

The mechanical and chemical feasibility of plutonium recovery from ORNL waste is assured, although additional operating and design data, particularly on the partitioning column, must be accumulated.

The primary disadvantages of the procedure for both Pu and U recovery over the TBP Process as outlined in ORNL-260 for uranium recovery alone are:

(1) The organic feed to flow ratio is materially increased (from 6 volumes to 7.5).

(2) The phosphate concentration of the feed must be restricted to a maximum of about 0.15M. In some cases this may require dilution of the feed and, hence, lower uranium throughput.

(3) Nitric acid consumption is about doubled, although this, of course, may be largely recovered.

The future program will be largely devoted to laboratory column studies on HETS determination, flooding rates and process testing. However, in large measure, many of the engineering features will be developed during the Pilot Plant demonstration of Purex.

7.0 Addenda

7.1 Uranium and Plutonium Analyses of ORNL Metal Waste

The amount of uranium stored in ORNL metal wastes has been recorded fairly accurately in Source and Fissionable records and is about 146,000 kgs (2/28/50)[1]. However, the quantity of plutonium stored was more uncertain and was variously estimated at 0.5 to 3.0 kilograms. To establish the economic feasibility of recoverying this plutonium by a modified Purex Process, it was necessary to determine the total quantity of plutonium in the wastes rather carefully. Previous uranium analyses were also rechecked (see Table 7). Since the ionic content of other constituents would be of considerable interest in the metal recovery program, these data were also obtained and are reported in Table 8.

The results indicate a total of approximately 139,000 kgs of uranium which agrees within 5% of the quantity as reported in Source and Fissionable records. The authors believe this to be a reliable indication that representative samples were obtained.

The analyses indicate that about 969 grams of plutonium is contained in the precipitated sludge and about 23.5 grams in the supernatant of waste tanks #3 through 10. The 706-A chemical waste tank was not sampled, but records indicate it should contain an additional 9 grams of plutonium and about 1890 kilograms of uranium.

The total cost of uranium recovery by the TBP Process has been

Uranium and Plutonium Analyses of ORNL Metal Waste (continued)

presented by E. C. Stewart[2,3,4] as approximately $3.04 per pound. The cost of recovering plutonium simultaneously would not increase this cost by as much as 1%. On the other hand, the value of the recovered plutonium, using the most conservative figures, would pay for 50 to 75% of the cost of recovering the uranium and plutonium from the metal waste tanks. On this basis, it is clear that plutonium recovery from ORNL waste metal is economically attractive.

8.0 Acknowledgement

The authors acknowledge their appreciation to Paul F. Thomson, L. T. Corbin and assistants of the Chemistry Division for the analyses performed in conjunction with the ORNL Metal Recovery Project.

T. C. Runion

T. C. Runion

C. V. Ellison

C. V. Ellison

9.0 Bibliography

1. Ellison, C. V., T. C. Runion, Uranium and Plutonium Analyses of ORNL Metal Waste - Feasibility of Plutonium Recovery in the TBP Process, ORNL C. F. Memo #50-4-135.

2. Ellison, C. V., D. E. Ferguson, T. C. Runion, Solvent Extraction of Uranium from ORNL Metal Waste, ORNL-258.

3. Ferguson, D. E., TBP Uranium Recovery Process for ORNL Metal Waste, ORNL C. F. Memo #49-11-304.

4. Lanham, W. B., A. T. Gresky, Purex Process Laboratory Process, ORNL-717.

5. Moore, Robert L., The Use of Fluosilicate to Improve Plutonium Decontamination in the TBP Metal Recovery Process, HW-15231.

6. Richards, R. B., ORNL Program for TBP Metal Waste Recovery Development, HW-15939.

7. Runion, T. C., D. E. Ferguson, Tributyl Phosphate Solvent Extraction of Uranium from Metal Waste - Laboratory Investigation, ORNL-260.

8. Runion, T. C., W. B. Lanham, Purex Process for Plutonium and Uranium Recovery, ORNL-479.

9. Runion, T. C., C. V. Ellison, TBP Process for Uranium Recovery from Metal Waste - Laboratory Summary, ORNL-557.

10. Stringfield, H. F., Source and Accountability Section, ORNL, Personal Communications.

11. Stewart, E., Cost Survey for Proposed TBP Metal Recovery Plant - ORNL C. F. Memo #50-1-41.

12. Stewart, E., Supplement of Cost Survey for Proposed TBP Process, Letter from E. Stewart to F. L. Steahly, January 30, 1950.

13. Stewart, E., Revision in Cost Survey for Proposed TBP Process, ORNL C. F. Memo #50-3-142.

Table 1

Effect of HNO_3 on Pu(IV) Extraction with TBP in the Presence of 0.15 M Phosphate

(Batch Extraction Data)

Aq. Phase: Varying HNO_3 conc.; 0.15 M $PO_4^{\equiv}$; Pu(IV) tracer

Org. Phase: One double-volume pass, 15% TBP - 85% Gulf BT.

HNO_3 Conc. (M/L)	Pu(IV) Distribution Coefficient(Org./Aq)	HNO_3 Distribution Coefficient(Org/Aq)
2.0	0.35	0.10
2.5	0.46	0.11
3.0	0.61	0.11
3.5	0.70	0.11
4.0	1.1	0.11
4.5	1.4	0.10
5.0	1.4	0.10

[redacted]

Table 2

Effect of Uranium and Phosphate Concentrations on Uranium and Plutonium (IV) Extraction with TBP

(Batch Extraction Data)

Aqueous phase: Varying phosphate and uranium concentration, 4.5 M HNO_3, Pu(IV) tracer

Organic phase: 2 volumes 15% TBP - 85% Gulf BT (by volume)

$PO_4^{\equiv}$ Conc.	Uranium Distribution Coefficient (Org/aq) at Varying* U Concentrations			Plutonium Distribution Coefficient at Varying* U Concentrations			
(M)	30 g/l	65 g/l	85 g/l	No U	30 g/l	65 g/l	85 g/l
0.0	15.0	6.8 7.2	4.8	4.9	2.7	1.7	1.2
0.05	11.0	6.3 5.4	3.1	3.4	1.6	0.93	0.44
0.10	8.3	4.7 4.5	3.3	2.0	0.93	0.49	0.26
0.15	7.1	4.0 3.7	2.7	1.4	0.62	0.29	0.19
0.20	5.3	3.5 3.1	2.3	0.90	0.40	0.17	0.11
0.25	4.8	1.7 2.7	2.2	0.50	0.29	0.12	0.08

* The presence of 1.0 to 2.0 M Na NO_3 in the metal waste feed appreciably increases these values.

[redacted]

Table 3

Feed Preparation Procedures for Converting Mixed Species of Plutonium to the Monomeric Tetravalent State

Form in which Pu may be encountered	Treatment necessary to convert to Pu^{IV}
Pu^{IV} polymer, Pu adsorbed on solids, and Pu^{III}	Heat 3 to 4 hours in 4.5-5 M HNO_3 at 60°C
Pu^{VI}	Add 0.01 M ferrous sulfamate to convert to Pu^{III}. After 15 minutes, destroy excess ferrous sulfamate and oxidize to Pu^{IV} using 0.01 M $NaNO_2$ and heat to 60°C for 1 hour.

Table 4

Plutonium and Uranium Extraction from Synthetic ORNL Waste

Counter current batch runs - 7 extraction stages only
2:1 flowratio (org:aq.)

Aqueous feeds: 2.0M $NaNO_3$, Pu IV tracer
Organic Solvent: 15% TBP - 85% Gulf BT

Feed Concentration in Extraction			Distribution Coefficient at feed plate (Org./Aq.)		Losses (%)		Recovery (%)***	Uranium Saturation at Feed Plate (%)
U (g/l)	HNO_3 (M)	$PO_4^{\equiv}$ (M)	U	Pu	U	Pu	Pu	
120	3.5	0.05	0.56	0.18	0.04	6.1	65.0	~100.0
110	4.6	0.28	0.85	0.09	0.01	80.0	21.0	91.0
100	3.5	0.00	1.78	0.55	0.04	2.4	82.8	96.5
100	3.5	0.01	1.41	0.65	0.03	1.90	~98	89.9
100	3.5	0.05	2.50	0.57	0.03	1.89	92.8	86.6
100	3.5	0.10	1.77	0.46	0.01	2.72	77.3	82.7
100	4.9	0.15	1.07	0.14	0.03	1.30	71.5	80.1
100	2.5	0.05	1.09	0.16	0.01	2.4	59.1	74.0
100	4.5	0.05	2.26	0.71	0.01	1.12	97.6	84.3
100	5.5	0.05	0.85	0.72	0.01	.82	94.0	82.7
*100	4.9	0.28	0.82	0.04	0.01	36.	17.	82.
85	4.7	0.15	2.43	0.40	0.01	1.56	94.7	68.9
80	3.5	0.05	6.14	1.23	0.01	2.8	90.5	67.8
**67	4.6	0.12	3.07	0.60	0.32	0.66	91.1	71.6
60	3.5	0.05	10.5	1.57	0.01	1.69	89.1	49.8

* Feed heated at 70° for 5 hours

** 0.12M in $SO_4^{\equiv}$ - 4 scrub stages in addition to extraction stages.

*** Low material balances are always observed with a low Pu distribution coefficient at the feed plate, even for very long run times. This is because much higher distribution coefficients occur in the lower column stages and plutonium continues to build up in the column without large losses becoming apparent.

[redacted]

Table 5

Plutonium and Uranium Extraction from ORNL Waste

Counter-current batch equipment (3 minute equilibrations)
7 extraction stages
4 scrub stages (5M HNO_3)
Solvent: 15% TBP - 85% (vol.) Gulf BT

Feed Analyses						Feed Plate Conditions			Flow rates org:feed: scrub	Losses(%)		βc/m/mgU in 1AP
U (g/l)	H +	Pu c/m/ml	$PO_4^{\equiv}$ (M)	$SO_4^{\equiv}$ (M)	Total NO_3^-(M)	Distribution Coefficient (org./aq.) U	Distribution Coefficient (org./aq.) Pu	Solvent U Saturation%		U	Pu	
118	4.65	5.2×10^4	0.07	0.08	6.5	0.7	0.13	92	4:2:1	0.01	22.9	0.4
117	4.55	6.8×10^4				5.8	0.57	44	9:2:1	0.14	0.24	5.7
114	4.65	5.1×10^4	0.14	0.08	6.4	3.9	0.45	71	6:2:1	0.22	0.84	2.9
112	4.50	6.6×10^4	0.14	0.10	6.6	2.8	0.46	41	7.5:2:1	0.05	0.65	7.4
104	4.60	6.6×10^4				0.7	0.22	86	4:2:1	1.0	18.9	13.0
93	4.55	5.4×10^4				2.8	0.41	62	5:2:1	0.05	0.19	10.0
92	4.65	5.5×10^4	0.08	0.08	6.2	2.1	0.34	82	4:2:1	0.11	1.31	2.1
89	4.30	5.6×10^4	0.15	0.10		5.9	0.49	44	6:2:1	0.05	1.46	4.1
86	4.90	5.0×10^4				1.6	0.22	79	4:2:1	0.12	0.58	3.7
86	4.60	3.9×10^4	0.17	0.10	6.2	1.8	0.28	76	4:2:1	0.16	2.4	9.2
81	4.60	5.0×10^4				7.1	0.93	36	7.5:2:1	0.09	0.19	11.0
59	4.60	3.7×10^4	0.06	0.05	5.7	4.5	0.88	50	4:2:1	0.52	0.37	7.6

Table 6

ORNL Waste Metal Recovery Testing in Laboratory Columns and Counter-current Batch Equipment

Flowrates:

		Equipment	Number of Batch Stages	Column Lengths (ft.)
2	AF = Feed*, 4.55M HNO_3, 94 g/l U, 0.15M $PO_4^{\equiv}$, 0.08M $SO_4^{\equiv}$			
1	AS = 6.0 N HNO_3	Ext.	- 7	14
5	AX = 15% TBP - 85% Gulf BT	Scrub	- 4	2
1.25	BS = 15% TBP - 85% Gulf BT	Partitioning	- 4	13
1.35	BX = 2.0 N HNO_3, 1 g/l$(NH_4)_2SiF_6$	Strip	- 4	10

	Pu Loss (%)		U Loss (%)		βc/m/mgU			α c/m/mg U		
	1A	1B	1A	1B	1AP	1BU	1CU	1AP	1BU	1CU
Column Run	0.36	1.9	0.21	0.87	10	11	6	588	12.5	4
Counter current batch run using column feed conditions	0.44	0.19	0.18	0.05	<5	<5	<5	526	<1	<1

* Feed Preparation: W-10 Sludge dissolved with 70% HNO_3 to 3.0M excess and filtered. Made 0.01M in $Fe(NH_2SO_3)_2$ and digested for 30 minutes. Made 4.6 $NHNO_3$ and digested for 7 hrs. at 70°C. Made 0.01M $NaNO_2$.

[redacted]

Table 7

Analyses of Uranium and Plutonium in ORNL Metal Waste Tanks*

Tank No.	Vol. Stored (Kl)		U-Analysis (mg/ml)		Tot. U-Stored (Kgs.)		Pu-Analysis c/m/l		Tot. Pu Stored (Gms)	
	Spn't (Kl)	Sludge (Kl)	Spn't	Sludge	Spn't	Sludge	Spn't	Sludge	Spn't	Sludge
3	135.23	5.39	0.035	207.2	4.73	1158.07	4.4×10^4	8×10^8	0.08	62.2
4	53.70	48.11	0.285	112.0	15.31	5195.99	2.1×10^6	2.5×10^7	1.59	17.4
5	222.26	158.76	0.335	14.3	74.46	2270.26	2.1×10^4	4.3×10^7	0.07	96.4
6	335.66	99.79	0.251	132.	84.25	13172.54	2.3×10^5	1.8×10^7	1.07	24.5
7	331.13	104.33	0.082	324.8	27.15	33885.73	6.0×10^4	9.4×10^6	0.28	13.7
8**	439.99	Neg.	0.130	-	57.20	-	5×10^4	-	0.43	
9	415.04	56.7	5.00	74.4	2075.22	4218.48	3.4×10^6	3×10^8	19.8	237.
10	417.31	204.12	0.065	375.5	271.22	76545.06	5×10^4	1.75×10^8	0.23	498.8
Total	2350.32	677.20			2559.5	136446***			23.5	950.0

*** 706-A Chemical Waste Tank was not sampled. Source and Fissionable records indicate that an additional 1891 kgs of uranium is stored here, plus about 9 grams of plutonium.

** No appreciable quantity of sludge was present in Tank #8. The supernatant was sampled both at the surface and at the bottom and the analyses given represent an average of these two figures.

* Tanks were sampled on 3/4/50.

[redacted]

Table 8

Anionic Analyses of the ORNL Metal Wastes Tanks***

Sludge								
	Ionic Content (mg/ml)				Ionic Content (mg/mg U)			
Tank No.	CO_3	NO_3	SO_4	PO_4	CO_3	NO_3	SO_4	PO_4
3	76.14	482.3	None detected	35.20	0.23	1.50	None detected	0.11
4	8.20	118.0	"	107.00	0.07	1.60	"	0.96
5	12.00	1162.0	"	73.00	0.92	87.37	"	5.49
6	70.56	83.5	"	35.72	0.54	0.64	"	0.28
7	79.64	108.3	"	36.11	0.27	0.35	"	0.12
*8-A	4.50	10.4	0.70	0.70	150.00	364.60	23.30	23.30
**8-B	3.70	58.3	33.70	10.80	52.86	832.90	481.40	154.30
9	20.	63.0	72.00	30.00	0.26	0.80	0.70	0.38
10	2.3	357.5	32.74	41.26	0.21	9.45	0.09	0.11

* from surface of solution in tank

** from bottom of solution in tank

*** tanks were sampled 3/4/50

[redacted]

Table 8 (continued)

Anionic Analyses of the ORNL Metal Wastes Tanks

Tank No.	Supernatant							
	Ionic Content (mg/ml)				Ionic Content (mg/mg U)			
	CO_3	NO_3	SO_4	PO_4	CO_3	NO_3	SO_4	PO_4
3	79.40	21.20	None detected	0.12	992.50	265.00	None detected	1.50
4	11.80	11.20	"	0.18	90.80	86.16	"	1.38
5	15.80	32.00	2.80	1.60	316.00	640.00	56.00	32.00
6	18.00	201.00	37.80	9.80	128.57	1435.71	270.00	70.00
7	16.40	46.60	9.00	3.20	234.29	665.71	128.57	45.71
*8-A	13.40	205.40	None detected	0.80	268.00	4108.00	None found	1.60
**8-B	12.80	175.60	32.00	14.40	116.37	1596.36	290.91	130.91
9	35.20	Crystals	4.80	1.60	26.07	Crystals	3.56	1.18
10	12.60	49.20	7.40	3.40	252.00	985.00	148.00	68.00

* from surface of solution in tank

** from bottom of solution in tank

*** tanks were sampled 3/4/50

[redacted]

FIGURE I

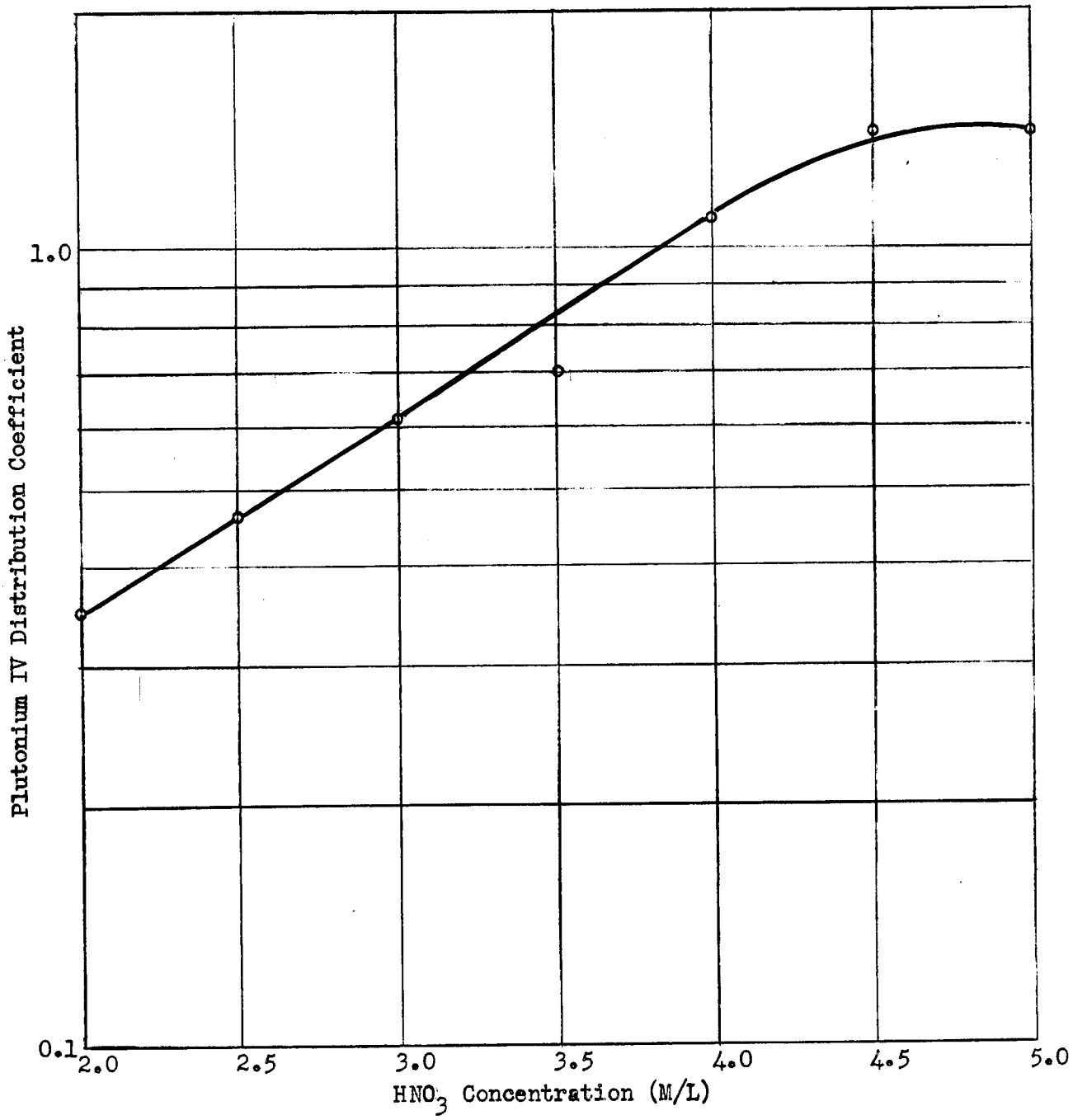

EFFECT OF HNO_3 ON PLUTONIUM IV EXTRACTION WITH 15% TBP

Aqueous Phase: 0.15M $PO_4^{\equiv}$, Pu IV tracer, varying HNO_3 concentration

Organic Phase: One double volume pass with 15% TBP 85% Gulf BT

[redacted]

Drawing No. 9338
ORNL-743

FIGURE 2

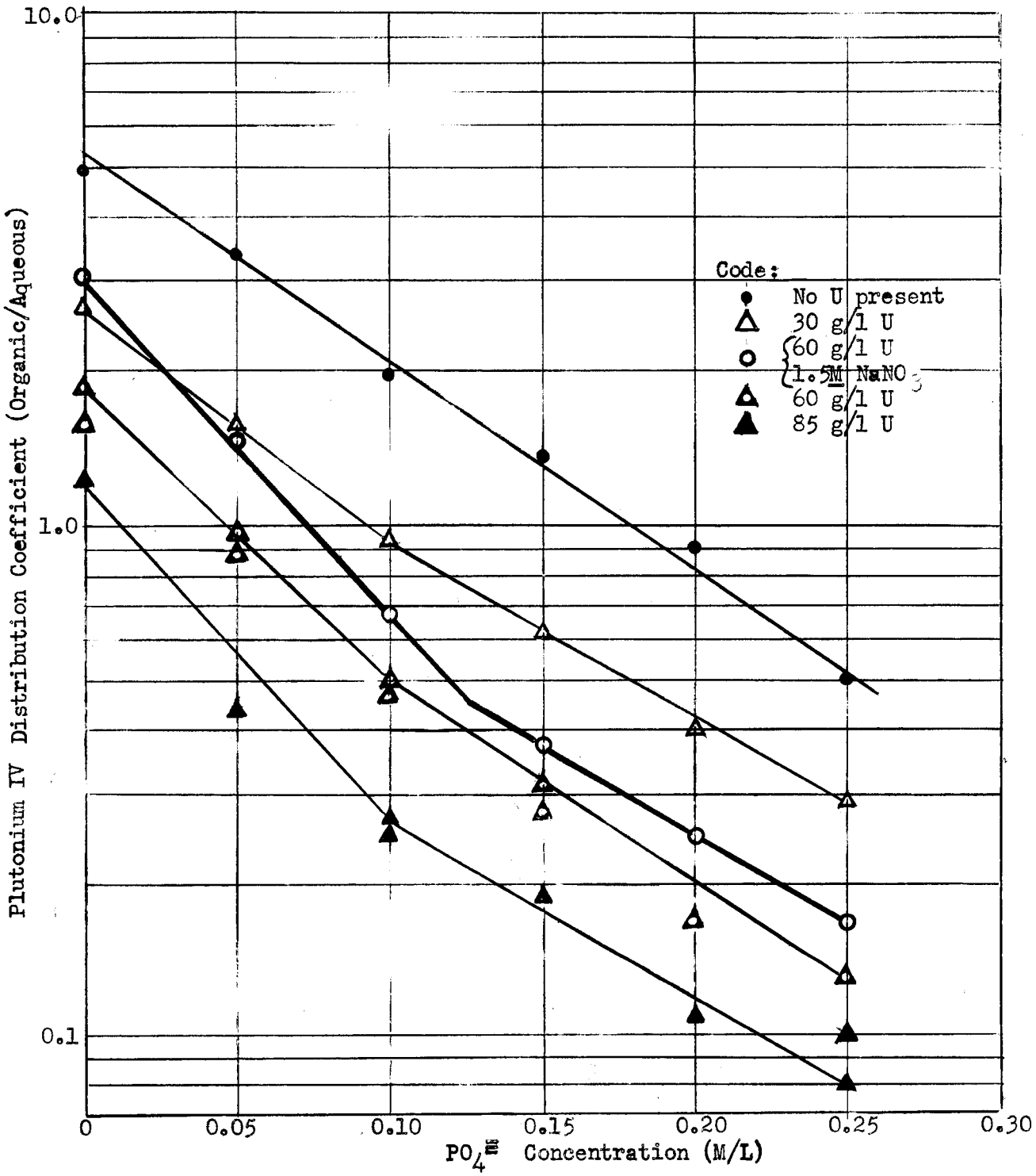

EFFECT OF URANIUM AND PHOSPHATE

CONCENTRATIONS ON PLUTONIUM IV

Aqueous Phase: 4.5M HNO_3, Pu IV tracer varying phosphate and uranium concentrations

Organic Phase: One double volume pass 15% TBP 85% Gulf BT

[redacted]

[redacted]

FIGURE 3

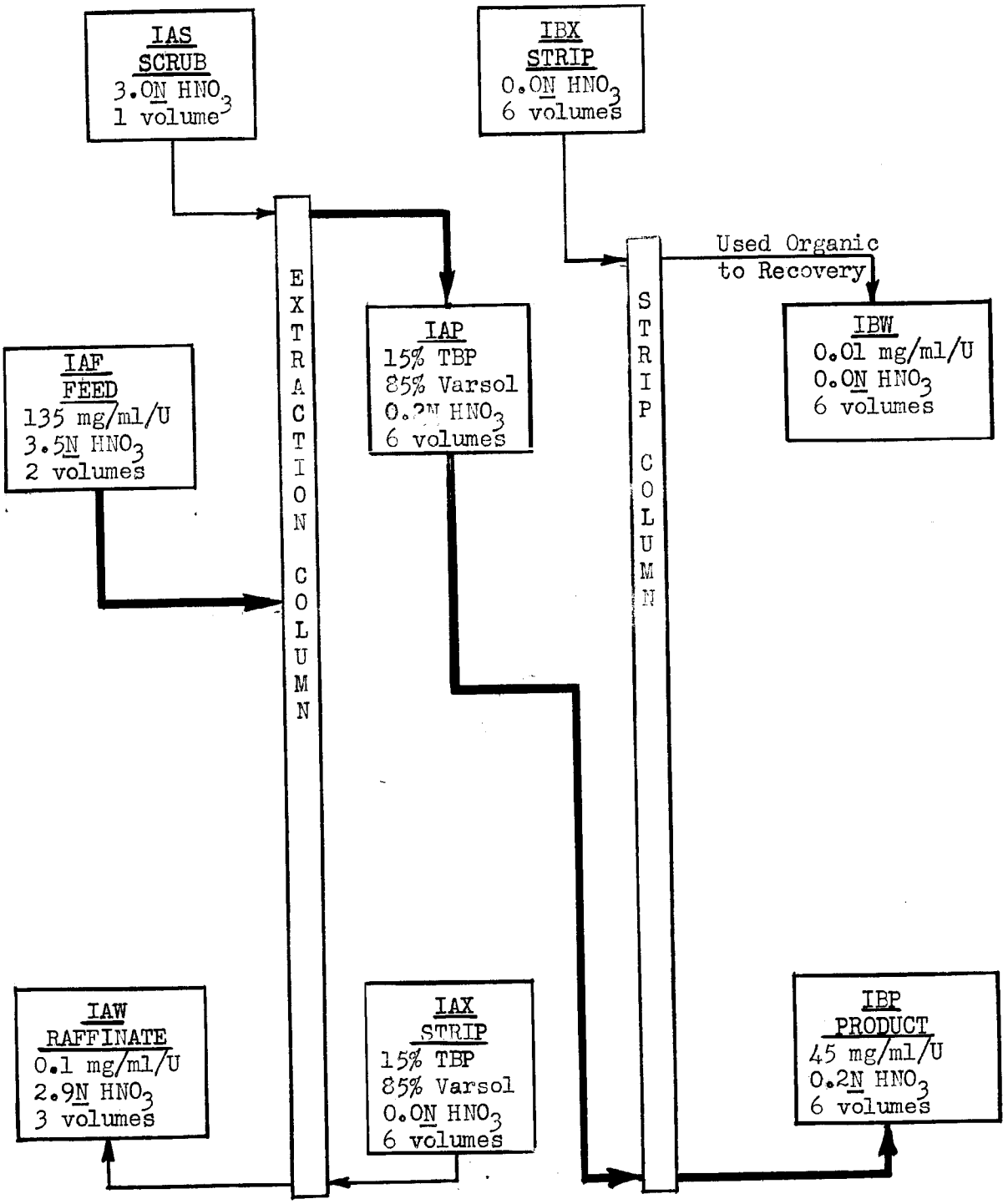

LOSSES	
Extraction	0.1
Strip	neg.
Overall	0.1

DECONTAMINATION	
Extraction	3×10^3
Strip	———
Scrub	5×10^0
Overall	1.5×10^4

ORNL METAL RECOVERY FLOWSHEET #1

TBP PROCESS FOR URANIUM RECOVERY FROM METAL WASTE

[redacted]

ORNL-743
Drawing No. 9340

FIGURE 4

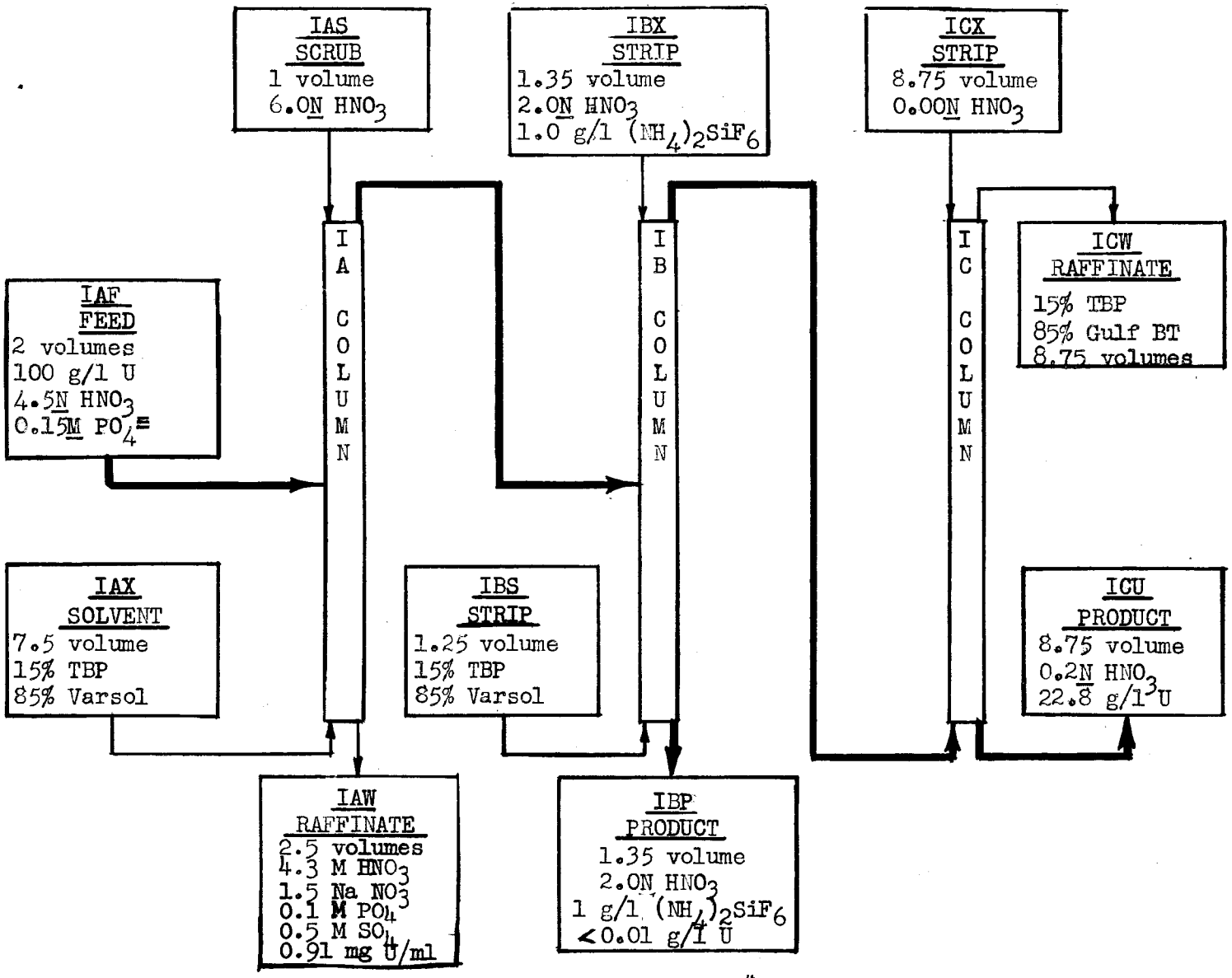

ORNL METAL SCHEMATIC FLOWSHEET #3--MODIFIED PUREX PROCESS
for
SIMULTANEOUS RECOVERY OF URANIUM AND PLUTONIUM
from
ORNL METAL WASTE