DECLASSIFIED

ORNL 784
Declassified

MARTIN MARIETTA ENERGY SYSTEMS LIBRARIES
3 4456 0360801 3

NEUTRON AGE MEASUREMENTS IN GRAPHITE WITH GOLD RESONANCE DETECTION

CENTRAL RESEARCH LIBRARY
DOCUMENT COLLECTION

LIBRARY LOAN COPY

DO NOT TRANSFER TO ANOTHER PERSON

If you wish someone else to see this document, send in name with document and the library will arrange a loan.

OAK RIDGE NATIONAL LABORATORY
OPERATED BY
CARBIDE AND CARBON CHEMICALS DIVISION
UNION CARBIDE AND CARBON CORPORATION
UCC
POST OFFICE BOX P
OAK RIDGE, TENNESSEE

DECLASSIFIED

DECLASSIFIED

ORNL 784
This document consists of
25 pages. Copy 8 of
129, Series B.

Contract No. W-7405, eng. 26

PHYSICS DIVISION

NEUTRON AGE MEASUREMENTS IN GRAPHITE WITH GOLD RESONANCE DETECTION

W. L. Carlson*

Date Issued: NOV 7 1950

OAK RIDGE NATIONAL LABORATORY
operated by
CARBIDE AND CARBON CHEMICALS DIVISION
Union Carbide and Carbon Corporation
Post Office Box P
Oak Ridge, Tennessee

*Assigned by Navy to Oak Ridge National Laboratory from Oct. 11, 1949, to July 7, 1950.

DECLASSIFIED

MARTIN MARIETTA ENERGY SYSTEMS LIBRARIES

3 4456 0360801 3

ORNL 784
Declassified

INTERNAL DISTRIBUTION

1. G. T. Felbeck (C&CCD)
2-3. 706-A Library
4. 706-B Library
5. Biology Library
6. Health Physics Library
7. Metallurgy Library
8-9. Training School Library
10-13. Central Files
14. C. E. Center
15. C. E. Larson
16. W. B. Humes (K-25)
17. W. D. Lavers (Y-12)
18. A. M. Weinberg
19. J. A. Swartout
20. E. J. Murphy
21. F. C. VonderLage
22. A. H. Snell
23. E. H. Taylor
24. A. Hollaender
25. F. L. Steahly
26. K. Z. Morgan
27. D. W. Cardwell
28. M. T. Kelley
29. W. H. Pennington
30. E. O. Wollan
31. L. D. Roberts
32. A. S. Householder
33. J. A. Lane
34. R. N. Lyon
35. M. M. Mann
36. W. C. Koehler
37. W. K. Ergen
38. E. P. Blizard
39. W. L. Carlson
40. M. J. Skinner
41. Central Files (O.P.)

EXTERNAL DISTRIBUTION

42-49. Argonne National Laboratory
50. Armed Forces Special Weapons Project
51-52. Atomic Energy Commission, Washington
53. Battelle Memorial Institute
54. Brush Beryllium Company
55-62. Brookhaven National Laboratory
63. Bureau of Ships
64-67. Carbide and Carbon Chemicals Division (K-25)
68-71. Carbide and Carbon Chemicals Division (Y-12)
72. Chicago Operations Office
73. Columbia University (J. R. Dunning)
74-76. General Electric, Richland
77. Idaho Operations Office
78-79. Iowa State College
80-83. Knolls Atomic Power Laboratory
84-86. Los Alamos Scientific Laboratory
87. Massachusetts Institute of Technology (Kaufmann)
88-90. Mound Laboratory
91-92. National Advisory Committee for Aeronautics
93-94. National Bureau of Standards
95-99. New York Operations Office
100. North American Aviation, Inc.
101. Patent Branch, Washington
102. Sandia Laboratory
103. Santa Fe Operations Office
104-118. Technical Information Division (Oak Ridge)
119-120. USAF, NEPA
121-125. University of California Radiation Laboratory
126-129. Westinghouse Electric Company

DECLASSIFIED

I Introduction

In a nuclear power reactor neutrons emitted from the fission process of uranium 235 must be slowed down inside of the reactor by a moderator if they are to propagate the fission reaction. Because of the importance in reactor design of knowing the spatial distribution of these slowed neutrons, many studies have been made of the slowing down process. Probably the earliest successful method of treating the slowing down theory can be attributed to Amaldi and Fermi. In their model, collisions between neutrons and the nuclei of the moderator are treated as free particle collisions.

Bethe[1] has calculated that the effect of chemical binding of the moderator atoms can be neglected in the treatment of the collisions between neutrons and moderator atoms. The Fermi slowing down theory should therefore be valid for the slowing down of neutrons whose energy is less than the binding energy of a moderator atom in its lattice. The purpose of this experiment is to test the validity of the Fermi theory when applied to neutrons whose energy is less than the chemical binding of the moderator.

Graphite as a moderator is ideal for this purpose because the carbon atom is bound to the graphite lattice with an energy of about 20 ev. In all other respects graphite conforms well to the limitations imposed by the slowing down theory.

A monoenergetic source of neutrons whose energy is between 20 ev and a lower limit of 1 ev imposed by restrictions to be explained later, was not obtainable. A monoenergetic source of neutrons of about 24 kev was used therefore, and the spatial distribution of 4.8 ± 1 ev[4] gold resonance neutrons was obtained and compared by the Fermi theory to the 1.44 ev indium resonance neutron spatial distribution obtained by Roberts, Hill and McCammon.[5]

OFFICIAL USE ONLY
DECLASSIFIED

II Theory

It may be of interest to review the assumptions and limitations imposed in the derivation of the slowing down theory. Consider a fast neutron that makes an elastic collision with a stationary unbound nucleus and transfers a portion of its energy to the nucleus. The energy lost by the neutron depends upon its initial energy, the angle through which it is deflected and the mass of the nucleus. If the target atom is heavy, carbon for example, and the kinetic energy associated with it consists of thermal energy, its velocity can be neglected when compared to the velocity of a 1 ev neutron.[1] Further, if in a center of mass system the probability of the neutron being scattered in any small solid angle $d\Omega$ is a constant, it may be shown that the average loss of energy by the neutron depends only on its initial energy and the mass of the target nucleus. The average loss of logarithm of the energy per collision, ξ, is independent of the initial neutron energy and is defined as and is equal to:

$$\xi \equiv \overline{\ell n\, E_1 - \ell n\, E_2} = 1 + \frac{M}{1 - M}\, \ell n\, M \qquad (1)$$

where $M = \left(\frac{A - 1}{A + 1}\right)^2$

and

E_1 = initial energy of the neutron

E_2 = energy of the neutron after collision

A = mass of the target nucleus.

When fast neutrons are released at a constant rate from a point in an infinite medium in which the above described collisions occur, the neutrons will diffuse away from the source and slow down until they are in thermal equilibrium with the

medium. If the slowing down is treated as a continuous process and the number of neutrons lost by absorption during slowing down is negligible, the number of neutrons that slow down past energy E in one second per cm^3 at a distance r from the source is given by

$$q(r,E) = \frac{Q_o}{\left[4\pi\tau(E)\right]^{3/2}} e^{-\frac{r^2}{4\tau(E)}} \tag{2}$$

Q_o = source strength number of neutrons per sec.

$q(r,E)$ = slowing down density, i.e. number of neutrons slowing down past energy E per sec cm^3

$$\tau(E) = \text{Fermi age} = \int_E^{E_1} \frac{1}{3\xi \sum_s^2 \left(1 - \frac{2}{3A}\right)} \frac{dE}{E} \tag{3}$$

$\sum_S = N\sigma_S$ = macroscopic cross section for scattering

N = number of target nuclei per cm^3

σ_S = microscopic cross section for scattering

E_1 = initial neutron energy

E_d = energy of neutron at detection.

If σ_S is independent of neutron energy, $\tau(E)$ may be integrated to give

$$\tau(E) = \frac{1}{3\sum_S^2 \xi \left(1 - \frac{2}{3A}\right)} \ell n \frac{E_1}{E_d} = K \ell n \frac{E_1}{E_d} . \tag{4}$$

Treating the slowing down of neutrons as a continuous process rather than a discontinuous process introduces the largest error when one attempts to find the slowing down density for age zero, or at distances far from the source for any

energy above thermal energies.[2,7]

Because the slowing down density is related to the neutron flux, foil activation measurements can be used to determine the slowing down density. The relation is given below:

$$Q(r,E)dE = \frac{q(r,E)dE}{\sum_s \xi_E} \tag{5}$$

where $Q(r,E)$ denotes the neutron flux and is identically equal to $n(r,E)v$

$n(r,E)dE$ = number of neutrons per cm^3 in energy range dE

v = scalar value of the neutron velocity (cm per sec).

For the purposes of this experiment, foil activations determined at various distances from the source were plotted, and $\tau(E)$ was determined from the slope. The 4.8 ± 1 ev neutron age can be compared to the age of 147 cm^2 for 1.44 ev neutrons determined by Roberts, Hill and McCammon by equation (4)

$$\tau_{Au} - \tau_{in} = K \ln \frac{E_o}{E_o} \frac{Au}{in}$$

$$\tau_{Au} - 147 = 15.425 \ln \frac{4.8 \pm .1}{1.44} \tag{6}$$

III Equipment and Techniques

Except for the gold foils and counting instruments the equipment was the same as used by Roberts, Hill and McCammon and much of the following data were obtained from their report.[5]

1. Graphite column.

The 6' x 6' x 11' column shown in Fig. 1 was composed of 4" x 4" graphite stringers, the central stringers along the vertical axis were removable for inserting the foils. Its size was such that it was effectively infinite in size for the neutron ages investigated. The average density of the graphite was 1.652 g/cm^3. The scattering cross section of the carbon is 4.59×10^{-24} cm^2.

2. Neutron source.

Practically monoenergetic neutrons were obtained from a source consisting of about 1 curie of antimony inside of a spherical shell of beryllium. The shell had an overall diameter of about 2.5 cm and weighed 9.24 grams.

Because the antimony has a rather high capture cross section for neutrons, a depression of the flux might be expected within a couple of mean free paths from the source. The absorptions of its own neutrons may also affect the half life of the antimony. This change is shown in appendix 1 to be less than 0.0067% and will therefore not affect the 60 day half life of the source appreciably.

3. Detecting Foils.

Gold foils measuring 4 x 6.35 cm and 103.1 mg/cm^2 thick were used to detect the 4.8 ev neutron flux. The maximum difference in the weight was 6%. During the exposure, the foils were enclosed in cadmium boxes shown in Fig. II to shield them from thermal flux.

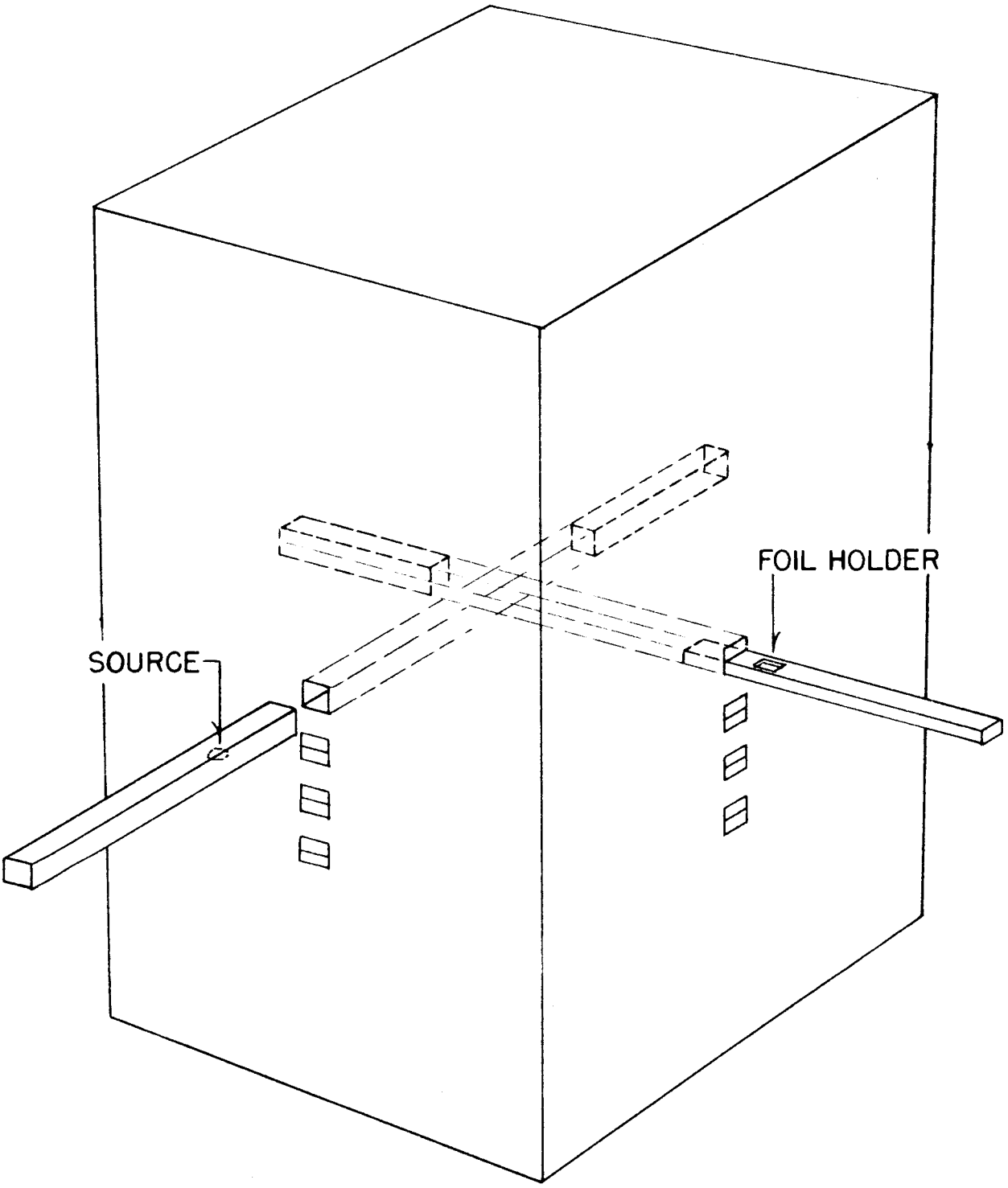

FIG. I

GRAPHITE COLUMN

FIG. II

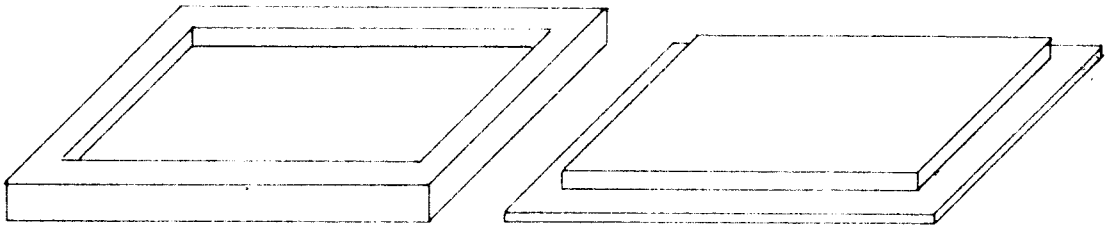

CADMIUM BOX

FIG. III

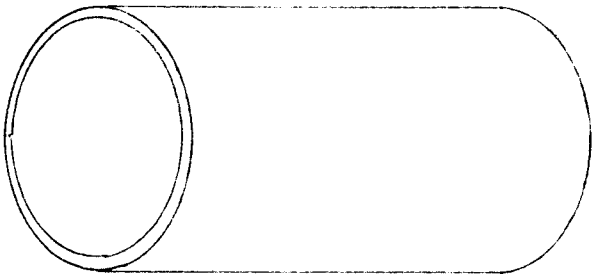

FOIL HOLDER CYLINDER

FIG. IV

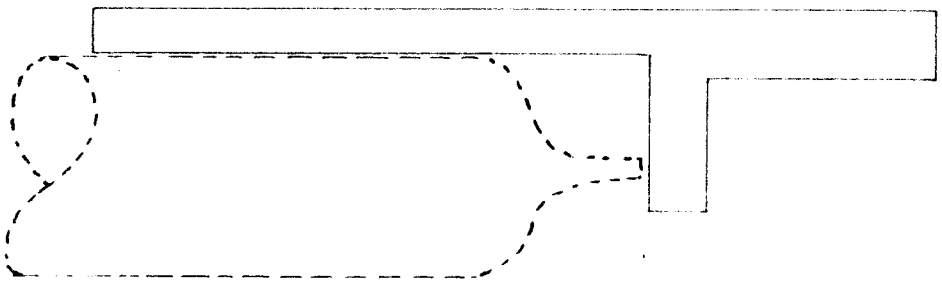

POSITIONING JIG

IV Counting Equipment

Two thin wall glass Geiger Mueller tubes enclosed in a 2" thick lead chamber to reduce the background counts were connected through preamplifiers to scales of 64. The tubes were normalized with activated gold foils over a range of counting rates that varied between 5,000 to 15,000 counts per minute. The normalization factor was found to be constant over this range of counting rates.

Frequent counts were taken of two long half life foil standards to ascertain that the counting efficiencies of the instruments were constant. The two standards used were a Ru^{106} β^- emitter with a half life of one year and a natural uranium foil.

Neutron Flux Measurements

The isotopic neutron flux was detected in the following manner. Foils protected from the thermal flux by cadmium boxes were inserted at a number of positions along the principal axis of the graphite column. During the exposure time which consisted of about three days, the foils were oriented in the plane perpendicular to the principal axis of the column. After this activation time they were removed from the column and from the cadmium boxes, wrapped inside of aluminum cylinders, shown in Fig. III and positioned on the Geiger Mueller tubes by a jig shown in Fig. IV, and counted for about eight hours. Immediately after one side of the foils had been counted, they were inverted and a similar count taken from the other side. By use of the normalization equation given in appendix 3 the counts obtained from the foils were converted to activity based on a 21.65 day exposure. The calculated activity of both sides of the foil was averaged to eliminate the current component of the flux. It is this averaged activity that is

proportional to the isotropic flux[5,7]. These data are given in column 7 of Table I.

To evaluate the condition of the graphite column, indium foils were similarly exposed at a few positions in the column and counted. The calculated activities of the foils were compared with the activities reported by Roberts et al for these positions. A tabulation of these measurements are given with their data in Table II.

Experimental Results

A plot of the logarithm of the foil activity versus radii squared is given in Fig. V. A Gaussian distribution, equation 2, in these coordinates will appear as a straight line with a slope of $-1/4\tau(E)$.

The neutron age may be obtained quite reasonably as 128 ± 2 cm^2 from the slope of the central portion of the curve. Near the origin much of the deviation from equation 2 may be attributed to the higher energy absorption resonances in gold[5]. At a radius of about 22 cm this effect becomes negligible and the curve conforms quite well to a simple Gaussian out to a radius of about 45 cm.

The experimental difference between the indium resonance and gold resonance neutron ages is 19 ± 2 cm^2. By the use of equation 6 the calculated age difference between $4.8 \pm .1$ ev neutrons and 1.44 ev neutrons is $18.6 \pm .3$ cm^2. These results then indicate that within the accuracy of this experiment the Fermi slowing down model is valid for neutrons slowing down in graphite from 4.8 ev to 1.44 ev.

TABLE I

Distance of foil from Neutron Source		Side of Foil*	Measured Activity of Gold Foil exposed in Cadmium boxes x 1.2120				
r - cm	r^2 - cm^2		Test 1	Test 2	Test 3	Average	Log Average
3.551	12.61	a	9491	9457	9454	9161	3.9619
		b	9485	7870	9211		
11.171	124.79	a	7870	7938	7767	7689	3.8858
		b	7557	7543	7460		
13.71	187.96	a	5450	5379	5580	5338	3.7274
		b	5264	5113	5244		
18.79	353.06	a	4361	3272	3896	3596	3.5558
		b	3267	3289	3490		
23.82	567.4	a	2189	2299		2146	3.3316
		b	2079	2018			
28.90	835.20	a	1284	1356	1347	1239	3.0931
		b	1134	1170	1145		
33.98	1154.6	a	712.5	695.3		650.7	2.8134
		b	604.6	590.5			
41.60	1730.5	a	279.8	185.0	239.4	210.0	2.3222
		b	175.7	183.0	185.2		
44.14	1948.3	a	160.8	161.5	160.0	150.3	2.1770
		b	138.7	138.3	142.3		
49.30	2430.4	a	62.37	67.33		60.05	1.7785
		b	56.59	53.92			

*a = Surface facing source
b = Surface facing away from source.

TABLE II

Distance of foil from neutron source		Measured saturated activity of indium foil covered with cadmium		
		Check Points	Roberts, Hill, McCammon	
r-cm	r^2-cm^2	Act(r,E) x 1.0912	Act(r,E)	Log_{10}Act(r,E)
3.551	12.61	3590	3529	3.54720
6.091	37.10	3236	3162	3.50001
8.631	74.49	2924	2836	3.45271
11.171	124.79		2563	3.40870
13.71	187.96		2240	3.35017
16.25	264.06		1906	3.28007
18.79	353.06		1581	3.19846
21.33	454.97		1276	3.10584
23.02	529.9		1122.8	3.05030
23.82	567.4	1030	1051.2	3.02168
28.10	789.6		711.3	2.85205
28.90	835.20		656.3	2.81713
33.18	1100.9		410.8	2.61363
33.98	1154.6	365.0	373.8	2.57262
38.26	1463.8		217.0	2.33646
39.04	1524.1		197.4	2.29542
43.34	1878.4		113.3	2.05423
48.42	2344.5		52.09	1.71675
49.27	2427.5		47.67	1.67822
53.50	2862.3		26.65	1.42570
54.35	2953.9		21.50	1.33245

Corrections

The use of a spherical neutron source and finite size detector foils instead of a point source and point detectors have no effect on the results of this experiment. Roberts, et al[5] have shown that the effect of the spherical neutron source is to change the constant of proportionality between the foil activation and the neutron slowing down density. They also stated that a similar analysis, which is given in Appendix 2, would demonstrate that the only effect of the finite foils is to again change the proportionality constant. Because the absolute value of the neutron slowing down density is not of importance in this experiment, the corrected constant was not evaluated.

Unfortunately foils become activated by neutrons whose energies are not within the resonance energy range, i.e. resonance energy minus to resonance energy plus one half the average energy loss per collision. To correct for this non-resonance activation it is required that the variation of capture cross section with neutron energy be known.

Such a correction was attempted following the analysis given in Appendix 4 and using for the capture cross section for gold the Breit Wigner formula

$$\sigma(E) = \frac{1}{4}\sqrt{\frac{E_o}{E}} \quad \frac{\sigma_o \Gamma^2}{(E - E_o)^2 + \frac{\Gamma^2}{4}}$$

where E_o = 4.8 ev, the neutron energy for resonance peak

Γ = .481 ev, the nuclear energy level width

σ_o = 2700 barns, the capture cross section at resonance peak.

This procedure resulted in a corrected age for the gold resonance neutrons of 127 cm^2. Because the values of Γ is perhaps much smaller than .481 ev, the corrected age should perhaps be somewhere between 127 cm^2 and 128 cm^2.

UNCLASSIFIED
DWG. 9174

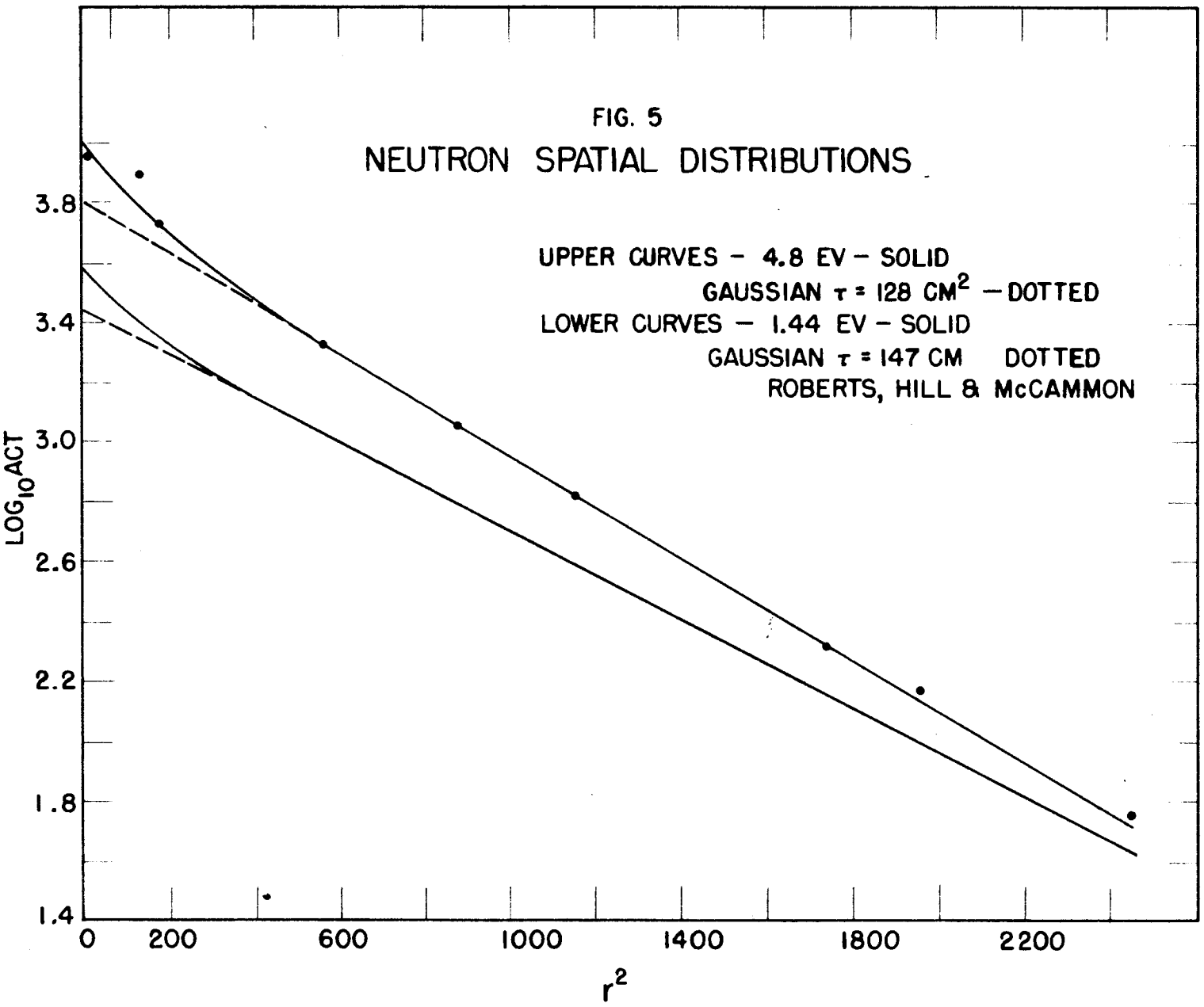

Acknowledgements

Indebtedness is gratefully acknowledged to the following personnel of the Oak Ridge National Laboratory.

Dr. E. C. Campbell for suggesting the experiment and the assistance given on the theory involved.

Dr. L. D. Roberts for the use of his equipment and the data on the indium resonance neutron distribution. Special gratitude is expressed for his interest and the generous contribution of his experience and time for discussion.

Dr. E. O. Wollan, Associate Director of the Physics Division, for the critical suggestions made regarding the composition of this paper.

This report has been submitted to the Graduate School of Annapolis Naval Academy as a thesis for the Master of Science Degree.

Bibliography

1. Bethe, H. A., Nuclear Physics, Reviews of Modern Physics 9, 71-244 (1937).

2. Christy, R. F., The Slowing Down of Neutrons, Los Alamos Lecture Series, LA-24.

3. Havens, W. W., Jr., and J. Rainwater, The Slow Neutron Cross Sections of Indium, Gold, Silver, Antimony, Lithium and Mercury as Measured with a Neutron Beam Spectrometer, Phys. Rev. 70, 154-173 (1946).

4. Havens, W. W. Jr., C. S. Wu, L. J. Rainwater and C. L. Meeker, Slow Neutron Velocity Spectrometer Studies II. Au, In, Ta, W, Pt, Zr, Phys. Rev. 71, 165-173 (1947).

5. Roberts, L. D., J. E. Hill and G. McCammon, A Study of the Slowing Down Distribution of Sb^{124}-Be Photoneutrons in Graphite and the Use of Indium Foils, ORNL-201.

6. Sachs, Russell B., A. Wattenberg and R. Fields, Yields of Neutrons from Photoneutron Sources, Phys. Rev. 73, 545-549 (1948).

7. Soodak, H., E. C. Campbell, Elementary Pile Theory, John Wiley and Sons, New York 1950.

APPENDIX

1. To show that the absorption of neutrons affects the antimony half life a negligible amount, the assumption is made that every neutron produced by the source is self absorbed. Wattenberg[6] states that approximately one half of the antimony disintegrations produce the 1.8 Mev γ-ray. In the same article the cross section of the γ(Be-n) reaction is given as 9.7×10^{-28} cm^2.

The approximate rate of forming neutrons is given by

$$\frac{N\lambda}{2} \cdot (1 - e^{-N_{Be}\,\sigma_{aBe}T_{Be}})$$

T_{Be} = thickness of Be shell

λ = decay constant for antimony

$N\lambda$ = $\left|\text{rate of decay of the antimony}\right|$

N_{Be} = $.317 \times 10^{-24}$ Be atoms per cm^3

$\sigma_{a_{Be}}$ = 0.4365 cm, thickness of Be

$$\text{rate} = \frac{N\lambda}{2}\,(1 - e^{-0.000134}) = 0.000067\,N\lambda.$$

The actual rate of decay of the antimony may be obtained from

$$\frac{dN}{dt} = -\lambda N + \frac{\lambda N}{2}\,(1 - e^{-0.000134})$$

$$\frac{dN}{dt} = -\lambda N(1 - 0.000067)$$

and

$$\lambda\,\text{apparent} = (1 - 0.000067)\,\lambda$$

2. To show that no foil geometry corrections are necessary, the following assumptions are made.

a. Point neutron source, proof that the actual source appears as a point source is given in ORNL-201.

b. Circular, thin foils.

c. The spatial resonance flux distribution is Gaussian.

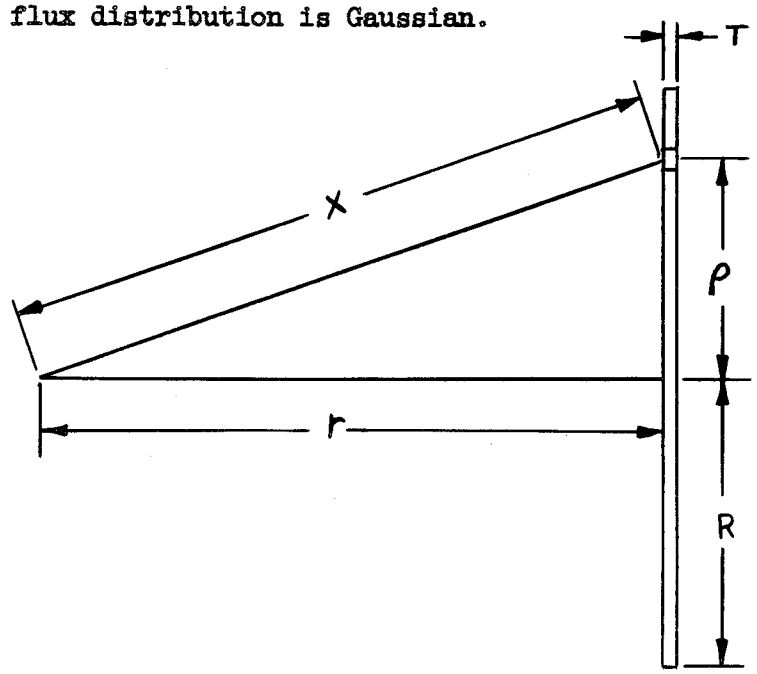

R = radius of foil

T = thickness of foil

r = distance of foil from source

$$\varphi(E_o r) = \frac{q}{\xi \sum_s E_o} \quad \frac{Q_o\, e^{-x^2/\tau(E_o)}}{\xi \sum_s E_o \left[4\pi\, \tau(E_o)\right]^{3/2}}$$

$$x^2 = r^2 + \rho^2$$

$$\int_{vol} dA = \frac{4\tau(E_o)\pi \quad Q_o\, N \sigma_a T\, e^{-r^2/4\tau(E_o)}}{\xi \sum_s E_o (4\pi\, \tau(E_o))^{3/2}} \int_0^R e^{-\rho^2/4\tau(E_o)} \cdot 2\rho/4\tau(E_o) d\rho$$

$$B = \frac{4\tau(E_o)\pi \quad Q_o\, N \sigma_a\, T}{\xi \sum_s E_o \left[4\pi\, \tau(E_o)\right]^{3/2}}$$

$$A_{ct} = B \left[1 - e^{-R^2/4\tau(E_o)}\right] \quad e^{-r^2/4\tau(E_o)}$$

Since R^2 and $\tau(E_o)$ are to be constant the total foil activation varies with distance from the source as $e^{-r^2/4\tau(E_o)}$.

3. All foils were corrected to the activation expected if they had been placed in the column the first day, exposed for 21.9 days and counted immediately.

N_a = number per cm^3 of Au^{197}

N = number per cm^3 of active gold atoms

λ_1 = antimony decay constant = 0.0155/day.

λ_2 = gold decay constant = 0.2567/day.

The source strength varies with time as

$$\varphi(t) = A\, e^{-\lambda_1 t}$$

If the number of Au^{198} atoms formed is small compared to the number of Au^{197} originally present, the rate of formation of Au^{198} may be expressed as

$$\frac{dN}{dt} = -\lambda_2 N + N_a \sigma_a \varphi(t)$$

but $N_a \sigma_a$ is considered constant; therefore let $A\, N_a \sigma_a = B$

$$\frac{dN}{dt} + \lambda_2 N = B\, e^{-\lambda_1 t}$$

The boundary condition is that $N = 0$ when $t = 0$.

The number of Au^{198} nuclei formed at any time t, is then

$$N_1 = \frac{B}{\lambda_2 - \lambda_1} \left(e^{-\lambda_1 t_1} - e^{-\lambda_2 t_1}\right)$$

When the foils are removed from the column, the gold decays as

$$\frac{dN}{dt} = -N \lambda_2$$

The number present N_2 at the end of this cooling interval t_2 will be

$$N_2 = \frac{B}{\lambda_2 - \lambda_1} \left(e^{-\lambda_1 t_1} - e^{-\lambda_2 t_1}\right) e^{-\lambda_2 t_2}$$

The counts obtained, C, in the counting interval t_3 will depend upon the counter efficiency α.

$$C = -\alpha \int_0^{t_3} \frac{dN}{dt}\, dt = -\alpha N_2 \lambda_2 \int_0^{t_3} e^{-\lambda_2 t}\, dt$$

$$C = \alpha \frac{B}{\lambda_2 - \lambda_1} \left(e^{-\lambda_1 t_1} - e^{-\lambda_2 t_1}\right) e^{-\lambda_2 t_2} \left(1 - e^{-\lambda_2 t_3}\right)$$

The maximum number of counts that could be obtained would occur if t_1 were equal to $-\frac{\ln \lambda_2/\lambda_1}{\lambda_1 - \lambda_2}$, t_2 equal to zero and t_3 equal to infinity. For the decay constants given for antimony and gold, t_1 for maximum activation in the column is 21.9 days.

$$C_{max} = \frac{\alpha B}{\lambda_2 - \lambda_1} \left(e^{-21.9 \lambda_1} - e^{-21.9 \lambda_2}\right)$$

By forming the ratio of maximum counts to the actual counts and multiplying by the gold decay constant, the activity normalization factor for 21.9 days exposure time and zero cooling time is obtained.

$$A_{max} = \frac{\lambda_2 \left[C \left(e^{-21.9 \lambda_1} - e^{-21.9 \lambda_2}\right)\right]}{\left(e^{-\lambda_1 t_1} - e^{-\lambda_2 t_1}\right) e^{-\lambda_2 t_2} \left(1 - e^{-\lambda_2 t_3}\right)}$$

To correct the activity to that which would have been attained if the foils had been inserted into the column on the 1st day, Act_{max} must be multiplied by the source factor $1/e^{-\lambda_1 t_d}$. The t_d is the time elapsed between the insertion of the first foil on the first day and the insertion into the column of the foil one wishes to normalize.

The normalizing equation becomes

$$Act_{(\substack{max \\ 1st\ day})} = \frac{\lambda_2 C \left[e^{-21.9\lambda_1} - e^{-21.9\lambda_2} \right]}{(e^{-\lambda_1 t_1} - e^{-\lambda_2 t_1})\, e^{-\lambda_2 t_2} (1 - e^{-\lambda_2 t_3})\, e^{-\lambda_1 t_d}}$$

4. To account for low energy gold activation the following analysis is applied.

$d\Omega$ = differential solid angle

u = $\cos\theta$

ds = differential area

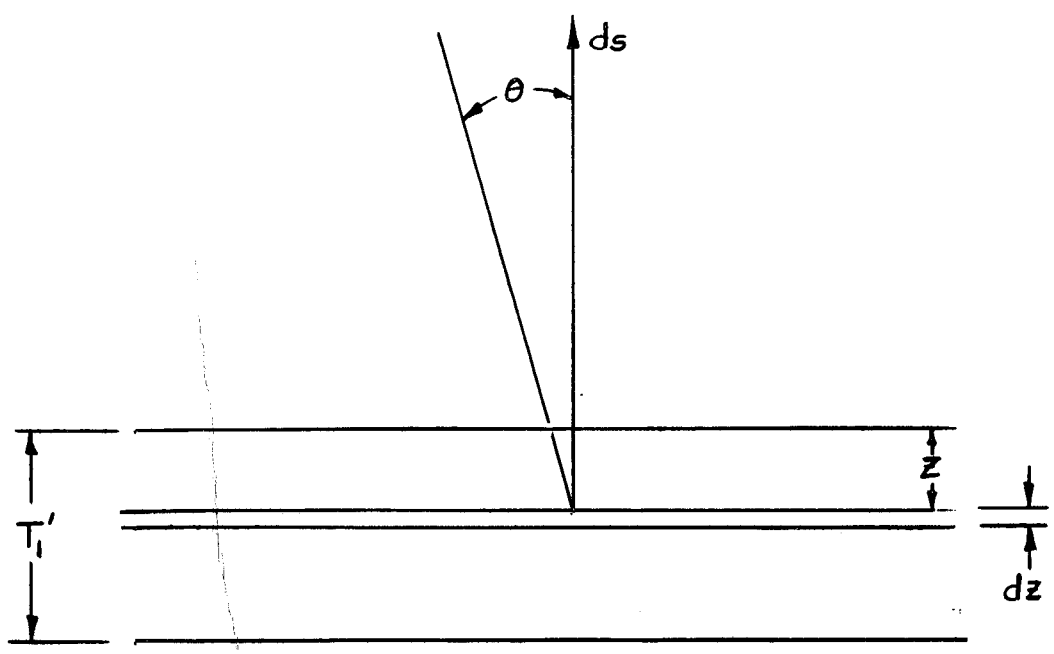

Assumptions:

a. Isotropic flux.

b. The scattering cross sections of the shield and foil materials can be neglected.

c. Absorption of neutrons of energy E does not perturb the neutron flux at any lower energy.

d. Plane geometry.

Consider the foil at position r_o

(1) $\varphi(E,r_o)dE$ = number of neutrons with energies between E and E + dE which cross unit area per second.

(2) $\varphi(E,r_o)dE\ u\ \frac{d\Omega}{4\pi}$ = number of neutrons with energies between E and E + dE which cross unit area normal to the foil per second in the solid angle $d\Omega = 2\pi\ du$.

(3) $\varphi(E,r_o)dE\ u\ \frac{d\Omega}{4\pi}\ e^{-N_1\sigma_1 z/u}$ = the number of these neutrons which penetrate the shield to a depth of z cm per second if σ_1 is the absorption cross section and N_1 is the number of absorbing atoms/cm^3 of shielding material.

(4) Of the neutrons that penetrate this far the number absorbed in layer dz cm thick per second is

$$\varphi(E,r_o)dE\ u\ \frac{d\Omega}{4\pi}\ e^{-N_1\sigma_1 z/u}\ \frac{N\sigma\,dz}{u}$$

or as $2\pi\ du = d\Omega$

$$\varphi(E,r_o)dE\ u\ \frac{du}{2}\ e^{-N_1\sigma_1 z/u}\ \frac{N\sigma\,dz}{u}$$

(5) $\varphi(E,r_o)dE\ u\ \frac{du}{2}\left[-\int_0^t e^{-N_2\sigma_1 z/u}\left(-\frac{N\sigma}{u}dz\right)\right]$

$= \varphi(E,r_o)\ u\ dE\ \frac{du}{2}\left[1 - e^{-N_1\sigma_1 T_1/u}\right]$ = number per sec absorbed in thickness T_1 in angle du.

(6) $\varphi(E,r_o)u\ \frac{du}{2}\ dE\ e^{-N_1\sigma_1 T_1/u}$ = number of neutrons with energies between E and E + dE getting through one cm^2 of shield per second with angle du about u.

(7) By applying similar reasoning to the neutron absorption in the foil and multiplying the result by a factor of 2 to account for activation from the other side the activation becomes

$$\varphi(E,r_o)u\ e^{-N_1\sigma_1 T_1/u}\left[1 - e^{-N'\sigma' T'/u}\right]dE\ du$$

where $N'\sigma' T'$ refers to the gold foil.

(8) Since $\varphi(E,r_o)$ is independent of u, the equation in (7) may be integrated over u with limits of 0 to 1. By a change of variable $u = \frac{1}{Y}$ the activation becomes

$$A\Big]_{\substack{Cd\\ \text{cut off}}}^{20,000\text{ ev}} = \int_{\substack{Cd\\ \text{cut off}}}^{20,000\text{ ev}} \frac{\varphi(E,r_o)}{2}\Big[e^{-N_1\sigma_1 T_1} - N_1\sigma_1 T_1\ e^{-N_1\sigma_1 T_1} - (N_1\sigma_1 T_1)^2\ E_i(-N_1\sigma_1 T_1)$$

$$- e^{-(N_1\sigma_1 T_1 + N'\sigma' T')} + (N_1\sigma_1 T_1 + N'\sigma' T')\ e^{-(N_1\sigma_1 T_1 + N'\sigma' T')}$$

$$+ (N_1\sigma_1 T_1 + N'\sigma' T')^2\ E_i(-N_1\sigma_1 T_1 - N'\sigma' T')\ dE$$

where $- E_1 (-x) = \int_x^{\infty} \frac{e^{-t}}{t} dt$

σ_1 and σ' are functions of energy

$$\varphi(E, r_o) = \frac{e^{-r_o^2/4\tau(E)}}{\left[4\pi\tau(E)\right]^{3/2} \xi E \sum_s}$$

$\sum_s$ and ξ to be evaluated for graphite.

(9) The correcting factor used is

$$\eta = \frac{\left.\begin{matrix}(4.8 \quad 0.34) \text{ ev} \\ \\ (4.8 - 0.34) \text{ ev}\end{matrix}\right] A}{\left.\begin{matrix}20{,}000 \text{ ev} \\ \\ \text{Cd cut off}\end{matrix}\right] A}$$

DECLASSIFIED