MARTIN MARIETTA ENERGY SYSTEMS LIBRARIES
3 4456 0360802 2

[redacted]

ORNL 801
Chemistry-Separation Processes for Plutonium and Uranium 9a

INVENTORY 1953
CENTRAL RESEARCH LIBRARY
DOCUMENT COLLECTION

TRIBUTYL PHOSPHATE AS AN ALTERNATE SOLVENT FOR EXTRACTION OF "25" FROM SPENT MTR FUEL ASSEMBLIES

LABORATORY RECORDS

CENTRAL RESEARCH LIBRARY
DOCUMENT COLLECTION

LIBRARY LOAN COPY

DO NOT TRANSFER TO ANOTHER PERSON

If you wish someone else to see this document, send in name with document and the library will arrange a loan.

OAK RIDGE NATIONAL LABORATORY
OPERATED BY
CARBIDE AND CARBON CHEMICALS DIVISION
UNION CARBIDE AND CARBON CORPORATION
UCC
POST OFFICE BOX P
OAK RIDGE, TENNESSEE

[redacted]

[redacted]

Report Number: ORNL-801

This document consists of
12 pages.
Copy 9 of 100 Series A.

Contract No. W-7405, eng 26

CHEMICAL TECHNOLOGY DIVISION

LABORATORY SECTION

TRIBUTYL PHOSPHATE AS AN ALTERNATE SOLVENT FOR EXTRACTION OF "25" FROM SPENT MTR FUEL ASSEMBLIES

T. C. Runion

Work by:
T. C. Runion, J. L. Bamberg
V. L. Fowler

CLASSIFICATION CHANGED TO: DECLASSIFIED
BY AUTHORITY OF: TID-1148
BY: R. Morrison 7/10/57

DATE ISSUED

SEP 26 1950

OAK RIDGE NATIONAL LABORATORY
Operated by
CARBIDE AND CARBON CHEMICALS DIVISION
Union Carbide and Carbon Corporation
Post Office Box P
Oak Ridge, Tennessee

[redacted]

[redacted]

[redacted]

MARTIN MARIETTA ENERGY SYSTEMS LIBRARIES
3 4456 0360802 2

Abstract

The feasibility of a one-cycle solvent extraction process, using tributyl phosphate, for the recovery and decontamination of uranium-235 from spent MTR fuel assemblies has been shown on a laboratory scale.

[redacted]

Introduction

After about 20% burn-up in the MTR, aluminum-uranium 235 fuel assemblies will be dissolved in nitric acid for subsequent recovery and decontamination of the unspent uranium.

A two cycle solvent extraction process for this purpose using methyl isobutyl ketone (MIBK) as a solvent has been satisfactorily demonstrated on a pilot plant scale (ORNL-676) and has been recommended for plant scale processing of MTR assemblies and other aluminum-uranium 235 fuels.

Tributyl phosphate, as a solvent for uranium separation from fission products, has had such marked success in other recovery processes (ORNL-258, 260, 479, 557) that its investigation as an alternate solvent for MIBK was felt to be warranted.

Summary

The recovery and decontamination of uranium 235 from MTR fuel assemblies has been demonstrated in one cycle laboratory counter-current runs using a solvent extraction process employing tributyl phosphate. The process offers the following advantages over the use of methyl isobutyl ketone as a solvent:

1. Beta decontamination factors of 10^6 are obtained for a one cycle process, involving fission activity of 6 months cooling. Two cycles are required to obtain this degree of separation with MIBK.

2. The solvent to aqueous flow ratio is 1:8 in extraction, 2:1 in

Summary (continued)

stripping, yielding a volume reduction factor for the "25" product of about 16 over the one solvent extraction cycle. Even greater volume reductions are possible, but difficult to demonstrate in the laboratory at this activity level.

3. Tributyl phosphate - Gulf BT mixtures have a flash point of greater than 150°F while that of MIBK is less than 70°F.

4. Tributyl phosphate - "Varsol" mixtures are chemically stable in 9 N nitric acid whereas decomposition of MIBK occurs at a much lower acid concentration.

5. Any degree of acidity less than neutral is satisfactory for achieving adequate decontamination with tributyl phosphate, whereas the use of MIBK requires that feed solutions be quite closely controlled at 0.2 M acid deficient.

6. The strong specificity of tributyl phosphate for uranium extraction yields a "25" product of extreme purity in reference to such ions as iron, aluminum and chromium.

7. Nitric acid is used for the scrub stream instead of aluminum nitrate, thus decreasing the amount of solids in the wastes.

8. Ammonium fluosilicate* is used in the scrub stream for plutonium

* See Report HW 15231, The Use of Fluosilicate to Improve Plutonium Decontamination in the TBP Metal Recovery Process - Robert L. Moore

separation. This eliminates the use of ferrous ion which is relatively unstable in the process solutions. The "25" process using MIBK must employ ferrous ion for this purpose since ammonium fluosilicate is ineffective in the presence of aluminum nitrate.

Experimental

The fission activity used in these experiments was obtained from dissolver feed solutions from 6 months cooled Chalk River irradiated uranium. After diluting by a factor of about one thousand, to 8×10^6 c/m/ml, this activity was spiked into $Al(NO_3)_3$ and the acidity adjusted with NaOH.

The tributyl phosphate used as solvent was diluted with Gulf BT, a petroleum fraction containing principally paraffinic hydrocarbons. Prior to use, the mixture was washed with two one-tenth volumes of 0.3 M NaOH and two water washes.

Necessary equilibrium data for outlining the optimum process conditions were obtained in preliminary batch studies. The effect of the concentrations of TBP, $Al(NO_3)_3$ and HNO_3, (both excess and acid deficient) on uranium and gross fission product distribution coefficients was demonstrated (see Table I). From these data it was apparent that the $Al(NO_3)$ present from the dissolved assembly was an excellent "salting agent" and that neutral or "acid deficient" solution gave satisfactory uranium extraction. The optimum aluminum concentration was about 1.2M. Fission

Experimental (continued)

product decontamination was improved upon lowering the acidity but no further improvement was observed on making the solutions more acid deficient than 0.01 M.

Although 3.0% TBP (by volume) was an adequate solvent concentration for complete uranium recovery in a simple $Al(NO_3)_3$ system, the incorporation of ammonium fluosilicate in a nitric acid scrub stream necessitated the use of a 4.5% TBP mixture to prevent excessive uranium reflux. The flow ratios in extraction were adjusted to provide approximately 60% uranium saturation at the feed plate (see Figure I).

The six counter-current runs shown in Table II represent consecutive attempts to improve the process. The final run, however, does not necessarily represent an optimum flowsheet and further laboratory development should be continued.

Recommendations

It is recognized that a certain amount of pilot plant scale development is necessary before a process is scaled up to plant size operation. Because of time schedules involved in the present operation at Arco, it is believed that the installation of the present "25" process should be completed since the equipment will accommodate any alternate solvent extraction process with only slight modification.

However, because of the obvious advantages of TBP as a solvent, it is recommended that further laboratory and pilot plant effort be applied to this proposed process.

Acknowledgment

The author acknowledges his appreciation to L. T. Corbin and associates of the Analytical Division of the Chemistry Division for the necessary analyses in conjunction with this work.

T. C. Runion

T. C. Runion

Table I

Uranium, Gross Beta Activity and HNO_3 Extraction as a Function of $Al(NO_3)_3$ and HNO_3 Concentration

Aqueous Phase Composition (M)			Vol. % TBP in Solvent	Distribution Coefficient (organic/aqueous)		
$Al(NO_3)_3$	HNO_3*	U		U	Gross Beta	HNO_3
1.62	-0.02 **	0.0047	1	3.1	6.4×10^{-5}	--
			5	--	0.035	
			10	110.	0.40	
			15	~ 890.	1.3	
	-0.10 **	0.0047	1	2.9	7.2×10^{-5}	--
			5	71.	0.034	
			10	110.	0.43	
			15	~ 890.	1.2	
1.61	-0.03	0.0050	1	4.4	--	--
			3	83.		
			5	220.		
			10	~ 790.		
1.55	0.35	0.0055	1	--	2.6×10^{-3}	--
			5		0.09	
			10		0.16	
			15		0.40	
			20		0.69	
1.43	-0.29	0.0045	1	2.8	5.3×10^{-5}	--
			3	25.	3.1×10^{-3}	
			5	50.0	2.7×10^{-2}	
			10	~ 500.0	3.7×10^{-1}	
1.41	0.31	0.0052	1	3.3	--	0.08
			5	120.		0.34
			10	420.		0.67
			15	~ 740		0.87
			20	~ 1200.		1.2

* Minus sign indicates acid deficiency, i.e. hydrolyzed $Al(NO_3)$.

** Values for uranium distribution coefficients were not appreciably different at -0 26 N HNO_3.

(continued)

[redacted]

Table I (Continued)

Aqueous Phase Composition (M)			Vol. % TBP in Solvent	Distribution Coefficient (organic/aqueous)		
$Al(NO_3)_3$	HNO_3	U		U	Gross Beta	HNO_3
1.26	-0.04	0.0038	1 3 5 10	1.7 15. 54. 200.	--	--
	-0.27	0.0038	1 3 5 0	1.4 9.5 37. 110.	--	--
1.03	0.27	0.00366	1 5 10 15 20	--	4.6×10^{-5} 6.0×10^{-3} 1.7×10^{-2} 0.12 0.25	--
0.95	-0.29	0.0030	1 3 5 10	0.48 2.4 8.5 34.	2.9×10^{-5} 5.5×10^{-4} 3.5×10^{-3} 3.7×10^{-2}	--
0.94	0.24	0.0035	1 5 10 15 20	1.0 30. 99. 160. 280.	--	0.04 0.26 0.39 0.61 0.90
0.52	0.18	0.0019	1 5 10 15 20	--	3.1×10^{-5} 1.3×10^{-3} 1.1×10^{-2} 2.7×10^{-2} 5.7×10^{-2}	--
0.47	0.17	0.0017	1 5 10 15 20	0.14 3.1 13. 23. 33.	--	0.03 0.09 0.18 0.29 0.41

[redacted]

[redacted]

Table II

TBP Recovery and Decontamination of "25" from Spent MTR Fuel Assemblies

(Laboratory Counter Current Runs involving Fission Activity of six months cooling)**

7 extraction stages
4 scrub stages

AF - Extraction column feed
AX - Extracting Solvent = TBP
AS - Extraction column scrub
BX - Stripping solution = demineralized H_2O

Feed Composition (M)		Scrub Composition(M)***		Solvent	Flow Ratios	Beta Activity(c/m/mg/U)			Extraction	Feedplate Solvent
$Al(NO_3)_3$*	HNO_3	$Al(NO_3)_2$	H^+	% TBP	AF:AX:AS:BX	Feed	At Feed Plate	After Scrubbing	U Loss %	Saturation (%)
1.04	0.01	1.00	0.04	3.0	50:5 :5 :2.5	3.8×10^6	1370	79	1.0	49
1.21	-0.03	1.19	-0.03	3.0	50:5 :5: 2.5	8.6×10^6	923	83	0.37	74
1.23	-0.02	1.28	-0.01	3.5	50:5 :5:	7.8×10^6	1440	335	0.01%	74
1.24	-0.22	None	3.7	3.5	40:5 :2.5:	7.5×10^6	1070	63	1.00	69
1.22	-0.08	None	3.0	4.5	40:5 :1 :	1.4×10^7	6590	88	0.4	56
1.18	-0.10	None	2.5	4.5	40:5 :1 :	5.5×10^6	1000	10	0.01%	54

* Uranium concentration is about 0.7 g/mole of Al.

** Dissolver solution of Chalk River irradiated uranium was diluted 1000 fold with $Al(NO_3)_3$ to provide the various run feeds.

*** One gram per liter of $(NH_4)_2 Si F_6$ in all runs.

[redacted]

[redacted]

Drawing No. 9498
ORNL-801

Figure I

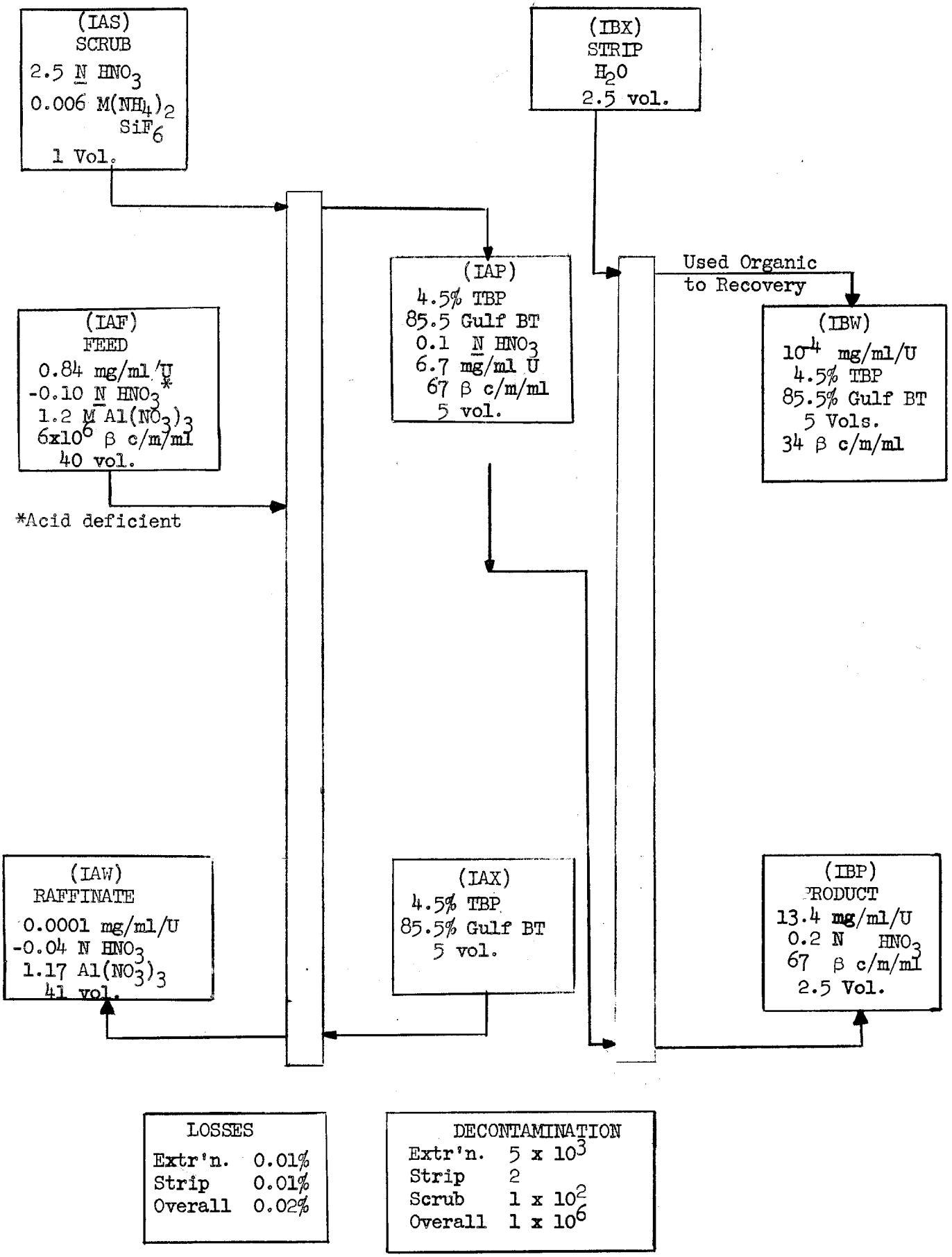

LOSSES	
Extr'n.	0.01%
Strip	0.01%
Overall	0.02%

DECONTAMINATION	
Extr'n.	5×10^3
Strip	2
Scrub	1×10^2
Overall	1×10^6

TBP PROCESS FOR "25" RECOVERY FROM SPENT MTR FUEL ASSEMBLIES AFTER 150 DAYS COOLING