[redacted]

MARTIN MARIETTA ENERGY SYSTEMS LIBRARIES
3 4456 0360806 8

ORNL 794
Reactors
8A

LABORATORY RECORDS
1954

MIXING IN THE CORE OF THE HRE

OAK RIDGE NATIONAL LABORATORY
CENTRAL RESEARCH LIBRARY
CIRCULATION SECTION
4500N ROOM 175
LIBRARY LOAN COPY
DO NOT TRANSFER TO ANOTHER PERSON
If you wish someone else to see this report, send in name with report and the library will arrange a loan.
UCN-7969 (3 9-77)

OAK RIDGE NATIONAL LABORATORY
OPERATED BY
CARBIDE AND CARBON CHEMICALS DIVISION
UNION CARBIDE AND CARBON CORPORATION
UCC
POST OFFICE BOX P
OAK RIDGE, TENNESSEE

[redacted]

[redacted]

ORNL-794

This document consists of 24 pages. Copy 8 of 124. Series A.

Contract No. W-7405, eng.-26

REACTOR TECHNOLOGY DIVISION

SPECIAL REPORT

MIXING IN THE CORE OF THE HRE

by

J. S. Culver
C. B. Graham
R. H. Wilson

DATE ISSUED

NOV 13 1950

DECLASSIFIED

CLASSIFICATION CHANGED TO:

BY AUTHORITY OF: TID-1148

BY: P. Morrison 7/10/57

OAK RIDGE NATIONAL LABORATORY
Operated by
CARBIDE AND CARBON CHEMICALS DIVISION
Union Carbide and Carbon Corporation
Post Office Box P
Oak Ridge, Tennessee

[redacted]

MARTIN MARIETTA ENERGY SYSTEMS LIBRARIES

3 4456 0360806 8

TABLE OF CONTENTS

MIXING IN THE CORE OF THE HRE

	Page
Abstract	4
Introduction	5
Flow through section "A"	5
Mixing as indicated by the path of gas bubbles	9
Flow through section "B"	9
Maximum temperature if intermixing is ignored in "B"	10
Conclusions	11
ALTERNATE DESIGN	
Soup injection at lower end of vortex	14
Conclusions	14
APPENDIX	
Experimental evidence on mixing in the reactor	15
Dye injection tests	15
Hot water tests	15
Center heat removal considering no intermixing between "A" and "B"	18
Effect of water injection on gas holdup	23
Bibliography	24

[redacted]

[redacted] [redacted]

[redacted]

ABSTRACT

Qualitative experiments indicate that the spiral flow in the outer portion of the core and the mechanical mixing in the center of the core are adequate to prevent boiling in the HRE.

Calculations, which assume no mechanical mixing in the center, show that evaporation below the boiling point in the central region will prevent boiling if provision is made to handle the large volumes of saturated gas evolved.

An alternate design which provides for the injection of cold (210 °C) soup into the bottom of the vortex provides the best insurance against overheating the central region of the core, and reduces the volume of gas to be removed.

[redacted]

MIXING IN THE CORE OF THE HRE

INTRODUCTION

The core of the Homogeneous Reactor Experiment has been described in Report ORNL-730 and consists of an 18" sphere through which 100 GPM of solution is pumped. Liquid is supplied to the sphere through a pipe in a manner so that the liquid rotates about a vertical axis; and is removed through a vertical pipe at the top. Gases collect in a vortex on the axis and are withdrawn through a small pipe at the upper end of the vortex (see Figure 1).

Flow through Section "A" (see Fig. 1)

Looking down on the sphere, as the liquid enters the sphere it assumes a curved path about the axis and spirals in toward the axis (see Fig. 2). Angular velocity increases as it moves in. The liquid spreads out to form a vertical cylinder as it enters, and the cylinder increases in length (bounded by the walls of the sphere) and decreases in diameter as the liquid moves in. The flow pattern is similar to a roll of paper which has been machined to a spherical shape. The bubble path shown in Figure 2 is typical for all planes perpendicular to the axis within the sphere.

Figure 1 shows velocity components in a vertical plane. The initial axial component of velocity produced by the angle of the inlet pipe rapidly disappears leaving the path of fluid particles as shown in Fig. 1. Typical bubble paths, from the inlet, are also shown by the dash lines, and indicate that the liquid flow is as shown. When the cylinder has decreased to the diameter of the outlet pipe, (B), the liquid moves rapidly out in a vertical direction while rotating rapidly about the axis. Thus the sphere is completely and uniformly swept by the flowing liquid until the liquid path reaches the diameter of the outlet.

This flow pattern has been observed in numerous tests using dye or paper wads, and may be deduced from the flow pattern of the bubbles (see photo). It will be even more positive when the liquid is heated as it progresses through the sphere.

In a centrifuge, low density liquids will collect at the inner layer and heavy liquids at the outside. As the reactor liquid heats it becomes less dense and therefore will tend to distribute itself in layers according to temperature with the hottest (least dense) liquid at the center. Since this

DWG. 9797

[redacted]

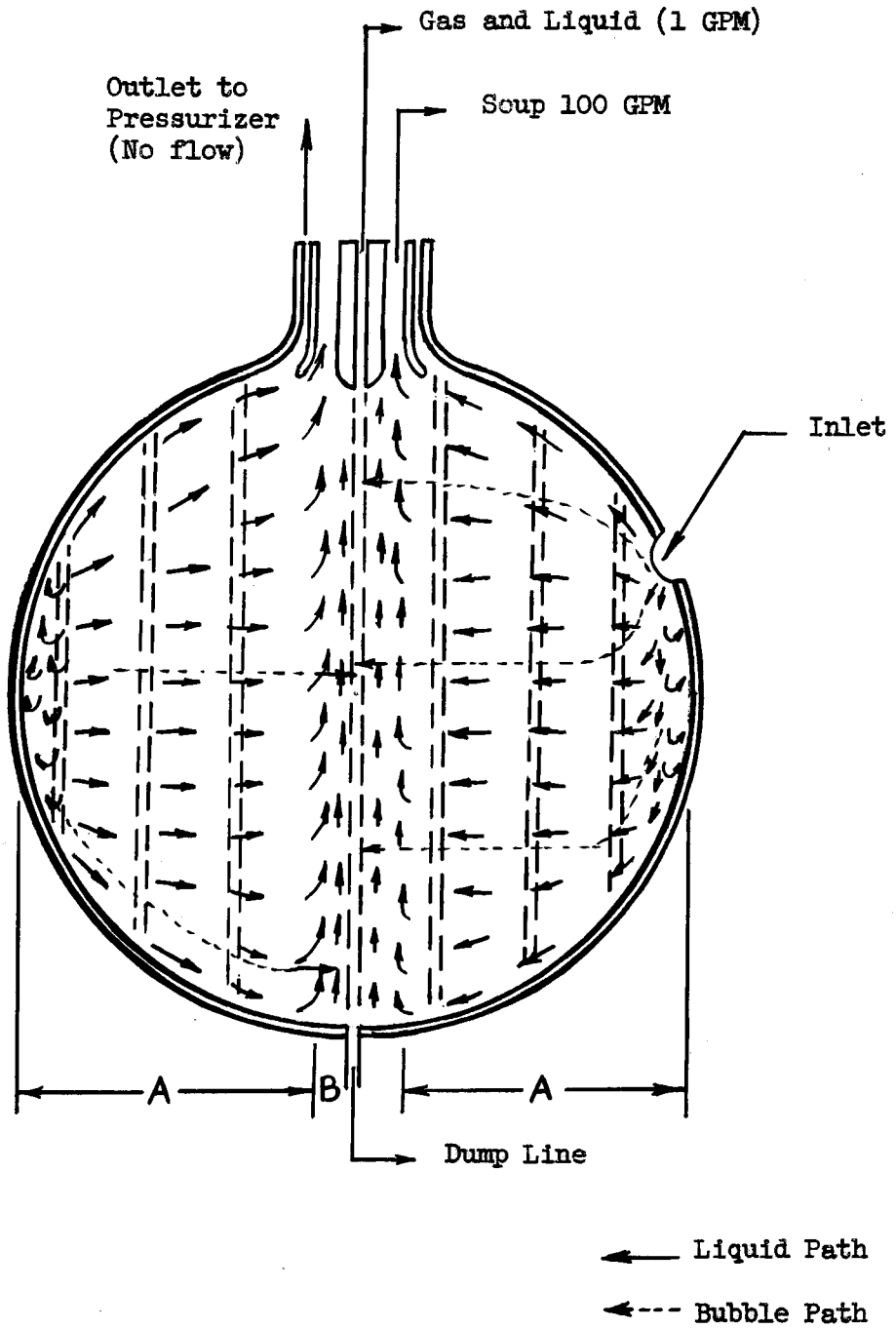

FIGURE 1

SIDE ELEVATION OF SPHERE SHOWING
FLOW COMPONENTS IN A VERTICAL PLANE

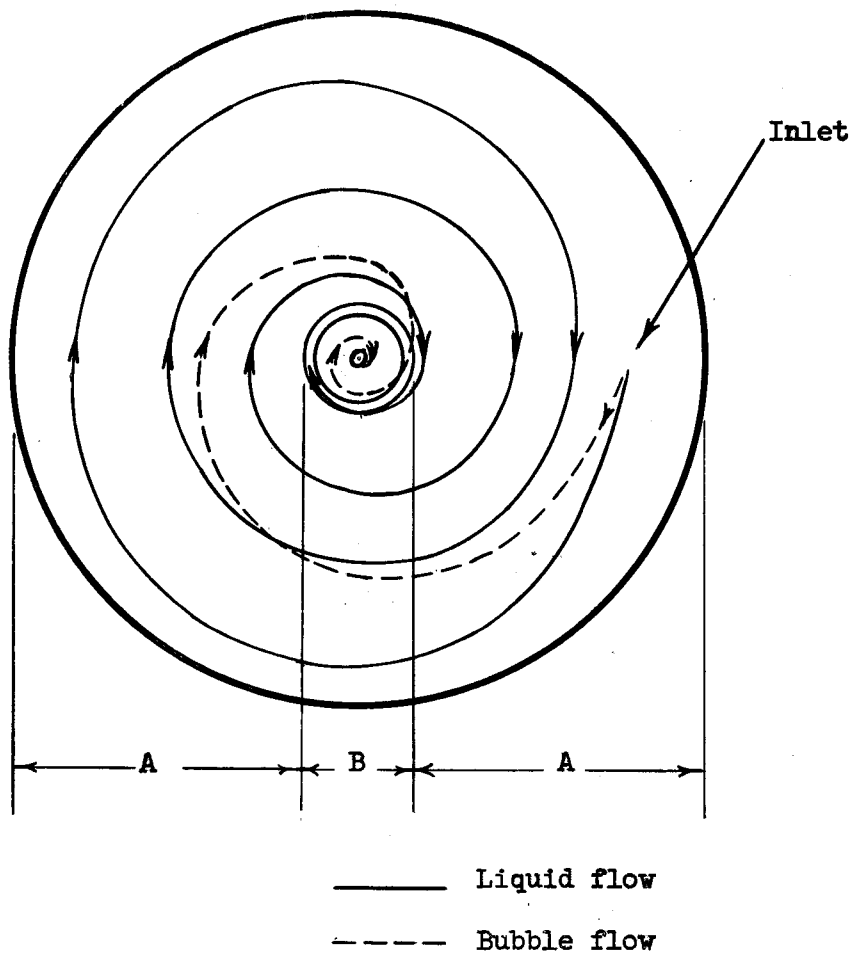

FIGURE 2

PLAN VIEW OF FLOW PATTERN

[redacted]

PHOTO NO. 9900

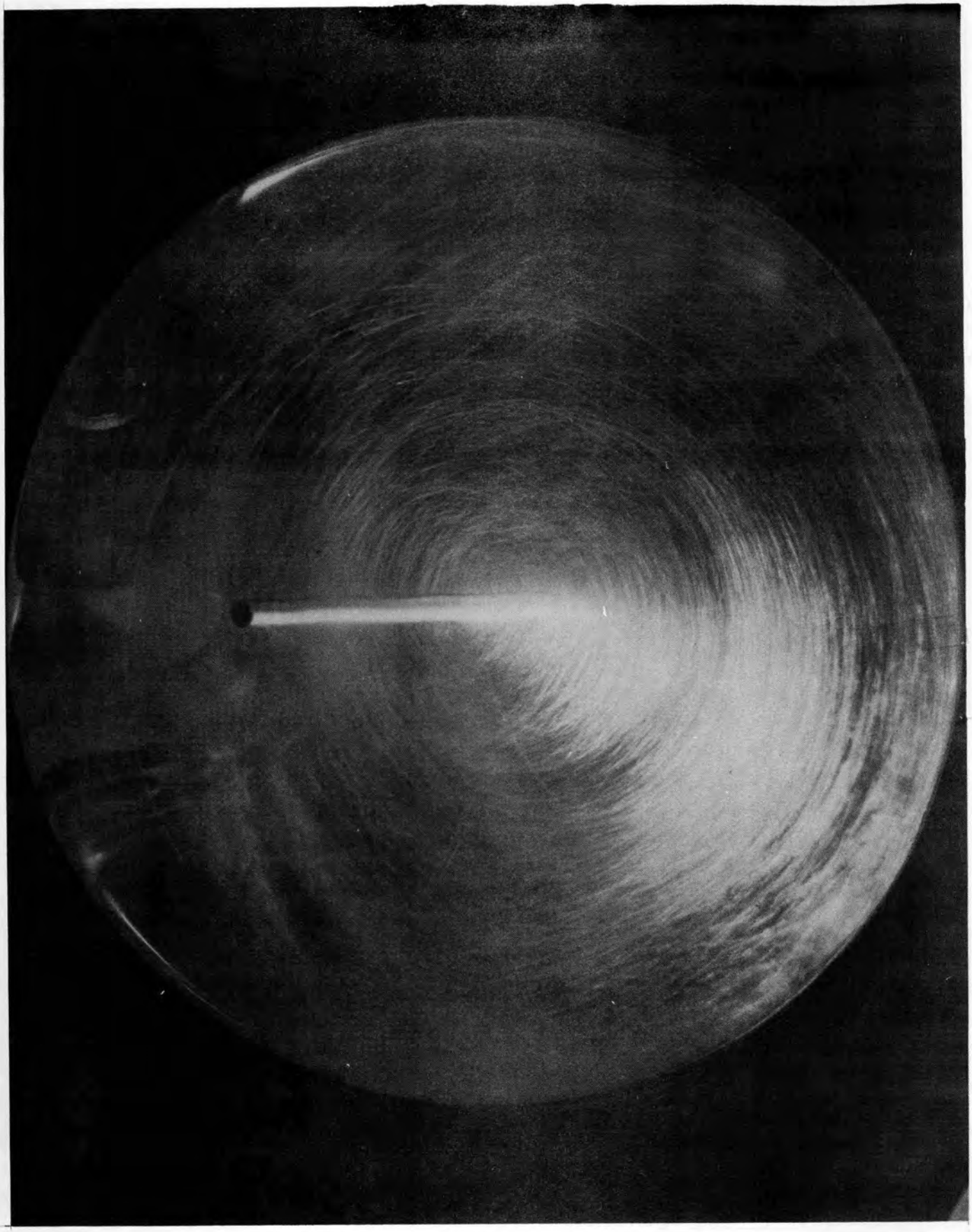

Flow through Section "A" (Cont'd)

is the natural pattern of flow for the cold liquid, heating the liquid as it progresses in will not distrub the pattern. In fact, if a hot spot were to develop, its lowered density (increased buoyancy) will cause it to move in more rapidly and thus decrease its residence time in the reactor.

Mixing is further promoted by the movement of gas bubbles through the core since their radial velocity is approximately 20 times the radial velocity of the liquid. If any local area were overheated to the boiling point, steam bubbles would form and move rapidly into the vortex. It does not appear possible for local heating to go this far but if it did, the heat would be rapidly removed by the steam bubbles which would also agitate the area.

There seem to be no stagnant regions in part "A" of the sphere and, in fact, the situation appears ideal. This same flow pattern is expected at high temperatures, and will be checked in the near future when the installation of experimental equipment has been completed.

Mixing as indicated by the path of gas bubbles

The pattern of liquid flow within the core may be deduced by studying the path of bubbles in the core. A considerable number of studies have been made by visual and photographic means, with the result that the pattern as described in this report has been confirmed.

Tests conducted with many small tubes used to inject air at different positions in the core showed the bubble path from any point to be essentially in a plane parallel to the equator except for a slight effect due to the axial flow.

If however, gas was admitted within the inlet stream, bubbles were distributed to positions all along the axis. The fact that some bubbles arrive at the lower end of the vortex (the most questionable point as far as mixing is concerned), indicates that mixing is assured throughout.

Flow through Section "B" (see Fig. 1)

A more complex phenomenon is present in the region surrounding the vertical axis inside the diameter of the outlet pipe. A purely theoretical picture of this region would consist of a solid bar of liquid with its axis on the vertical axis of the core and rotating at constant angular velocity. A large portion of the core fluid is flowing vertically out along the outer surface of

[redacted]

Flow through Section "B" (Cont'd)

the bar which is somewhat smaller in diameter than the outlet pipe. The bar of liquid is moved vertically by the flow of liquid on its surface and also by the liquid which flows out the gas outlet (1 GPM). See Fig. 1. The rate of this vertical movement is not known, but when dye (Appendix) was injected into the lower end of this "bar" at a radius of 1 inch, all of section "B" quickly became colored, and when the dye was shut off the color was quickly dispersed in a matter of seconds. It made little difference whether the gas outlet was open or closed in the dye experiments in which the dye was admitted at a radius of 1 inch.

At a later date two thermocouples were placed in the sphere, one at the outlet and one at the lower end of section "B". A tank of hot water was connected so that it could be put into the system by a quick-operating valve (Appendix). The results are shown in Fig. 7. It can be seen that no hot water was isolated in section "B" and that in this case there was adequate mixing in the central region. The whole thirty gallon system came to a uniform temperature in 20 seconds. These experiments indicate adequate mixing.

As mentioned before, hot (low density) liquid may tend to collect at the center of the sphere because of the centrifugal action. In an unheated sphere dye will mix throughout the sphere in a matter of approximately 10* seconds. Average transit time in the core is $\frac{13.2 \text{ gal}}{100 \text{ GPM}} \times 60 = 7.92$ secs. There seems to be little question about adequate mixing under these conditions, but the question has been raised as to whether the central column (about the axis) will be adequately cooled when heat is introduced, since the hot liquid may tend to collect at the center of the vortex. If it is not adequately cooled, the temperature might approach the boiling point.

Maximum temperature if intermixing is ignored in "B"

The volume of region "B", see Fig. 1, is $\pi \times 1^2 \times 18'' = 56.5 \text{ in}^3$. The total volume of the sphere is $\frac{4}{3} \pi 9^3 = 3050 \text{ in}^3$. Therefore if the average power density in "B" may be assumed to be the same as the sphere average, the heat to be removed from this volume is:

---

* One complete circuit in the proposed reactor.

[redacted]

Maximum temperature if intermixing is ignored in "B" (Cont'd)

$$1000 \text{ KW} \times \frac{56.5 \text{ in}^3}{3050 \text{ in}^3} = 18.5 \text{ KW}$$

$$18.5 \text{ KW} = 1050 \text{ Btu/min.}$$

The calculations in the Appendix have been made with the pessimistic assumption that no intermixing takes place between sections "A" and "B". Under such conditions, the only heat removed is that taken out by evaporation in "B", by the liquid that goes out with the gas (1 GPM) and by the liquid taken out the bottom of the sphere (1 GPM). In order for heat to be removed by the processes just mentioned, section "B" must operate at a slightly higher temperature than section "A", which is to operate at 250 °C. The possible heat removal at different temperatures ranging from 250 °C to 270°C was calculated for two different water decomposition factors at the power level of 1000 KW. The results are shown in Figure 4. It can be seen from Fig. 4, that the maximum temperature of section "B", for a decomposition factor of 50 ev/ion pair is 262.4 °C., and for 100 ev/ion pair it is 266.4 °C. From Fig. 5 the volumes of gas to be handled under the two conditions are, respectively, 690 cc/sec., and 415 cc/sec.

The cooling by evaporation should be thought of as reserve cooling since the dye experiments and the hot water experiments indicate that the liquid in section "B" does change rapidly. If, however, this should not be the case, section "B" would rise to a temperature about 17° above "A".

Conclusions

1. Adequate mixing and cooling in the core is indicated.

2. An ideal self-adjusting mixing will exist from the equator in as far as the diameter of the outlet pipe. This is indicated by the dye tests, the movement of bubbles through the liquid, and the centrifugal effect upon the least dense regions of the liquid.

3. Slightly inferior mixing may exist in the immediate region of the vortex void, but this seems unlikely. No point of stagnation has been found or appears probable. The center region appears to be adequately mixed, but if it is not, it can not overheat more than 17°C. which is 18°C. below the boiling point for 250 °C. operation at 1000 psia.

[redacted]

DRAWING NO. 9344

[redacted]

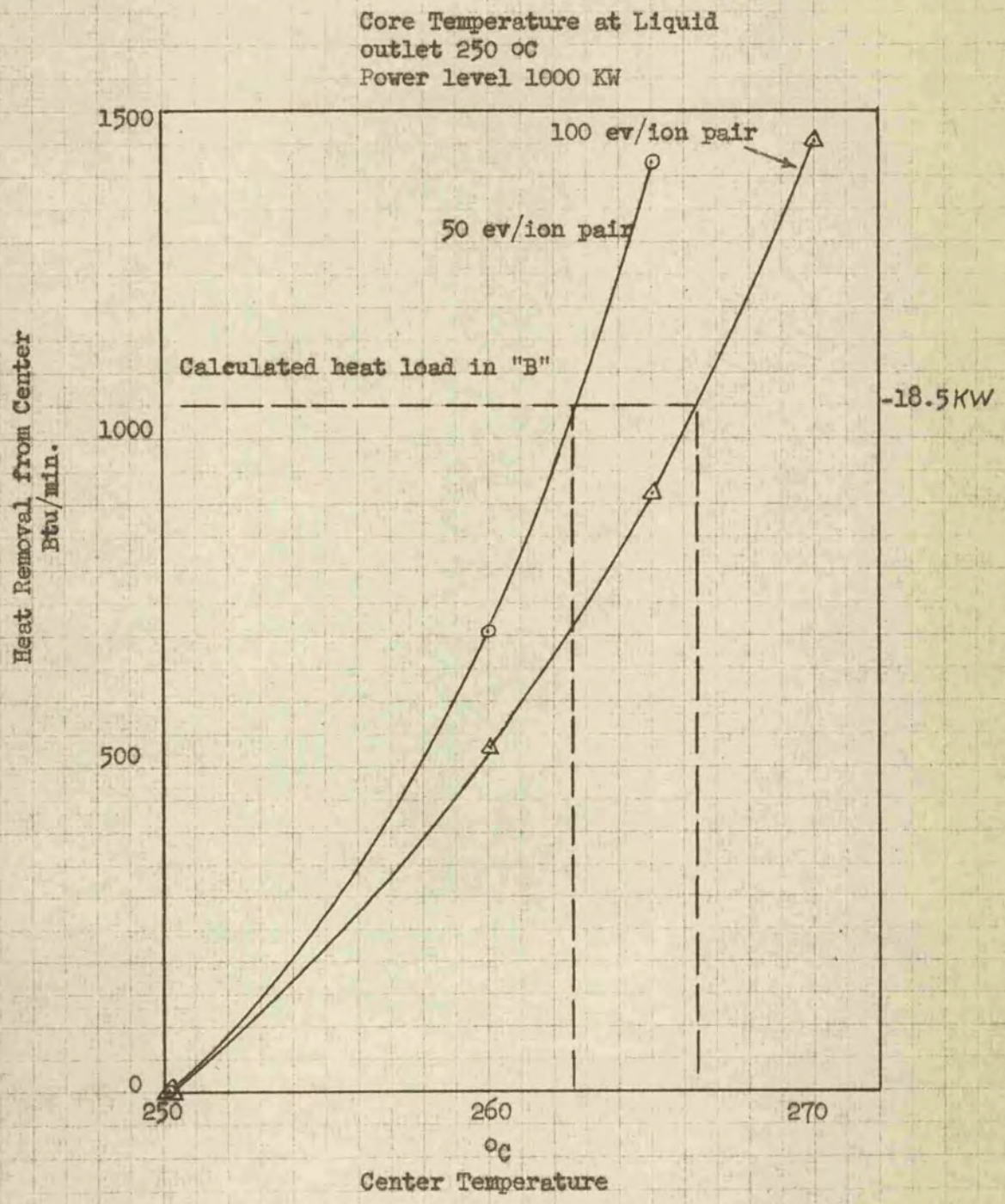

FIGURE 4

HEAT REMOVAL FROM CENTER OF CORE-SECTION "B"

DRAWING NO. 9345

[redacted]

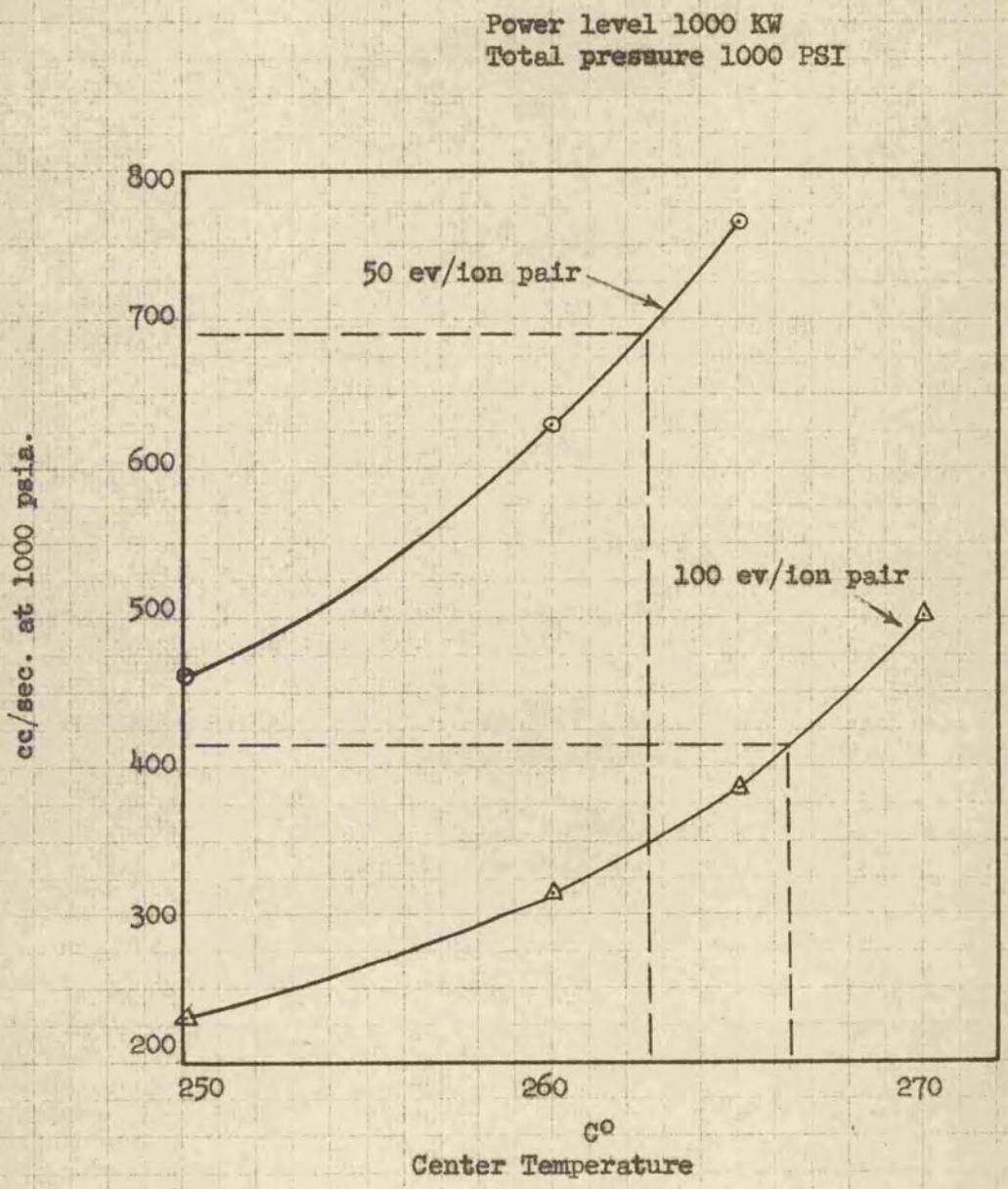

FIGURE 5

SATURATED GAS FLOW FROM CORE

[redacted]

ALTERNATE DESIGN

Soup Injection at Lower End of Vortex

Instead of permitting the "B" region temperature to rise above 250°C, as has been the case in the previous treatment, the temperature of this region may be held to 250°C by the injection of cold (210°C) soup into the bottom of the vortex. The required injection is:

$$\frac{1050 \text{ Btu/min.}^{*}}{40^{\circ}\text{C} \times 1.8 \text{ Btu/lb. }^{\circ}\text{C} \times 6.7 \text{ lb/gal}} = 2.17 \text{ GPM}$$

From the standpoint of mechanical design, the injection of soup into the bottom appears to be as feasible as the withdrawal of soup from the bottom. The advantage is that holding the center temperature to 250°C will minimize the saturated volume of gas to be handled. Experiment (Appendix, Fig. 8) has shown that the injection of 1 - 3.5 GPM water into the lower end of the vortex does not appreciably affect the holdup of gas in the sphere, at any given gas flow (volumetric) flow rate. Since injection reduces the gas volume, by lowering the temperature, its use is recommended.

Conclusions:

1. Injecting cold soup into the lower end of the vortex appears to be preferable to the previous system, since the volume of saturated gas to be removed from the vortex will be reduced.

2. It is recommended that injection into the vortex be tested in the latest apparatus and used in the HRE if no difficulties develop during the testing.

---

* See page 11

[redacted]

[redacted]

APPENDIX

EXPERIMENTAL EVIDENCE ON MIXING IN THE REACTOR

Although no truly quantitative tests have been run on this subject several experiments have been run to ascertain the nature of the flow in the sphere and if there might be any volumes which are not removed in a reasonable time.

Dye Injection Tests

Two coloring agents were used in these tests with essentially the same results. First tests were run with potassium permanganate as the dye and ferrous chloride to clear the solution.

In the first test the dye was admitted at the bottom of the sphere opposite the outlet. When introduced at the center, a narrow column of dye passed rapidly along the axis of rotation and passed out the air outlet with no diffusion evident. When the dye stream was admitted at a radius of about one inch it filled the central 2 1/4 dia. core inside the outlet annulus rapidly and soon pumped out.

When the dye was admitted with the inlet stream a spiral ribbon appeared and the dye rapidly spread along the vertical surface of each turn of the spiral, demonstrating the "cylindrical" type of flow present. Under these conditions the dye diffused completely throughout the system in approximately 10 secs. Addition of the ferrous chloride reversed the process, gradually clearing up the system. The last place to clear up was, surprisingly enough, a "doughnut" about 8 inches in diameter about 4 inches below the outlet. This ring also disappeared in a matter of seconds (estimated at approx. 7 secs.).

Similar experiments were run using a phenopthalein solution in ethyl alcohol in an attempt to see the effect of a low density solution in the system. In a qualitative sense the results were the same as before.

Hot Water Tests

These tests were exploratory in nature to determine whether hot water would stay in the 2 1/4 Dia. core, due to its lower density. Since the plastic spheres cannot be allowed to become too hot the system was run on cold (20°C) water as usual with a 10 gallon tank of hot (150 °F) water which could be quickly inserted in the system, as shown in the accompanying sketch.

[redacted]

[redacted]

Hot Water Tests (Cont'd)

FIGURE 6

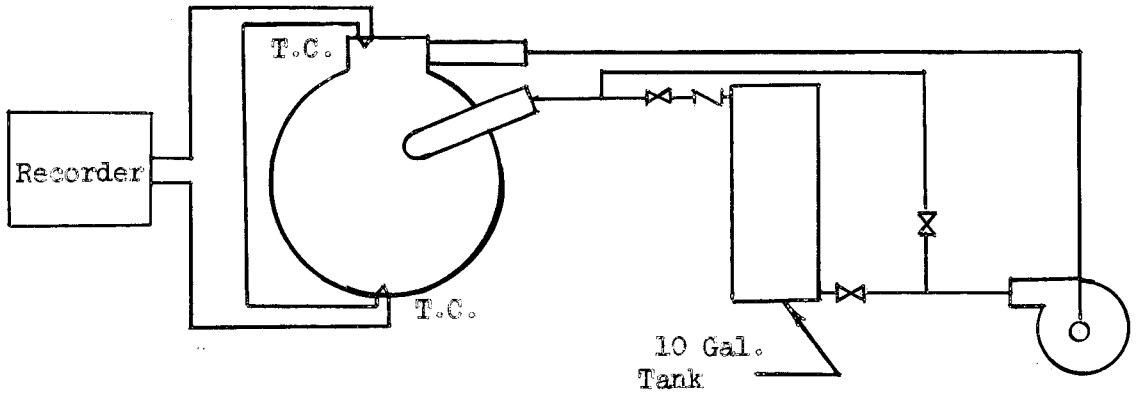

The by pass valve is of the quick opening lever operated gate type and a spring loaded check valve was inserted in the system to prevent flow until the by pass was closed. Total volume of system was about 30 gallons.

Two differentially connected copper-constantan thermocouples were inserted in the water stream as shown, one at the very center of the central core at the bottom opposite the outlet, and the other in the outlet stream.

With the system running on 70 °F water the 10 gallon tank was filled with 150 °F water and after opening the two valves which isolated the tank from the system, the by pass valve was suddenly closed. A typical trace is shown in Figure 7.

To aid in interpreting the curves thus obtained additional runs were made holding one thermocouple at constant temperature. In this manner the behavior of each region was noted independently.

Subtracting these two curves gives a result essentially the same as observed when both thermocouples are run together.

The results of these tests are not at all clear or conclusive when applied to the reactor, but indicate that either considerable mixing does occur or that the hot core is pumped out. Tests run with no flow thru the gas outlet showed the same behavior.

[redacted]

DRAWING NO. 9343 [redacted]

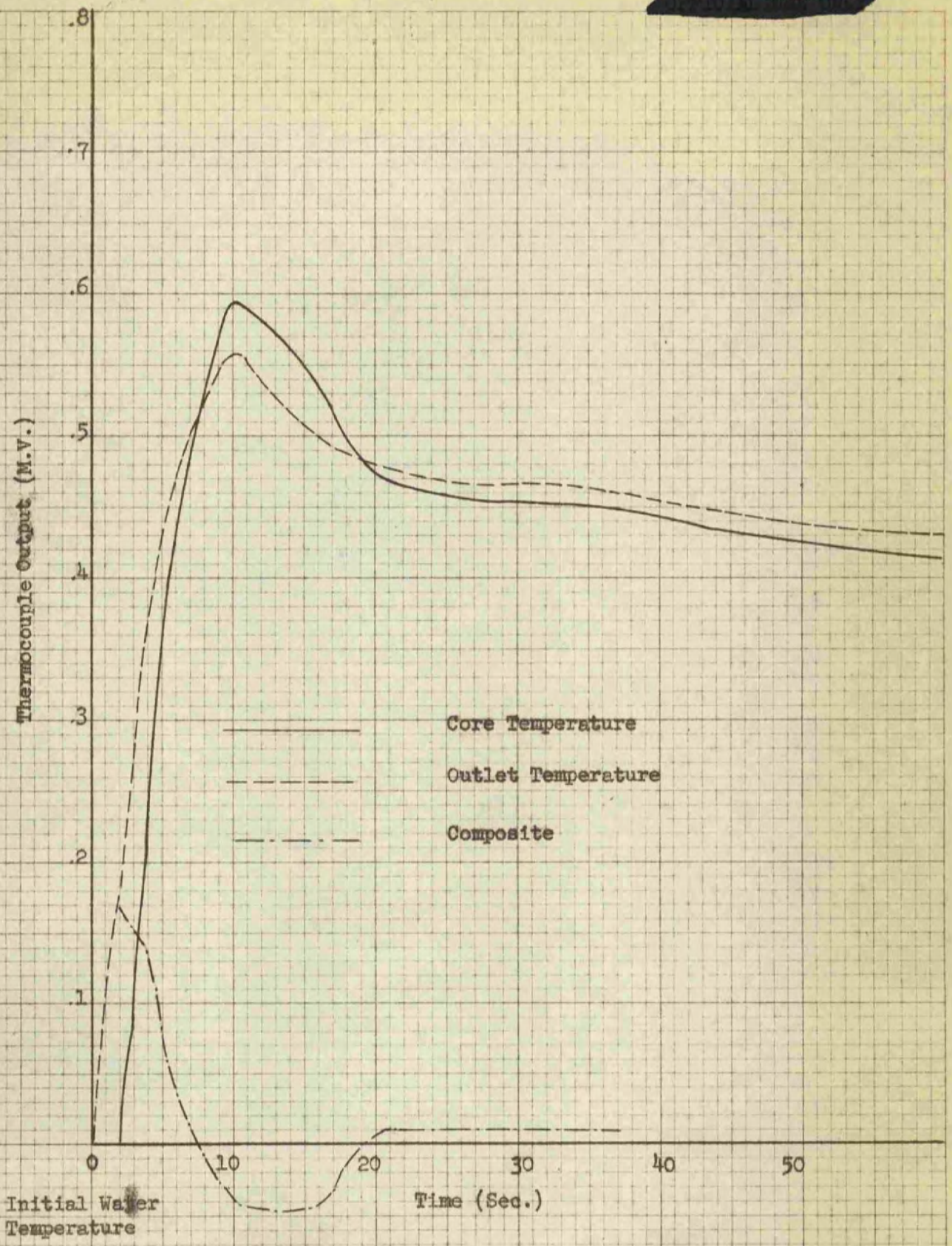

FIGURE - 7

EFFECT OF MIXING ON CORE TEMPERATURE

EUGENE DIETZGEN CO. MADE IN U.S.A.
NO. 340R-10 DIETZGEN GRAPH PAPER 10 X 10 PER INCH

Center Heat Removal Considering No Intermixing Between "A" and "B"

Gram-mols. gas evolved at 1000 KW = 0.31 g-mols/sec.

(based on 50 ev/ion pair).

Apparent molecular weight of gas = 12 g/g-mol.

At 250 °C

V.P. H_2O = 577 psia.

P.P. gas = 423 psia.

$$\frac{\text{Volume steam}}{\text{Volume gas}} = 1$$

Specific volume of dry gas at 250 °C., 423 psia =

$$\frac{22.4}{12} \times \frac{523}{273} \times \frac{14.7}{423} = 0.124 \text{ liters/g.}$$

Specific volume of steam = 0.802 ft.^{3}/lb. at 250°C., 577 psia*

$$\frac{0.802 \times 28.3}{454} = 0.050 \text{ liters/gram.}$$

Humidity of gas = $$1 \times \frac{\frac{1}{0.050}}{\frac{1}{0.124}} = \frac{0.124}{0.050} = 2.48 \text{ g.}H_2O\text{/g. dry gas}$$

Humid volume of gas at 250 °C., 1000 psia. =0.124 liters/gm. dry gas.

Gassing rate = 0.31 (0.124 x 12)1000 = 461 cc/sec.

At 260 °C

V. P. H_2O = 681 psia.

P. P. gas = 319 psia.

Volume gas = Vol. steam

Specific volume of dry gas at 260 °C., 319 psia =

$$\frac{22.4}{12} \times \frac{533}{273} \times \frac{14.7}{319} = 0.169 \text{ liters/g.}$$

---

* Keenan and Keyes

Center Heat Removal Considering No Intermixing Between "A" and "B" (Cont'd)

At 260 °C (Cont'd)

Specific volume of steam at 260 °C., 681 psia. =

$$\frac{0.675\ ft^3/lb. \times 28.3}{454} = 0.0421\ liters/g.$$

Humidity of gas = $\frac{0.169}{.0421}$ = 4.01 g/H_2O /g. dry gas.

Humid volume of gas at 260 °C., 1000 psia. = 0.169 liters/g. dry gas.

Gassing rate = 0.31(0.169 x 12)1000 = 629 cc/sec.

Increase in humidity = 4.01 - 2.48 = 1.53 g. H_2O/g. dry gas.

Neglect heat taken up by dry gas.

Water vaporized = $\frac{0.31 \times 12 \times 1.53 \times 60}{454}$ = 0.752 lb./min.

Enthalpy water at 250 °C = 469 Btu/lb.

" steam at 260 °C = 1202 Btu/lb.

" water at 260 °C = 488 Btu/lb.

Heat removed by vaporizing = 0.752(1202-469) = 551 Btu/min.

Heat removed by liquid = 2 gal/min. x 6.68 lb./gal(488-469) Btu/lb.

= 254 Btu/min.

Heat removed = 805 Btu/min.

Required removal = 1050 Btu/min.

At 265 °C

V. P. water = 738 psia.

P. P. gas = 262 psia.

Vol. gas = Vol. steam

Specific volume of dry gas at 265 °C., 262 psia =

$$\frac{22.4}{12} \times \frac{538}{273} \times \frac{14.7}{262} = 0.206\ liters/g.$$

At 265 °C (cont'd)

Specific volume steam at 265 °C., 738 psia = 0.620 ft.^{3}/lb.

$$\frac{0.620 \times 28.3}{454} = 0.0387 \text{ liters/g.}$$

Humidity of gas = $\frac{0.206}{0.0387}$ = 5.32 H_2O/g. dry gas

Humid volume of gas = 0.206 liters/g. dry gas at 265°C., 1000 psia.

Gassing rate = 0.31(0.206 x 12)1000 = 766 cc/sec.

Increase in humidity = 5.32 - 2.48 = 2.84 g. H_2O/g. dry gas

Water vaporized = $\frac{0.31 \times 12 \times 2.84 \times 60}{454}$ = 1.40 lb./min.

Enthalpy steam at 265 °C., 738 psia = 1200 Btu/lb.

" water at 265 °C., 738 psia = 499 Btu/lb.

Heat removed by evaporation = 1.4(1200 - 469) = 1020 Btu/min.

Heat removed by liquid = 2 x 6.68 (499 - 469) = 402 Btu/min.

Heat removed = 1422 Btu/min.
Required removal = 1050 Btu/min.

Gram-mols gas evolved at 1000 KW is 0.155 g-mols/sec.

(based on 100 ev/ion pair)

Apparent molecular weight of gas = 12

At 270 °C

V. P. H_2O = 798 psia.

P. P. gas = 202 psia.

Specific volume dry gas at 270 °C, 202 psia. =

$$\frac{22.4}{12} \times \frac{543}{273} \times \frac{14.7}{202} = 0.270 \text{ liters/g.}$$

At 270 °C (Cont'd)

Specific volume steam at 270 °C., 798 psia = 0.570 ft.^{3}/lb.

$$\frac{0.570 \times 28.3}{454} = 0.0355 \text{ l/g.}$$

Humidity of gas = $\frac{0.270}{0.0355}$ = 7.6 g. H_2O/g, dry gas

Humid volume of gas at 270 °C., 1000 psia = 0.270 l/g. dry gas

Gassing rate = 0.155(0.270 x 12) x 1000 = 502 cc/sec.

Humidity change = 7.60 - 2.48 = 5.12 g H_2O/g. dry gas

Water vaporized = $\frac{0.155 \times 12 \times 5.12 \times 60}{454}$ = 1.26 lb./min.

Enthalpy steam at 270 °C., 798 psia = 1198 Btu/lb.

" water at 270 °C., 798 psia = 509 Btu/lb.

Heat removed by evaporation = 1.26(1198-469) = 918 Btu/min.

Heat removed by liquid = 2 x 6.68(509-469) = 534

Total heat removed = 1452 Btu/min.

Required removal = 1050 Btu/min.

At 265 °C., and 270 °C., the cooling due to evaporation will be half that for the case of 50 ev/ion pair. The cooling by the liquid will be the same. The results are shown in the table and on Figure 4.

HEAT REMOVAL FROM CENTER OF CORE
Core Temperature 250 °C. At Liquid Outlet

Center	50 ev/ion pair		100 ev/ion pair	
Temp.°C	Btu/min	cc/second	Btu/min.	cc/second
250	0	461	0	230
260	705	629	530	315
265	1422	766	912	383
270	-	-	1452	502

Power Level 1000 KW.

DRAWING NO. 9347 [redacted]

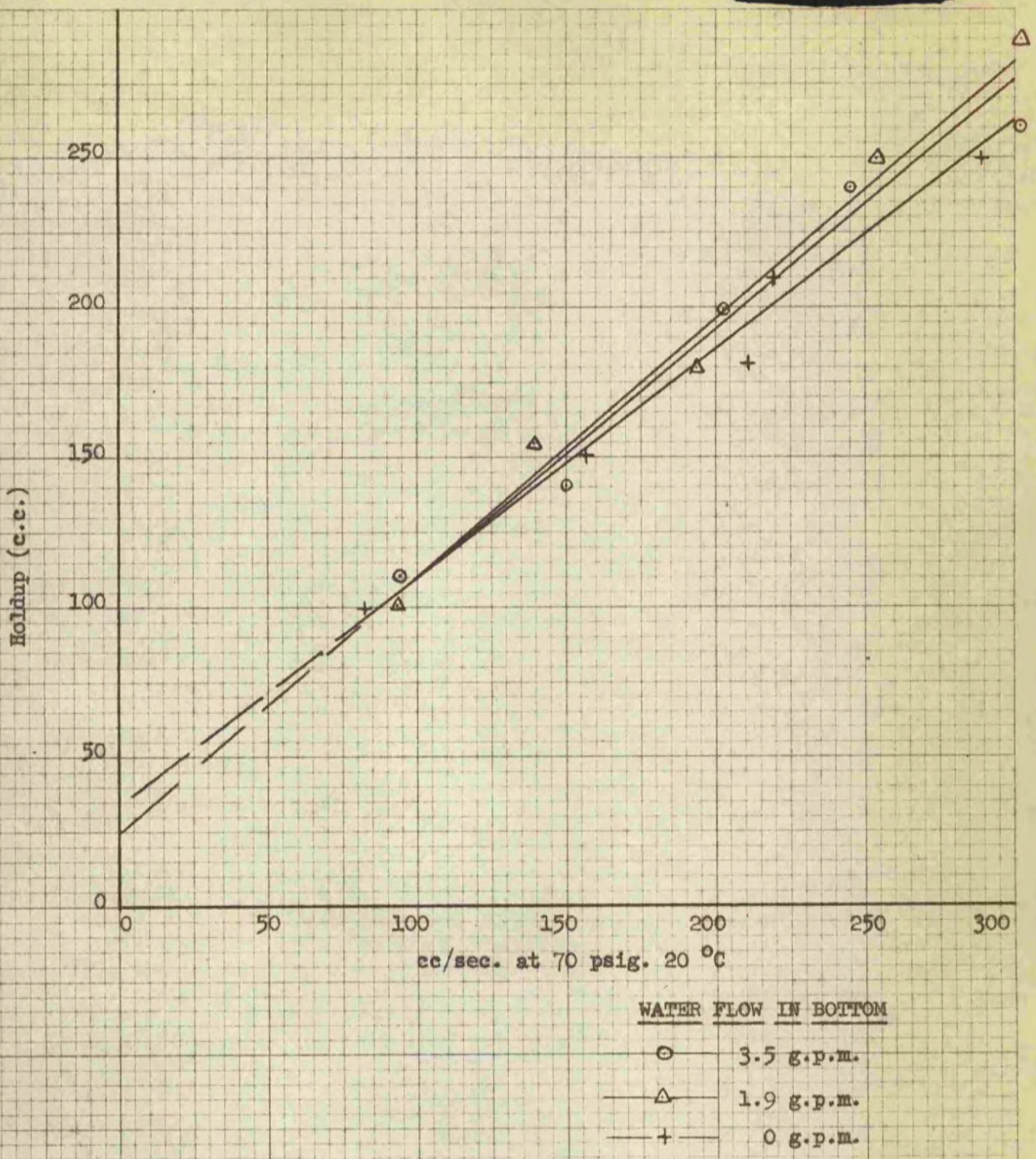

FIGURE 8

GAS FLOW VS GAS HOLDUP IN STEEL SPHERE
FOR DIFFERENT
BOTTOM INJECTION RATES

NOTE: This data includes holdup in the external system of the test apparatus. Actual holdup in the core may be reduced by an unknown amount.

EUGENE DIETZGEN CO. MADE IN U.S.A.
NO. 340R-10 DIETZGEN GRAPH PAPER 10 X 10 PER INCH

[redacted]

Effect of Water Injection on Gas Holdup

The effect of injecting cold soup into the bottom of the vortex upon the gas holdup is of interest because it is desired to insure the cooling of the center of the reactor core by this method. The experimental evidence obtained to date indicates that this injection has little or no effect upon the gas holdup, for a given volume of gas flow.

Three series of holdup measurements were made with different rates of water flow into the bottom of the steel sphere. The result is shown in Figure 8. The scattering of points could be represented by a single line about as well as by the three shown.

[redacted]

BIBLIOGRAPHY

ORNL - 730

Keenan and Keys, Thermodynamic Properties of Steam, John Wiley and Sons, New York, 1946.

McAdams, Heat Transmission, McGraw-Hill, 1942