UNCLASSIFIED

MARTIN MARIETTA ENERGY SYSTEMS LIBRARIES
3 4456 0049260 6

ORNL -924, Series A
INSTRUMENTATION
PROGRESS REPORT
9a

INSTRUMENT RESEARCH AND DEVELOPMENT QUARTERLY PROGRESS REPORT FOR PERIOD ENDING OCTOBER 31,1950

CENTRAL RESEARCH LIBRARY
DOCUMENT COLLECTION
LIBRARY LOAN COPY
DO NOT TRANSFER TO ANOTHER PERSON
If you wish someone else to see this document, send in name with document and the library will arrange a loan.

OAK RIDGE NATIONAL LABORATORY
OPERATED BY
CARBIDE AND CARBON CHEMICALS DIVISION
UNION CARBIDE AND CARBON CORPORATION
UCC
POST OFFICE BOX P
OAK RIDGE, TENNESSEE

UNCLASSIFIED

UNCLASSIFIED

ORNL-924
This documents consists of 56 pages.
Copy 9 of 207. Series A

Contract No. W-7405, eng 26

INSTRUMENT RESEARCH AND DEVELOPMENT

QUARTERLY PROGRESS REPORT

for Period Ending October 31, 1950

Compiled by

W. E. Thompson

DATE ISSUED: MAR 15 1951

OAK RIDGE NATIONAL LABORATORY
operated by
CARBIDE AND CARBON CHEMICALS DIVISION
Union Carbide and Carbon Corporation
Post Office Box P
Oak Ridge, Tennessee

UNCLASSIFIED

MARTIN MARIETTA ENERGY SYSTEMS LIBRARIES

3 4456 0049260 6

ORNL 924
Instrumentation
Progress Report

INTERNAL DISTRIBUTION

1. G. T. Felbeck (C&CCD)
2-3. Chemistry Library
4. Physics Library
5. Biology Library
6. Health Physics Library
7. Metallurgy Library
8-9. Training School Library
10-13. Central Files
14. C. E. Center
15. C. E. Larson
16. W. D. Lavers (Y-12)
17. W. D. Humes (K-25)
18. A. M. Weinberg
19. J. A. Swartout
20. E. D. Shipley
21. E. J. Murphy
22. F. C. VonderLage
23. C. S. Harrill
24. A. H. Snell
25. A. Hollaender
26. F. L. Steahly
27. K. Z. Morgan
28. D. W. Cardwell
29. M. T. Kelley
30. W. H. Pennington
31. J. S. Felton
32. W. J. Ladniak
33. P. R. Bell
34. C. J. Borkowski
35. L. M. Reynolds
36. W. M. Hurst
37. W. H. Jordan
38. R. S. Livingston
39. E. E. Fairstein
40. J. W. Morfitt
41. C. W. Sheppard
42. W. G. Stone
43. F. Western
44. C. P. Keim
45. G. H. Clewett
46. C. D. Susano
47. M. J. Skinner
48-49. Central Files (O.P.)

EXTERNAL DISTRIBUTION

50-57. Argonne National Laboratory
58. Armed Forces Special Weapons Project
59-61. Atomic Energy Commission, Washington
62. Battelle Memorial Institute
63. Brush Beryllium Company
64-67. Brookhaven National Laboratory
68. Bureau of Medicine and Surgery
69. Bureau of Ships
70-73. Carbide and Carbon Chemicals Division (K-25 Plant)
74. Columbia University (J. R. Dunning)
75. Columbia University (G. Failla)
76. Dow Chemical Company
77-81. E. I. duPont de Nemours and Company
82-87. General Electric, Richland
88-91. Idaho Operations Office
92-93. Iowa State College
94. Kansas City Operations Branch
95. Kellex Corporation
96. Kirtland Air Force Base
97-100. Knolls Atomic Power Laboratory
101-103. Los Alamos Scientific Laboratory
104. Mallinckrodt Chemicals Works
105. Massachusetts Institute of Technology (A. Gaudin)
106. Massachusetts Institute of Technology (A. R. Kaufmann)
107-109. Mound Laboratory
110. National Advisory Committee for Aeronautics
111. National Bureau of Standards
112. Naval Medical Research Institute
113-114. Naval Radiological Defense Laboratory
115. New Brunswick Laboratory

EXTERNAL DISTRIBUTION (Cont'd)

116-118. New York Operations Office
119-120. North American Aviation, Inc.
121-124. Carbide and Carbon Chemicals Division (Y-12)
125. Patent Branch, Washington
126. Rand Corporation
127. Sandia Corporation
128. Santa Fe Operations Office
129-143. Technical Information Service, Oak Ridge
144-145. USAF, NEPA Office
146-147. U. S. Geological Survey (T. B. Nolan)
148-149. U. S. Public Health Service
150. University of California at Los Angeles
151-153. University of California Radiation Laboratory
154-155. University of Rochester
156. University of Washington
157. Savannah River Operations Office (Wilmington)
158. Western Reserve University
159-162. Westinghouse Electric Corporation
163-166. Atomic Energy Project, Chalk River
167. Chief of Naval Research
168. H. K. Ferguson Company
169. Harshaw Chemical Corporation
170. Isotopes Division (Mr. McCormick)
171-172. Library of Congress, Acquisition Department (J. W. Cormn)
173. National Bureau of Standards (Library)
174. National Research Council, Ottawa
175. Naval Research Laboratory
176. Nevis Cyclotron Laboratories
177. Nucleonics
178-179. Oak Ridge Institute of Nuclear Studies
180-189. United Kingdom Scientific Mission (M. Greenhill)
190. USAF, Air Surgeon (Col. A. P. Gagge)
191. USAF, Eglin Air Force Base (Technical Library)
192. USAF, Wright-Patterson Air Force Base (Rodney Nudenberg)
193-197. USAF, Wright-Patterson Air Force Base (CADO)
198. U. S. Army, Army Field Forces (Captain James Kerr)
199. U. S. Army, Army Medical Service Graduate School (Col. W. S. Stone)
200. U. S. Army, Atomic Energy Branch (Lt. Col. A. W. Betts)
201. U. S. Army, Director of Operations Research (Dr. Ellis Johnson)
202-203. U. S. Army, Office of Chief Signal Officer (Curtis T. Clayton thru Major George C. Hunt)
204-206. U. S. Army, Technical Command (Col. J. H. Rothschild Attn: Technical Library)
207. UT-AEC Agricultural Research Program (Charles S. Hobbs)

TABLE OF CONTENTS

1. CHEMISTRY DIVISION 7

A Gamma Scintillation Survey Meter 7
Pulse Analysis Using Photographic Density Measurements 9
Instrumentation for Neutron Diffraction 14
A Reliable Count-rate Meter 21
A High-stability Low-drain Portable High-voltage Supply 24

2. HEALTH PHYSICS DIVISION 29

Instrumentation and Techniques for Waste Disposal Studies 29
Constant Water Monitor 30
Radiofrequency High-voltage Supply 30

3. INSTRUMENT DEPARTMENT 31

Vacuum Systems and Components 31
Ion-optics 31
Additions to the Accelerator Building 32
Radiofrequency Ion Source 32
Telemetering for 2-Mev Van de Graaff 34
Accelerator-tube Design Studies 36
Neutron Dosimeter Counters 37
X-ray Counter 37
Plastic-end Geiger Counter 38
Electrometers 38
Vacuum-coating Unit 39
Radiation Detection Engineering 39
Automatic Decay Counter 39
Nuclear Plate Camera 39
Coincidence-anticoincidence Counter 40
Liquid-level Telemeter 40
Neutron Time-of-flight Spectrometer, 84-channel Scaling Unit 42
Induction Flow Meter 43

3. INSTRUMENT DEPARTMENT (Cont'd)

Temperature-control Panel for Crystal-growing Apparatus 43
Creep Test Laboratory Instrumentation 44
Two-variable Recorder-alarm System 45
Remote Chamber Monitors 45
Instrument Construction and Maintenance 46
Resonance Analyzer 47

4. PHYSICS DIVISION 48

Split-crystal Scintillation Spectrometer 48
Total-absorption Spectrometer 48
Single-channel Analyzer 51

LIST OF FIGURES

Fig. 1.1	Portable Gammas Scintillation Counter	8
Fig. 1.2	Deflection on Film vs. Input Voltage to Preamp	11
Fig. 1.3	Opacity of Film vs. Number of Pulses Applied	12
Fig. 1.4	Energy Spectra of Two Radioactive Samples	15
Fig. 1.5	Energy Spectrum of La^{138} Source with Background Subtracted	16
Fig. 1.6	Instrumentation for Neutron Diffraction	18
Fig. 1.7	Neutron Diffraction Pattern, Powdered Nickel	20
Fig. 1.8	Linear Count Rate Meter	22
Fig. 1.9	Regulated Battery-operated High-voltage Supply	25
Fig. 3.1	Radiofrequency Ion Source	33
Fig. 3.2	Base Details—Radiofrequency Ion Source	35
Fig. 3.3	Liquid-level Telemeter	41
Fig. 4.1	P^{32} β Spectrum, Split-crystal Spectrometer	49
Fig. 4.2	Kurie Plot Of P^{32}; Split-anthracene-crystal Spectrometer	50
Fig. 4.3	Cs^{137} Gamma Ray as Measured with Total Absorption Spectrometer	52
Fig. 4.4	Co^{60} Gamma Ray as Measured with Total Absorption Spectrometer	53
Fig. 4.5	Single-channel Analyzer—Preliminary	54

1. CHEMISTRY DIVISION

A GAMMA SCINTILLATION SURVEY METER

R. A. Dandl and C. J. Borkowski

The circuit of Fig. 1.1 shows a scintillation survey meter designed for maximum gamma sensitivity. The three features of interest are the amplifier trigger, the high-voltage supply, and the d-c connection of the photomultiplier for measurement of intense sources.

The amplifier features good stability over the life of the tubes and batteries, constant pulse shape, and good overload characteristics. Stabilization is accomplished by means of d-c plate-to-grid feedback of each stage. This type of feedback makes the amplifier relatively insensitive to tube and battery voltage changes. The diode-coupled trigger pair is sensitive and stable and has a relatively constant wave shape. The overload characteristics are a result of the three-stage configuration. The positive pulse out of the second differentiation network on the grid of the second stage is grid-current limited, which works very satisfactorily when the grid is fed by a sufficiently small coupling condenser. There are two back-kick clippers functioning also as diode restorers, which, in conjunction with the trigger configuration, satisfactorily prevent multiple pulsing. The amplifier rise time is of the order of 1.5 μsec and a 1.5-mv pulse is required for triggering.

Since a negative high-voltage supply is used, it is a simple matter to provide a switching arrangement which connects the anode to the vacuum-tube voltmeter, allowing d-c measurement of intense sources. The high-voltage supply is very stable and is a modified version of the supply described on p. 24.

It should be mentioned that the amplifier trigger arrangement with 1.5 mv sensitivity has given some very flat plateaus from Geiger counters and beta proportional counters, in which the maximum-size pulse was of the order of several volts.

Performance characteristics, such as overall stability, battery life, and sensitivity, will be discussed in a subsequent report.

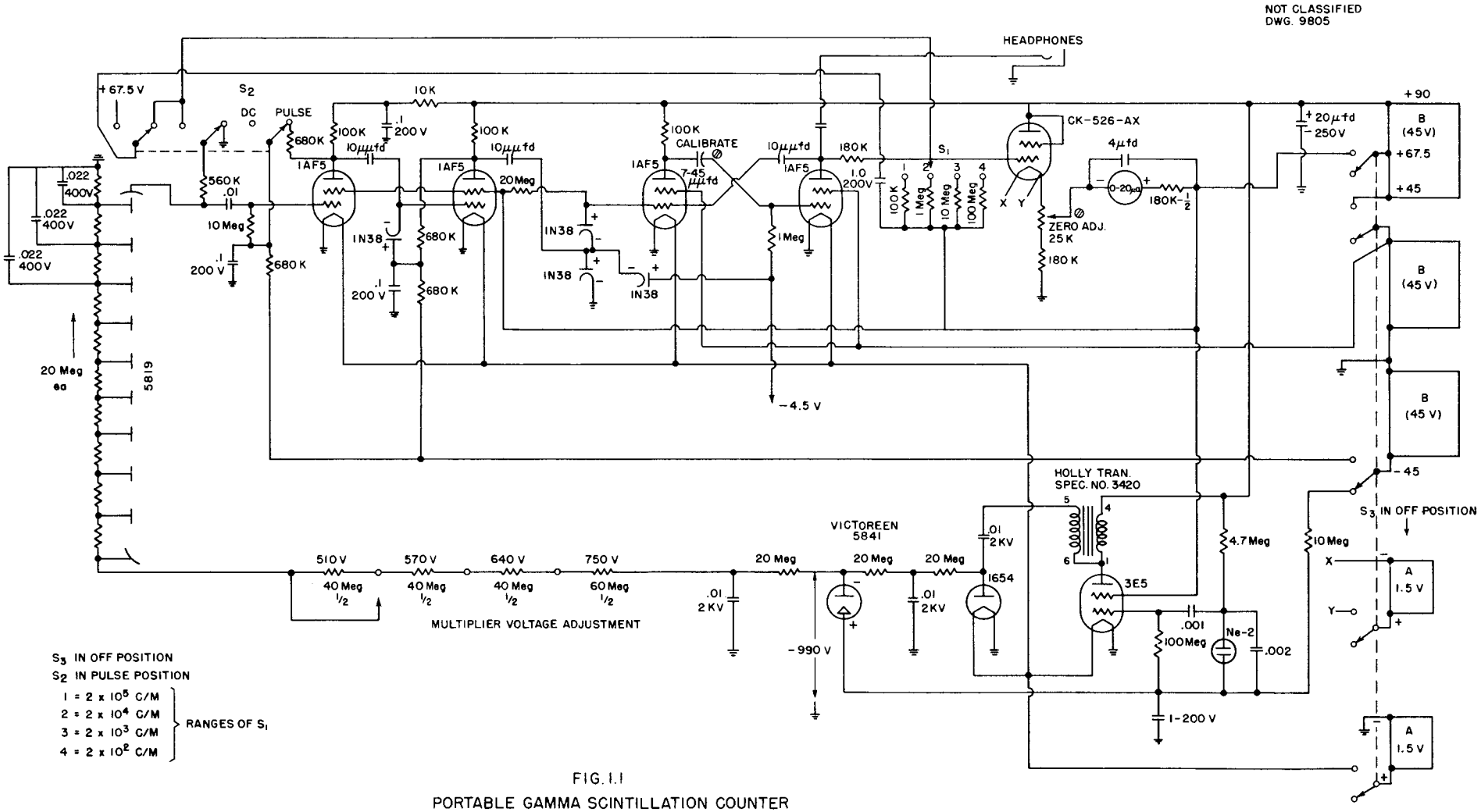

FIG. 1.1
PORTABLE GAMMA SCINTILLATION COUNTER

PULSE ANALYSIS USING PHOTOGRAPHIC DENSITY MEASUREMENTS

R. S. Stone and C. J. Borkowski

Work is underway on methods of pulse-height recording with a view to the development of improved methods. As a first step, existing techniques are being examined. Experiments with a moving-film photographic method in which each pulse is recorded separately were reported in ORNL-795; experiments with a stationary film and densitometer are reported here. The latter method has already been used with short exposures for short half-life activities,[1] but it was apparent that its general use (including long exposures) would introduce different problems, such as fogging, and would have to be evaluated by experiment.

The same setup was used in this as in the moving-film work. The pulses from a proportional counter were fed through an A-1 preamplifier into an A-1 amplifier and thence to a DuMont 248 oscilloscope. This was used with a 5-μsec sweep and ample horizontal gain in order to stretch out the pulse and give as flat a top as possible. A differentiating-circuit, 220-$\mu\mu$f mica-capacitor 500,000-ohm tapered potentiometer, was inserted at the input to the oscilloscope synchronizing circuit (at the grid of V106B) in order to help eliminate multiple pulsing. An intensity setting of 50 in the 4-kv position was found to offer about the best compromise between intensities so high as to give the whole tube face a film-fogging glow, and intensities so low as to require exposures long enough to permit general room-light leakage and filament glow to begin to fog the film. A 5JP11A tube was used for its highly photoactinic phosphor, and Eastman Linagraph Ortho film was used for its high speed and low red sensitivity, which helps eliminate recording of the reddish light from the oscilloscope tube filament. The film was developed in Microdol in order to get the better resolution and long tone scale that are characteristic of a soft-working developer. The Fairchild Oscillo-Record Camera was used without the moving-film feature and with the lens stop varied from f1.5 to f2.8, depending upon the number of pulses to be recorded.

(1) Kahn, J. H., and Goodrich, M., personal communication.

It was desired, first, to check the deflection linearity of the system. In this step, the input to the preamplifier went through the A-1 and oscilloscope amplifiers to the tube face, where it was photographed, and the developed film was motor-driven through the densitometer at a constant rate, in the direction corresponding to the oscilloscope Y axis. The output from the densitometer was fed to a Brown strip-chart recorder; voltage levels in the input were thus represented by displacements along the time axis of the recorder chart. The Constant-Q pulse generator was used as an accurately variable voltage pulse source, and exposures were made with its output connected to the preamplifier in the system described above. Base lines were obtained by a method used by Kahn and Goodrich of the Physics Division, in which the deflection plate connections are shorted to ground, the selector switch is shifted from "amplifier" to "terminals," and a short exposure is made. Typical examples of data obtained in this way are shown in Fig. 1.2. It may be seen that response of the system to voltage changes is quite linear, and with one calibration point energy can be read as a linear function of distance along the time axis of the chart with very little error.

The next question concerns the relation between density and exposure. Theoretically, within the limits of correct exposure, there should be a linear relation between density and logarithm of exposure. How closely this ideal is approached is determined in the following manner: The exposures given at the various voltages in the previous deflection measurement are varied with the speed of the camera shutter in order to give the different lines densities due to exposures of 1/10, 1/5, 1/2, 1 sec, etc. Exposure can be related to the number of pulses "contained" in each line, i.e., 1/5 sec should give about twelve pulses from the 60-cps generator. The quantity recorded by the Brown recorder is really density, D, but since logarithmic chart paper is used, the quantity actually read is opacity, O. ($D = \log O$). When this is replotted on log paper, displacement is again proportional to density, and on log-log paper a graph of opacity vs. number of pulses should give a linear relation. In Fig. 1.3 are three typical graphs, from which it is seen that the linearity here is not nearly so good as in the deflection-vs.-voltage relation. However, several points may lie considerably nearer the lines than shown. For example, in curve b_1 the 1/25-sec exposure has been taken to represent two pulses (statistically the more probable number), although 1/25 sec could also yield three pulses. Taking the number as 3 puts the point very close to the general trend of the other points. The curves drawn give the relations

NOT CLASSIFIED
DWG. 9783

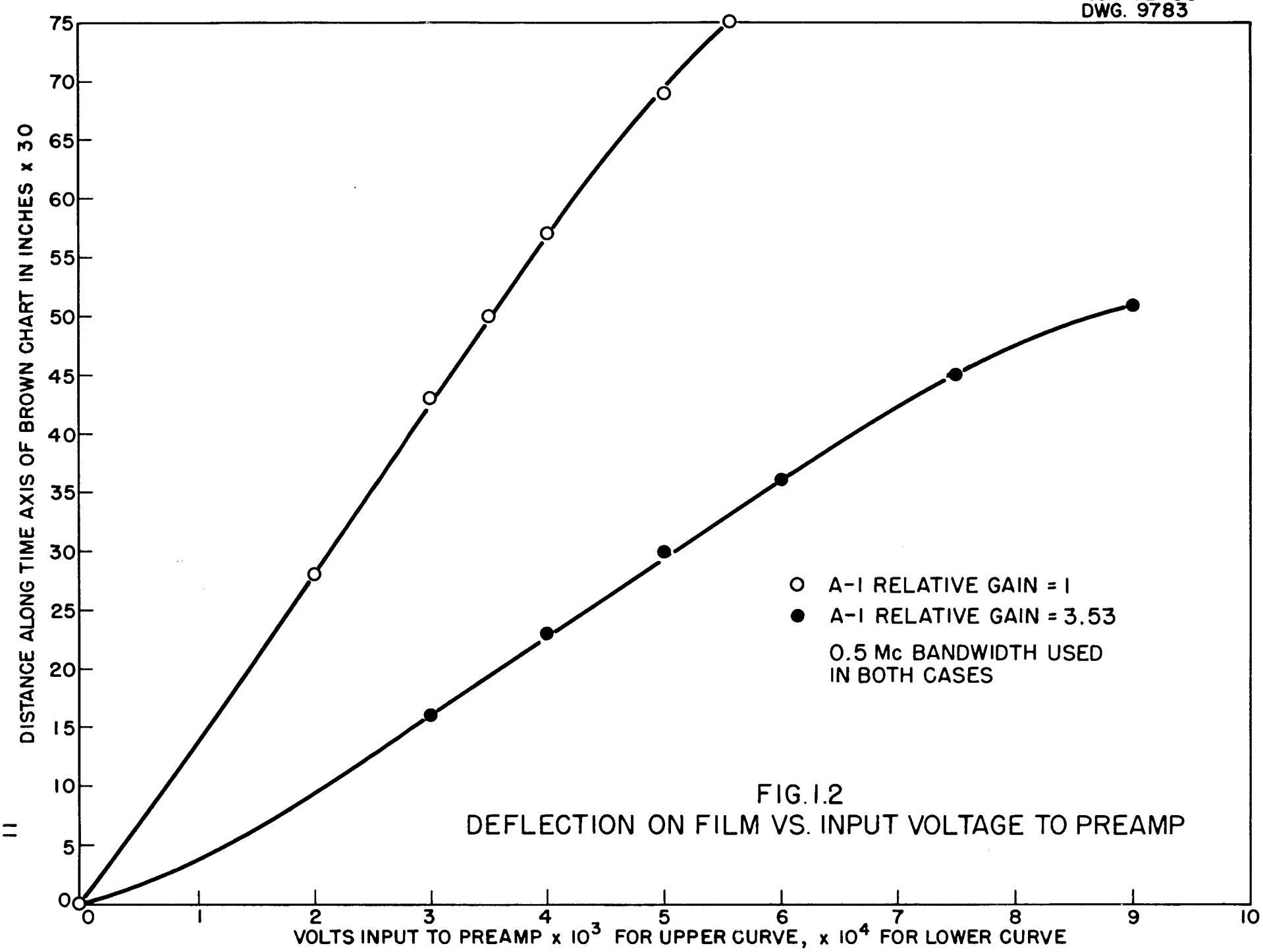

FIG. 1.2
DEFLECTION ON FILM VS. INPUT VOLTAGE TO PREAMP

NOT CLASSIFIED
DWG. 9784

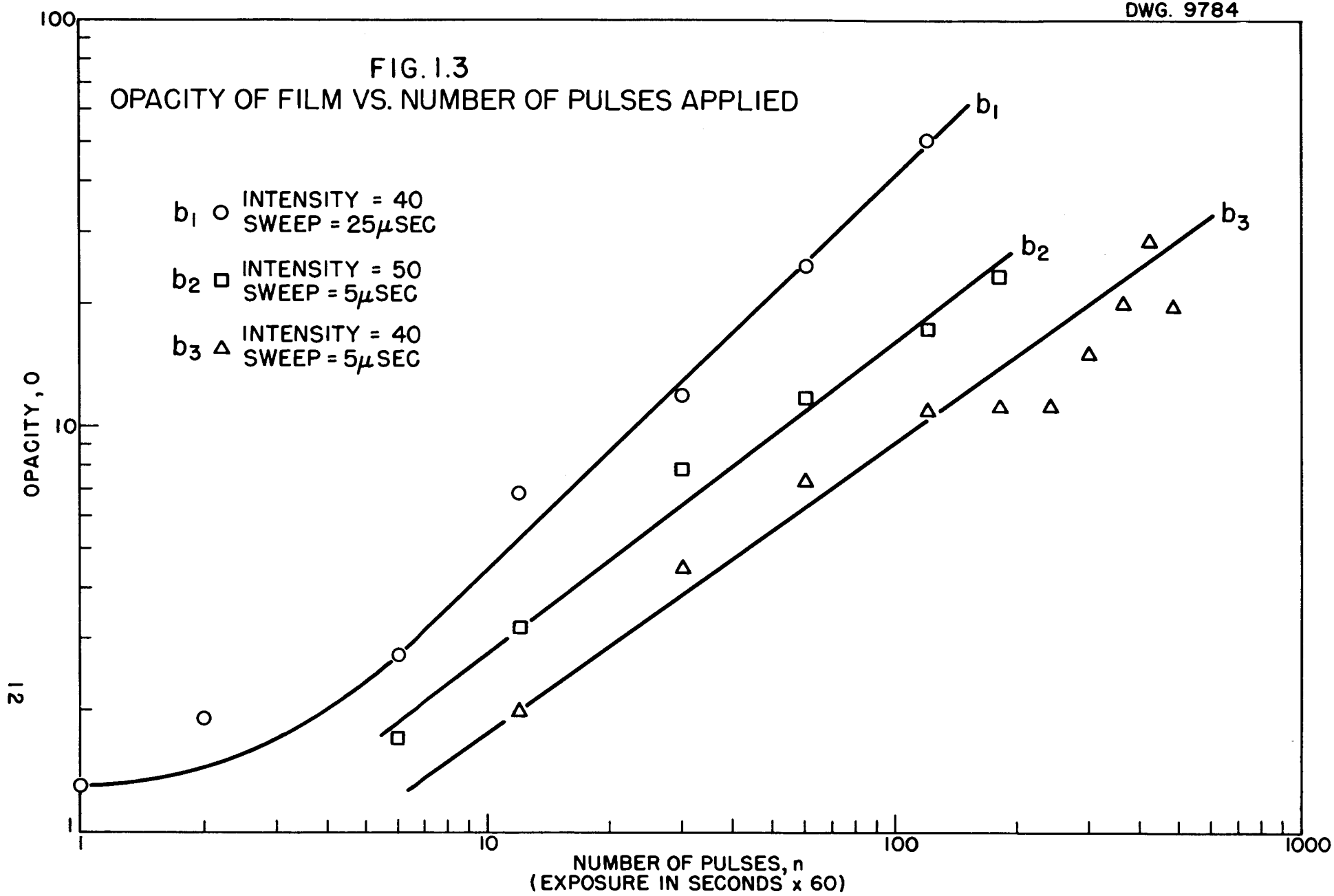

$n = 2.4 \times O^{1.00}$ for curve b_1, $n = 2.3 \times O^{1.34}$ for b_2, and $n = 4.53 \times O^{1.41}$ for b_3.

We thus have relations for translating the opacity (density) of the film at a given displacement from the base line into the number of pulses recorded at a certain energy. Unfortunately, there are considerations which make this calibration less than 100% reliable. For one thing, these calibrating exposures are made in a matter of seconds, with no detectable fogging of the film, whereas sample counts often extend over 24 hr, in which time a certain amount of general fogging of the film is practically unavoidable, from stray light in the tube phosphor if from no other source. This makes a given density on the actual run represent a smaller number of pulses than the calibration indicates. A background film may be run and its density subtracted from that of the sample film, but the true correction is not so simple as this since some of the fogged silver grains if not taken by fog would have been sensitized by the true exposure and, unless rather elaborate sensitometric corrections are made, a certain unreliability from this source must be accepted. The overall effect if background is merely subtracted from the count is that a given density in a measurement represents more pulses than in the calibration.

Inaccuracies may also be caused by the so-called "intermittancy effect." This is a property of photographic emulsions which results in less darkening from an exposure broken up into a number of installments than from the same exposure given continuously. However, a large number of rapidly given flashes approaches the effect of one exposure, and the 60-cps calibration pulses come closer to fulfilling this condition than the randomly distributed and less frequent sample pulses. Hence this effect will also tend to make a given darkening of the sample film represent more pulses than the calibration indicates.

A third source of inaccuracy is the density-vs.-log exposure curve itself since, as seen above, it is only approximately linear. Moreover, the resolving power of the densitometer is somewhat limited, although this is partly due to lag in the Brown recorder and could be improved by slowing down the film drive.

Fortunately, these inaccuracies are practically all in absolute peak heights, not in relative peak heights or energy, and hence should not cause too much difficulty in determining the existence of a peak or calculating its energy. Nonetheless, the peak could conceivably be displaced by a nonuniform

(energy-wise) background at a level close to that of the sample, where subtraction of somewhat inaccurate quantities of comparable magnitudes is involved. The general conclusion is the same as that reached before, i.e., the method is basically less accurate than separate pulse recording and measuring, but ease in reading makes it still worthy of consideration. The method was therefore tried on an actual sample, as follows:

The setup was first energy-calibrated by running a 6500-c/m Sn^{113} sample (24.2-Kev In Kα ray) for 2 min. The resulting densitometer record was plotted as curve c_1 on Fig. 1.4. It is seen that 35.5/30 in. on the Brown chart represents 24.2 Kev, giving 23.3 Kev per inch as the energy conversion factor. A density-vs.-exposure calibration was then made as described before (curve b_3 of Fig. 1.3), and $n = 4.53 \times O^{1.41}$ was taken for this film.

The actual sample was a very weak La^{138} source (about 30 c/m), and a line was expected at 32.3 Kev (Ba Kα ray). An exposure of 24 hr at $f1.5$ was made with the intensity set at 40. A background exposure was made under the same conditions. The results were plotted as curves c_2 and c_3 of Fig. 1.4, and it may be seen that there is a peak at about 32.5 Kev. Figure 1.5, a graph of sample count minus background, shows the form of the energy spectrum more clearly, and indicates that the peak is at 33.0 Kev. This is quite close to the theoretical value.

It is thus seen that under the right circumstances the density method of pulse analysis is capable of giving results comparable to separate pulse recording, and with much less time and labor in reading. However, when closely adjacent peaks must be resolved, when accurate ratios of peak heights are important, or when a high nonuniform background makes correct peak location critically dependent upon subtracted values, the moving-film method should probably be employed.

INSTRUMENTATION FOR NEUTRON DIFFRACTION

J. K. East H. A. Levy
S. W. Peterson

The operation of a neutron-diffraction spectrometer requires that the intensity of a neutron beam be continuously recorded over a large range of

NOT CLASSIFIED
DWG. 9785

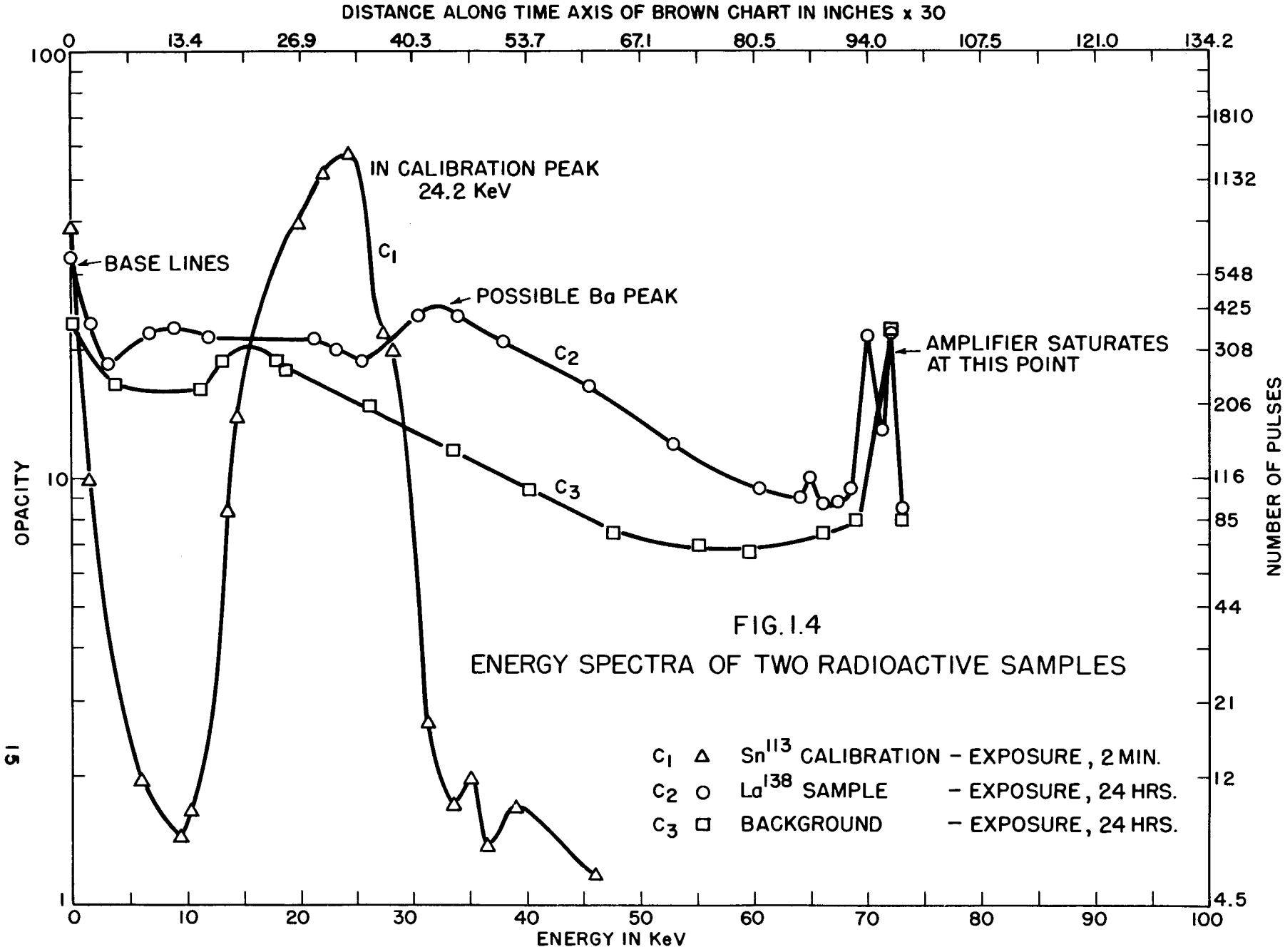

FIG. 1.4
ENERGY SPECTRA OF TWO RADIOACTIVE SAMPLES

NOT CLASSIFIED
DWG. 9786

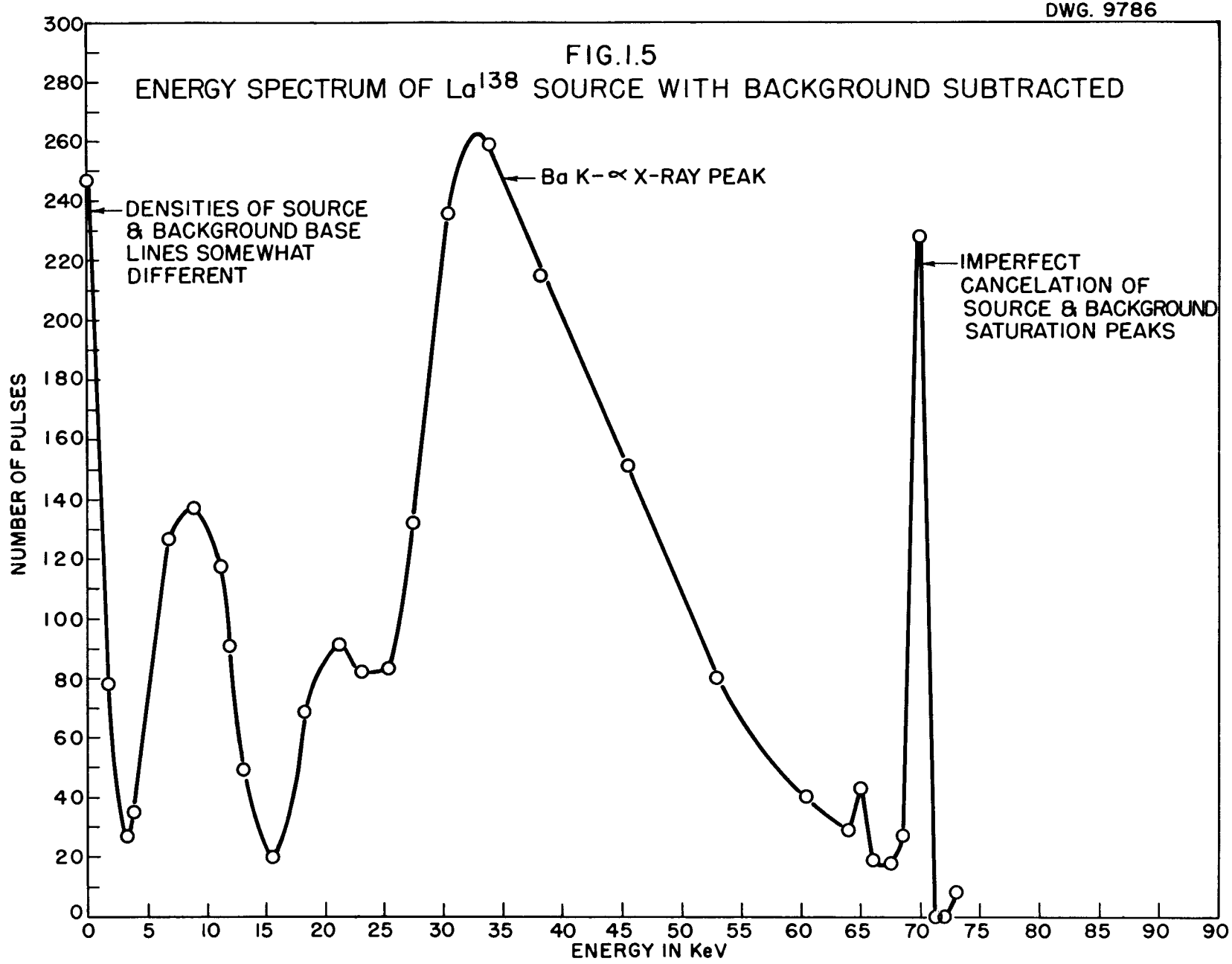

FIG. 1.5
ENERGY SPECTRUM OF La^{138} SOURCE WITH BACKGROUND SUBTRACTED

scattering angle. Because suitable scanning speeds are slow (of the order of 5° per hour), a complete pattern requires 12 to 24 hr continuous running and necessitates a system stable over this interval. Simultaneous monitoring of the incident neutron beam is desirable, and background monitoring is sometimes necessary. For the spectrometer discussed in ORNL-870, p. 110, the counting rate of the diffracted beam is of the order of 50 to 500 neutrons per minute for about 1° of angle subtended by the detector, and peaks in the diffraction pattern have a width at half-height of 1 to 2°.

In two spectrometers designed and operated by E. O. Wollan and C. G. Shull of the Physics Division, accumulated counts over a predetermined time interval (4 or 6 min) are printed by a modified traffic counter. A sequence control mechanism periodically stops the spectrometer and causes the traffic counter to record background by closing a cadmium shutter, or the incident beam intensity by switching to a second BF_3 counter. Plotting the data is laborious, and the time lost during background and incident-beam counts is considerable. In addition, the recording of accumulated counts over a fixed time interval probably does not make optimum use of the data.

We have investigated the use of count-rate meters and strip-chart recorders in this application. Major considerations are the following: (1) the rate meter must have a stable zero over the time required to complete a pattern; (2) the time constant must be adjustable to the minimum statistical fluctuation consistent with the resolution desired in the diffraction pattern; and (3) rather low counting rates must be accommodated. Rate meters incorporating these features, similar to the meter designed for the α-particle range analyzer,[2] have been in use for several months with satisfactory performance. A new rate meter with greater stability and low impedance output has been designed by E. Fairstein (see p. 21) and promises even more satisfactory performance.

In the system now in use (Fig. 1.6) the diffracted neutron beam is detected by a BF_3 proportional counter 20 in. long and 2 in. in diameter, filled with enriched BF_3 (28 cm Hg) and argon (2 cm Hg). The pulses are fed to a cathode-follower preamplifier, then to an A-1 linear amplifier, and finally to a linear count-rate meter connected to one pen of a multipoint Brown

(2) Fairstein, E., "Modifications of the Sweep Type Differential Alpha Energy Analyzer," *Chemistry Division Quarterly Report for the Months June, July and August, 1948*, ORNL-176, p. 85 (Nov. 9, 1948).

NOT CLASSIFIED
DWG. 9807

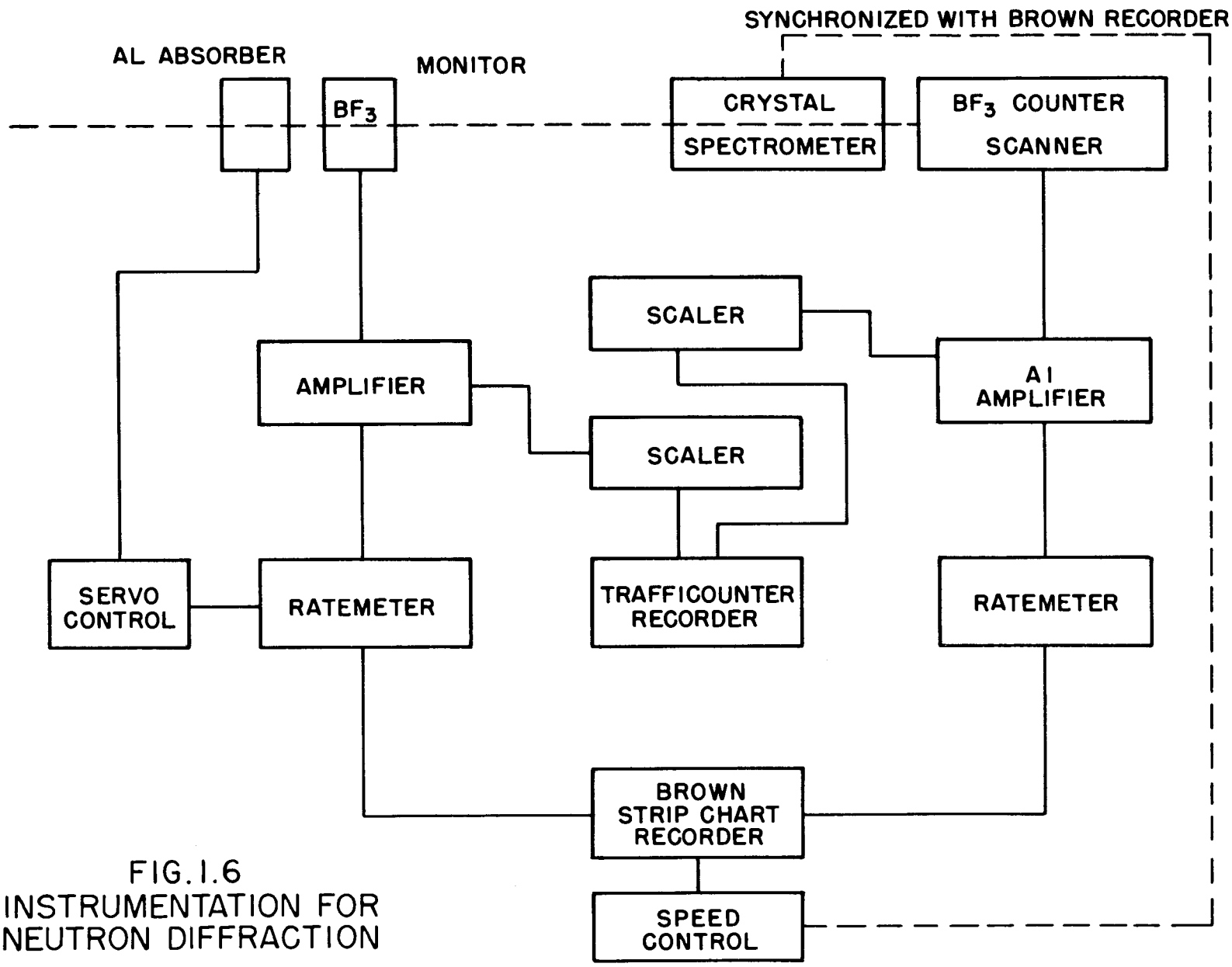

FIG. I.6
INSTRUMENTATION FOR
NEUTRON DIFFRACTION

potentiometer. D-c power, 1900 volts, is supplied by a standard scaler (Nuclear Instrument Company). The incident beam is monitored by a small BF_3 proportional counter with brass windows, front and back, through which the beam passes. About 1% of the neutrons are counted, the pulses being fed to a preamplifier, then to the amplifier of a standard scaler, and to a second linear rate meter, the output of which is fed to a second pen of the Brown potentiometer. The two pens print alternately at 6-sec intervals. The diffraction pattern (Fig. 1.7) and the beam intensity are thus recorded on the same strip-chart.

Since background has been reduced to a negligible level by improved shielding of the large counter, no provision for recording background has been made. Traffic-counter recording of data has been maintained to calibrate and check the behavior of the rate meter but will probably eventually be abandoned.

Further improvements in instrumentation now being prepared are the following: A multispeed drive for the spectrometer which will allow greater latitude in choice of time constant and hence greater precision of data. This is being achieved by a three-speed synchronous motor (900, 1800, and 3600 rpm) manufactured by Electric Indicator Company, Stamford, Connecticut, in conjunction with gear-change mechanism (8:1 to 1:1). This system will allow scanning speeds of ½, 1, 2, 4, 8, and 16° per hour in contrast to the present fixed speed of 5° per hour. Consideration is being given to equipping the Brown potentiometer with a similar motor in order to maintain a fixed relation between scanning speed and chart speed.

A device to maintain the incident-beam intensity constant within limits has been designed and partially constructed. It consists of a pair of aluminum wedges so mounted as to insert a variable thickness of absorber in the incident neutron beam. The wedges are driven by a Brown potentiometer motor actuated by the deviation of the output of the monitoring count-rate meter from a fixed potential.

Limit controls to stop the spectrometer and Brown recorder if the servo described above loses control (e.g., in case of pile shutdown) are being planned.

Experiments are underway on higher pressure fillings of BF_3 counters in order to obtain higher counting efficiency.

NOT CLASSIFIED
DWG. 9920

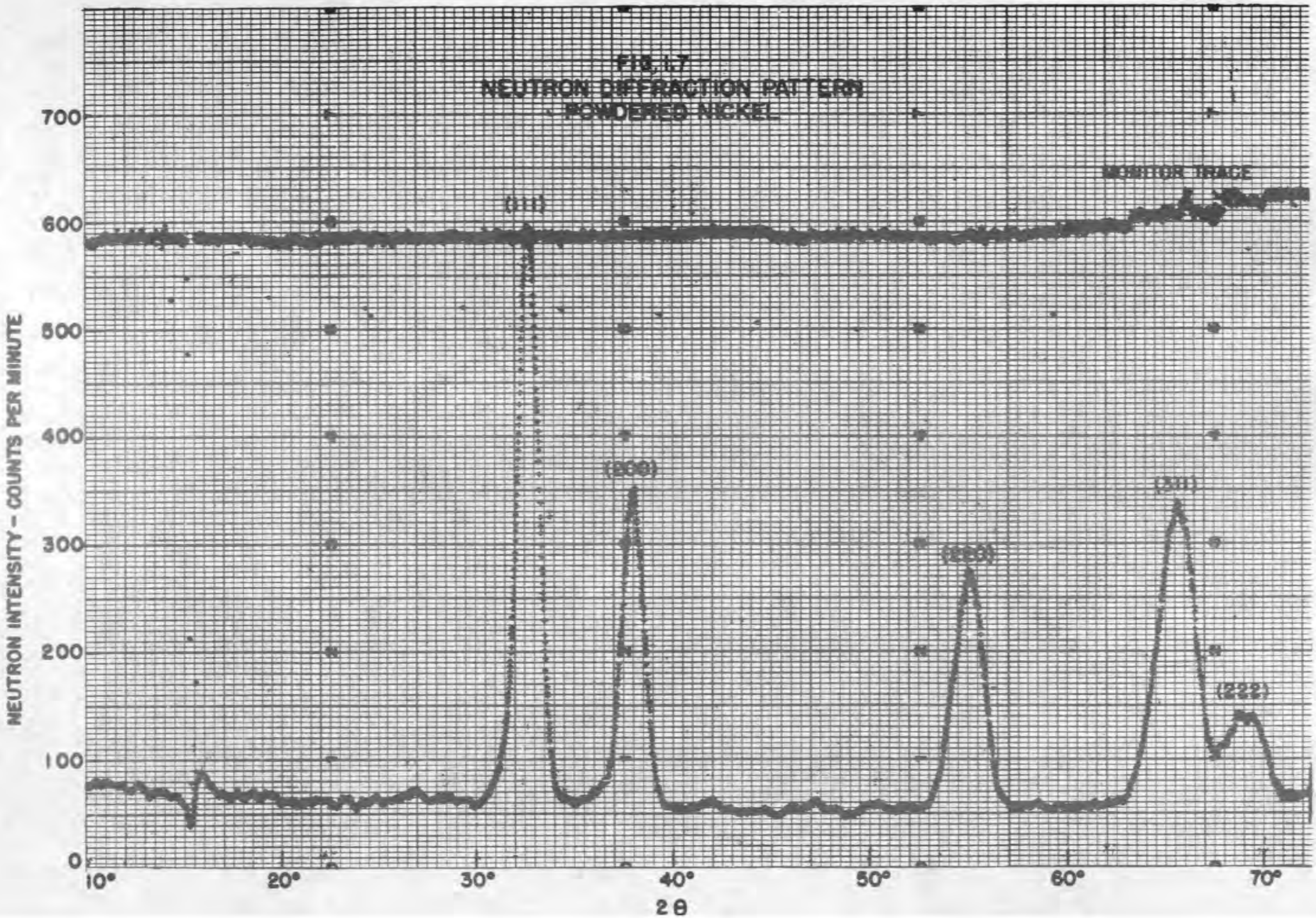

FIG. 1.7
NEUTRON DIFFRACTION PATTERN
POWDERED NICKEL

A RELIABLE COUNT-RATE METER

Edward Fairstein

A linear count-rate meter circuit has been designed for those applications requiring exceptional reliability of operation and very low drift rate. The immediate incentive for its development was the need for a means of recording neutron-diffraction patterns. The first model of the instrument has been in continuous operation for more than a month at the time of this writing with excellent overall stability.

Specifications. The following specifications were set up:

Range. 100 to 200,000 c/m by steps in a 1-2-5 series.

Integrating Time. To give standard deviations of 1.4, 2, 3.8, 4.5, 6.3, and 20% of the full scale reading. Unused integrating condensers are precharged to avoid a jump in meter reading when switching.

Input pulse requirements. Any width from 0.1 to 100 μsec, of either polarity, and of any amplitude between the limits of 0.5 and 100 volts.

Calibration. An internal scalar circuit locked to the supply-line frequency is provided to give a pulse rate equal to the line frequency.

Meter. A 0- to 1-mamp panel meter is provided. There is also a connector to provide a signal for a 10-mv Brown recorder. A 0- to 1-mamp Esterline-Angus recorder can also be supplied from the circuit, although no specific provision has been made for it. The meters operate at ground potential.

Accuracy. ±1% after being zeroed and calibrated.

Drift rate. The long-term zero drift is about 1% of the full scale reading per week. After an aging period of a week the calibration drift is considerably less than this. The short-term drifts are not detectable.

Resolution loss. About 1%, or less, per 100,000 c/m.

Circuit description. A detailed description of the circuit (Fig. 1.8) follows:

T_1 is a diode restorer in the input which is not to be used when operating from an A-1 amplifier.

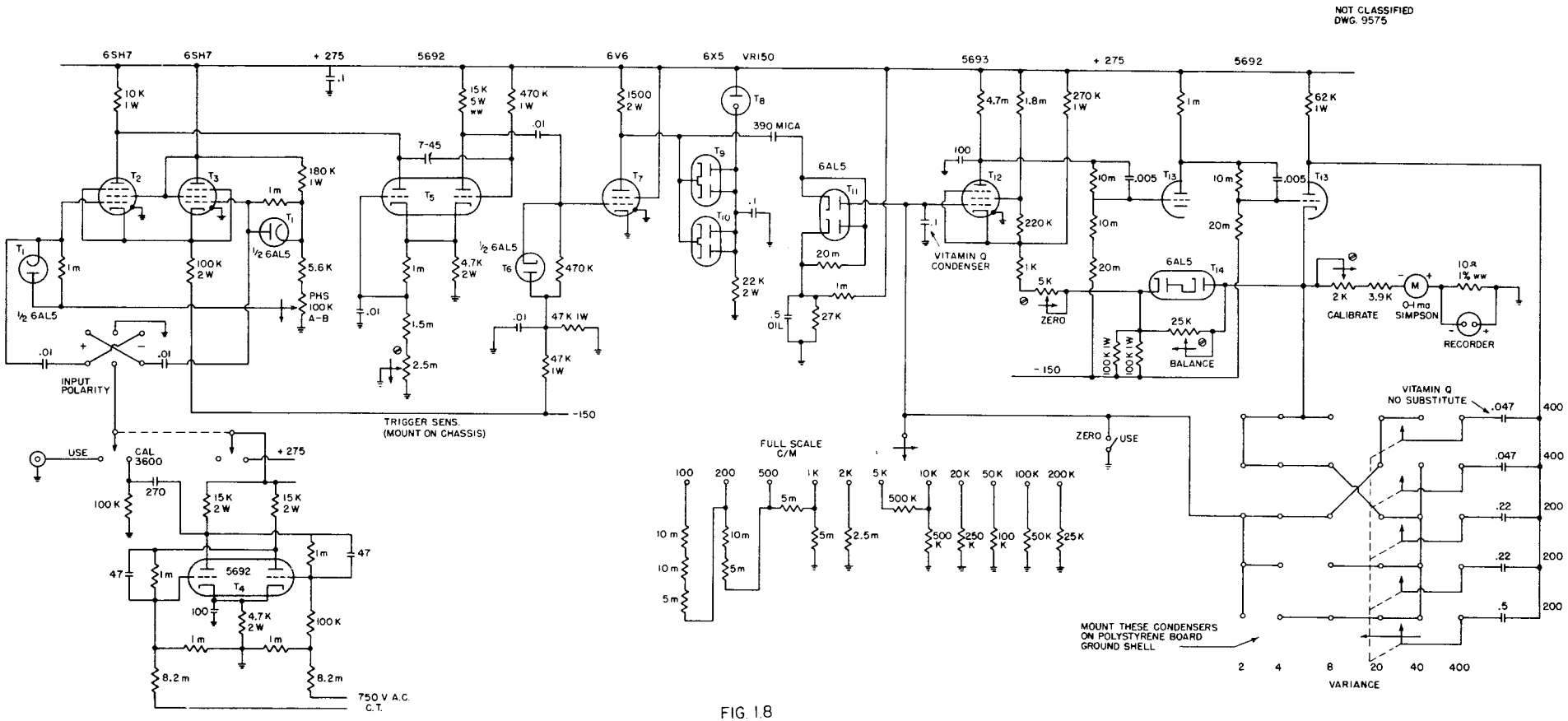

FIG. 1.8
LINEAR COUNT RATE METER

T_2 and T_3 are the pulse-height selector tubes. These are connected as a cathode-coupled amplifier to prevent grid current from flowing with high amplitude pulses. T_3 is normally conducting. The pulse-height selector control varies the bias on the off tube, T_2. Positive input pulses are routed to the off tube and negative pulses to the on tube by the input polarity switch.

T_4 is connected as a scaler to provide the calibrating signal for the rate meter.

T_5 is a univibrator pulse shaper. Its output pulse width is adjusted to 3 or 4 μsec. The circuit is such that the output width is nearly independent of the applied pulse width, even for pulses much longer than 3 μsec.

T_7 is an amplifier with a low impedance output. It is normally biased to complete cutoff. The positive pulse from T_5 drives it far into the grid-current region. T_6 is a diode restorer to prevent bias shifts with changes in counting rate. T_9 and T_{10} are diode clamps to limit the output voltage of T_7 to within 1% of the value determined by T_8. Without the clamps, the output voltage pulse is about 250 volts and is dependent upon the condition of T_7. With the clamps the output voltage is 150 volts and is constant to 1% throughout the useful life of T_7.

T_{11} is the rate-meter diode, use in a conventional circuit.[3] The coupling condenser is such that it becomes charged to over 99% of its final charge in 3 μsec. This makes the calibration independent of small changes in driving pulse width.

The vacuum-tube voltmeter consists of T_{12}, T_{13}, and T_{14}. T_{14} provides compensation for the effects of heater voltage changes. When the balance control is properly adjusted, the voltmeter zero does not change by a perceptible amount for line voltage changes between the limits of 100 and 130 volts. T_{12} and T_{13} are connected as a feedback amplifier. The stabilization factor $(A\beta)$ is about 140. The grid current of T_{12} has a normal range of 5×10^{-11} to 5×10^{-12} amp, depending upon the particular tube. This current is not sufficient to cause a noticeable zero offset under conditions of maximum rate-meter sensitivity. The full scale input voltage is about 5 volts.

To conserve space and cost, low-valued integrating condensers are used. These are connected in the feedback loop in such a way that their effective

(3) Elmore, W. C., and Sands, M., *Electronics*, p. 250, McGraw-Hill, New York, 1949.

capacity is multiplied by 15. This method has one disadvantage: Because of of the voltage drop across the condenser, the insulation resistance between terminals must be at least 10^{11} ohms to cause no more than a 1% zero offset on the most sensitive scale. Luckily, a guard-ring arrangement can be used to eliminate the effects of surface leakage. Vitamin Q condensers (manufactured by Sprague Electric Co.) with the shell grounded have proved to be satisfactory, both from this standpoint and from that of a sufficiently low dielectric hysteresis factor. A polystyrene mounting board is necessary.

Unused portions of the integrating network are connected to the low impedance output of the vacuum-tube voltmeter circuit. This keeps them charged to the proper level to avoid switching transients. It is important that the switch used here be of the open-circuiting type to avoid connecting the voltmeter output and input during the switching process.

The higher valued resistors in the rate-meter circuit should be mounted on a board with better insulation properties than the usual type. Polyethylene-insulated wire should be used for connecting these resistors. The zero-use switch should have a bakelite, rather than paper, shell.

A HIGH-STABILITY LOW-DRAIN PORTABLE HIGH-VOLTAGE SUPPLY

R. A. Dandl and C. J. Borkowski

The high-voltage supply shown in Fig. 1.9 is basically of the relaxation-oscillator interrupter-tube type, without the usual disadvantages. The usual battery-operated high-voltage supply of this type is very sensitive to load changes and battery-voltage changes. The circuit in Fig. 1.9 is so arranged that battery-voltage changes have little effect on the relaxation-oscillator frequency. Changes in interrupter-tube current, as well as load changes, are also compensated for.

The mechanism of regulation is as follows: A change in the battery voltage causes a change in current in the interrupter tube, which results in a change in the high-voltage output. This high-voltage change, acting through the corona regulator, causes a compensating change in the control grid bias of the interrupter tube. Since the relaxation-oscillator voltage is approximately twice the striking voltage of the neon bulb, the oscillator frequency

NOT CLASSIFIED
DWG. 9806

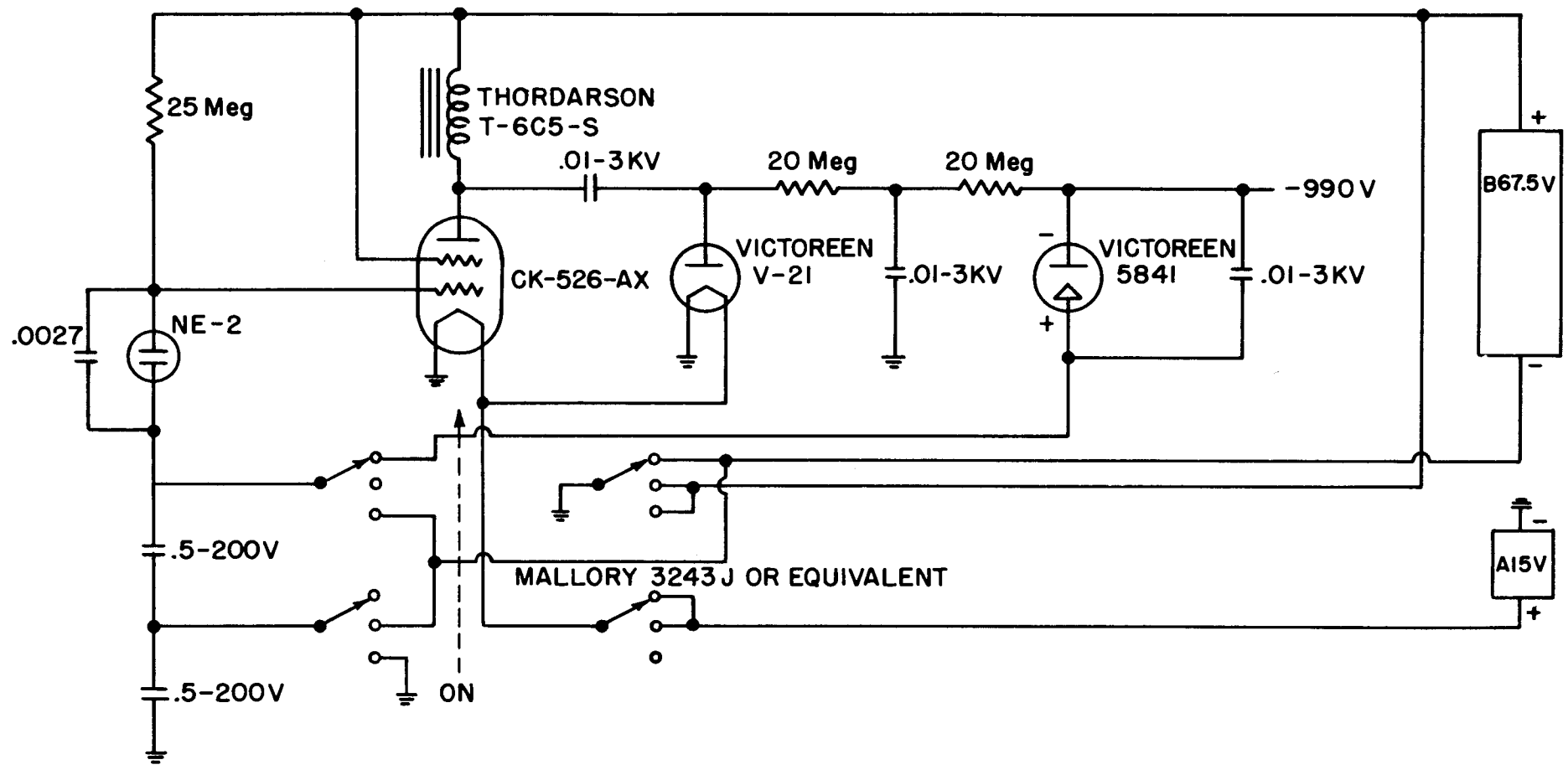

FIG. 1.9
REGULATED BATTERY OPERATED HIGH VOLTAGE SUPPLY

is relatively insensitive to battery-voltage changes, ensuring continuous operation near peak efficiency.

The regulation mechanism for load changes is nearly identical to that for battery-voltage changes. The change in frequency and current through the relaxation oscillator is slight, resulting in almost constant current through the corona regulator tube, which is obviously desirable. It follows that the current through the corona regulator tube is the same as the average relaxation oscillator current; this current can be adjusted by use of an empirical method based on the following equations:

$$i = C(V_s - V_c)f$$

$$f = \frac{1}{RC \log \left[\frac{V_s - V_c}{E_{bb}} + 1 \right]} \tag{1}$$

$$i = \frac{V_s - V_c}{R \log \left[\frac{V_s - V_c}{E_{bb}} + 1 \right]} \tag{2}$$

where

i = current through corona regulator

f = frequency of relaxation oscillator

RC = tank circuit of relaxation oscillator as shown in Fig. 1.9

V_s = neon-bulb striking voltage

V_c = neon-bulb cutoff voltage

E_{bb} = B battery voltage

From Eq. (2) it is readily seen that the corona-regulator-tube current is primarily a function of R, and that the frequency can be changed independently of the current by varying C. The ease of these two adjustments makes the circuit applicable to a variety of tubes and inductors, the procedure being one of setting up the circuit for optimum current drain through the corona regulator and maximum efficiency of B battery current. The corona-regulator current drain is adjusted by varying R, and the frequency for maximum efficiency is adjusted by minimizing the B battery current as a function of C.

The optimum frequency, f_0, is determined by the time, t_0, required for the inductor to become almost completely charged (where $t_0 = K/f_0$, $K \approx 0.25$ for most sharp-cutoff tubes and neon bulbs). If the interrupter tube is left on for a time longer than t_0, too large a fraction of the input power will be dissipated in the resistance of the coil. If the interrupter tube is left on for a time shorter than t_0, too large a fraction of the input power will be dissipated by the screen grid. It should be mentioned that t_0 is an almost linear function of the size of the inductance for inductances with similar saturation characteristics. Also, inductances that saturate at the low levels of peak plate current encountered in devices of this sort are more efficient since they charge up more rapidly, resulting in lower screen losses. Inductors with the lowest resistance consistent with small size are desirable since they permit obtaining the necessary peak plate currents from lower voltage B batteries. A transformer whose primary has the previously mentioned characteristics would be desirable provided the windings are sufficiently tightly coupled.

Table 1.1 gives the performance specifications for the supply shown in Fig. 1.9.

The relatively complicated switching arrangement is necessary to furnish sufficient negative voltage to start the relaxation oscillator and bias the interrupter tube in its operating region. The switch is swept through the center position, and the supply builds up full regulated voltage in about 10 sec. Once started, the corona regulator furnishes the negative voltage necessary to operate the neon bulb.

TABLE 1.1

Performance Specifications for Regulated Battery-operated High-Voltage Supply

E_{bb} = 67.5 volts E_f = 1.5 volts E_{hv} = 990 volts

Changes made to test regulation	$i_{corona\ tube}$ (μa)	i_{bb} (ma)	E_{avg}
None	3	0.33	990
E_{bb} and E_f changed by 25%	2.4	0.33	986.5
Added a load of 217 megohms	2.9	0.75	988
Added a load of 217 megohms and changed E_{bb} and E_f by 25%	2.3	1.1	984

2. HEALTH PHYSICS DIVISION

INSTRUMENTATION AND TECHNIQUES FOR WASTE DISPOSAL STUDIES

Further work has been done on the development of mud probes to estimate the radioactivity from 1 to 18 in. below the surface of the mud in White Oak Lake and under various depths of water up to 12 ft. The instrument consists of a thick-wall stainless-steel G-M tube detector mounted on the end of a jointed aluminum tube and assembled with a portable survey meter adapted for this purpose. The instrument has been calibrated with a radium standard to give readings and has a range of from approximately 0.01 to 100 mr/hr on four scales. It was field-tested during this period and was used to estimate the exposure received by organisms submerged in the mud below White Oak Dam. A newly designed gamma detector for this probe is being constructed. A beta detector also has been designed.

Progress has been made in the further development and testing of other instruments for use in the Ecological Study and other field survey projects. The fish probes are being calibrated by taking readings on live fish through the mouth and then sacrificing the fish for dissection and radioassay. A continuous proportional sampler of the "Trebler" type has been delivered and is being installed in the effluent weir box at the settling basin. Some tests have been made of the auger type mud sampler, and an underwater sampler for taking samples at the water and mud interface is being developed.

Two workers in this group, with advice from specialists in other groups, are working on methods for improving the efficiency of counting the disintegrations in samples containing unknown mixtures of radioisotopes of various energies. The approach adopted is to (1) determine the counting efficiency of beta particles as a function of the energy of the particles, and (2) to develop a method to determine a mean energy for a mixture of isotopes from which a mean counting efficiency may be obtained. A tentative method has been developed and work will be continued in an effort to evaluate the factors that affect the accuracy of this method.

The fisheries biologist of the Ecological Study and a radiochemist of this Section have developed techniques for handling fish tissues through digestion and radiochemical separation procedures on a volumetric basis so as

to eliminate all routine weighing of samples after the initial weighing. This procedure has been tested and outlined in detail and is being adopted for routine work on all suitable biological samples.

Further details of the waste disposal studies in the Health Physics Division are given in the quarterly progress report of the Waste Disposal Research Section for the period July 1 to September 30, 1950.

CONSTANT WATER MONITOR

In tests of a scintillation counter the gamma counting efficiency was found to be discouragingly high in view of the fact that what is desired is principally a beta counter. This type of work was accordingly shelved.

A continuous-gas-flow proportional counter, 100 cc in volume with a 0.0005-in.-thick aluminum window, was tested. Preliminary measurements gave a background count of about 70 c/m over a 15-min interval, and 210 c/m when water having 440 d/m/cc was under the counter window. This attack appears promising; the associated apparatus is being simplified and refinements are to be made.

Of some interest is the possible application of this instrument to monitoring Building 2001. When exposed to a flux of about 100 fast neutrons/cm^2/sec the counting rate increased by a factor of 7. Our counting room would possibly profit by the presence of such a background monitor having a chart (Esterline-Angus recorder) for rapid visual inspection.

RADIOFREQUENCY HIGH-VOLTAGE SUPPLY

A laboratory H.-V. supply to provide regulated, adjustable output from 500 to 2000 volts, maximum current drain 0.001 amp at regulated output, 0.0018 amp at short circuit for safety, is being packaged and drawings are to be made.

3. INSTRUMENT DEPARTMENT

VACUUM SYSTEMS AND COMPONENTS

R. W. Bennett

New vacuum systems have been designed and built for the 2-Mev Van de Graaff and the Cockcroft-Walton 400-kw tubes. Although at present oil diffusion pumps (Distillation Products MCF-300, which are designed for pumping gases of low molecular weight) are being used, it may be desirable for some experiments to substitute mercury pumps. Consequently the systems have been constructed entirely of stainless steel. Refrigerated baffles are installed just above the oil pumps and kept at about -70°C by using Freon 22 and two stages of compression. In addition, each system has one appendix type liquid-nitrogen trap arranged so that it may be shut off from the main system and roughed out with a forepump while being heated to remove contaminants collected from the high-vacuum system. Thus, the vacuum systems may ordinarily be operated without the cold traps, yet they may be used as sinks to remove volatile contaminants which may accidentally get into the systems. The Cockcroft-Walton setup uses two such pumping systems with a common cold trap, all arranged with high-vacuum valves so that either system may operate independently of the other for reliability and also for increased pumping speed.

The high-vacuum valves were made from stainless steel T's giving 90° valves. Soft-rubber seats and O-ring seals around the stems were used. These have proved perfectly satisfactory and involve simple construction.

Mr. Watson of the Y-12 Area has developed a very fine technique for electropolishing (essentially a reverse process to electroplating) stainless steel. This has been applied to electrodes for use in a new proton tube for the 2-Mev Van de Graaff. Although the surface finish after electropolishing may be very little smoother than before polishing, say 3 to 6 rms microinches, the striking feature is the complete absence of all sharp serrated lines or pockmarks with sharp edges.

ION-OPTICS

R. O. Case, Jr.

The Pierce cathode design curves for production of rectilinear flow in electron beams have been adapted to a form which may be useful in the design of ion sources.

The electrolytic tank and its associated equipment have been modified and provided with an independent 400-cycle power supply.

The potential field at the pumping end of the Van de Graaff has been plotted. From this plot certain ion and electron trajectories were computed, as suggested by Turner, for the study of "total voltage" breakdown. The report and photostat of graphical data have been submitted to Turner, and copies have been prepared for local distribution.

A model of a possible lens system for the Van de Graaff is being constructed. Using the electrolytic tank, the potential field of this lens for several voltage ratios has been plotted. In process are computations of ion trajectories necessary to the determination of the optical characteristics of the lens.

ADDITIONS TO THE ACCELERATOR BUILDING

R. F. King

The second floor of the Accelerator Building has been extended to give approximately 75% more floor space. The most important piece of equipment to be housed in the new space will be the new 400-kv tube with its high-speed vacuum system. This unit is designed to handle beams in excess of a milliampere and is located so that neutron work may be performed with relatively little trouble from scattering. Since some doubt remains as to how troublesome this factor may be, the location was chosen so that the beam could be piped out through the wall of the building, whereupon it would emerge about 20 ft above the ground.

RADIOFREQUENCY ION SOURCE

H. Reese, Jr.

An R.-F. ion source operating at a frequency of 100 megacycles has been developed by members of the Physics Division. It is felt that further improvement is possible, but in its present state it is suitable for use with the Cockcroft-Walton accelerator. It is capable of yielding a total beam current of 1 ma, of which 65% is H^+, with a gas flow of about 15 atmosphere-cc per hour. The source is shown in Fig. 3.1.

DWG. 10458
UNCLASSIFIED

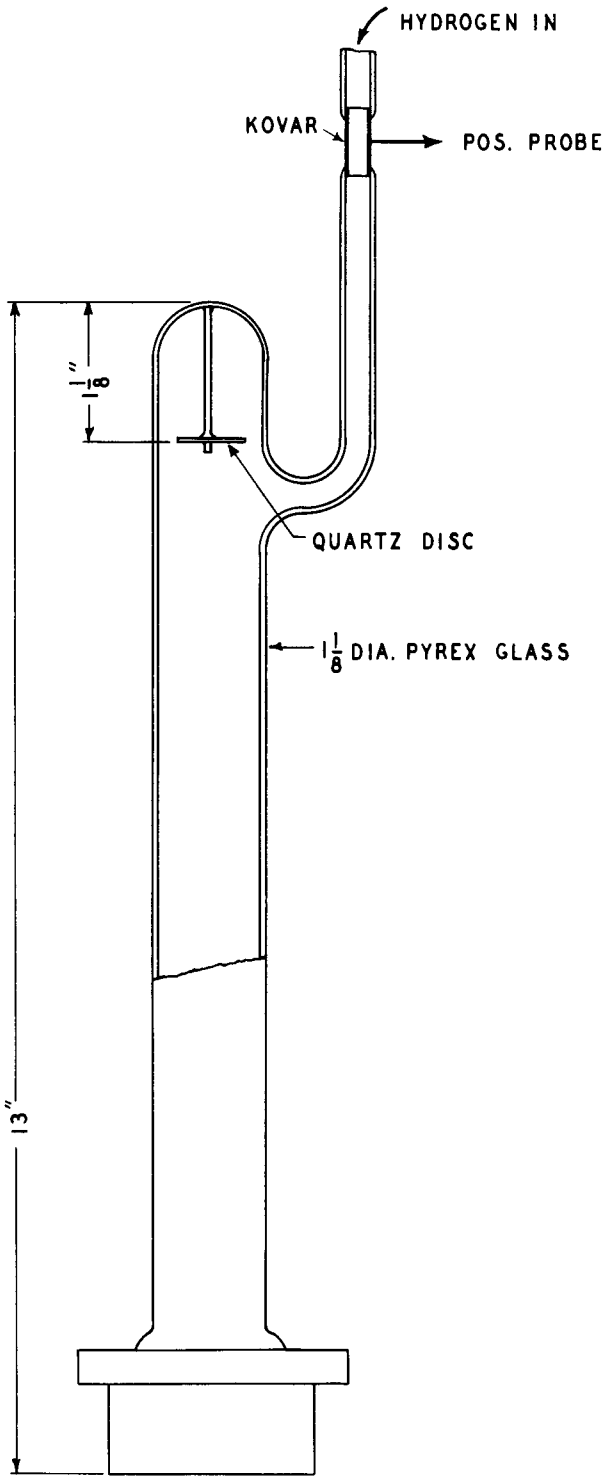

R. F. ION SOURCE

SHOWN HALF SIZE

FIG. 3.1

The R.-F. energy is coupled electrostatically to the source through two electrodes which surround the bottle and which are situated 2½ and 4 in., respectively, above the base of the bottle. The R.-F. power used is about 60 watts. With the configuration shown, the successful operation of the source depends upon an axial d-c magnetic field of about 100 gauss and a positive probe voltage of 4 kv for maximum ion current.

The only dimensions of the source which are known to be critical are those in the neighborhood of the beam exit canal. Figure 3.2 is a detailed drawing of this section.

All metal parts except the end of the beam exit canal should be shielded from the discharge by glass (Pyrex glass was used throughout). This will reduce secondary electron current to the positive-probe power supply and keep recombination to a minimum. If the electron current is not kept low, overheating of the bottle will result. The upper end of the metal exit canal and the end of the glass cylinder surrounding it should be made flat and horizontal to shape the discharge correctly in that region. The annular glass piece surrounding the exit canal is used to prevent the gradient through the glass at that point from becoming excessive.

TELEMETERING FOR 2-MEV VAN DE GRAAFF

H. Reese, Jr.

A system has been constructed to telemeter information from the high-voltage terminal of the Van de Graaff generator to the control panel. The signal to be indicated at the control panel is converted into a d-c signal of 0 to 1 volt amplitude. This is then used to control the amplitude of an 800 cycle per second signal which is applied to a prefocused flashlight bulb. The signal is received at the bottom of the column by a 1P42 phototube and, after amplification by a constant-gain a-c amplifier, is rectified and read on a 0- to 100-μa meter. The amplifier is tuned to 800 cycles per second to eliminate effects of ambient light.

The system contains five channels as built for the Van de Graaff, but any number can be put in parallel. It has not been operated in the generator as yet but has been successfully bench-tested.

DWG. 10459
UNCLASSIFIED

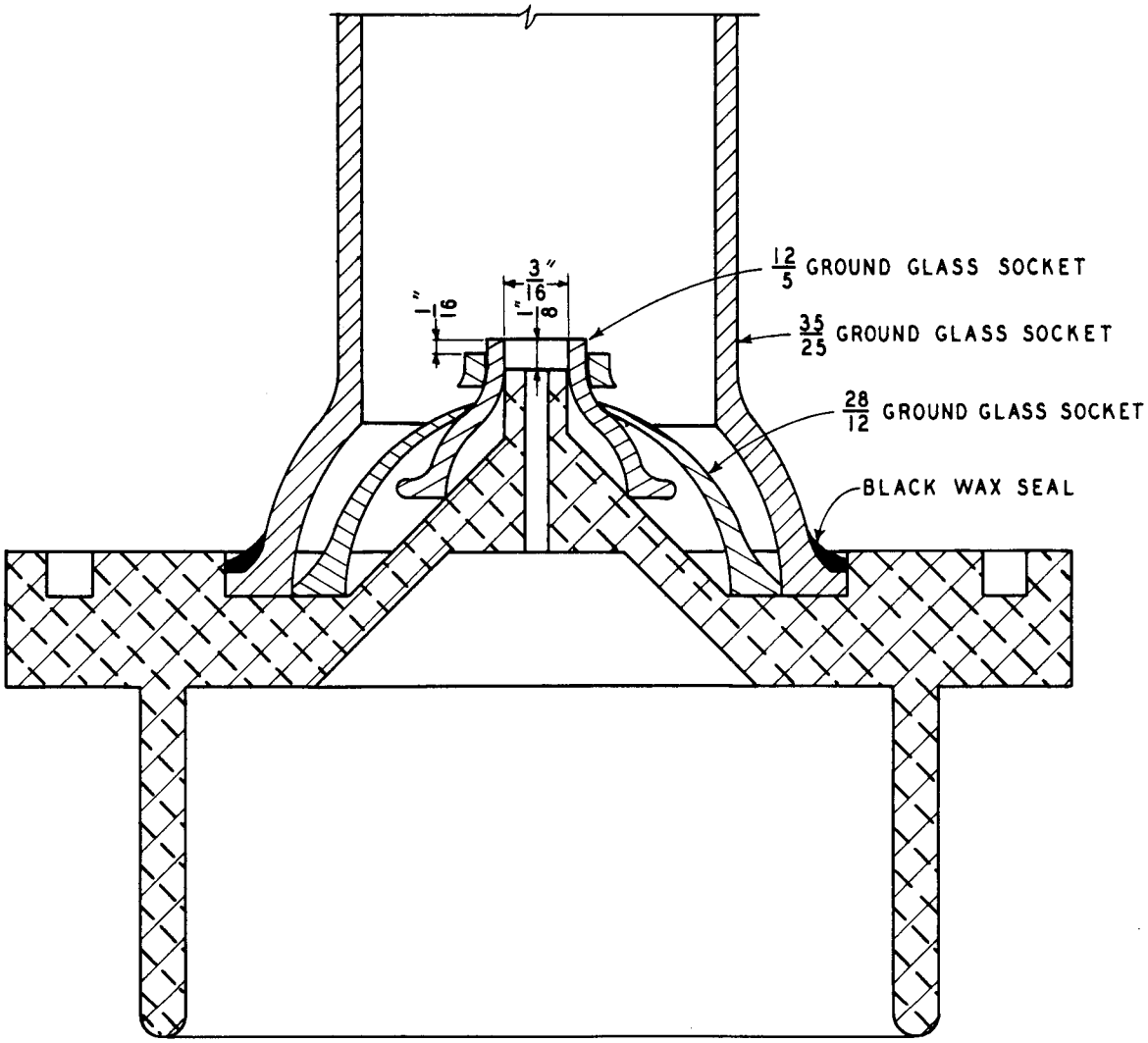

BASE DETAILS - R. F. ION SOURCE

ENLARGED TWICE SIZE

FIG. 3.2

ACCELERATOR-TUBE DESIGN STUDIES

R. W. Lamphere

With the aid of an electrolytic tank, the potential distribution within a long Van de Graaff accelerator tube was obtained. The tube modulus was 1 in., the inside diameter of the insulator was 4½ in., and the inside diameter of the electrode was 3 in. The electrodes were funnel shaped with ¼ in. overlap; the beam therefore "sees" a series of conic sections telescoping ¼ in. into each other in a downward direction, with the side of the cone making an angle of 23° with the vertical. It is thought possible that secondary electrons may be emitted from these metal surfaces by ion or X-ray bombardment. In order to see what role, if any, they play in tube breakdown, a trajectory was plotted assuming the upper end of the tube to be at positive potential and also assuming the electron to be emitted with zero initial velocity from a point about ¼ in. from the lower lip of the cone. The results showed that such electrons will travel up the tube without striking any other electrodes and hence will not cause electron multiplication by the process employed in electron multiplier tubes. The field plot indicates that electrons originating at other points on the surface with zero or only a few volts energy will follow similar paths except that a retarding field precludes their emission over the lower 3/16 in. of the surface, and those emitted above a certain point will, of course, strike the inner surface of the next electrode.

It was thought that upstreaming electrons might possibly be trapped in the interelectrode spaces by means of annular rings set at an angle to the tube axis and spaced at intervals along the inside of the tube. Such a scheme is used in the Los Alamos Van de Graaff, but unfortunately it is not known how much they contribute to the voltage limit of the tube. Using rings of 5/16 in. annulus and 3 in. outside diameter spaced at intervals of 5 in. along the tube, fields were obtained for tilt angles of 17, 20, and 22°. Trajectories were then plotted for electrons originating in the metal surfaces between rings. The results showed that although the rings were not so effective as had been hoped, there was enough benefit to warrant tests on a full-scale tube. Consequently, ten of these rings set at a 24° angle will be included in the first tube to be built. This tube is to consist of sixty 1-in. glass sections, stainless steel electrodes, and rings spaced every fifth electrode, beginning with the third from the bottom. Computations involved in these

studies were carried out by Mr. Kington and Mr. Perhacs. A short tube length of 15 sections was sealed together and the sections were tested one at a time in the "rocket." The following facts were learned:

1. A high polish is substantially superior to a rough surface for electrodes. For flat stainless steel electrodes with a No. 7 mill finish which measured 3 rms microinches surface roughness, the sections held an average of 150 kv, whereas for the same geometry but with surfaces roughened by grinding with 220 grit, measuring 55 rms microinches, the voltage held per section averaged 107 kv.

2. Properly annealed glass seems to be superior electrically to glass containing large initial strains. The above tests were run with the strained glass, several hundred pieces of which were sent to us by the Corning Glass Works. Corning later improved their process so that they could supply blanks with strains well relieved. These sections averaged 200 kv between flat polished stainless steel electrodes, contrasted to the over 150 kv for the strained glass.

3. Referring to the conical electrodes, the lower lip is rolled outward to eliminate small radii, since this lip is the critical point for cold emission. It was found that a very high polish resulted in the cold emission being raised to 65 kv, whereas it was only 50 kv with medium-grade polish. This is, of course, with the lip negative, corresponding to the use of the tube as an electron accelerator. A new type of electrode has been designed which is calculated to raise this limit by about 50% more. These are now in the process of being tested.

NEUTRON DOSIMETER COUNTERS

H. N. Wilson

Since this instrument was reported in the Progress Report of Mar. 15, 1950, by the Health Physics Division, two portable units have been built for other AEC installations. One is now in process for the Naval Research Laboratory. Several counters have been built, including one nondirectional counter.

X-RAY COUNTER

D. J. Knowles

Extensive work has been done on obtaining a side-mica-window proportional counter for X-ray counting. The shell is aluminum with a xenon-methane filling. This type of counter used with a differential pulse-height discriminator

shows a decided improvement over the G-M counters previously used. Backgrounds of 5 counts per hour are obtainable, with the counter sensitivity for X rays remaining the same as for the G-M tube.

PLASTIC-END GEIGER COUNTER

R. E. Zedler

Several brass-wall counters using fluorothene and teflon ends to replace the standard metal end and Kovar seals have been made. These counters have been vacuum-tested and found to have no leaks. Work is now in progress to obtain a satisfactory filling.

ELECTROMETERS

F. M. Glass

Work has been done on three different types of fast-response electrometers. The work has done more or less to explore the possibilities of each type.

The first, a d-c amplifier type employing 100% feedback, has a sensitivity of 10^{-13} amp full-scale reading. The response time is approximately 1 sec on all ranges.

The second type makes use of an electronic chopper consisting of a balanced pair of 6AS6 gate tubes and an a-c amplifier and phase-sensitive discriminator. Again 100% feedback is employed. The converter efficiency of the electronic chopper is from 4 to 6.

The third consists merely of a balanced pair of 5803 tubes and a balanced 5691 tube used as a cathode follower. This combination matches the ion chamber to a 100-mv Brown strip recorder from which the null voltage is diverted back to grid circuit of the 5803 tube to include the impedance-matching tubes in the feedback loop. This results in better stability and faster response.

None of these instruments is ready for use until further development has taken place.

VACUUM-COATING UNIT

R. I. Luman

A Distillation Products coating unit was put into service early in September and has been in practically constant use since September 15. Several jobs have been done for the Physics and Chemistry Divisions. Films of silver and aluminum have been put on lucite for use with scintillation counters; 20-μg thicknesses of gold have been deposited on thin formvar films; boron has been successfully evaporated; and glass plates have been coated with nickel as well as aluminum. A total of 26 service jobs have been completed to date.

RADIATION DETECTION ENGINEERING

R. I. Luman

During the period of this report 36 special ion chambers and counters were designed and built for the Research Divisions; counter and chamber assembly and checking were done.

AUTOMATIC DECAY COUNTER

I. D. Groves and R. M. Farnham

At the request of S. A. Reynolds of the Chemistry Division, an Automatic Decay Counter has been designed, constructed, and used for several months. The instrument consists of three units. The first unit houses a shielded counter and preamplifier, absorbers, a 12-position sample table, and adjustable controls for count and cycle time. The second unit is a scale of 64. The third unit is a recorder which prints each sample number and count on paper tape. A simple adjustment allows efficient use with fewer than 12 samples. Operation may be intermittent with manual control, or automatic and continuous.

NUCLEAR PLATE CAMERA

R. M. Farnham

At the request of Dr. J. L. Meem of the Physics Division a nuclear plate camera has been designed and built for obtaining neutron-spectrum data. The

camera is similar to a unit used at Los Alamos and consists of a vacuum-tight aluminum housing in two sections. The forward section is a collimating tube followed by a polyethylene proton radiator. The main shell contains a platinum shield with a center aperture followed by aluminum absorbers and photographic plates—all located with precise geometry in respect to the radiator. The back cover is removable for access to absorbers and photographic plates.

COINCIDENCE-ANTICOINCIDENCE COUNTER

R. M. Farnham

At the request of Dr. J. L. Meem of the Physics Division a coincidence-anticoincidence counter has been designed and constructed for remote underwater operation. Incident gamma radiations pass through a collimating section to enter a single shielded counter. From this counter secondary electrons pass through aluminum and/or copper absorbers to enter a shielded double counter. Eight absorbers are machined into each absorber wheel and are selected by the actuation of two rotary solenoids. The housing also contains preamplifiers for the counters. At present an addition is being designed for improvement of absorber positioning, and improved counters are in the experimental stage.

LIQUID-LEVEL TELEMETER

K. H. Kline

The liquid-level telemeter has been completed and is ready for test purposes. The device consists essentially of an R.-F. oscillator (*A*) (see Fig. 3.3), a detector assembly (*B*), and a servomechanism (*E*, *F*), to control the frequency of the oscillator. The detector assembly, which is the part of the instrument in contact with the liquid to be measured, consists of two coaxial stainless steel lines (*H*) with air dielectric. One of the lines is loaded with a condenser to make it resonate at a frequency about 1 megacycle lower than the other coaxial line. Two 1N58A germanium diodes (*G*) are connected to the center conductors of the lines in such a way that the combined rectified R.-F. voltages on the two lines oppose each other and add to zero when the R.-F. frequency fed to the lines lies between the resonance frequencies of the

DWG. 10460
UNCLASSIFIED

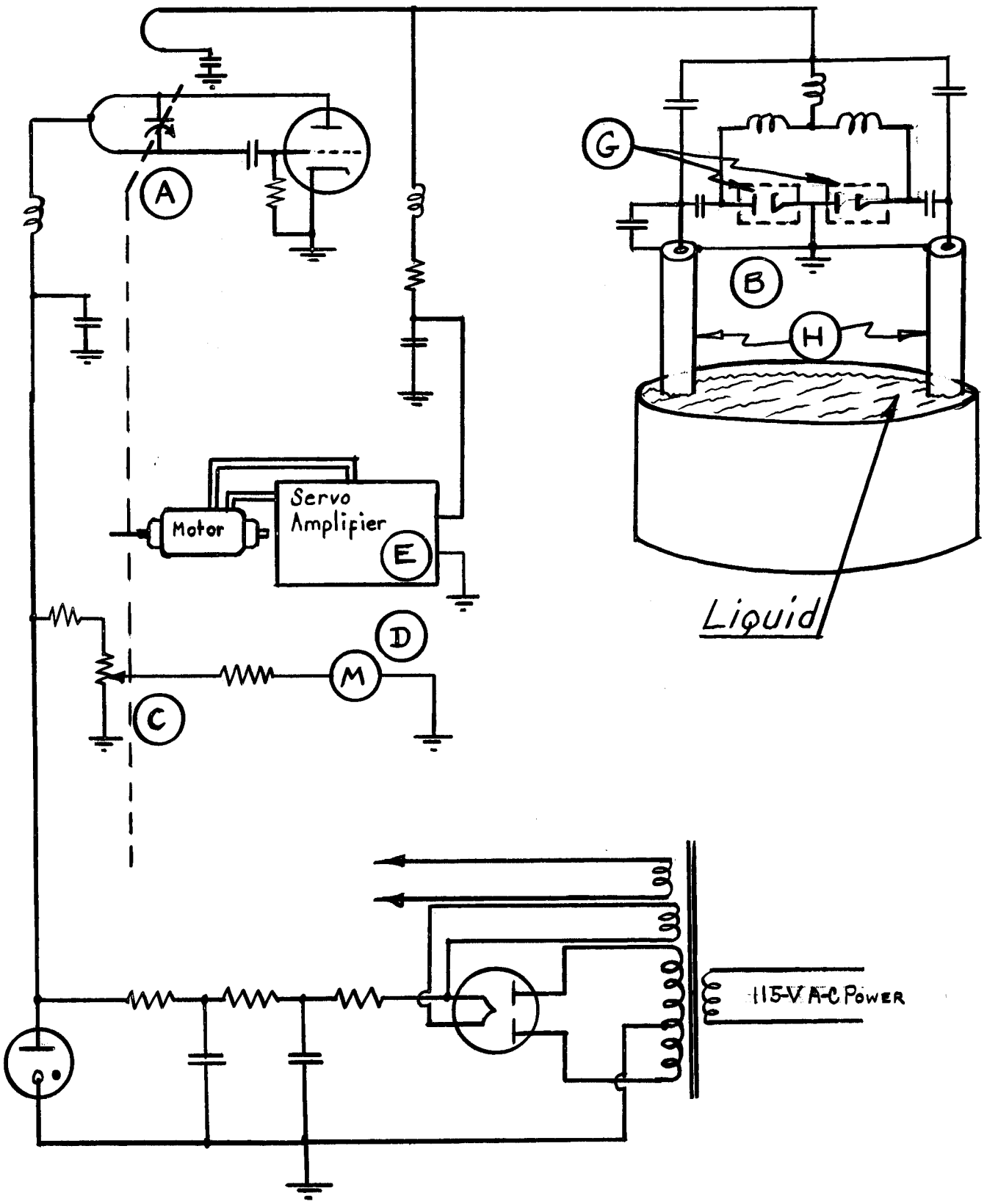

FIG. 3.3

two lines. The d-c signal derived from these two 1N58A diodes is then fed to the input of the servomechanism (*E*), which mechanically controls the frequency of the R.-F. oscillator.

If a conducting liquid is now allowed to rise into the coaxial lines, a d-c voltage is had at the 1N58A diodes which will cause the servomechanism to change the frequency of the R.-F. oscillator until it is again at the center frequency between the new resonance frequencies of the coaxial lines. The frequency of oscillation, for this condition, is then an indication of the level of the liquid within the coaxial lines. Likewise, any change of liquid level in the lines will cause a corresponding change in the frequency of the oscillator.

To facilitate the reading of the oscillator frequency, a precision variable resistor (*C*) is connected to the oscillator controlling servomotor, and the resistance between the arm of the variable resistor and one end is read on a meter (*D*) which may be calibrated in inches or centimeters of liquid level.

Patent Application No. 178,696 has been filed.

NEUTRON TIME-OF-FLIGHT SPECTROMETER, 84-CHANNEL SCALING UNIT

I. D. Groves

Most of the design work has been completed on the electronic circuitry of the neutron spectrometer. The test and control circuit has been constructed as well as one panel consisting of six scaling channels complete with Wizard registers and interpolation lights (1-2-4). The operation of these units has been quite satisfactory. The Circuit Shop is now in the process of constructing 14 scaling panels. When completed, the entire unit will have 84 channels in operation.

An optical system will be used to generate the pulses indicating the instant of the neutron shutter opening and closing. A 931A photomultiplier is used in this circuit. A magnetic indicating system was experimented with but was later discarded in favor of the optical system.

When completed the unit will be housed in three 6-ft open relay racks. The scaling chassis are mounted vertically and are perpendicular to the front panel. These units are accessible for servicing while in the rack.

A complete spare scaling panel is provided and may be quickly placed in service if one panel becomes inoperative. If all 84 channels are not required and any panel becomes inoperative, six scaling channels may be easily by-passed and normal operation of the other units maintained.

INDUCTION FLOW METER

W. G. James and P. E. Brown

Considerable difficulty has been experienced in attempting to apply the induction flow meter to the range of 30 cc/min. To simplify the problem, an 11-c/s magnet is replacing the 60-c/s magnet. This necessitates a redesign of the magnet power supply, the magnet coil, and the voltage amplifier. Considerable improvement should result from the fact that the extraneous 60-c/s noise voltages can be eliminated and from the fact that the zero-flow induced voltages in the primary detector decrease directly as the magnetic flux frequency decreases. The flow signal is independent of frequency down to frequencies below 10 c/s.

An amplidyne motor-generator set with 11 c/s excitation on the control field is being used as a source of supply for the magnet until its exact requirements are determined. The construction of an 11-c/s push-pull preamplifier is underway; a previously constructed single-ended preamplifier has proved inadequate for rejection of zero voltages.

The Glass Shop is attempting to construct satisfactory electrode assemblies. The housing for the primary detector is nearing completion in the Machine Shop. An 11-c/s magnet coil has been designed, but its suitability has not been determined conclusively.

TEMPERATURE-CONTROL PANEL FOR CRYSTAL-GROWING APPARATUS

George Ritscher

The thermocouple control panel is part of a rather elaborate apparatus which Dr. Schenck of the Physics Division required for his studies in growing lithium compound crystals. The whole apparatus was designed to maintain

closely a desired temperature program in a furnace especially built for growing crystals.

The thermocouple control panel has two primary purposes—switching of the various thermocouples to bring about the desired type of control for a particular "run," and providing a motor-driven variable-bias control for supplying a potential to "buck" most of the emf of the control thermocouple. By means of the motor-driven bias control, a slowly decreasing, or increasing, temperature can be obtained.

The necessity of using platinum-rhodium to platinum thermocouples with their relatively low emf and the requirements of extreme stability made attention to thermal emf's very important. Because high-quality thermocouple switches were not readily available, special switches were designed and were built in the shops. Resistance elements were of highest quality available, and, as a further precaution, resistance elements, switches, and the air cell supplying current for the bias supply were housed in a temperature-controlled cork box.

To obtain the motor-driven variable bias, a Helipot was driven through a speed changer so that a program could be made to last for any length of time between 30 min and 48 hr.

CREEP TEST LABORATORY INSTRUMENTATION

J. Lundholm, Jr.

The instrumentation for the new ORNL Metallurgy Division Creep Test Laboratory has been installed, and a number of the units have received initial testing. The rigid requirement of straight-line control in the 0 to 1000°C range made it necessary to select electric proportioning control with droop correction to counteract line voltage and load changes over long periods of time.

The present schedule calling for 12 testing machines will be changed to increase the number to 16 as rapidly as possible. A central control panel includes 16 recording controllers; a multipoint recorder; a high-precision long-scale indicator for checking up to 56 temperatures, including all those controlled or recorded; vacuum-measuring equipment and controls; and possible future extensometer recorders.

It has been necessary to initiate a development program to provide recording extensometers which are stable for periods up to six months and whose sensitivity is of the order of 10 microinches.

TWO-VARIABLE RECORDER-ALARM SYSTEM

S. A. Hluchan

Both single-channel and 6-channel systems to record two different variables have been designed. Each single-channel system and each channel of the multisystem will receive signals from a pressure transducer and a thermocouple synchronized with the correct measuring circuit.

The pressure transducer signal is received by an accessory unit (Universal Strain Gage Transducer Control — Dwg. Q-902-1*) which incorporates the d-c supply; range, zero, and gauge factor adjustment; and calibration provision. The output signal from this unit is the input signal to the Brown potentiometer.

Three of the single-channel units have been in operation for several months. A double-measuring-circuit pen-dragging Brown potentiometer is equipped with a 40 to 60% cyclic switch to alternate variables. The unit is also supplied with an indicator system consisting of alarms and lights both at the recorder and at a remote location to signal any malfunctioning, required range change, or failure of a-c power.

The multichannel unit will record six temperatures and six pressures alternately on one record. A more complex switching arrangement is required.

REMOTE CHAMBER MONITRONS

J. L. Horton

Single- and multiple-channel remote chamber monitrons have been checked, and extensive design modifications have been made. These are expected to provide a significant improvement in performance. Details will shortly be available in the Instrument Department Service Manual.

* Oak Ridge National Laboratory Instrument Department drawing.

INSTRUMENT CONSTRUCTION AND MAINTENANCE

W. J. Ladniak

The following instruments were built in the Instrument Fabrication Shop for use in research work:

Sigma Amplifiers	3
Electric resistance apparatus	2
High-megohm bridge	1
Fast-neutron counter	1
A-1 amplifiers	8
Single-channel pulse analyzer	1
Sequence controls	2
Strain gauge	1
Electrometers	4
Survey meters (single-range Cutie-Pie)	4
Linear count-rate meters	5
Electronic galvanometer	1
Logarithmic count rate meters	2
Differential discriminator	1
	36

Besides the above work, 33 atomic scalers were rebuilt to provide a good sound scaler for research work. These were rebuilt according to a study made of the scaler circuit by the Instrument Development Section. Also, 68 instruments were built for various jobs throughout the plant.

MONTH	NO. OF INSTRUMENTS SERVICED	NO. OF FAILURES
July	205	432
August	267	655
September	260	667
Total	732	1754

A percentage of instrument failures is as follows:

Transformers replaced	0.79
Number of G-M tubes replaced	9.69
Number of filter condensers replaced	2.91
Number of by-pass condensers replaced	1.88
Number of resistors replaced	2.39
Number of vacuum tubes replaced	25.25
Number of instruments calibrated	3.65
Miscellaneous failures	53.42

RESONANCE ANALYZER

W. G. Stone and T. A. Love

In this system the phase of the driving volume must be within a few degrees of the phase of the signal. For this reason the circuit components of the amplifier become very critical. The necessity of a large dynamic range and a gain of about 10^4 over such a bandwidth makes the calculations very tedious. These calculations have been completed for a nine-stage amplifier, and the construction on it is almost finished. Within the next few days testing of the characteristics of this amplifier will begin, and such modifications as may prove necessary will be made.

The vacuum gauges have been repaired. Our vacuum system will now operate at a pressure of around 2×10^{-7} mm Hg.

4. PHYSICS DIVISION

SPLIT-CRYSTAL SCINTILLATION SPECTROMETER

P. R. Bell R. C. Davis
J. M. Cassidy

After the first good results obtained by B. H. Ketelle in the Chemistry Division, a split-crystal spectrometer was constructed. Anthracene crystals ½ in. thick, 1 in. high, and 1½ in. long were cut from adjacent parts of a larger crystal. The two crystals were placed on their long faces on a standard 1½-in.-diameter by ½-in.-thick light piper so that their largest faces were almost in contact. β-ray samples on very thin foils were placed between the crystals. The light piper was joined to the crystals and 5819 photomultiplier tube with Canada balsam, and the whole crystal assembly was enclosed in an aluminum light-reflector box. With this arrangement all the β rays leaving the source can be counted, and the spectrum measured. Absolute β counting can be done easily with the split-crystal spectrometer, and, by extrapolating the Kurie plot data to zero energy, an accurate value of all the β rays can be obtained with a minimum of assumptions.

The Kurie plots obtained with the split-crystal unit do not show much of the turnup at low electron energies which characterize the single-crystal spectrometer and which would be acceptable on magnetic instruments. Figure 4.1 shows the β spectrum, and Fig. 4.2 the Kurie plot obtained using a P^{32} source, which was thin but was mounted on 100 $\mu g/cm^2$ Formvar-polystyrene film and covered by a similar film. The plot still deviates somewhat at low energies, but at least a part of the deviation is due to the source film. The source can, of course, be evaporated directly on the crystal surface so that no mounting foil is needed.

TOTAL-ABSORPTION SPECTROMETER

Tests of very large crystals as total-absorption scintillation spectrometers have met with some success. A 4-in.-diameter 2-in.-thick NaI-TlI crystal was tested, and the resolution was found to be poor. Its failure was attributed to poor activation, as the pulses are also rather small (20% of the

UNCLASSIFIED
DWG. 9769

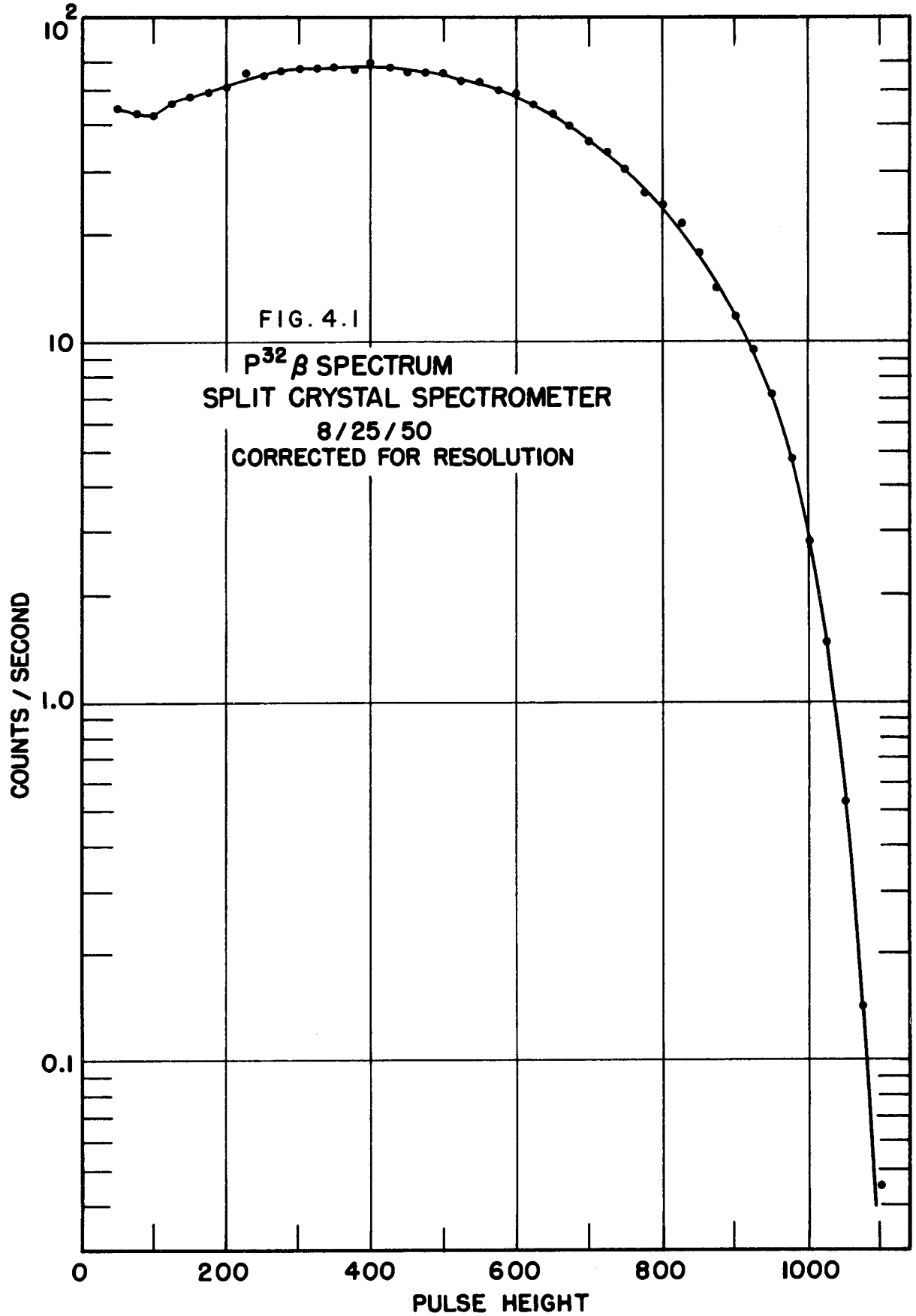

UNCLASSIFIED
DWG. 9770

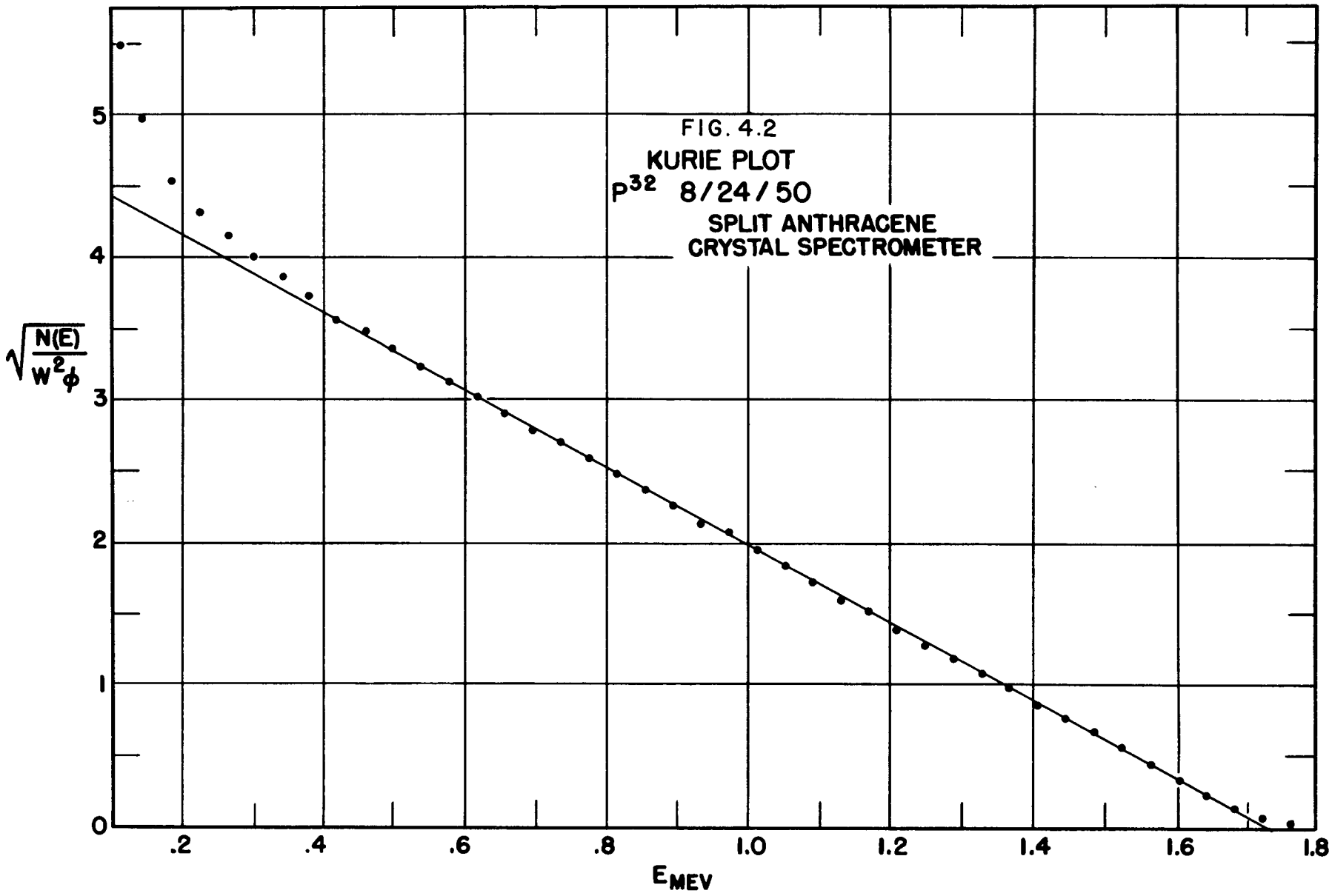

height produced by small crystals). A crystal 3 in. in diameter and 3 in. high gives much better results. A central hole 1¾ in. deep and ½ in. in diameter allows samples to be inserted into the crystal. Figure 4.3 shows the response to the 0.661 Mev γ ray of Cs^{137}. The peak contains six-tenths of all the counts. The resolution is considerably poorer than with the smaller crystals, which will give about 11% width of peak while the 3-in. crystal gives 27%. The resolution improves as the energy increases so that the crystal is adequate for some high-energy work.

To show the use of the total-absorption spectrometer in decay-scheme determination, a sample of Co^{60} was run. Curve A in Fig. 4.4 is for a source inside the crystal, and curve B is for a larger source outside. The two γ rays of Co^{60} at 1.16 and 1.32 Mev are unresolved, but a strong peak at 2.5 Mev can be seen for curve A; there is only a very weak peak due to random coincidences for the outside source. This shows that the two γ rays are in coincidence (an already known fact), since a peak at an energy equal to their sum is seen.

A γ-ray continuum can be analyzed with this crystal, but the resolution is poor.

SINGLE-CHANNEL ANALYZER

J. E. Francis and P. R. Bell

A single-channel analyzer has been built for measuring the pulse spectrum from proportional and scintillation counters; it counts the number of pulses between E and $E + \Delta E$. This analyzer has the advantage of using fewer tubes and components than previous models. It contains a pulse-height-selecting amplifier, followed by two pulse-height selectors, a memory circuit, and an anticoincidence circuit.

A circuit diagram of the analyzer is shown in Fig. 4.5. The pulse-height-selecting amplifier amplifies a segment of the pulse distribution. A Helipot at the beginning of the amplifier determines which segment will be amplified and thus sets the minimum value that a pulse must have to give an output signal. V-1 is a cathode follower whose grid bias can be varied over a range of 100 volts. This allows the d-c level of an input pulse to be varied over

UNCLASSIFIED
DWG. 9768

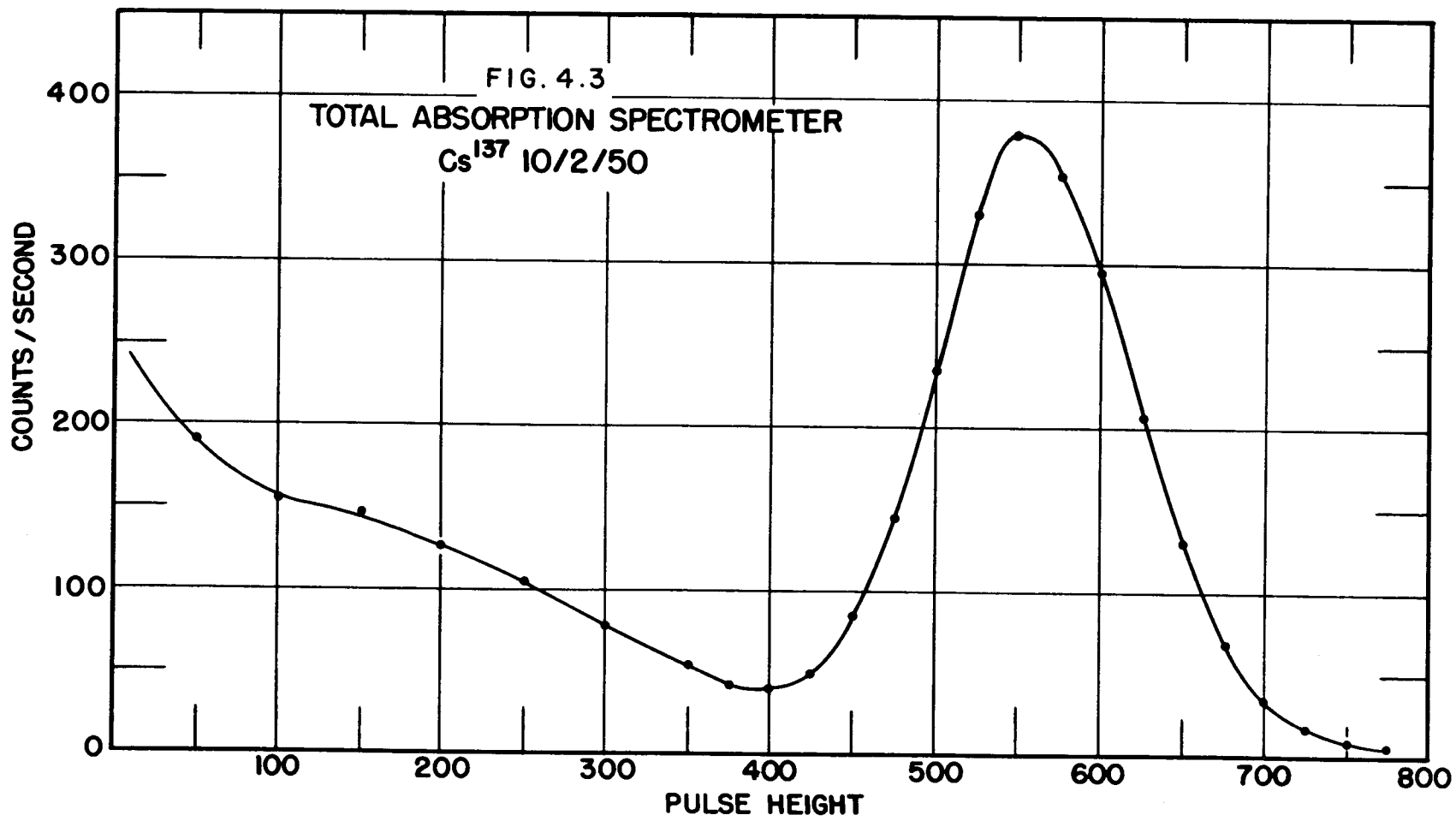

UNCLASSIFIED
DWG. 9808

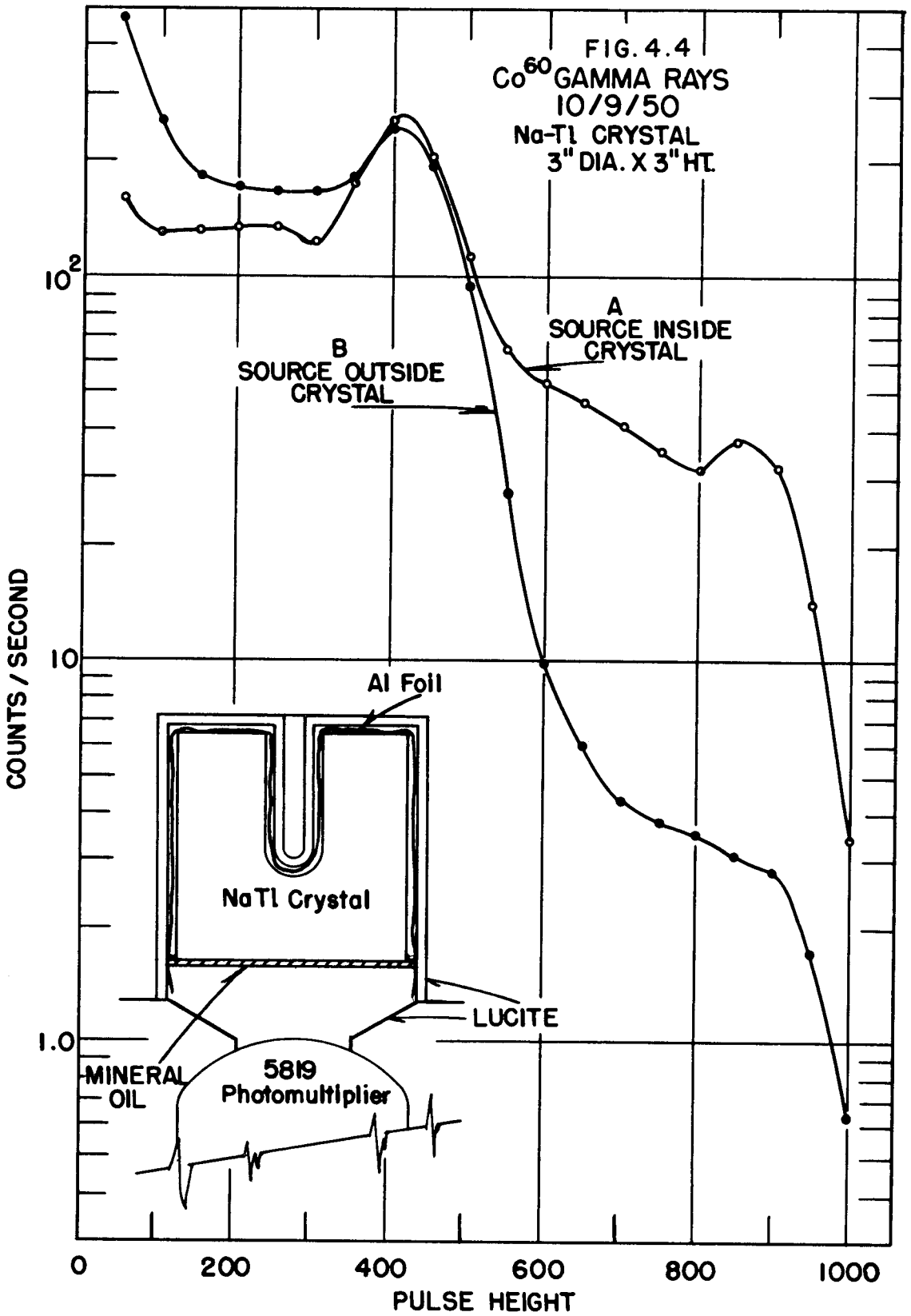

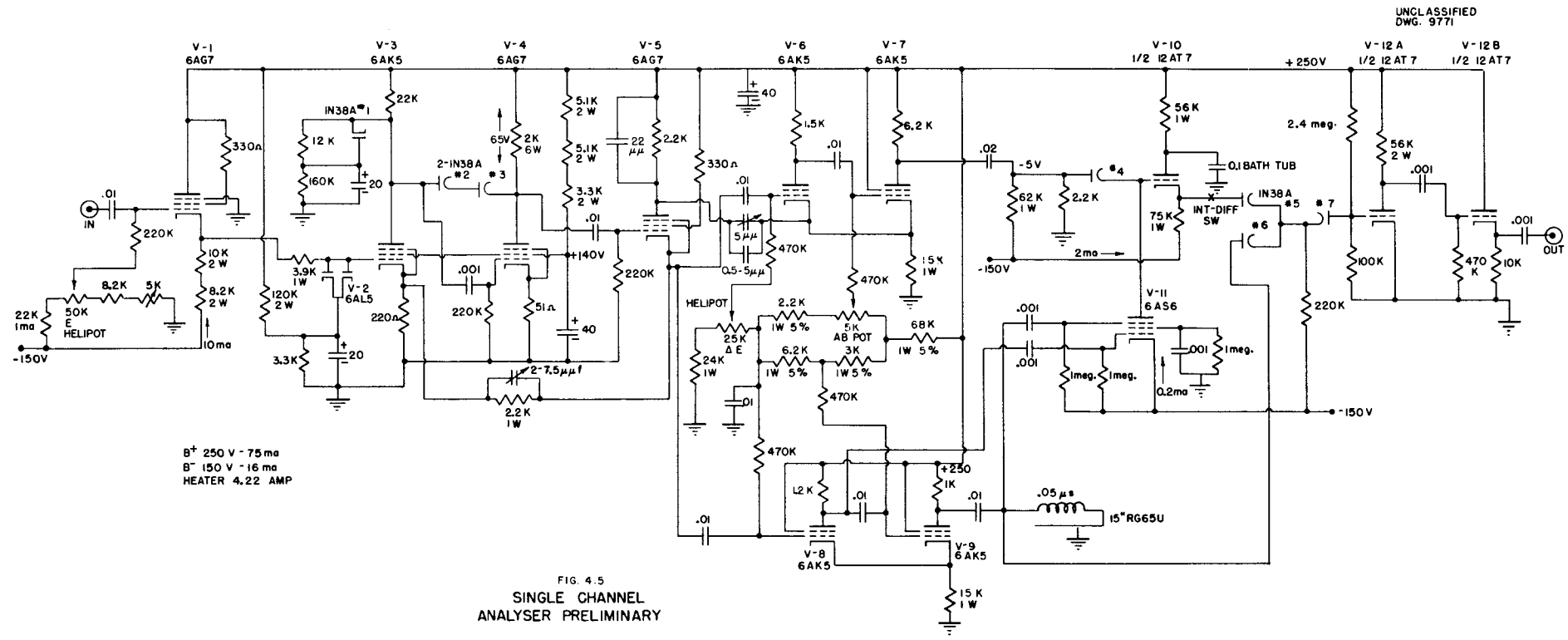

FIG. 4.5
SINGLE CHANNEL
ANALYSER PRELIMINARY

the same range. The signal is fed from the cathode of V-1 to the grid of V-3 through a current-limiting resistor. The grid of V-3 is prevented from going too far in the positive direction by a 6AL5 diode, which starts to conduct after the signal on the grid of V-3 has reached a certain value. The two 1N38A diodes in series between the plates of V-3 and V-4 hold the plate of V-3 constant until V-3 is drawing 2 ma and is on the linear portion of its characteristic. The 1N38A diode in parallel with the 8.2K resistor limits the size of the output from V-3 so that the grid of V-4 is not driven very far in a negative direction. This shortens the recovery time of the grid considerably. Tubes V-3, V-4, V-5, and associated components comprise a conventional feedback loop with a nominal gain of 2000 and a feedback gain of 10 to provide a stabilization factor of 200.

The signal from the amplifier is fed into two pulse-height selectors, the lower of which (V-8, V-9) is a long-tailed pair biased to trigger on very small pulses from the amplifier. An output signal is taken from each plate of the pulse-height selector. The signal from V-8 is used to turn on the memory circuit by turning off V-11. The output signal from V-9 is differentiated by a shorted delay line to obtain two pulses, one which marks the beginning and one which marks the end of the input signal to the lower pulse-height selector. No use is made of the pulse marking the beginning. The pulse marking the end of the input pulse is used to hold the memory circuit on and is also fed to one input of the anticoincidence circuit.

The upper pulse-height selector (V-6, V-7) is similar to the lower one. It is biased to trigger only if the pulse is above a certain value determined by the bias on the grid of V-6. This determines the ΔE or "window width." The output signal from V-7 is fed into the memory circuit.

The memory circuit (V-10, V-11, and 1N38A diode No. 4) provides a signal to one input of the anticoincidence circuit when the upper pulse-height selector triggers. Normally when there is no input to the circuit, the grid of V-10 is held down by current flowing through V-11, the diode, and the 2.2K resistor to ground. When a pulse triggers the lower pulse-height selector, V-11 is cut off and the grid of V-10 stays at approximately the same value. If, however, the upper pulse-height selector triggers, a pulse is placed on the plate of the 1N38A diode. The diode lengthens the pulse and places it on the grid of V-10, which pulls up the plate of 1N38A diode No. 5. The plate of

diode No. 5 will stay up, preventing an output signal from the anticoincidence circuit. It will not come down until after the differentiated pulse from the lower pulse-height selector has disappeared from the grid of V-11. When the grid of V-11 no longer has a signal, V-11 starts to conduct and resets the memory circuit.

Therefore, if the upper pulse-height selector fires, the memory circuit provides a signal to one input of the anticoincidence circuit until after the differentiated pulse from the lower pulse-height selector has entered the second input of the anticoincidence circuit. When only the lower pulse-height selector triggers, there is no coincidence, and there is therefore an output pulse from the cathode of IN38A diode No. 6, which is lengthened by 1N38A diode No. 7 and amplified by V-12A to make a longer and larger pulse. The output pulse from V-12A is fed into V-12B, which is a cathode follower, to get a low impedance output.

The memory circuit is necessary because the pulse which triggers the upper pulse-height selector is of shorter duration and occurs after the pulse has entered the lower pulse-height selector. Without the memory circuit it is possible to get an anticoincidence when actually there is a coincidence.

A switch is placed between the memory circuit and the anticoincidence circuit so that it is possible to get the total number of counts above a certain value.

Preliminary tests indicate that the analyzer works as expected except for effects due to the grid-to-cathode capacity in the first tube of the upper pulse-height selector. Methods of compensating for this effect are now being tried.