UNCLASSIFIED

ORNL 893 Series A
INSTRUMENTATION
8A

MARTIN MARIETTA ENERGY SYSTEMS LIBRARIES
3 4456 0352700 2

A SWEEP TYPE DIFFERENTIAL AND INTEGRAL DISCRIMINATOR

EDWARD FAIRSTEIN

CENTRAL RESEARCH LIBRARY
DOCUMENT COLLECTION
LIBRARY LOAN COPY
DO NOT TRANSFER TO ANOTHER PERSON
If you wish someone else to see this document, send in name with document and the library will arrange a loan.

OAK RIDGE NATIONAL LABORATORY
OPERATED BY
CARBIDE AND CARBON CHEMICALS DIVISION
UNION CARBIDE AND CARBON CORPORATION
UCC
POST OFFICE BOX P
OAK RIDGE, TENNESSEE

UNCLASSIFIED

UNCLASSIFIED

Report Number: ORNL-893

This document consists of 18 pages.

Copy 8 of 202 Series A

Contract No. W-7405, eng 26

CHEMISTRY DIVISION

A SWEEP TYPE DIFFERENTIAL AND INTEGRAL DISCRIMINATOR

Edward Fairstein

Date Issued: FEB 12 1951

OAK RIDGE NATIONAL LABORATORY
operated by
CARBIDE AND CARBON CHEMICALS DIVISION
Union Carbide and Carbon Corporation
Post Office Box P
Oak Ridge, Tennessee

UNCLASSIFIED

MARTIN MARIETTA ENERGY SYSTEMS LIBRARIES

3 4456 0352700 2

ORNL-893
Instrumentation

INTERNAL DISTRIBUTION

1	G. T. Felbeck (C&CCD)	18	A. M. Weinberg	30	J. A. Wethington
2-3	Chemistry Library	19	J. A. Swartout	31	M. J. Skinner
4	Physics Library	20	E. D. Shipley	32	C. J. Borkowski
5	Biology Library	21	E. J. Murphy	33	Edward Fairstein
6	Health Physics Library	22	E. H. Taylor	34	W. H. Jordan
7	Metallurgy Library	23	A. H. Snell	35	P. R. Bell
8-9	Training School Library	24	A. Hollaender	36	J. V. Francis
10-13	Central Files	25	F. C. VonderLage	37	G. G. Kelly
14	C. E. Center	26	K. Z. Morgan	38	Ralph Brosi
15	C. E. Larson	27	M. T. Kelley	39	George Boyd
16	W. B. Humes (K-25)	28	W. H. Pennington	40	E. C. Campbell
17	W. D. Lavers (Y-12)	29	D. W. Cardwell	41-44	Central Files (O.P.)

EXTERNAL DISTRIBUTION

45-52	Argonne National Laboratory
53	Armed Forces Special Weapons Project
54-56	Atomic Energy Commission, Washington
57	Battelle Memorial Institute
58	Brush Beryllium Company
59-62	Brookhaven National Laboratory
63	Bureau of Medicine and Surgery
64	Bureau of Ships
65-68	Carbide and Carbon Chemicals Division (K-25 Plant)
69	Columbia University (J. R. Dunning)
70	Columbia University (G. Failla)
71	Dow Chemical Company
72-76	E. I. duPont deNemours and Company
77-82	General Electric, Richland
83-86	Idaho Operations Office
87-88	Iowa State College
89	Kansas City Operations Branch
90	Kellex Corporation
91	Kirtland Air Force Base
92-95	Knolls Atomic Power Laboratory
96-98	Los Alamos Scientific Laboratory
99	Mallinckrodt Chemical Works
100	Massachusetts Institute of Technology (A. Gaudin)
101	Massachusetts Institute of Technology (A. R. Kaufmann)
102-104	Mound Laboratory
105	National Advisory Committee for Aeronautics
106	National Bureau of Standards (R. D. Huntoon)
107	Naval Medical Research Institute
108-109	Naval Radiological Defense Laboratory
110	New Brunswich Laboratory
111-113	New York Operations Office
114-115	North American Aviation, Inc.
116-119	Carbide and Carbon Chemicals Division (Y-12)

120 Patent Branch, Washington
121 RAND Corporation
122 Sandia Corporation
123 Santa Fe Operations Office
124-138 Technical Information Service, Oak Ridge
139-140 USAF, NEPA Office
141-142 U. S. Geological Survey (T. B. Nolan)
143-144 U. S. Public Health Service
145 University of California at Los Angeles
146-148 University of California Radiation Laboratory
149-150 University of Rochester
151 University of Washington
152 U. S. Atomic Energy Commission (Wilmington)
153 Western Reserve University
154-157 Westinghouse Electric Corporation
158-161 Atomic Energy Project, Chalk River
162 Chief of Naval Research
163 H. K. Ferguson Company
164 Harshaw Chemical Corporation
165 Isotopes Division (Mr. McCormick)
166-167 Library of Congress, Acquisition Department (J. W. Cormn)
168 National Bureau of Standards (Library)
169 National Research Council, Ottawa
170 Naval Research Laboratory
171 Nevis Cyclotron Laboratories
172 Nucleonics
173-174 Oak Ridge Institute of Nuclear Studies
175-184 United Kingdom Scientific Mission (M. Greenhill)
185 USAF, Air Surgeon (Col. A. P. Gagge)
186 USAF, Eglin Air Force Base (Technical Library)
187 USAF, Wright-Patterson Air Force Base (Rodney Nudenberg)
188-192 USAF, Wright-Patterson Air Force Base (CADO)
193 U. S. Army, Army Field Forces (Captain James Kerr)
194 U. S. Army, Army Medical Service Graduate School (Col. W. S. Stone)
195 U. S. Army, Atomic Energy Branch (Lt. Col. A. W. Betts)
196 U. S. Army, Director of Operations Research (Dr. Ellis Johnson)
197-198 U. S. Army, Office of the Chief Signal Officer (Curtis T. Clayton thru Major George C. Hunt)
199 U. S. Army, Technical Command (Col. J. H. Rothschild Attn: Technical Library)
202 UT-AEC Agricultural Research Program (Charles S. Hobbs)

A SWEEP TYPE DIFFERENTIAL AND INTEGRAL DISCRIMINATOR[1]

Edward Fairstein

Chemistry Division
Oak Ridge National Laboratory
Oak Ridge, Tennessee

Abstract

A circuit is described which can be used for obtaining the pulse height distributions from scintillation counters, proportional counters, parallel-plate counters, and other voltage pulse sources. Differential or integral curves can be plotted automatically[2,3] by the attachment of an electronic recorder, or can be obtained manually with the use of the built-in rate meter or an external scaler. The counting rate loss is approximately one percent per 100,000 counts per minute. The overall drift in pulse-height setting, slit-width, and counting rate zero is less than one percent per 24 hours. It will operate from any positive output amplifier whose rise time is 0.1 microseconds or greater, and whose output is limited to 100 volts.

Introduction

The circuit to be described represents the latest version of a discriminator which has been in use at this Laboratory for over a year. During this period it has proved to be trouble-free, versatile, and easily operated.

1 This document is based on work performed for the Atomic Energy Commission at Oak Ridge National Laboratory.

2 J. H. Parsons, "A Sweep Type Alpha Energy Analyser", Report No. MonC-416, Oak Ridge, Tennessee (1947).

3 J. H. Parsons, Proc. I.R.E. 37,564 (1949).

With the addition of a linear amplifier and an appropriate detector, it can be used to obtain alpha, beta, x-ray and gamma energy distributions, between the limits of approximately 10^2 and 10^6 counts per minute.

The Circuit

In general terms, the circuit consists of an upper and lower gate, an anti-coincidence circuit, and a rate meter. Pulses with peak amplitudes sufficient to trigger the lower gate, but not the upper, will be recorded by the rate meter. Pulses big enough to trigger both gates are rejected by the anti-coincidence circuit. The separation of the two gates constitutes the slit-width. In this instrument, the slit-width is continuously adjustable from zero to 10 volts. The position of the lower edge of the slit is continuously adjustable from zero to 100 volts. Scanning adjustments are provided which make it possible to expand portions of this range at will. The rate meter circuit has been provided with a very large range of adjustment . Time constants between 0.1 seconds and 2000 seconds are possible, and the sensitivity is continuously adjustable over a range of 250,000.

A more detailed explanation of the circuit follows:

T_1 through T_4 are the pulse-height selecting amplifier tubes.[4] These are placed ahead of the actual gate circuits to improve the stability and increase the circuit speed. No signal is passed by T_1 through T_4 until the pulse height from the amplifier exceeds the cutoff bias applied to the input grids. T_3 and T_4 will pass a signal at a lower level than T_1 and T_2. The difference in levels, which is adjustable by means of a calibrated con-

[4] W. H. Jordan and P. R. Bell, Rev. Sci. Inst. 18,703 (1947).

trol, constitutes the slit-width. The stability with which the slit can be maintained over long periods of time depends almost entirely upon the stability of these four tubes. The circuit is such that drifts are compensated for, if the tubes have matched characteristics. A conventional tube tester will provide a sufficiently accurate measurement. The match between corresponding tubes of the upper and the lower channels is more important than the match between tubes in the same channel.

T_6 through T_9 are the gate tubes. These produce constant height, flat-topped pulses when actuated by the signals from the pulse height selectors. The width of the pulses depends upon the width of the trigger pulses; for stability, however, the hysteresis has been adjusted for a minimum output pulse-width of 1.5 microseconds.

In order to record only those pulses whose amplitudes fall within the slit, an anti-coincidence circuit is necessary. The circuit is built around T_{11}. T_{11a} is normally conducting while T_{11b} is normally non-conducting. When T_{11b} receives a positive pulse, a signal is passed on to the rate meter. If at the same time T_{11a} receives a positive pulse which is on for at least the duration of the pulse at T_{11b}, no signal will be transmitted to the rate meter. This is because the inhibiting signal keeps T_{11b} in a non-conducting state by virtue of the common cathode coupling.

Because of the finite rise and fall time of the signal from the amplifier, the lower trigger pair is always triggered before the upper, and the upper is always restored to its ground state before the lower. For the anti-coincidence circuit to be effective, it is necessary to delay the signal from the lower pair until the upper pair is triggered, and to store the signal

from the upper pair until the lower pair has recovered. The most effective way of accomplishing the delay is to use the tail end of the lower channel pulse[5,6]. This method makes the operation of the circuit independent of the incident pulse-width. A length of short-circuited RG-65U delay cable differentiates the signal, producing a positive pip at the leading edge and a negative pip at the trailing edge. These pips, which are about 0.15 microseconds wide are amplified and inverted by T_{12}. The positive pip now follows the negative one and is effective in actuating T_{11b} in the absence of an inhibiting pulse.

T_{10}, T_{13}, and the 10 mmf capacitor (plus the parasitic capacitances) constitute the storage circuit. T_{13} is a phase inverter and mixer. As soon as the lower pair is triggered, a negative signal appears at the plate of T_{13}. This signal is maintained until the lower trigger pair is restored to its ground state, and then is maintained a short time longer by the signal stored in the delay cable.

T_{10a} is a cathode follower whose load is the 10 mmf capacitor and the clamp T_{10b}. The negative signal from T_{13} opens the clamp, permitting the signal from the upper trigger pair to charge the circuit capacitance, when and if it arrives. This charge, which constitutes the inhibiting signal for T_{11}, is stored until the clamp is turned on again by the relaxation of the signal from T_{13}.

The diode restorer in the grid of T_{11a} prevents a shift in bias with high counting rates and is necessary for proper operation of the circuit.

[5] P. R. Bell, Private Communication

[6] W. C. Elmore and M. Sands, "Electronics", (National Nuclear Energy Series, McGraw Hill) 1 , page 238 (1949).

T_{14} is a univibrator pulse shaper. It produces an 80 volt positive pulse whose width is adjustable between one and 10 microseconds.

T_{15} is a cathode-follower impedance transformer which is used to drive the rate meter circuit. Placing a cathode-follower between the pulse shaper and rate meter increases the rate meter sensitivity by a factor of 100 without an increase in dead time.

The rate meter, T_{16} and T_{17}, is a conventional one.[7] A grid current adjustment in the vtvm circuit has been provided to adjust the bias on the tubes to the point where the positive and negative grid current components cancel each other. This adjustment is necessary because of the high resistances used in the circuit. Under the proper condition of adjustment, there will be no drift of the meter when the R control is open circuited and the rate meter switch is turned on. The C control should be set to zero for this test. Unless T_{16} has extremely low heater to cathode leakage, it will be impossible to get a proper zero grid current adjustment. Usually, only one out of four tubes can meet the requirements.

The full scale sensitivity is proportional to the product of R and ΔQ. A fine adjustment is also provided in the vtvm circuit.

The capacitors in the control circuit must have low dielectric hysteresis. The ordinary paper capacitor does not meet this requirement. The Vitamin Q capacitors manufactured by Sprague are satisfactory, as are the metallized paper capacitors manufactured by Tobe-Deutschmann. A working voltage of 100 is satisfactory. This rating also results in a desirably small physical size.

[7] Ibid, page 250.

To plot curves automatically, an external motor driven pulse-height selector control must be used in conjunction with an electronic recorder whose full scale sensitivity is 10 millivolts. A convenient combination of the two elements may be effected by mechanically coupling the pulse-height selector control to the recorder chart drive. A 355°, 50,000 ohm potentiometer capable of continuous rotation, and with a linearity of 0.5% or better can be obtained from at least three manufacturers.

The output of the automatic shutoff circuit can be used to shut the recorder off at any desired pulse-height sett[illegible]. [illegible]s dial can be made to track with the pulse-height selector dial by properly setting the scan and zero adjustments.

Application: The discriminator will operate from the output of any linear pulse amplifier which produces a maximum positive pulse output of 100 volts. It has been used successfully with pulse widths varying from 0.4 microseconds to 50 microseconds. If delay line differentiation is used to shape the pulses, widths as narrow as 0.25 microseconds should operate the instrument satisfactorily.

The dead time of the gate circuits is about two microseconds. The dead time of the rate meter circuit is usually adjusted to about 10 microseconds. When used as a differential discriminator, the overall dead time is essentially that of the gate circuits, since in normal operation less than 10 percent of the total counts fall within the slit and are effective in actuating the rate meter. If a Brown recorder is used with the instrument, it is desirable to remove the fifty mf capacitor in its amplifier input circuit. The high internal impedance of the vtvm causes sluggish operation if this is not done.

If accurate energy determinations are to be made with the instrument, it is necessary to determine the true zero on the energy axis. This can be done with the use of a stable pulse-generator and an accurately calibrated attenuator. The extrapolation of the line connecting a series of calibration points will indicate the position of the zero. The indicated zero can be made to coincide with the true zero by properly setting the zero adjustment. The scan adjustment should be set to produce exactly 100 volts across the pulse-height selector control when the scanning controls are set for zero baseline and 100 volts scanning range. Under these conditions, the dial reads directly in volts. After all adjustments are properly made, a correction for the finite slit-width must be made when actually determining a pulse height distribution. The true zero shifts in the negative direction by an amount equal to one-half the slit-width. It has been a practice at this Laboratory to substitute a precision 50,000 ohms-per-volt meter for the internal voltmeter when the measurements warrant it.

If T_1 through T_4 are matched to within ten micromhos, the drift in the slit for 100 hours of operation is about five millivolts. Since a one volt slit is usually used, this amounts to less than a one percent drift, which is negligible for most applications. Presumably, the drift can be further reduced by matching the tubes still more carefully.

At this Laboratory, the instrument is powered by a regulated power line. If the instrument must be operated from an unregulated line, the heater voltage of T_1 through T_4 should be stabilized.

Because of the nature of the input circuit, the readings obtained for pulse heights below 12 volts are unreliable if the counting rate exceeds about 10,000 cpm. This region can be explored by increasing the amplifier gain by a known amount, bringing the lower voltage pulses into a region where they may be accurately measured. When this method is used, the amplifier must be of capable of overloading "gracefully" on the higher amplitude pulses. It is possible to lower the 12 volt limit considerably by increasing the sensitivity of the gate circuits, T_6 through T_9. This can be done by decreasing the value of the 6.8 K bias resistor in these circuits. The decrease must not be such as to cause spontaneous triggering, however.

Since the driving signal is often assymetrical with respect to the baseline, a charge will be built up on the input coupling condenser which is proportional to the counting rate. A pulse-height selector calibration error will be caused by the shift in bias which results. The error can usually be made negligible for rates below 50,000 per minute. The correction can be determined with the use of a pulse generator. The error can be eliminated by insuring that the areas of the positive and negative portions of the voltage pulses are equal, where it is possible to do so. The use of a diode restorer at the input is to be avoided.[8] Large bias shifts can be caused by the rectification of noise and/or overshoots.

[8] W. H. Jordon, Private Communication.

Results

Figure 2 is a plot of the energy distribution of a sample composed of a mixture of five alpha emitters. A parallel plate chamber using a Frisch grid[9] was the detector. A feedback amplifier was used whose rise and fall times were 7 and 20 microseconds, respectively. The energies listed on the chart are those corresponding to the most probable values for this particular curve.[10]

Under normal operating conditions, the resolution of the complete instrument is less than 50 kev. (full peak-width at one-half maximum amplitude) for a five mev alpha emitter. Under no condition of operation does the discriminator itself contribute to the peak spread.

Figure 3 shows a 4.0 kev photoelectric and a 6.9 kev photoelectric plus Auger electron peak produced in argon by the cobalt x-rays from K-capture in Ni^{59}. The detector in this case was an argon-methane filled proportional counter spectrometer[11,12,13] with cylindrical geometry. The amplifier used had a rise and fall time of 0.7 and 4 microseconds respectively. The resolution in this case was limited by the statistical nature of the ionization and amplification process in the filling gas, rather than by the electronic equipment.

[9] Buneman, Cranshaw, and Harvey, "The Use of Grid Chambers for Alpha-Ray Analysis", Report No. CRP-247, Montreal, P.Q. (1946).

[10] G. T. Seaborg and I. Perlman, Rev. Mod. Phys. 20,285(1948).

[11] C. J. Borkowski and E. Fairstein, Bull. Am. Phys. Soc. 24,27(1949).

[12] Curran, Angus, and Cockraft, Nature 162,302(1948).

[13] Kirkwood, Pontecorvo, and Hanna, Phys. Rev. 74,497(1948).

Ackowledgements

The author wishes to thank C. J. Borkowski for his many helpful suggestions and criticisms, P. R. Bell for his stimulating discussions of the general problems of pulse height analysis, and J. D. Eddlemon for his construction of the prototype model.

Captions

Figure 1. Sweep Type Differential and Integral Discriminator.

All resistances are in ohms and are 0.5 watt carbon unless otherwise specified. Capacitors are in both mmf and mf. The proper multiplier is obvious from the circuit. Ceramic disc types are used where possible.

Figure 2. Pulse Height Distribution of Five Alpha Emitters.

A 0.1 volt slit was used, with a time constant of 200 seconds and a scanning time of four hours.

Figure 3. X-ray Peaks from Ni^{59}.

A 1.0 volt slit was used with a time constant of 10 seconds and a scanning time of 30 minutes.

Figure 4. Front View of the Differential Discriminator.

NOT CLASSIFIED
DWG. 10056

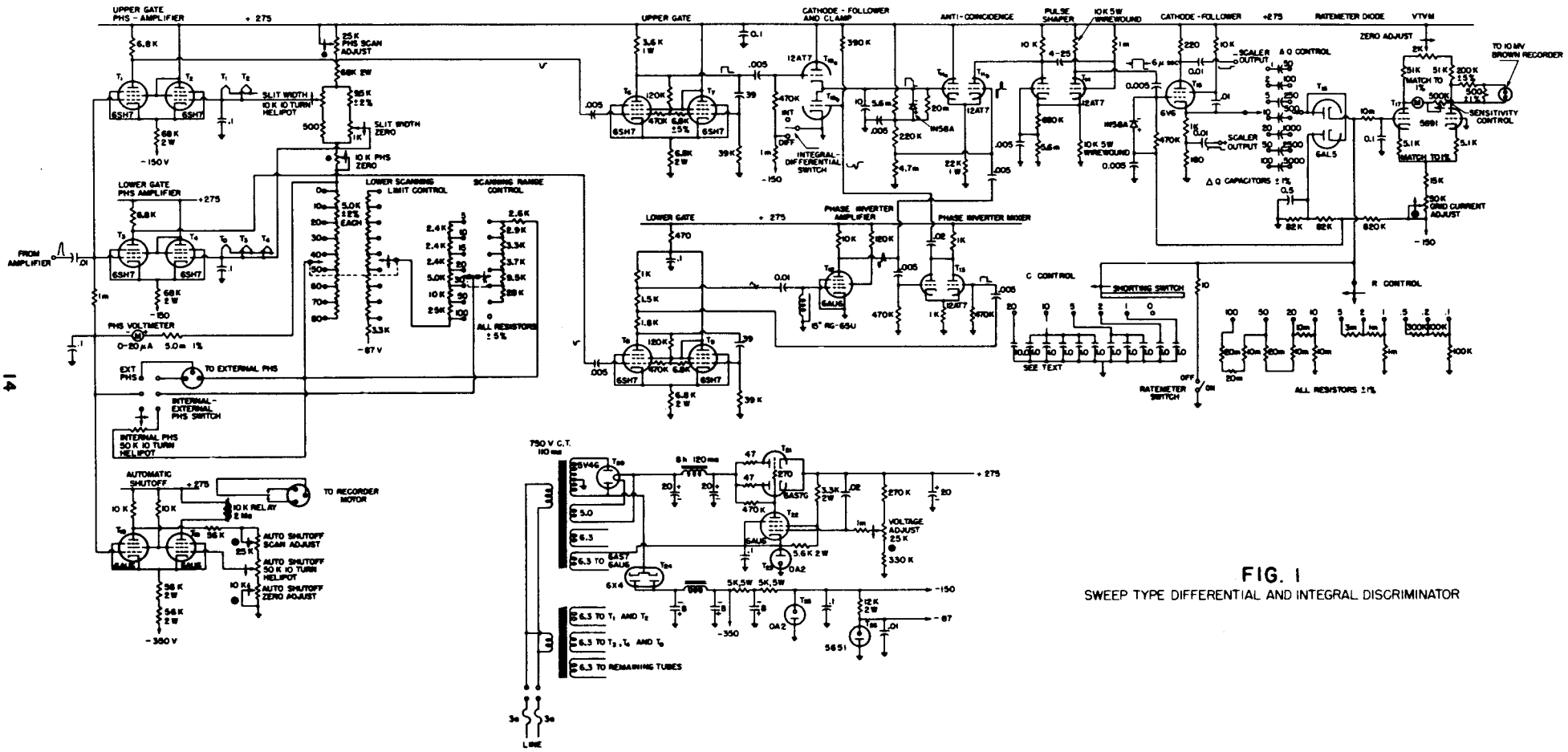

FIG. 1
SWEEP TYPE DIFFERENTIAL AND INTEGRAL DISCRIMINATOR

NOT CLASSIFIED
DWG. 10055

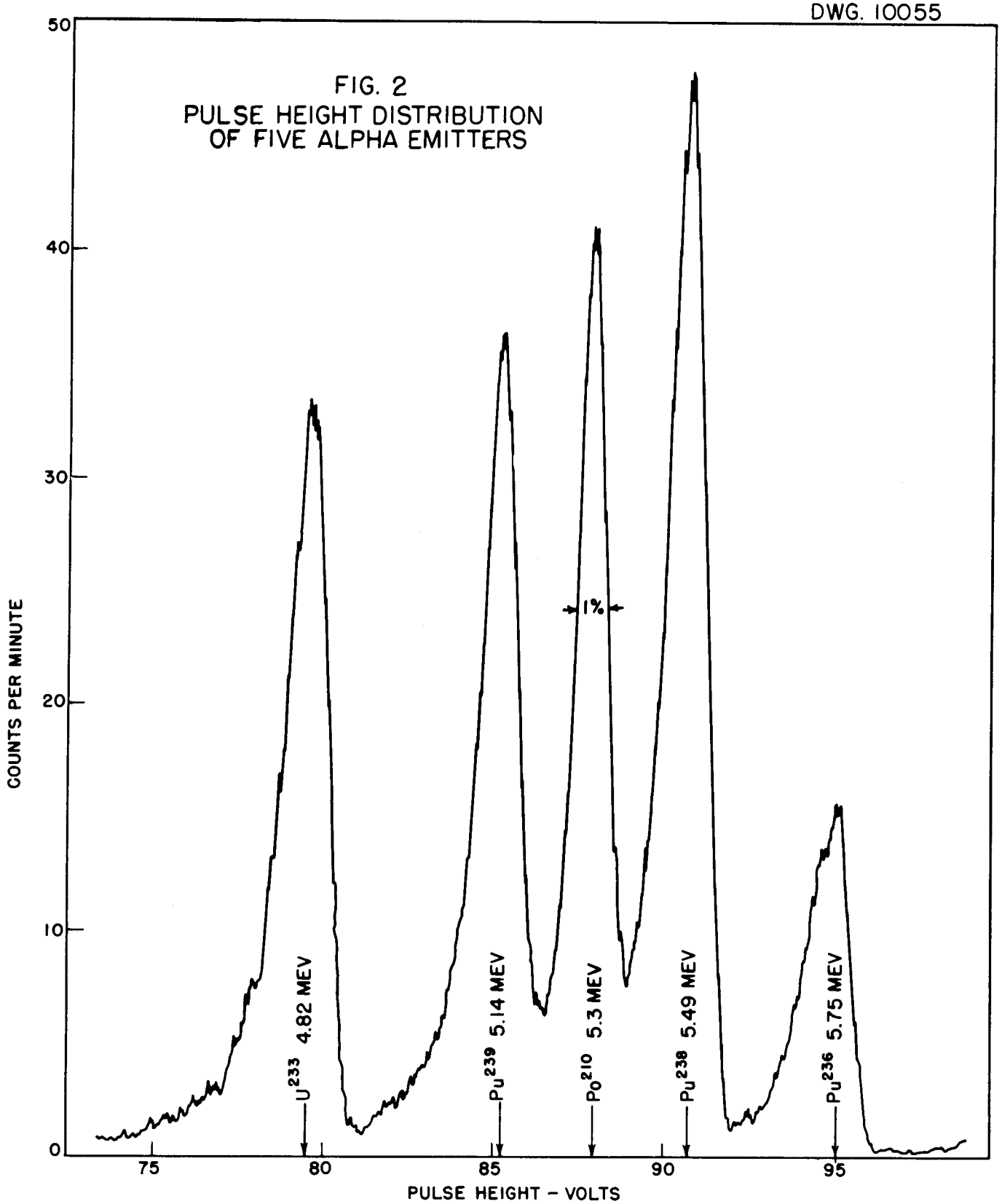

NOT CLASSIFIED
DWG. 7815

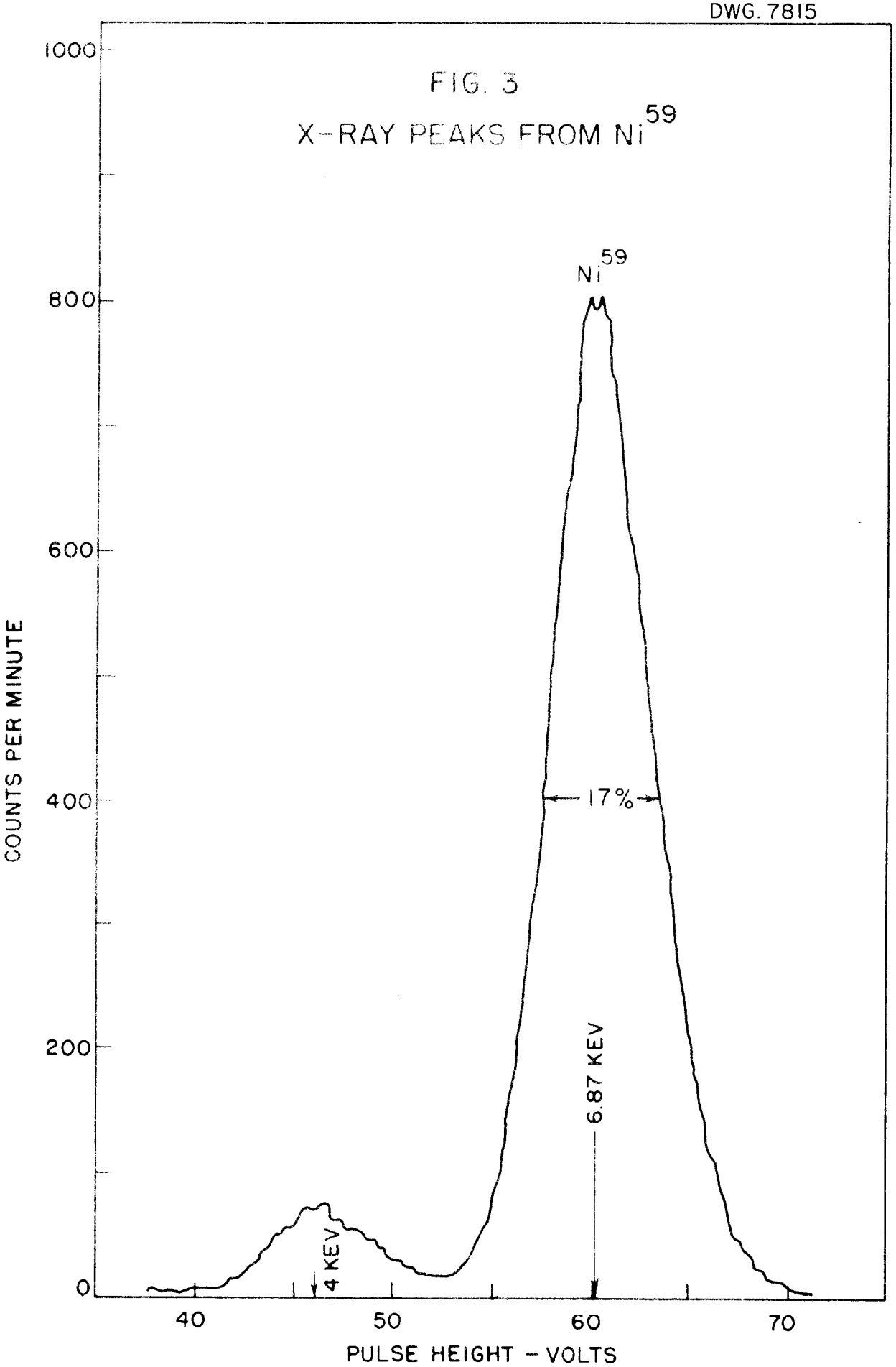

NOT CLASSIFIED
PHOTO 6400

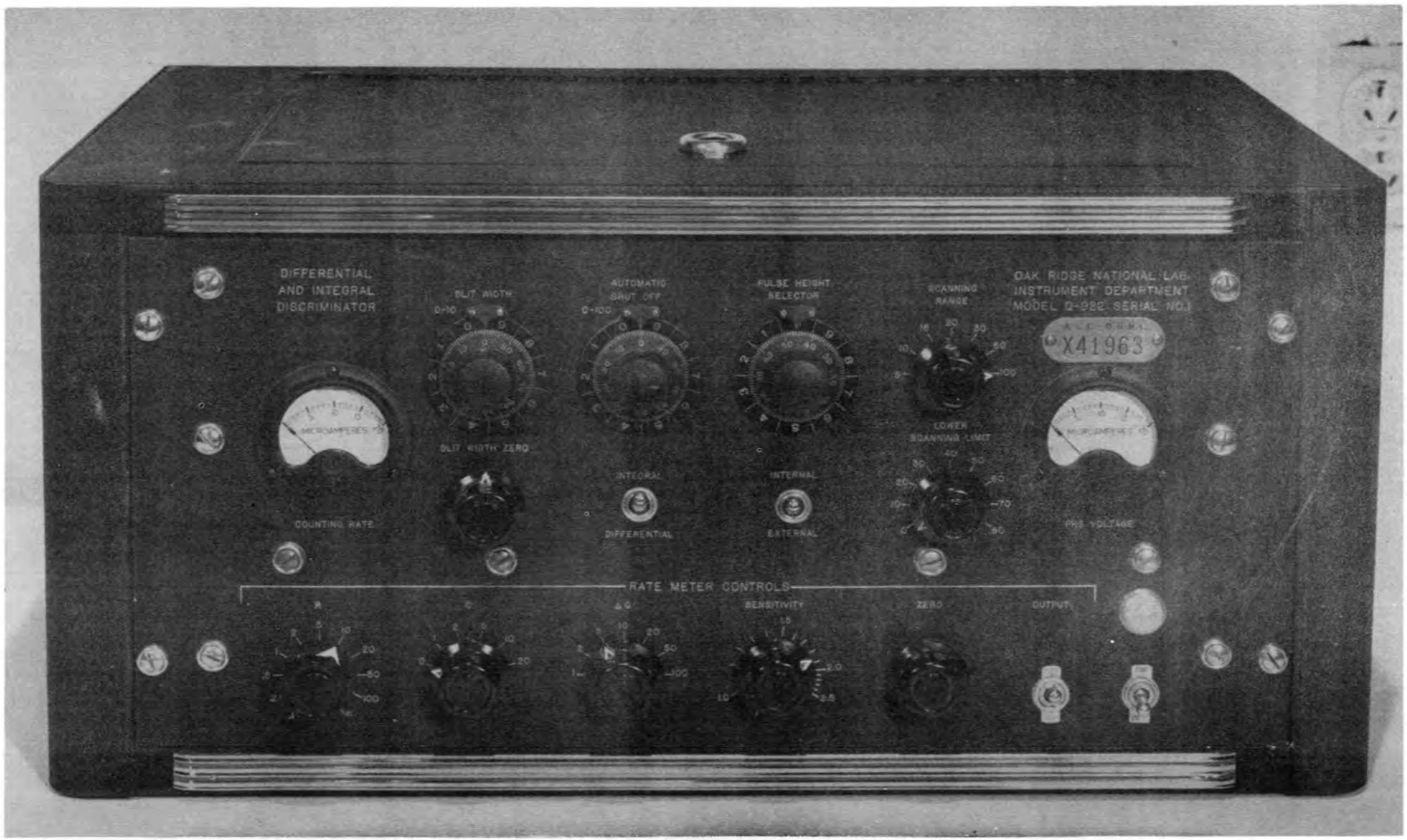

FIG. 4
FRONT VIEW OF THE DIFFERENTIAL DISCRIMINATOR