[redacted]

CENTRAL RESEARCH LIBRARY
DOCUMENT COLLECTION

ORNL 923
Series A
Instrumentation

MARTIN MARIETTA ENERGY SYSTEMS LIBRARIES
3 4456 0352738 8

DECLASSIFIED

CLASSIFICATION CHANGED TO:
BY AUTHORITY OF: TID-1113 10/24/56
BY: N Johnstone

LABORATORY RECORDS
1954

CALORIMETRIC CALIBRATION OF A GRAPHITE WALLED, CAVITY-TYPE IONIZATION CHAMBER

G.H.JENKS, W.M.BREAZEALE, J.J.HAIRSTON

OAK RIDGE NATIONAL LABORATORY
CENTRAL RESEARCH LIBRARY
CIRCULATION SECTION
4500N ROOM 175
LIBRARY LOAN COPY
DO NOT TRANSFER TO ANOTHER PERSON
If you wish someone else to see this report, send in name with report and the library will arrange a loan.
UCN-7969 (3 9-77)

OAK RIDGE NATIONAL LABORATORY
OPERATED BY
CARBIDE AND CARBON CHEMICALS DIVISION
UNION CARBIDE AND CARBON CORPORATION
UCC
POST OFFICE BOX P
OAK RIDGE, TENNESSEE

[redacted]

[redacted]

ORNL 923

"This document consists of 28 pages.
No. 8 of 147 copies, Series A"

Contract No. W-7405, eng 26

CHEMISTRY DIVISION

CALORIMETRIC CALIBRATION OF A GRAPHITE WALLED, CAVITY-TYPE IONIZATION CHAMBER

G. H. Jenks
W. M. Breazeale
J. J. Hairston

Date Issued

JAN 23 1951

OAK RIDGE NATIONAL LABORATORY
operated by
CARBIDE AND CARBON CHEMICALS DIVISION
Union Carbide and Carbon Corporation
Post Office Box P
Oak Ridge, Tennessee

MARTIN MARIETTA ENERGY SYSTEMS LIBRARIES
3 4456 0352738 8

[redacted]

[redacted]

[redacted]

CONFIDENTIAL

ABSTRACT

Cavity type ionization chambers with graphite walls are used to measure the heat dissipation in the graphite reflector of the MTR mock-up.

Because of the importance of these measurements with regard to the final design of the MTR reactor, accurate knowledge of the reliability of the heating values computed from the chamber measurements was desired. A study of the relationship between the ionization occurring in the chamber and the heat generated in the surrounding graphite medium has been carried out and is reported here.

The study consisted essentially of comparisons between calorimetric measurements of the heat generated in graphite placed at a chosen position in the X-pile and ionization chamber measurement carried out at a comparable position. In additional measurements made with a high intensity cobalt-60 source, the relative effective energies required to form ion pairs in various gases admitted separately to the ionization chamber were determined. The latter measurements made possible a comparison between the calorimetric measurements carried out in this work and the calorimetric measurements which have been carried out with the cobalt source by others. A comparison of the results with the best values for the average energy expended in ion pair formation in air and in CO_2 indicates that the chamber is about 97% efficient. This efficiency is based on our best estimate of the effective volume of the chamber.

RESTRICTED DATA

This document contains restricted data as defined in the Atomic Energy Act of 1946.

CAUTION

This document contains information affecting the National Defense of the United States. Its transmission or the disclosure of its contents in any manner to an unauthorized person is prohibited and may result in severe criminal sanctions under applicable Federal laws.

CONFIDENTIAL

INTRODUCTION

Ionization chambers have been used extensively for some time in measuring the quantity of gamma energy absorbed in various materials under irradiation. That the method is capable of rendering accurate results has been shown theoretically by Gray.[1] His treatment has been summarized by Kaye et al.[2] as follows:

"(1) The introduction of a small gas cavity into a solid or liquid medium does not disturb the number, speed and direction of electrons crossing the surface which has become the wall of cavity. This is true only if the dimensions of the cavity are small compared with the range of the electrons.

(2) The cavity must be situated at a depth in the medium not less than the maximum range of the secondary electrons in the medium.

(3) The energy lost by the electrons in the gas cavity (or the ionization produced in the gas cavity) is related to the energy which they would have lost if they had traversed the same volume of the solid or liquid medium, in the ratio of the rates at which the secondary electrons lose energy in the gas and in the medium. If this ratio is ρ, then the energy E_γ absorbed per unit volume of the medium is given by

$$E_\gamma = \rho \epsilon J_\gamma$$

where ϵ = energy required to form an ion pair and J_γ = ionization per unit volume of the gas cavity.

(4) The electronic stopping power of a given medium relative to a gas is a slowly varying function of the atomic number of the gas and is practically independent of the speed of the electrons. It is assumed that ϵ for a gas has the same value for electrons having energies between one Kev and one Mev.

(5) The equation $E_\gamma = \rho \epsilon J_\gamma$ implies that the ionization per unit volume of a cavity should be independent of the size of the cavity. But generally the equation is true only if, as assumed in (1), the dimensions of the cavity are small compared with the range of the electrons. If, however, the mean atomic number of the gas is adjusted to be equal to that of the medium, the secondary emission from the walls of the gas cavity should be the same, apart from the density factor, as that from the gas and therefore the ionization per unit volume should be absolutely independent of the size of the cavity.

(6) The energy absorbed per unit volume may be determined with an accuracy of about 5% by the measurement of the ionization in a small gas filled cavity introduced into the medium at the point under consideration".

In actual practice questions arise as to the validity of the method for several reasons: (1) A small uncertainty exists in the values for the average amount of energy required for ion pair formation in a given gas at given electron energies, (2) The efficiency with which ions are collected in the chamber may be uncertain, and (3) Special conditions of measurement such as the presence of fast or slow neutrons along with the gamma radiations may complicate interpretation of the results.

Ionization chambers used in chain reacting piles are of course subject to all three uncertainties, and some varying results have been encountered in this usage. The monitoring of gamma fluxes in piles is, however, an important application of the ionization chamber and a graphite walled chamber is used to determine the heat produced by gamma ray absorption in the graphite of the MTR mock-up. The information obtained from measurements in the mock-up will be used to predict the heat dissipation in the graphite reflector surrounding the Materials Testing Reactor and is of such importance that independent confirmation of the heating as computed from ionization chamber measurements was greatly desired. To furnish such a confirmation we have carried out a study of the relationship between the ionization chamber readings resulting when the chamber is placed in a graphite medium in which pile radiations are being absorbed and the quantity of heat generated in the medium by absorption of the radiation. Calorimetric methods were used to determine the heat.

METHOD

The method of studying the ionization chamber was essentially as follows: A calorimeter containing graphite was placed in hole 12 of the X-pile, and measurements of the heat generated in the graphite by absorption of pile radiations were carried out. The calorimeter was then replaced with a CO_2-filled ionization chamber the surroundings of which closely reproduced those of the calorimeter, and measurements made with the chamber. The results of the measurements were then compared. In subsequent measurements in the pile, the ionization chamber readings given by air filled and helium filled chambers were compared to the readings given by the CO_2 filled chamber.

In planning the study, consideration was first given to carrying out the measurements in the graphite reflector of the mock-up. However, the experimental facilities available for calorimetry at the mock-up were poor, and the low power at which the mock-up was operated would have necessitated the use of delicate micro calorimetric techniques. In addition, the fact that corrections would have to be applied to the measurements because of neutron and gamma-ray absorption in the materials of the calorimeter removed any advantage which measurements at this site might have over measurements in the pile in Building 105. The gamma-ray fluxes in the latter pile are 10 to 100 times greater than those in the MTR mock-up so that the calorimetry could be relatively straight forward.

Hole 12 enters the pile vertically and is equipped with an aluminum jacket through which water at a given temperature can be circulated giving a constant temperature in the hole. The position in the hole at which the comparisons were made was 7'6" below the top of the concrete shield, i.e., just above the top of the pile graphite and in the region of the 10" air gap which separates the top of the graphite from the concrete shield. During measurements, the space in the hole directly below the instruments was filled with a graphite cylinder 24" in length. Thus the nearest pile metal was separated from the calorimeter and chamber by 30" of graphite. Preliminary measurements of the slow neutron flux, the cadmium ratio and the change in the ionization chamber readings with displacement along the axis of the tube established the operating conditions prevailing at the chosen position.

In addition to the comparative measurements in the pile, a study of the performance of the ionization chamber when irradiated by γ rays only was also carried out. The source used in this study was the 300 curie cobalt-60 source prepared by Hochanadel and Ghormley for radiation chemistry measurements. It is made up of a number of cobalt pellets placed symmetrically aroung the surface of a brass cylinder 10 cm in length and about 4 cm in diameter. The space within the cylinder may be used for irradiations, and the gamma ray intensity existing there has been determined by Hochanadel and Ghormley by calorimetrically measuring the heat produced in water.

The chamber was placed within the cylinder and the ion current produced in four different gases; CO_2, dry air, He, and A, measured. The results of these measurements permitted an excellent comparison of the effective energies per ion pair in the various gases and also made possible a comparison of the results of the two different calorimetric measurements.

Other reports, ORNL-760 and C.F. 50-7-86, discuss the heat distribution in the MTR graphite reflector as determined from ionization chamber measurements in the mock-up.

APPARATUS

Ionization Chamber. The ionization chamber calibrated in this study was one of the type designed by R. K. Abele of Oak Ridge National Laboratory, for use in gamma ray distribution measurements in the mock-up. It was constructed principally of graphite and had a volume of about 10 ml. A scale drawing of the chamber giving some details of construction is shown in Figure 1. As may be noted the thickness of the walls was less than the range of most of the secondary electrons which were anticipated. To provide a greater thickness during measurements in the pile, the chamber was placed in a graphite cup the walls of which were 1 cm thick. The gas filling for the chamber was introduced through a hole near the top of the inner electrode and allowed to leak out through a small hole in the bottom of the outer wall. During measurements the desired gas was passed continuously into the chamber at an approximate rate of 2 cu. ft. per hr. Gases from commercial tank supplies were used in all cases.

Measurements of the ion current developed in the chamber were made with a low drift electrometer of the type described by Glass.[3] The electrometer was provided with a 20 microampere meter with which the IR drop across the grid resistor could be read. Alternatively the voltage developed could be read with an external potentiometer, in which case the electrometer was operated as a null indicator. The potentiometer was capable of giving more sensitive readings than the microampere meter, but readings with the latter were reproducible to about ± 1% when made in the middle of the scale. Connection between the electrometer and the inner electrode of the chamber was made through a 20 foot length of amphenol cable of the type RG-7/U. The chamber walls were held 300 volts below the inner electrode through a second lead.

Preliminary measurements were made with the ion chamber in hole 12 to determine whether or not the 1 cm thickness of graphite was greater than the range of substantially all the energetic recoil electrons formed. No change in the ion current readings was found when the 1 cm wall was replaced with one of 0.75 cm. whereas a decrease in the current should have resulted if any significant portion of the recoil electrons had ranges greater than 0.75 cm. of graphite. An appreciable increase in the current resulted when no external covering of graphite was used over the chamber. However, the

NOT CLASSIFIED
DWG. 9730

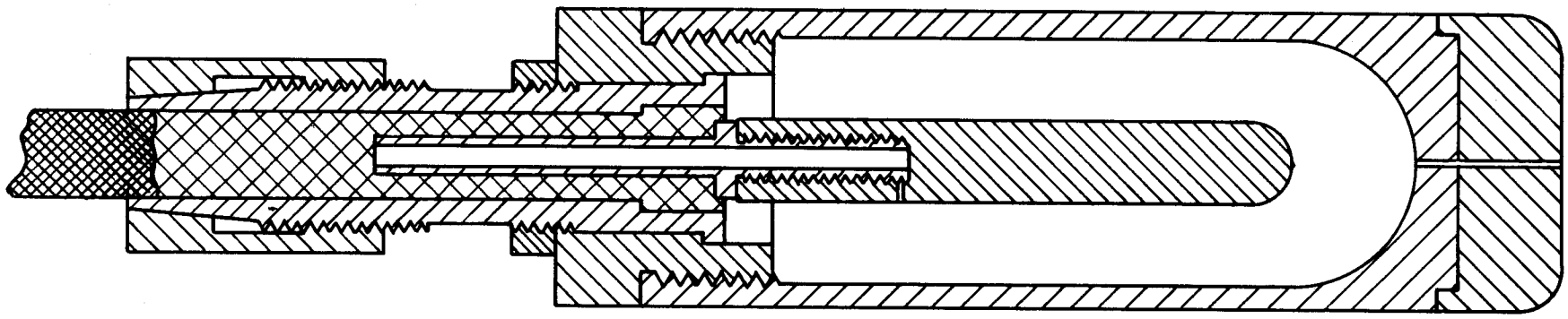

SCALE 2" = 1"

REF: DETAILS AND ASSEMBLY
DWG. Q-948-1
INSTRUMENT DEPT.

FIG. 1
IONIZATION CHAMBER

added current most likely arose from absorption of energetic β-rays emitted by the aluminum which lined the hole. It should be noted that the 0.75 cm. of graphite plus the thickness of the chamber walls was sufficient to stop the most energetic of the β-rays from Al^{28} so that the effect of the β-rays may be ruled out in interpreting the results obtained with the 0.75 cm. and the 1.0 cm. walls. When the cobalt source was used, the chamber was surrounded by 3 mm. of graphite.

When making pile measurements to be compared with those of the calorimeter, the ionization chamber and graphite cup were placed within containers which were close reproductions of the calorimeter container. Indeed, replacement of the calorimeter by the ion chamber consisted essentially of replacing the contents of the calorimeter vacuum jacket D, Fig. 2, with the graphite cup and chamber. Actually, a second stainless steel Dewar B, Figure 2, was used with the chamber but the outer silica glass Dewar was the same in each case. In the chamber assembly the material above the vessel B, Figure 2, was replaced by a 3/4" O.D. stainless steel tube through which the chamber leads were passed. Where necessary to complete the reproduction of the calorimeter surroundings, other materials were added to the side walls and bottom of the chamber assembly. No liquid nitrogen was placed in the silica glass Dewar during chamber measurements as was the case during calorimetric measurements.

Calorimetric Apparatus. The calorimeter which was designed to operate within the hole and to measure the anticipated low powers was, in principle, very similar to other calorimeters which have been used at this laboratory. It operated at the temperature of liquid nitrogen, and the rate at which nitrogen was vaporized by the source was used as a measure of the heat input. Reference is made to the paper dealing with the previous instrument for a discussion of the theory and operation of such calorimeters.[4]

Several modifications were made in the design previously described in order to make the calorimeter suitable for the present measurement. As before, the calorimeter consisted basically of three concentric vacuum jacketed vessels, but for this application these were constructed of materials having low activation cross sections for thermal neutrons. The outer vessel was of silica glass and the intermediate and inner vessels were constructed either of mild steel or of stainless steel. All of the connecting tubing was of thin walled stainless steel. The innermost and intermediate vessels, which, respectively, formed the calorimeter proper and the calorimeter bath were assembled permanently with soldered joints. These vessels were connected through tubes with the external bath so that the vessels could be cooled and filled with the required amount of liquid without dismantling the calorimeter. Long stemmed valves placed in the outer bath were used to regulate the opening between the vessels and the bath. The calorimeter proper and its vacuum jacket were designed so that most of the heat generated in the calorimeter by gamma irradiation would arise from absorption of the radiation in graphite and only a small part from absorption in other materials.

This was accomplished by keeping the weight of the calorimeter small compared with that of the graphite with which it was in contact, and by lining the inner surface of the calorimeter jacket with sufficient graphite to stop most of the recoil electrons originating in the metal walls of the jacket.

A scale drawing of the calorimeter assembly is shown in Figure 2. The three vacuum jacketed vessels are identified in the drawing as A, B and C where the last is the calorimeter proper. The calorimeter proper was surrouned and was in good thermal contact with a thick ring (33.40 g.) of graphite C' which comprised the calorimetric sample. A resistance heater of the type previously used was placed in the graphite at F and was employed in calibration measurements. The vacuum jacket for the calorimeter is shown at D and the graphite liner at D'. Evacuation of the jacket was effected by means of the tube labeled "to vacuum". The calorimeter proper was connected with the external pressure control system and the value e through two small tubes E and E', respectively. The tubes also served as a suspension for the calorimeter.

A gamma ray entering the calorimeter normal to the side traverses 160 mils of silica glass (fused quartz), 30 mils of 317 stainless steel, 15 mils of mild steel, 15 mils of 2S aluminum and a few mils of liquid nitrogen. Inside the calorimeter, before reaching the graphite D', it will pass through 4 mils of 304 stainless steel and another few mils of liquid nitrogen.

The apparatus used to control the vapor pressure of the nitrogen within the calorimeter and within the bath and to measure the gas evolved from the calorimeter were, with only minor changes, reproductions of those previously described.[5]

Operating Procedures. To set the calorimeter into operation, liquid nitrogen was placed in the outer vessel and allowed to flow into vessel B through valve b. A slight vacuum was then applied to tube e which led to the calorimeter proper, and liquid thus drawn into that container through valve e'. When the calorimeter was cold, as indicated by the resistance of the resistor F, the excess liquid was forced out through tube E' and valve e' closed. The connection between the calorimeter and the pressure control system was then opened. The excess liquid in the bath was then forced out in a similar manner, valve b closed, and the bath region connected with its pressure control system through tube b'. The calorimeter was then in operation. During operation the vacuum jacket was evacuated continually. After the calorimeter had been placed in operation as outlined above, it was necessary to replenish the supply of liquid nitrogen in the outer container at intervals of several hours. However, the supply of nitrogen within the calorimeter proper was sufficient for about 14 hours of operation at the maximum power level which was measured, and proportionately longer times at the lower levels. Thus a series of many measurements could be made without any readjustments whatsoever.

NOT CLASSIFIED
DWG. 9665

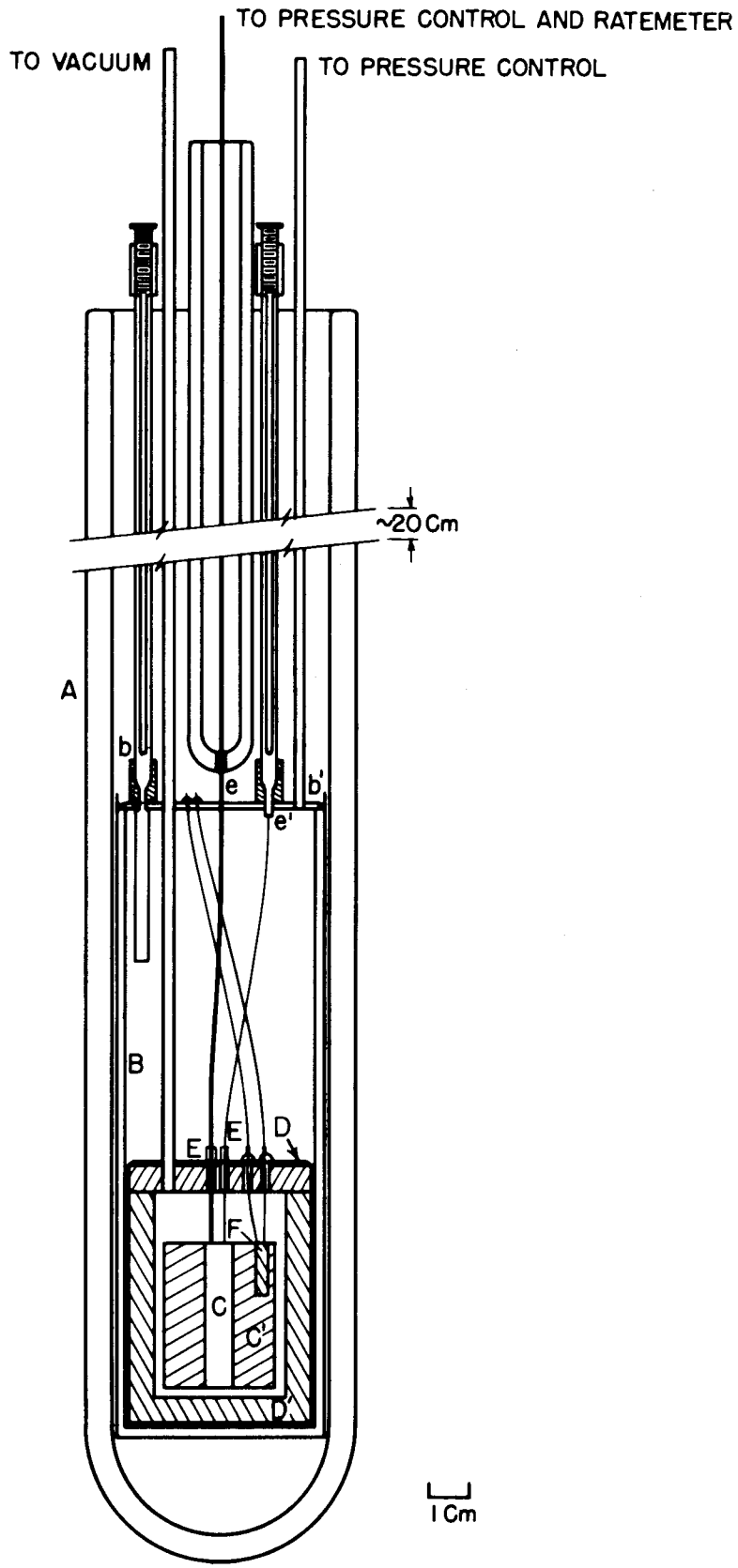

FIG. 2
CALORIMETER

[redacted]

Performance of Calorimeter. Studies of the performance of the calorimeter as well as calibration determinations were carried out using the resistance heater to develop precisely known power levels within the calorimeter. The results of a series of such measurements are shown in Table 1. The powers developed by the heater are listed in column three and the rates of gas evolution measured in several successive observations at each power are listed in column four. Column five contains a list of rate values computed from the equation

$$R = 0.321 + 0.5366\ W \times 10^4$$

(R = rate in arbitrary units and W = power level in watts), which was determined from the experimental data by the method of least squares. The deviation of the measured from the computed values is shown in the final column.

These results fell nicely on a straight line indicating that the calorimeter was operating satisfactorily at all power levels investigated. The probable deviation of the measured values from the computed line is ± 0.2%. It is interesting to note that at zero heat input the equation predicted a rate of 0.321 identical with the measured rate; although the measured value was not used in computing the line because the calorimeter was considered less reliable at the very low rate of gas evolution observed there.

The results of two further series of calibration measurements are shown in Table II. To correlate the data for different measurements in a given series, a value for the rate at zero power was computed from each measured rate making use of the slope determined above. This value was called the background of the calorimeter and is shown in column six. The deviation of the background at each point from the average for the series is given in the final column. Measurement 4 of series 2 was not used in determining the series average.

All measurements within a given series were carried out using one filling of liquid nitrogen in the calorimeter and bath, and no changes in the calorimeter were made during a given series. Before each different series of measurements, however, the calorimeter and bath were refilled. It can be seen from the data that a large variation existed in the average background found in the different series of measurements but that only a small variation existed between the separate measurements of a series. Slightly different operating conditions such as the degree of tightness of the valve opening into the calorimeter probably accounted for the observed differences.

[redacted]

TABLE I

Calorimeter Calibration Data

Series Number	Measurement Number	Power Watts x 10^4	Rate of Nitrogen Evolution Arbitrary Units			Deviation
			Measured	Average	Computed	
1	1	4.178	2.608 2.596 2.581	2.595	2.563	-0.032
1	2	1.868	1.320 1.322	1.321	1.323	+0.002
1	3	7.189	4.169 4.160 4.190	4.173	4.179	-0.006
1	4	6.103	3.570 3.571 3.590 3.593	3.581	3.596	+0.015
1	5	3.636	2.242 2.243 2.275	2.253	2.272	-0.019
1	(6)	0.000	0.321	0.321	0.321	0.000
1	7	8.983	5.129 5.157	5.143	5.141	+0.002

TABLE II

Calorimeter Calibration Data

Series Number	Measurement Number	Power Watts x 10^4	Rate of Nitrogen Evolution Arbitrary Units		Background Rate Arbitrary Units	
			Measured	Average	Computed	Deviation
2	1	4.261	2.704 2.733 2.635 2.681 2.688	2.688	0.402	+ .002
2	2	2.360	1.682 1.670 1.673	1.675	0.409	+ .009
2	3	5.195	3.178 3.177	3.178	0.390	- .010
2	(4)	0.000	0.436	0.436	0.436	+ .036
3	1	6.054	3.553 3.547 3.511 3.480	3.547	0.298	+ .022
3	2	11.075	6.223 6.170	6.197	0.254	- .022
3	3	11.878	6.634 6.661 6.651	6.649	0.275	+ .001

Procedure:

Before carrying out comparisons between calorimetric and ionization chamber measurements, the pile was brought to a specified power level and held constant by adjustments of the bottom rod only, leaving the top rod at a fixed position. The bottom rod is a considerable distance below the top of the graphite in the pile, and adjustments of this rod had no appreciable effect on the flux distribution in the upper part of hole 12 where measurements were made. An ionization chamber (not assembled in jackets) was then placed in the hole and the ion current measured as a function of time. It was found that the readings generally leveled off and became constant to within a few percent about 30 minutes after first adjusting the pile power. Throughout the duration of a comparison the same chamber was used to observe the gamma flux at intervals and to determine the extent of any changes which might have occurred.

With the pile at a constant power, the calorimeter was set into operation and calibrated with the aid of the resistance heater at a power level close to that expected when placed in the pile. The calorimeter assembly was then placed in a support made of 15 mil aluminum, lowered to the specified depth in the pile and a measurement carried out. Following the measurement, the calorimeter was withdrawn and again calibrated. A chamber measurement, using either the chamber assembled in jackets or the unassembled one, or both, was also made following the calorimetric measurement.

Careful attention was given to reproducing the same position in the hole with each instrument, but the exact position was not very critical as may be seen by reference to the graph in Figure 3. In the graph, ionization chamber readings are plotted against the position in the hole at which the readings were taken. In the region of the air gap the change in reading with position was small.

Comparison between the calorimeter and chamber were performed at three different pile powers, 1100, 2000 and 3300 kw. The ionization chamber measurements at the two lower powers made use of the microampere meter attached to the low drift electrometer. At 3300 kw a potentiometer was employed in place of the meter.

An additional calorimetric measurement was carried out at the 3300 kw level to determine the correction to be applied because of the presence of liquid nitrogen within the calorimeter proper. Although the maximum amount of this liquid was held to about 0.7 ml, it was anticipated that several percent of the total heat developed in the calorimeter would arise from n,p reactions occurring in the nitrogen. The determination of the magnitude of the effect consisted of volatilizing off a measured quantity of the liquid following the initial measurements and then repeating the measurement with the smaller quantity of liquid. The observed difference between the two measurements determined the power developed in the volatilized portion.

NOT CLASSIFIED
DWG. 9731

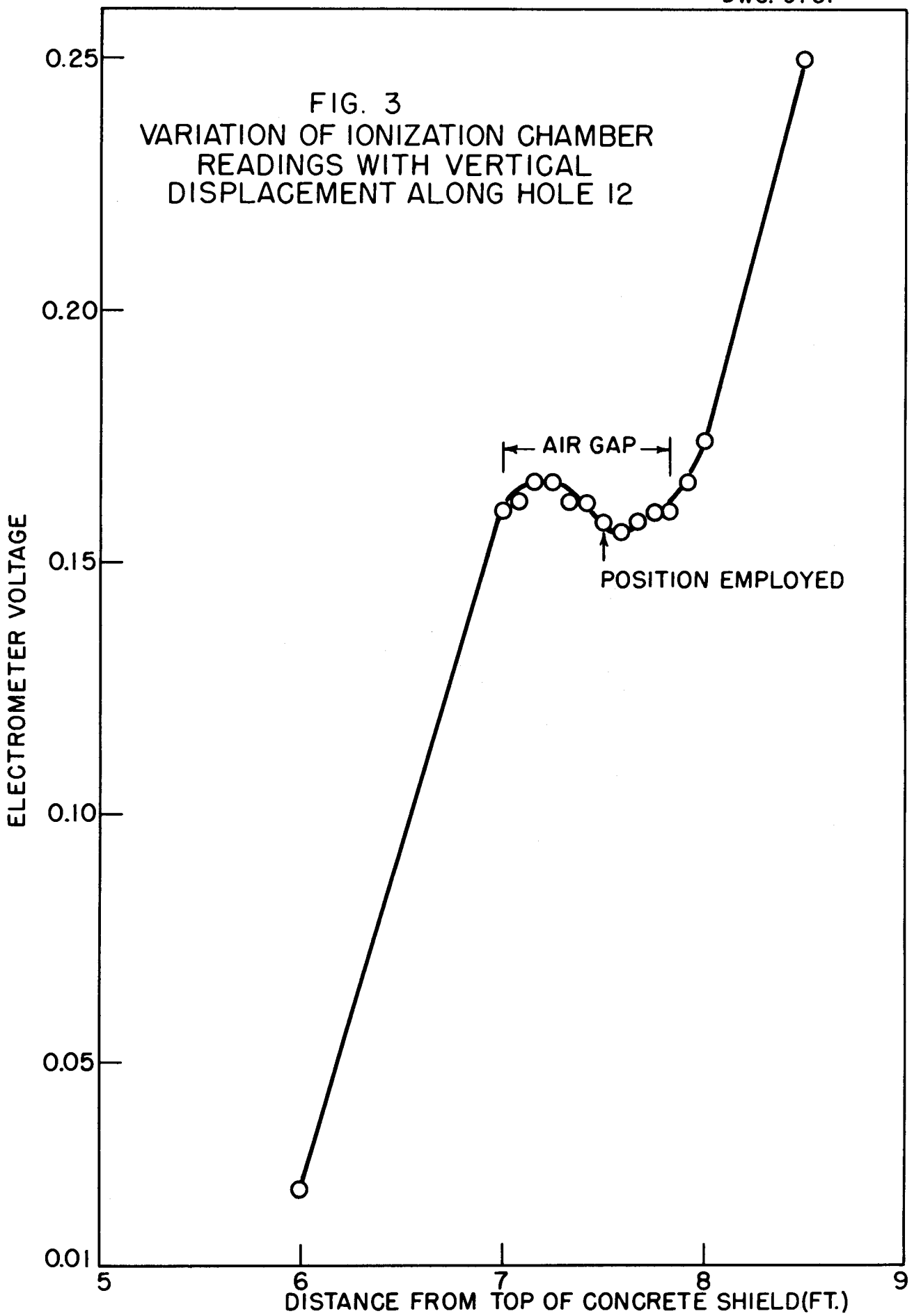

FIG. 3
VARIATION OF IONIZATION CHAMBER READINGS WITH VERTICAL DISPLACEMENT ALONG HOLE 12

Determinations of the relative amounts of liquid nitrogen in the calorimeter at any given time were made by measuring the volume of the evolved gas collected in a calibrated flask. Complete volatilization at the end of a series of measurements determined the total quantity of liquid in the calorimeter at the beginning of the series.

Measurements of the slow neutron flux to which the chamber and calorimeter were exposed were made using gold foils. The amount of induced activity was compared with the amount formed in a standard pile. Cadmium ratios were also determined with gold foils. Mr. John Hill was kind enough to make these measurements for us.

Results:

The calorimetric results obtained in the various pile measurements and the comparative ionization chamber measurements are shown in Tables III and IV, respectively. The order in which measurements with two instruments were made may be found by reference to the time of each measurement.

The column headings of Table III are largely self explanatory. The background rates shown in column 5 are rates determined from the two calibration measurements which, respectively, preceded and followed the given pile measurements. The average for the two calibration measurements was used in computing the values, shown in column 6, for the total power developed within the calorimeter. The differences between the values for the total powers and the powers arising in the liquid nitrogen of the calorimeter are listed in column 9 and the estimated probable errors associated with the differences are given in the final column. The contribution of the liquid nitrogen to the heating was determined from the results shown for the two measurements at 3300 kw. In computing the effect at the lower pile powers, it was assumed that the neutron flux was proportional to the power.

Measurements with both the jacketed chamber, i.e. the chamber which had essentially the same materials surrounding it as the calorimeter, and the unjacketed chamber are included in Table IV. The former chamber has been labeled number 1 and the latter chamber number 2. The measurements with chamber number 2 showed that a change in the pile power took place during the comparison at 1100 and 3300 kw.

In all cases, however, a measurement with chamber number 2 closely preceded or followed the measurements with each of the other instruments and on the basis of these measurements corrections were applied to the jacketed chamber readings to permit comparisons with the calorimetric measurements. The actual correction applied was 1/2 of the observed percentage difference between the initial and final readings with chamber 2. One-half of the percentage difference was also taken as the probable error in each case. The ion current values adjusted in this manner and the estimated probable errors are listed in columns 8 and 9 of Table IV.

TABLE III

Power Produced in Calorimeter in Pile

Date	Time	Pile Power KW	Rate of Nitrogen Evolution Arbitrary Units	Background Nitrogen Evolution Arbitrary Units		Power Generated in Calorimeter Watts x 10^4	Quantity of Nitrogen in Calorimeter moles x 10^2	Power Generated in Nitrogen Watts x 10^4	Power Generated in graphite and metal Watts x 10^4	Probable Error-Percentage
June 19	9:05 - 10:43 PM	1100	2.542	0.345 0.294	0.320	4.141	1.78	0.237	3.904	± 1.6
June 20	5:30 - 6:38 AM	2000	4.275	0.307 0.317	0.312	7.385	1.49	0.361	7.024	± 1.0
June 23	1:24 - 2:18 PM	3300	7.173	0.305 0.288	0.297	12.814	1.94	0.775	12.039	± 1.3
June 23	4:37 - 5:00 PM	3300	6.903	0.299 0.213	0.256	12.387	0.88	-	-	-

[redacted]

TABLE IV

CO_2 Chamber Measurements in Pile

Date	Time	Pile Power KW	Chamber Number	Meter Reading Amps x 10^6	IR Volts	Ion Current Amps x 10^8	Adjusted Ion Current for Comparison Amps x 10^8	Probable Error Percentage
June 19	8:10 PM	1100	2	2.0	.048	.49		
June 20	1:18 AM	1100	1	2.6	.065	.64	.63	± 3.0
June 20	2:50 AM	1100	2	2.1	.051	.51		
June 20	5:20 AM	2000	2	3.7	.090	.90		
June 20	8:00 AM	2000	1	4.6	.113	1.12	1.12	± 2.5
June 20	8:23 AM	2000	2	3.7	.090	.90		
June 23	9:28 AM	3300	2	-	.1538	1.530		
June 23	10:30 AM	3300	1	-	.1959	1.949	1.919	± 1.5
June 23	2:23 PM	3300	2	-	.1490	1.483		
June 23	5:35 PM	3300	2	-	.1486	1.479		

On June 23rd the voltage (IR) was determined directly with a potentiometer.

[redacted]

The graphite in contact with the calorimeter was found to weigh 33.40 g. The calorimeter itself weighed 1.24 g. and was made up of the following materials:

Tin - 0.40 g.

Lead - 0.24 g.

Stainless Steel - 0.60 g.

Assuming the energy absorption coefficient of the calorimeter was the same as that for graphite for the pile gamma rays seen by the calorimeter, the power developed per gram of graphite was computed. These values were then combined with the ion chamber readings to obtain the effective energy required to form an ion pair in CO_2 in the chamber. The results are shown in Table V. The estimated probable error associated with each of these values is shown in the final column. The weighted mean of the three different ϵ values is 32.7 ev ± 2%.

The validity of the assumption of equal absorption coefficients for the graphite and metals in the calorimeter depends, of course, upon the average energy of the gamma rays passing through the calorimeter. For energies between 0.8 Mev and 2 Mev, the coefficients do not differ appreciably. However, for energies at the limits 0.6 - 5 Mev, the coefficients differ sufficiently to lower the values for the power per gram of graphite and, at the same time, the average energies to form an ion pair in CO_2 by 2%. The effective absorption coefficients of various materials for gamma radiations at the center of hole 12 has been shown by Richardson[5] to be equal to those for 0.8 Mev radiation. It is likely then that the effective gamma energy at the site of the present measurement fell within the limits 0.6 - 5 Mev since a large fraction of the gamma energy resulted from neutron capture in surrounding materials. If any energy in the above range was equally probable as the effective energy, the value of 32.7 ev per ion pair in CO_2 should be lowered by 1% and the probable error increased accordingly. This change results in a value of 32.4 ev ± 2.2%.

The results obtained in measuring the ion currents produced in various gases by pile radiations and by the cobalt gamma source are shown in Table VI where the source of radiation and the observed ion currents are listed in columns 3 and 4, respectively. The apparent energies expended in ion pair production in the different gases are shown in column 7. These values were computed with the assumptions that the true average energy per ion pair in CO_2 was 32.4 ev as previously determined and that the only difference between CO_2 and the other gases were the differences in electron densities.

CONFIDENTIAL

TABLE V

Calorimetric Determination of Apparent Energy Required to Form Ion Pairs in CO_2

Pile Power kw	Power per gram of graphite Watts x 10^5	Rate of Formation of Ion pairs in chamber per sec. per gram x 10^{-12}	Average Energy to produce ion pairs in CO_2 (ev)	Probable Error Percentage
1100	1.127	2.1_8	$32._3$	± 3.5
2000	2.028	3.8_6	$33._0$	± 2.7
3300	3.475	6.62	32.8	± 2.0

CONFIDENTIAL

[redacted]

TABLE VI

Ionization Chamber Data for Various Gases

Measurement Number	Gas	Source of Radiation	Ion Current Amps x 10^8	Temp °C	Pressure mm Hg	Apparent Energy per ion pair ev	Corrected Energy per ion pair ev	Energy per ion pair Assuming air = 32.4 ev
1	CO_2	Pile	1.54	25	741	32.4	32.4	-
2	Air	Pile	2.39	25	741	13.7	(33.3)	-
3	He	Pile	0.190	25	741	23.9	27.2	-
4	CO_2	Cobalt	36.97	33.0	745	32.4	32.4	31.5
5	Air	Cobalt	23.60	33.0	745	33.3	33.3	32.4
6	He	Cobalt	4.445	33.0	745	24.5	27.1	26.4
7	A	Cobalt	34.18	33.0	745	28.7	27.2	26.5

[redacted]

[redacted]

Although the above values are the ones which would be employed in connection with ion chamber measurements made under comparable conditions, they are not the true values for the energies per ion pair in every case. This follows from two considerations: (1) both N_2 and He undergo reactions of the n,p type with pile neutrons and thus the chambers employing these gases received more particle radiation than the CO_2 chambers, and (2) the stopping powers of A and He differ appreciably from that of CO_2 and air so that the amount of recoil electron energy which was absorbed per electron in these gases differed from that absorbed in CO_2 and air. In column 8 of Table VI values for the energies expended per ion pair which have been corrected for these effects are listed. As before, the energy per ion pair in CO_2 was taken as 32.4 ev. Corrections for stopping power were made using the values given by Williams[6] for argon, oxygen and hydrogen. No published value for He was found but it was assumed in the computation to be nearly the same as that for H_2. The stopping powers of CO_2 and air were assumed to be equal to each other and to that of graphite.

From the calorimetric determination of the amount of power generated in nitrogen at the point of measurement, it was possible to compute a good value for the total proton recoil energy produced in the air chamber in the pile. Part of this energy was dissipated in the chamber walls so that no accurate correction for the n,p contribution could be applied to the chamber readings. However, assuming that, except for the n,p effect, the CO_2 and the air chamber readings would have been in the same ratio as that found in the cobalt source, it was possible to find the fraction of the proton energy which was expended in producing ions in the chamber. This fraction was 0.5. A correction for the n,p reactions in the helium chamber was determined using this fraction together with the values for the neutron flux and the listed cross section of He for the n,p reaction. The pertinent data from which the computation were made are given in Table VII.

[redacted]

[redacted]

TABLE VII

Data for Correcting the Ionization Chamber Readings In Different Gases

Element	Stopping Power	Number of atoms in Chamber	Cross Section for n,p Reaction Barns	Neutron Flux from Calorimetric Measurement n's/cm^2/sec
N_2	10.6	4.0×10^{20}	1.7	1.5×10^{10}
O_2	10.6	-	-	1.5×10^{10}
CO_2	10.6	-	-	1.5×10^{10}
He	11.7	2.5×10^{20}	8×10^{-3}	1.5×10^{10}
A	10.0	-	-	1.5×10^{10}

[redacted]

The value for the nv at the operating position which was determined with the gold foils was $1 \times 10^{10} \pm 40\%$ when the pile was operating at 3300 kw. The cadmium ratio obtained was in the neighborhood of 80. The uncertainty in the absolute value of the flux was due in considerable part to the uncertainty in the absolute value for the flux in the standard pile. The flux determined in the calorimetric measurement was considered reliable to about 15%.

The use of 32.4 ev per ion pair in CO_2 results in a value for ϵ in air which is slightly higher than the generally accepted one. Gerbes[7] found an ϵ of 33.4 ev per ion pair in air for 10 Kev cathode rays and 32.4 ev per ion pair for 40 Kev cathode rays. Moreover, he also found ϵ values of 31.2 ev and 32.2 ev, respectively, for the higher and lower energy cathode rays in CO_2. The results of Gerbes for air are in fair agreement with the results of other investigators.[8] From the results of Gerbes's measurements, it appears likely that the true energy per ion pair produced in the air chamber in the present work was nearer to the value 32.4 ev than to 33.3 ev. The lower value having more probability because the gamma radiations measured were of fairly high energy. The values for the energies per ion pair in each of the gases studied which are obtained assuming 32.4 ev for air are listed in the final column of Table VI. The resulting value of 31.5 ev for CO_2 is in close agreement with that found by Gerbes. The value of 26.5 ev for argon agrees, within the estimated error, with the 26.9 ev determined for 17.41 Kev X-rays in argon by Nicodemus.[9] It is, however, higher than would be expected from Gerbes's value of 25.2 ev for 40 Kev electrons. No value for the energy per ion pair in He has been found in the literature.

The power generated in graphite by the cobalt source was found from the CO_2 chamber measurements to be 6.71×10^{-4} watt/g. Using the energy absorption coefficients for water and for graphite given by Hirschfelder and Adams,[10] the heat produced in water in the same position was then calculated to be 7.45×10^{-4} watt/g. The calorimetric measurement of Hochanadel and Ghormley[11] which was carried out in the same position yielded a value which, after correcting for small differences in the amounts of absorber between source and sample, agreed with the above value within about 1%.

Aside from the previously discussed corrections, there is no other appreciable correction to apply to the comparison of the calorimetric and ionization chamber measurements. The 6 mm of graphite which lined the calorimeter vacuum jacket was sufficient to stop electrons recoiling with energies up to 2.1 Mev and to greatly reduce the energies of faster electrons. The calorimeter graphite thus simulated a small section of graphite surrounded by a larger mass, as did the ionization chamber. The effect of placing the various jackets about the calorimeter and chamber was to raise the gamma flux at the center of the jackets by about 25% due to neutron capture in the walls.

The effect of fast neutrons upon the measurements with either of the instruments was probably negligible. This can be deduced from the high value found for the cadmium ratio at the site of the measurements and from the results of Richardson's calorimetric measurements which were made near the center of hole 12. Richardson[5] found that the heat generated in graphite by neutron scattering at that point amounted to approximately 20% of the heat generated by absorption of gamma radiation. However, the cadmium ratio for gold near the center of the pile is known to be about 3.3;[12] smaller by a factor of 25 than that found at the site of the present measurements. Since the ratios of the slow neutron flux to the gamma intensity at each position were nearly equal, it then appears reasonable to assume that the fast neutron flux contributed less than 1% of the heat measured in the present study.

The results of the air chamber measurement in the pile emphasize the difficulties encountered in the use of this gas in the presence of slow neutrons. The ion current caused by protons resulting from n,p reaction with nitrogen in the chamber was nearly twice that resulting from absorption of gamma radiations. No attempt was made to apply a rigorous correction for the n,p contribution because of the uncertainty in the values of the slow neutron flux and the cross section for the reaction.

To summarize, the ionization chamber employing CO_2 was found to give results which agreed well with the calorimetric results. The best value for the energy per ion pair in CO_2 was probably the 31.5 ev found in the cobalt source measurement, and this value, compared with the 32.4 ev found in the calorimetric measurements, indicates that the ionization chamber was about 97% efficient. Additional support for the accuracy of the calibration was furnished by the close agreement between the measurements with the calibrated CO_2 chamber in the cobalt source and the calorimetric measurements of Hochanadel and Ghormley. CO_2 is the only one of the gases studied which can be used reliably in the pile. For applications in which neutrons are not encountered, any of the other gases can be used. The effective energy per ion pair in each of several gases has been measured in this study and each value is probably known with the same accuracy as that of CO_2. The values for the various gases are listed in Table VII.

[redacted]

REFERENCES

1. L. H. Gray, Proc. Roy. Soc. 156, 578 (1936).
2. G. W. C. Kaye, G. E. Bell, W. Binks and W. F. Perry, Reports on Progress in Physics 6, 95 (1939). See also T. J. Wang, Nucleonics 7, No. 2 (1950).
3. F. M. Glass, ORNL-486, Dec. 30, 1949.
4. C. V. Cannon and G. H. Jenks, Rev. Sci. Inst. 21, 236 (1950).
5. D. M. Richardson, ORNL-129, Oct. 1 (1948).
6. E. J. Williams, Proc. Roy. Soc. 135, 108 (1932).
7. W. Gerbes, Annider Physik 30, 169 (1937).
8. W. Binks, Reports on Progress in Physics 3, 347 (1936).
9. D. B. Nicodemus, thesis, Stanford University (1946).
10. J. O. Hirschfelder and E. N. Adams II, Phys. Rev. 73, 863 (1948).
11. C. J. Hochanadel and J. A. Ghormley, Oak Ridge National Laboratory, private communication.
12. J. W. Jones, H. M. Clark and R. T. Overman, MonC-398, Feb. 27, 1948.

[redacted]