UNCLASSIFIED

MARTIN MARIETTA ENERGY SYSTEMS LIBRARIES

3 4456 0352754 7

ORNL 1028
Instrumentation

A STANDARD GAMMA RAY IONIZATION CHAMBER FOR SHIELDING MEASUREMENTS

L. H. Ballweg
J. L. Meem

LIBRARY LOAN COPY

DO NOT TRANSFER TO ANOTHER PERSON

If you wish someone else to see this document, send in name with document and the library will arrange a loan.

OAK RIDGE NATIONAL LABORATORY
OPERATED BY
CARBIDE AND CARBON CHEMICALS COMPANY
A DIVISION OF UNION CARBIDE AND CARBON CORPORATION
UCC
POST OFFICE BOX P
OAK RIDGE, TENNESSEE

UNCLASSIFIED

UNCLASSIFIED

ORNL -1028

This document consists of 55 pages.
Copy 9 of 214, Series A

Contract No. W-7405, eng 26

PHYSICS DIVISION

A STANDARD GAMMA RAY IONIZATION CHAMBER FOR SHIELDING MEASUREMENTS

by

L. H. Ballweg, Major, U.S.A.F.
J. L. Meem, ORNL

DATE ISSUED: [illegible] 19[illegible]

OAK RIDGE NATIONAL LABORATORY
operated by
CARBIDE AND CARBON CHEMICALS COMPANY
A Division of Union Carbide and Carbon Corporation
Post Office Box P
Oak Ridge, Tennessee

MARTIN MARIETTA ENERGY SYSTEMS LIBRARIES

3 4456 0352754 7

INTERNAL DISTRIBUTION

1. G. T. Felbeck (C&CCC)
2-3. Chemistry Library
4. Physics Library
5. Biology Library
6. Health Physics Library
7. Metallurgy Library
8-9. Training School Library
10-13. Central Files
14. C. E. Center
15. C. E. Larson
16. W. B. Humes (K-25)
17. W. D. Lavers (Y-12)
18. A. M. Weinberg
19. E. H. Taylor
20. E. D. Shipley
21. A. H. Snell
22. F. C. VonderLage
23. R. C. Briant
24. J. A. Swartout
25. S. C. Lind
26. F. L. Steahly
27. A. Hollaender
28. M. T. Kelley
29. G. H. Clewett
30. K. Z. Morgan
31. J. S. Felton
32. A. S. Householder
33. C. S. Harrill
34. C. E. Winters
35. D. S. Billington
36. D. W. Cardwell
37. W. H. Pennington
38. E. O. Wollan
39. C. B. Ellis
40. L. D. Roberts
41. R. N. Lyon
42. W. C. Koehler
43. W. K. Ergen
44. E. P. Blizard
45. M. E. Rose
46. Roland Abele
47. J. L. Meem
48. T. A. Welton
49. A. Simon
50. F. H. Murray
51. F. K. McGowan
52. R. Zirkind
53. C. E. Clifford
54. M. J. Skinner
55-59. Central Files (O.P.)

EXTERNAL DISTRIBUTION

60-67. Argonne National Laboratory
68. Armed Forces Special Weapons Project
69-71. Atomic Energy Commission, Washington
72. Battelle Memorial Institute
73. Brush Beryllium Company
74-77. Brookhaven National Laboratory
78. Bureau of Medicine and Surgery
79. Bureau of Ships
80-83. Carbide and Carbon Chemicals Company (K-25)
84-87. Carbide and Carbon Chemicals Company (Y-12)
88. Columbia University (J. R. Dunning)
89. Columbia University (G. Failla)
90. Dow Chemical Company
91-95. E. I. duPont deNemours and Company
96-101. General Electric, Richland
102-105. Idaho Operations Office
106-107. Iowa State College
108. Kansas City Operations Branch
109. Kellex Corporation
110. Kirtland Air Force Base
111-114. Knolls Atomic Power Laboratory
115-117. Los Alamos Scientific Laboratory
118. Mallinckrodt Chemical Works
119. Massachusetts Institute of Technology (A. Gaudin)
120. Massachusetts Institute of Technology (A. R. Kaufmann)
121-123. Mound Laboratory
124. National Advisory Committee for Aeronautics
125. National Bureau of Standards (R. D. Huntoon)

126. Naval Medical Research Institute
127-128. Naval Radiological Defense Laboratory
129. New Brunswick Laboratory
130-132. New York Operations Office
133-134. North American Aviation, Inc.
135. Patent Branch, Washington
136. RAND Corporation
137. Sandia Corporation
138. Santa Fe Operations Office
139. Savannah River Operations Office, Wilmington
140-154. Technical Information Service, Oak Ridge
155-156. U. S. Geological Survey (T. B. Nolan)
157-158. U. S. Public Health Service
159. University of California at Los Angeles
160-162. University of California Radiation Laboratory
163-164. University of Rochester
165. University of Washington
166. Western Reserve University
167-170. Westinghouse Electric Corporation
171-174. Atomic Energy Project, Chalk River
175. Chief of Naval Research
176. H. K. Ferguson Company
177. Harshaw Chemical Corporation
178. Isotopes Division (Mr. McCormick)
179-180. Library of Congress, Acquisition Department (J. W. Cormn)
181. National Bureau of Standards (Library)
182. National Research Council, Ottawa
183. Naval Research Laboratory
184. Nevis Cyclotron Laboratories
185-186. Oak Ridge Institute of Nuclear Studies
187-196. United Kingdom Scientific Mission (M. Greenhill)
197. USAF, Air Surgeon (Col. A. P. Gagge)
198. USAF, Eglin Air Force Base (Technical Library)
199. USAF, Wright-Patterson Air Force Base (Rodney Nudenberg)
200-204. USAF, Wright-Patterson Air Force Base (CADO)
205. U. S. Army, Army Field Forces (Captain James Kerr)
206. U. S. Army, Army Medical Service Graduate School (Col. W. S. Stone)
207. U. S. Army, Atomic Energy Branch (Lt. Col. A. W. Betts)
208. U. S. Army, Director of Operations Research (Dr. Ellis Johnson)
209-210. U. S. Army, Office of the Chief Signal Officer (Curtis T. Clayton thru Major George C. Hunt)
211-213. U. S. Army, Technical Command (Col. J. H. Rothschild Attn: Technical Library)
214. UT-AEC Agricultural Research Program (Charles S. Hobbs)

TABLE OF CONTENTS

		Page
I.	Introduction	5
II.	Apparatus	6
III.	Air Calibration of Standard Chamber Against Radium Source	11
IV.	Description of Water Calibration Methods	14
V.	Effect of Using Carbon Dioxide in the Chambers	17
VI.	Calibration of Co^{60} Source	18
VII.	Determination of Attenuation Curve in Water Tank Using Co^{60} Source and Standard Chamber	20
VIII.	Calibration of 10^{10} and 10^{12} 900 cc. and 50 cc. Variable Chambers.	21
Appendix A -	Description of Design of Chamber	26
Appendix B -	Determination of Correction Factor when Replacing Air with CO_2 in Chambers	28
Appendix C -	Water Attenuation Calculations Using Standard Chamber and Co^{60} Source	38
Appendix D -	Calculations of Water Attenuation Using Co^{60} Source and 50 cc. Variable, 10^{10}, 10^{12} 900 cc. Chambers	45
Appendix E -	Assembly Print of Standard Chamber	53
Appendix F -	Assembly Print of 900 cc. Chamber	54

LIST OF ILLUSTRATIONS

1. Photograph of Standard Chamber

2. Photograph of 900 cc. Chamber

3. Low Drift A.C. Electrometer Circuit

4. Reference Voltage Circuit for Electrometer

5. Chamber Air Calibration Equipment

6. Air Calibration of Standard Chamber

7. Chamber Water Calibration Tank

8. Air Calibration of Standard Chamber Using CO_2

9. Attenuation in Water Using Standard Chamber and Co^{60} Source

10. Water Standardization of Ion Chambers

A STANDARD GAMMA RAY IONIZATION CHAMBER FOR SHIELDING MEASUREMENTS

L. H. Ballweg and J. L. Meem

I. Introduction

The use of graphite wall ionization chambers for measuring gamma ray dosage is well known. An excellent resume of the subject with bibliography is given by Evans[1]. It was felt that with careful design an ionization chamber could be constructed which would measure the correct dosage with a minimum of uncertainty. Because of the importance of such measurements in shielding work, the construction of such a chamber was undertaken. This report describes the standard ionization and several other chambers now in use at the Bulk Shielding Facility. The usefulness of these chambers is not limited to shielding measurements. They may be used wherever an accurate determination of gamma ray ionization is required.

A series of four ion chambers having grid resistors varying from 10^6 through 10^{12} ohms was required to measure the attenuation of gamma rays at the Bulk Shielding Facility. The following chambers were designed and constructed by Roland K. Abele of the ORNL Instrument Department for use on these measurements.

(1) 50 cc 10^{12} Standard Chamber

(2) 900 cc 10^{12}

(3) 900 cc 10^{10}

(4) 50 cc Variable Resistor 10^6 - 10^{10}.

The 50 cc 10^{12} was designed to be as near as practical a point chamber and was chosen to be the standard ion chamber against which the other three ion chambers listed above could be standardized. The report describes the air calibration of the standard chamber and the subsequent standardization of the remaining chambers.

The standard chamber was first calibrated against a radium source using air at atmospheric pressure in the measuring volume of the chamber since the definition of a roentgen as defined at the Radiological Congress at Chicago in 1937 is "that quantity of X or gamma radiation such that the associated corpuscular emission per 0.001292 gm of air produces, in air, ions carrying one electrostatic unit of quantity of electricity of either sign".

1. Evans, Robley D., Nucleonics I, p 32, 1947.

It was necessary to later replace the air in the chambers with carbon dioxide to eliminate the possibility of the (n,p) reaction of nitrogen producing secondary ionization within the chamber during shielding experiments. Several experiments were run with air and carbon dioxide to determine the factor necessary to correct the readings taken with carbon dioxide. The air and carbon dioxide in the chamber were maintained under 10 pounds pressure to keep the chamber waterproof when measuring under 20 ft. of water.

II. Apparatus

The chambers were designed and constructed by Roland K. Abele. A description, written by Mr. Abele, of the 50 cc standard chamber is contained in Appendix A. Figs. 1 and 2 are photographs of the standard chamber and the 900 cc chamber respectively. Appendixes E and F are assembly prints of the standard and 900 cc chambers respectively.

The effective volume of the standard chamber was obtained by measuring the dimensions of the actual chamber and was calculated to be 50.89 cc. Since the 50 cc variable chamber was of the same construction as the standard chamber, the same volume was used. The effective volume of the 900 cc chamber was determined by utilizing the dimensions taken from the assembly prints and was calculated to be 891 cc.

Each chamber is equipped with a modified Q-826 electrometer designed by F. M. Glass of the ORNL Instrument Department[2]. Each chamber having its separate electrometer permits power to be maintained on the chamber and electrometer at all times, thereby eliminating the warm-up period required before the chambers can be used.

The electrometer uses two matched triode vacuum tubes in a bridge circuit. The zero adjust, a 20 K helipot, varies the D.C. potential applied to the control grid of one tube and is used to eliminate unbalances in the circuit due to tube aging, grid current, and background radiation. The course and fine null indicators, a 20 microampere D.C. meter, and a Rubicon galvanometer are connected between the triode plates.

Ionization current through the high megohm resistor produces a D.C. voltage at the grid of the input triode and an unbalance in the bridge circuit. The reference voltage, of opposite polarity to the signal voltage and in series with it, is adjusted to cancel exactly the unbalance due to radiation, i.e., to give a null on the galvanometer. The reference voltage is then equal in magnitude to the signal voltage and measurement of it together with the high megohm resistance value indicates the ionization current from the chamber. Figs. 3 and 4 are sketches of the electrometer and reference voltage circuits respectively.

---

2. Glass, F. M., "A Simple Low Drift Electrometer", ORNL-486.

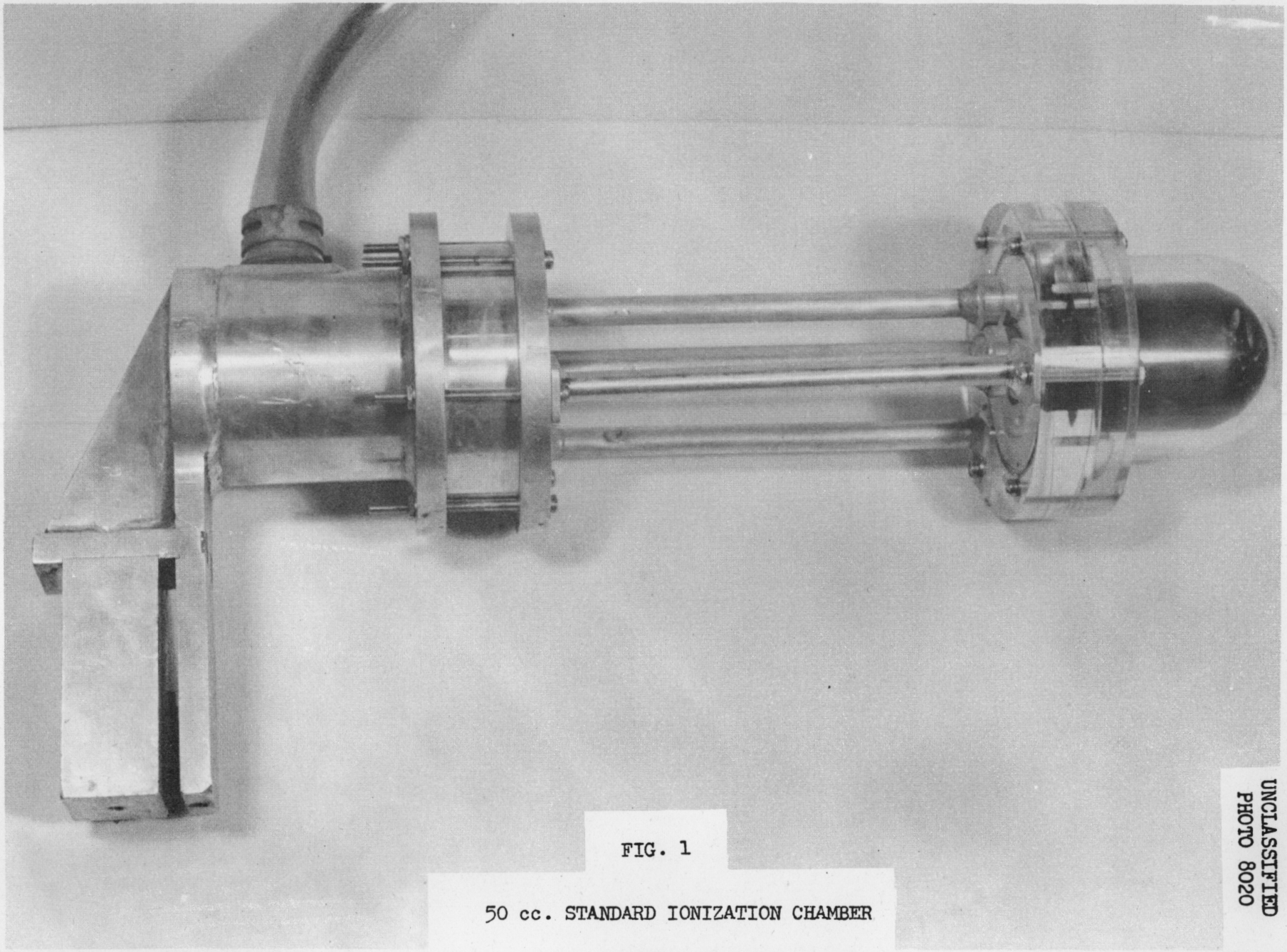

UNCLASSIFIED
PHOTO 8020

FIG. 1

50 cc. STANDARD IONIZATION CHAMBER

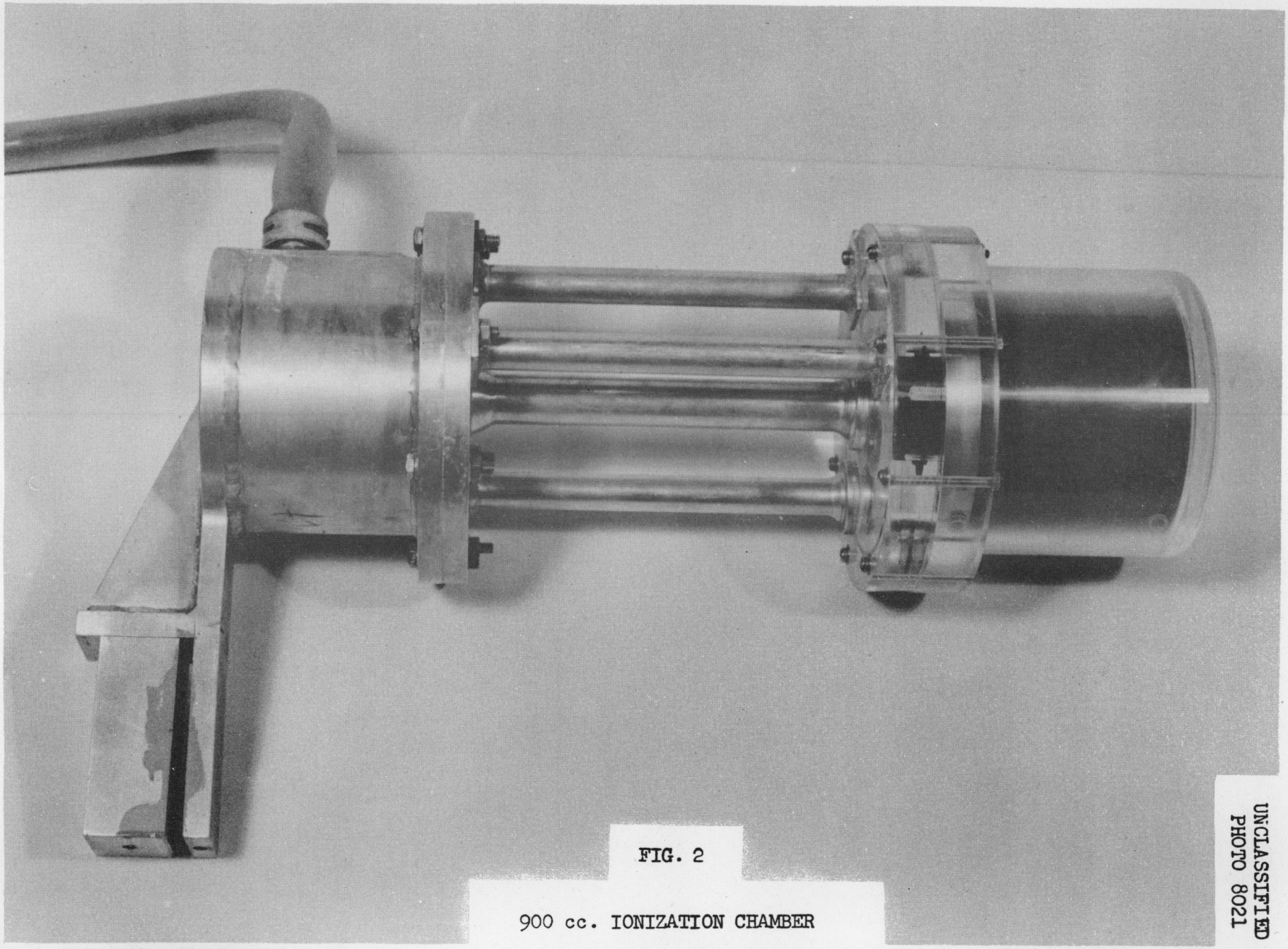

UNCLASSIFIED
PHOTO 8021

FIG. 2

900 cc. IONIZATION CHAMBER

UNCLASSIFIED
DWG. 11026

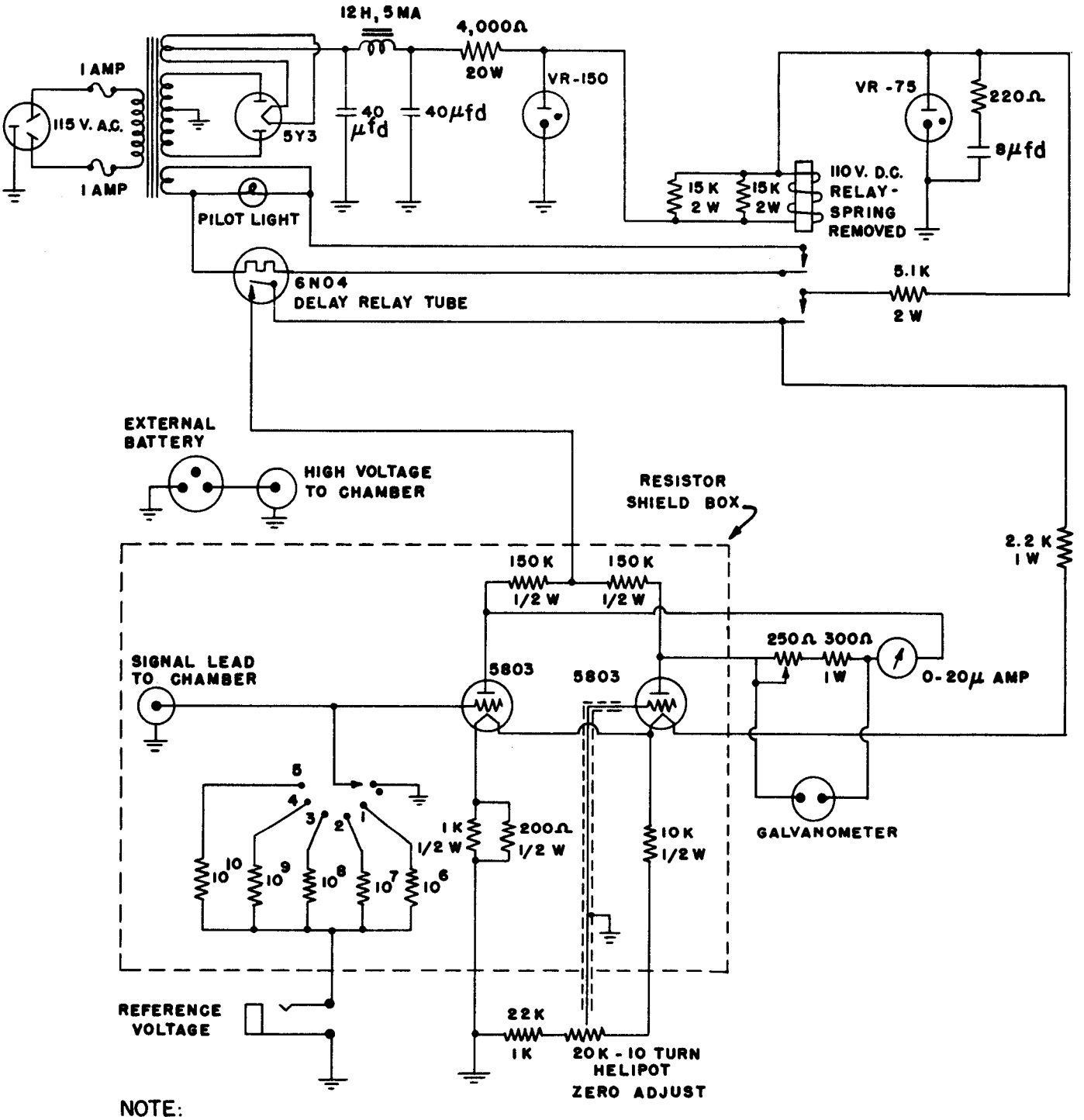

NOTE:

THE HIGH MEGOHM RESISTOR, THE INPUT 5803 TUBE, AND ITS ASSOCIATED PLATE AND FILAMENT RESISTORS ARE LOCATED IN THE CHAMBER HOUSING IN THE 900 cc - 10^{12}, 900 cc - 10^{10}, AND 50 cc - 10^{12} CHAMBERS.

FIG. 3

LOW DRIFT A.C. ELECTROMETER CIRCUIT

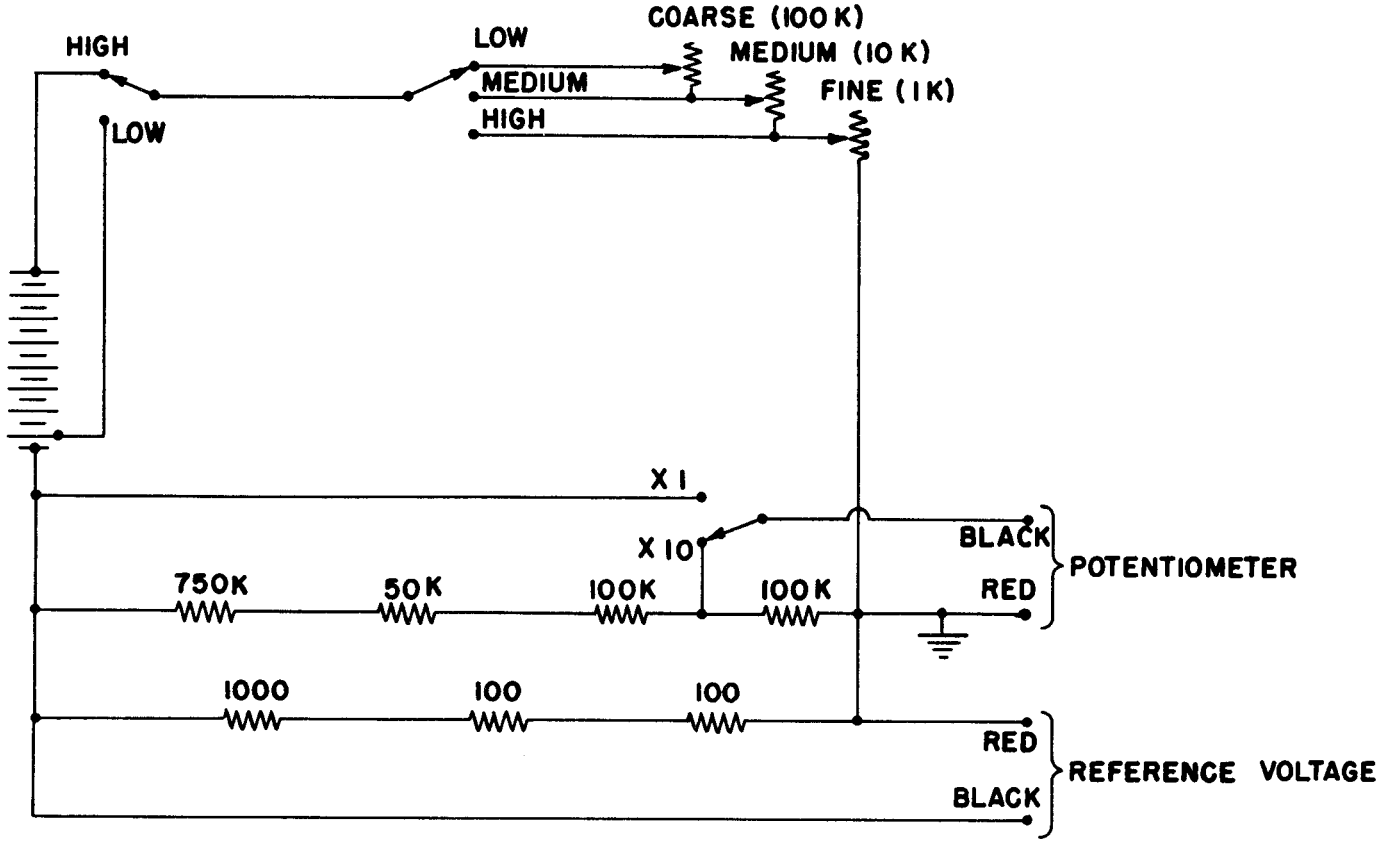

FIG. 4

REFERENCE VOLTAGE CIRCUIT FOR ELECTROMETER

The inlet and outlet pressures of the air or CO_2 in the chambers were measured with mercury manometers and the atmospheric pressure with a mercury barometer.

Special equipment was constructed for the calibration so that the chamber and source would be located at a sufficient distance from the walls, floor and ceiling to eliminate scattered radiation. The chamber was mounted on top of a 12-ft. wooden pole. To support the source, a 1/2 in. x 1/2 in. steel bar was attached perpendicular to the pole at a distance of 3 ft. from the chamber. A steel tape was attached to the bar for measuring distances between chamber and source. A second steel rod was mounted on the horizontal rod parallel to the wooden pole. The mounting was adjustable so that the source could be secured on the free end of the rod in a position directly in line with the axis of the chamber. A lucite mounting was used to secure the source to the rod. This equipment was placed in the center of the room so that the closest source of scattered radiation would be the floor 12 ft. from the source. Fig. 5 is a sketch of the equipment used.

The source used for the calibration of the Standard Chamber was ORNL Source No. E-863, which consisted of 484.5 mg. of radium enclosed in a monel cylinder of 1.5 mm thickness. This source was calibrated by the National Bureau of Standards on December 11, 1950. The intensity at 1 cm. was calculated by applying a correction factor for the monel and was found to be 4070 r/hr at 1 cm.

For subsequent underwater calibration of the remaining chambers, a Co^{60} source was utilized. The source was contained in an aluminum chamber which was made watertight by use of a rubber gasket and an aluminum screw top. The bottom of the source chamber was fitted with two guide pins which fit into two holes in the source mounting so that positioning of the source could be repeated with accuracy.

III. Air Calibration of Standard Chamber Against Radium Source

The center of detection of the chamber was calculated by assuming that the photons were collimated so that the geometric center of the air volume enclosed by the outer graphite shell and the collecting electrode would be equal to the center of detection of the chamber. This was found to be 4.6 cm. from the end of the lucite shell.

The average thicknesses of the lucite and graphite shells which the photons must penetrate were calculated, and a correction factor was determined for the attenuation of the gamma rays by the calculated thickness of walls from data obtained from W. V. Mayneard and J. E. Roberts, British Journal of Radiology, May 1937. This correction factor was found to be 1.084.

The radium source was set up on the axis of the chamber at 100 cm. and 50 cm. from the center of sensitivity of the chamber and a number of measurements

UNCLASSIFIED
DWG. 11028

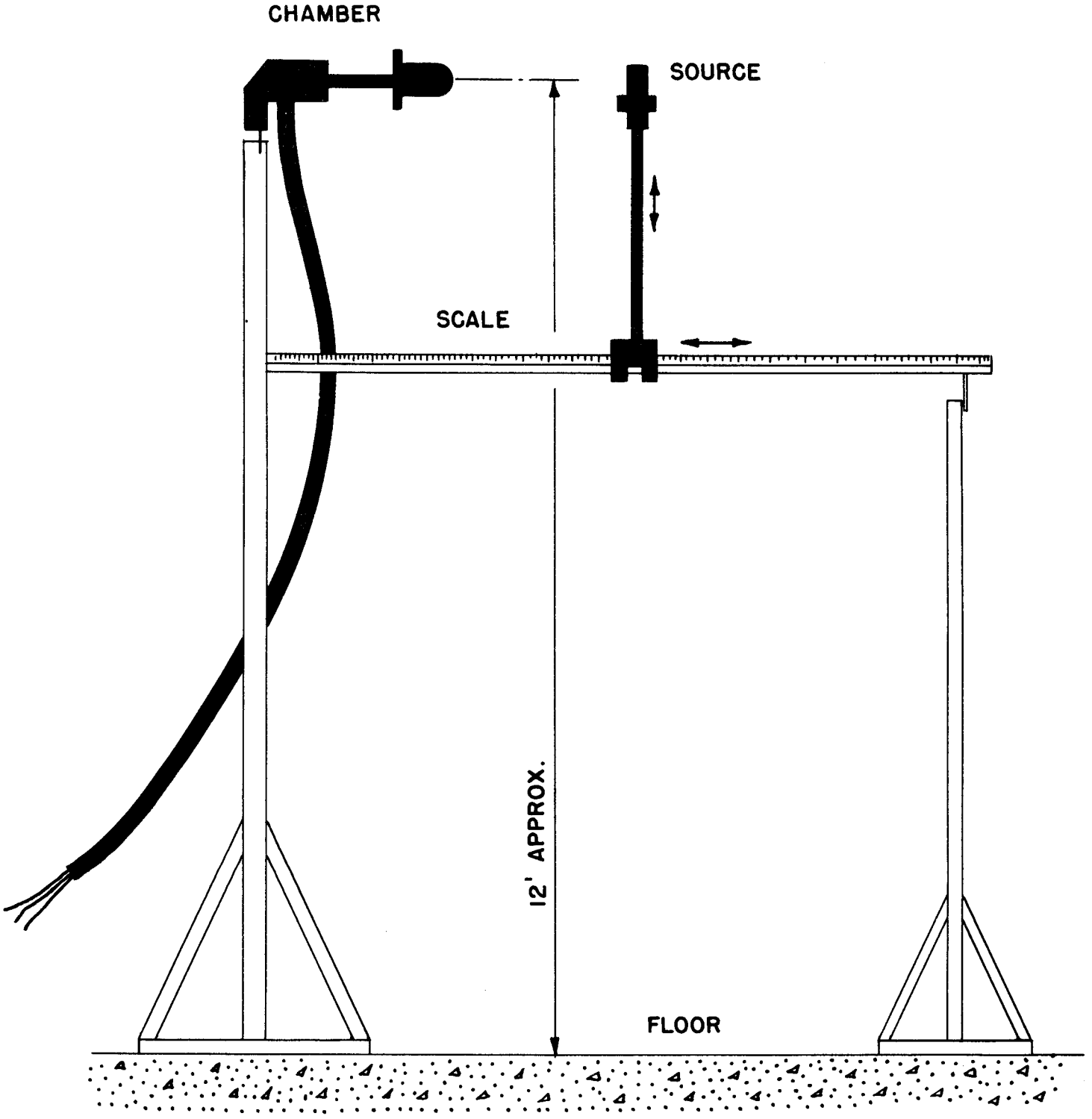

FIG. 5
CHAMBER AIR CALIBRATION STAND

of the gamma radiation were made at these two positions. The first set of measurements was made with air at atmospheric pressure in the chamber and the second with air under ten pounds pressure.

The radiation in roentgen per hour (r/hr) was calculated using the following formula:

$$R/V = \frac{1}{(.926 \times 10^{-13})(\text{Vol.})\left(\frac{P}{29.92}\right)\left(\frac{273}{T}\right)(\text{Res.})}$$

R/V = roentgen per hour per volt.

where: Vol. = effective volume, measured to be 50.89 cc for standard chamber.

$\frac{273}{T}$ = correction for temperature.

$\frac{P}{29.92}$ = correction for pressure.

$P = \frac{\text{inlet pressure} + \text{outlet pressure}}{2} + \text{atmospheric pressure.}$

Res. = value of grid resistor.

$.926 \times 10^{-13}$ = amps/cc standard air obtained from 1 r/hr of radiation.

Radiation in r/hr = (R/V x (Reference Voltage).

The following are the data and calculations of the intensities of radiation as measured at the two positions.

Calibration with Air in Chamber at Atmospheric Pressure

Air Temperature 24°C Atmospheric Pressure 29.40" Hg.

Distance Source to Chamber	Potentiometer Readings	R/V	r/hr	Shell Correction Factor	Corrected r/hr	Calculated r/hr
100 cm	1.619	.2296	.3717	1.084	.403	.407
50 cm	6.597	.2296	1.515	1.084	1.642	1.628

Calibration with Air in Chamber at Approximately 10 Pounds Pressure

Atmospheric Pressure 29.40" Hg. Outlet Pressure 19.91" Hg.

Inlet Pressure 20.11" Hg. Air Temperature 24°C

Distance Source to Chamber	Potentiometer Reading	R/V	r/hr	Shell Correction Factor	Corrected r/hr	Calculated r/hr
100 cm	2.722	.1366	.3718	1.084	.403	.407
50 cm	11.065	.1366	1.511	1.084	1.637	1.628

The calculated r/hr was obtained by applying the inverse square law to the data obtained from the National Bureau of Standards for the source. Fig. 6 is a graph of the result obtained in the calibration.

The measured values in terms of roentgen per hour agree with calculations within 1%.

IV. Description of Water Calibration Methods

A cylindrical water tank 5 ft. in diameter and 6.5 ft. high was used in the standardization of the remaining chambers against the standard chamber. The equipment consisted of an aluminum arm to hold the source securely in place on the axis of the tank about 3 ft. from the bottom. The chambers were mounted on a movable arm which could be adjusted to hold the chamber at 10 cm. intervals from the source. Fig. 7 is a sketch of the water tank.

The center of detection of the chambers was calculated for the water measurements by H. E. Hungerford[3] to be on the axis of the chambers at a distance of 2.0 cm. from the end of the lucite in the case of the 50 cc. chambers and of 2.95 cm. for the 900 cc. chambers.

The average thickness of the graphite for each chamber was calculated and correction factors were determined from data obtained from Mayneard and Roberts. The correction factors are 1.047 for the 50 cc. chambers and 1.116 for the 900 cc. chambers. Since the lucite is very similar to water radiation-wise, a correction was not necessary for the outer shell.

3. Hungerford, H. E., Center of Detection Calculation for the Neutron Counters and Ion Chambers Used at the Bulk Shielding Facility, ORNL C.F. 51-5-177.

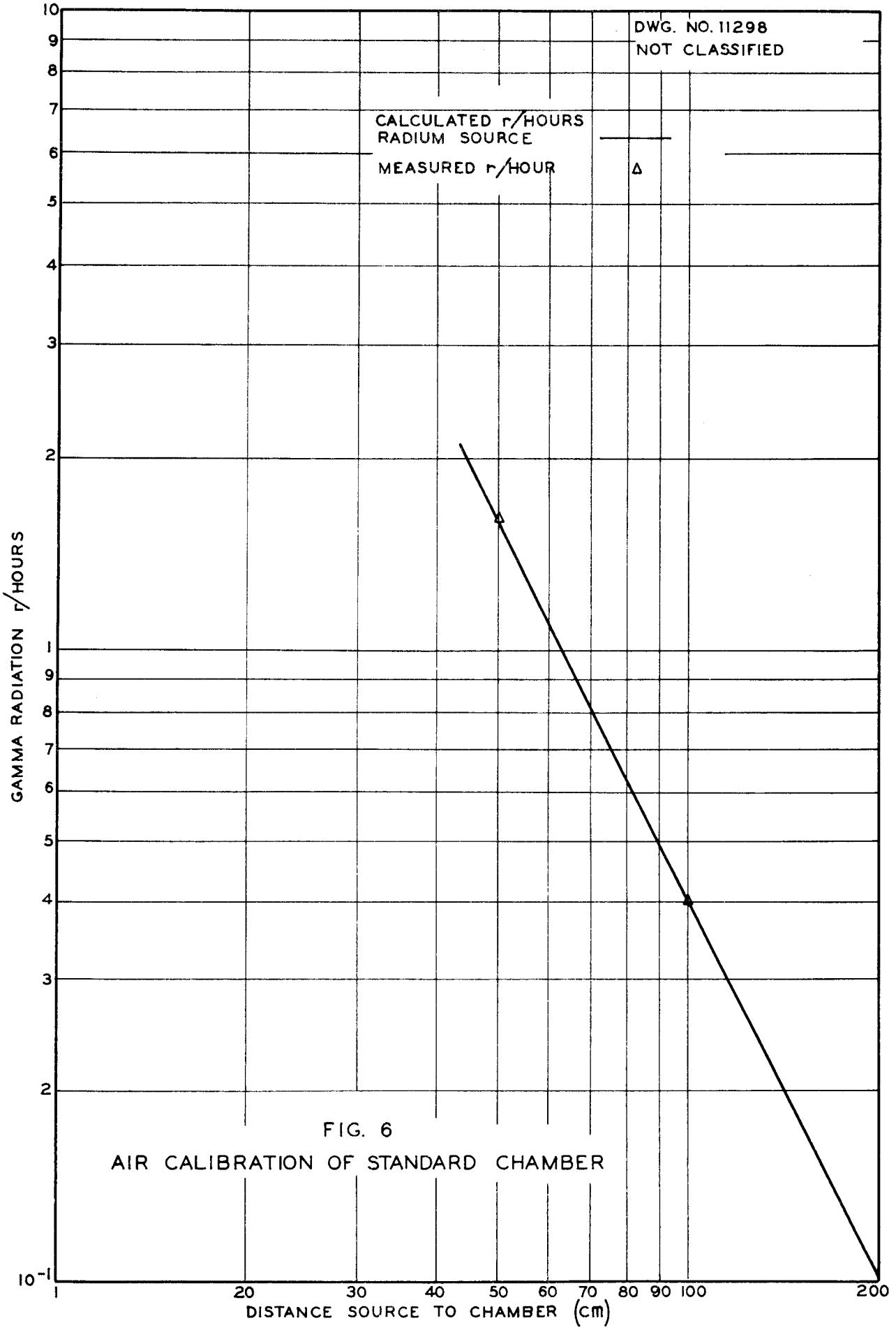

FIG. 6

AIR CALIBRATION OF STANDARD CHAMBER

UNCLASSIFIED
DWG. 11030

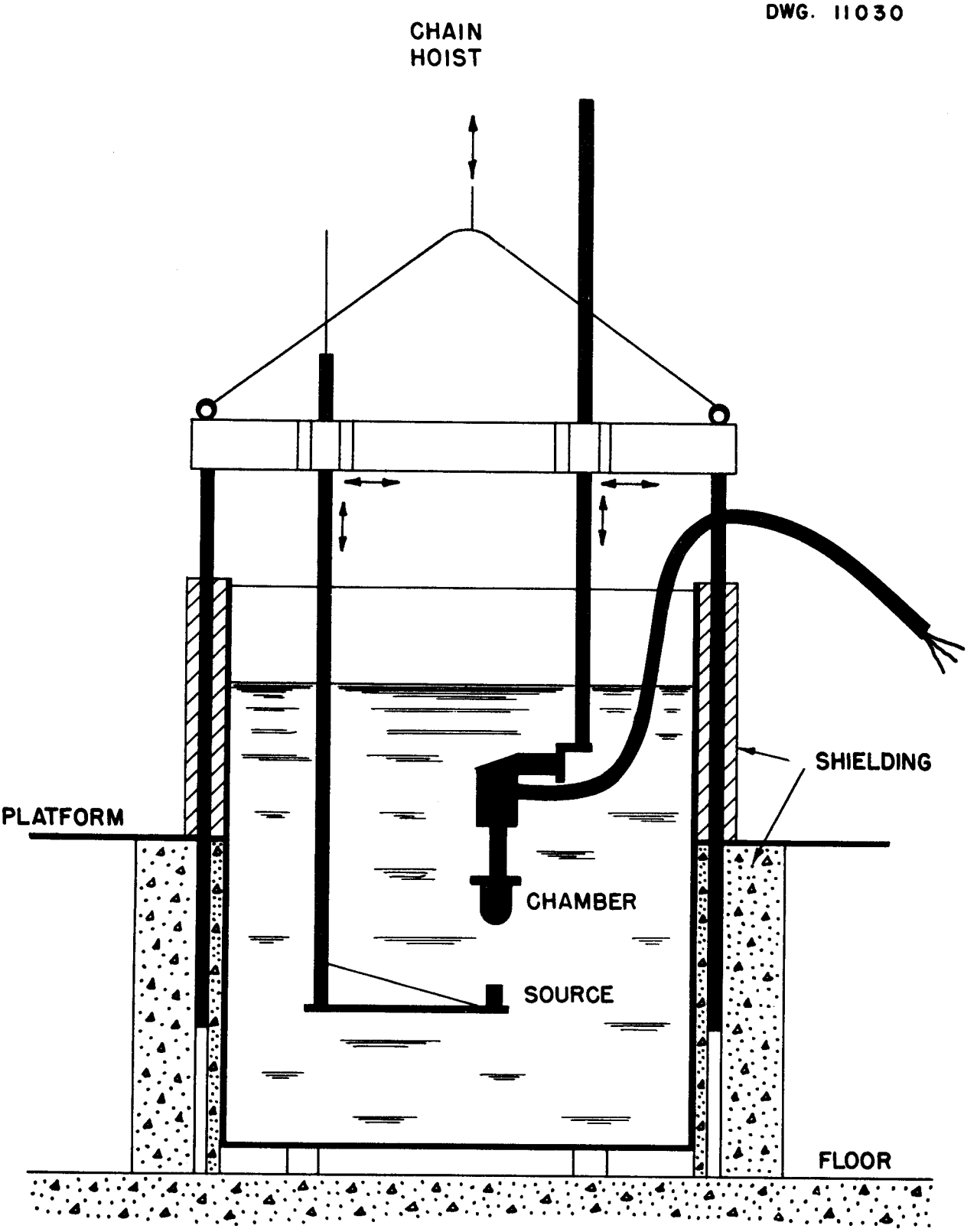

FIG. 7

CHAMBER WATER CALIBRATION TANK

V. Effect of Using Carbon Dioxide in the Chambers

Since it was decided best to use dry carbon dioxide in the chambers for shielding measurements, it was necessary to determine the correction factor to be applied to the following expression used in the calculation of r/hr.

$$1 \text{ r/hr} = 0.926 \times 10^{-13} \text{ amps/cc standard air}$$

To determine this correction factor, a series of measurements were made using alternately dry air and carbon dioxide in the standard, the 50 cc. variable and 10^{10}, 900 cc. chambers. The measurements were made in the water tank against the Co^{60} source previously described. The data and calculations obtained from these measurements may be found in Appendix B. The following is a summary of the data.

Chamber	Correction Factor
10^{10} 900 cc.	0.645
10^{10} 900 cc.	0.648
10^{12} Standard	0.639
10^{12} Standard	0.647
10^{10} 50 cc. Variable	0.640
Average	0.644

$$1 \text{ r/hr} = \frac{0.926 \times 10^{-13}}{(.644)} = 1.438 \times 10^{-13} \text{ amp/cc standard } CO_2$$

This correction is necessary because of the difference in density of air and carbon dioxide. The specific gravity of carbon dioxide was calculated by using the above correction factor to be 1.553 compared to 1.0 for air. The specific gravity of CO_2 as listed in the Handbook of Chemistry and Physics is 1.529 an agreement within 1.6%.

To further check the correction factor for carbon dioxide, another air calibration of the Standard Chamber was made using the radium source previously described except that CO_2 replaced the air in the chamber. The procedure used was identical to that described before. The following are the data and calculations of the intensities of gamma radiation as measured at three distances.

CO_2 Inlet Pressure on Chamber	19.73" Hg.
CO_2 Outlet Pressure on Chamber	19.63" Hg.
Atmospheric Pressure	29.18" Hg.
Air Temperature	29°C

Standard Radium Source

Distance Source to Chamber	Potentiometer Reading	R/V	r/hr.	Shell Correction Factor	Corrected r/hr.	Calculated r/hr.
100 cm.	4.199	.09049	.380	1.084	.412	.407
150 cm.	1.870	.09049	.169	1.084	.183	.181
200 cm.	1.0381	.09049	.094	1.084	.102	.102

Fig. 8 is a graph of the results obtained. The measurements agree with the calculated r/hr for the source within 1.2% at 100 cm., 1.1% at 150 cm. and exactly at 200 cm.

VI. Calibration of Co^{60} Source

The strength of the Co^{60} source was determined by measurements in air of the radiation emitted by the source at distances of 100 and 200 cm. from the center of sensitivity of the standard chamber. The equipment previously used to calibrate the standard chamber was utilized for these measurements.

The following are the data and calculations of the gamma radiation as measured at the two positions on March 7, 1951.

CO_2 Inlet Pressure	19.73" Hg.
CO_2 Outlet Pressure	19.63" Hg.
Atmospheric Pressure	29.18" Hg.
Air Temperature	29°C

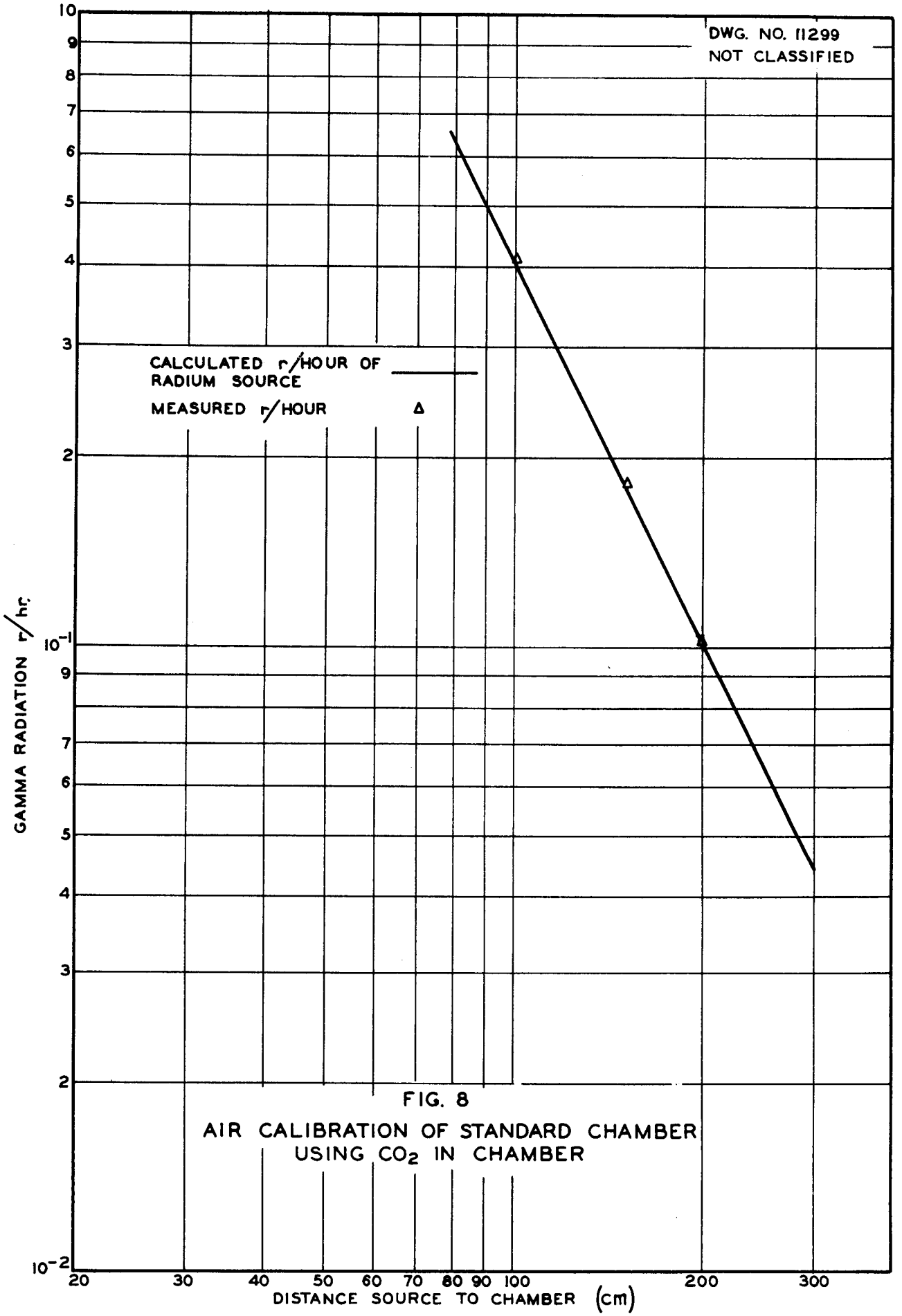

FIG. 8

AIR CALIBRATION OF STANDARD CHAMBER USING CO_2 IN CHAMBER

Distance Source to Chamber	Potentiometer Reading	R/V	r/hr	Correction Factor	Corrected r/hr
100 cm	10.974	.09049	.993	1.084	1.076
200 cm	2.738	.09049	.248	1.084	0.269

Co^{60} emits one 1.1 and one 1.3 Mev photon per disintegration. Absorption coefficients (excluding scattering) are 3.53×10^{-5} and 3.41×10^{-5} per cm. of air at $0^{o}C$ and 760 mm. Hg., respectively. (See p 11 of Reference 1).

$$1 \text{ curie } Co^{60} = \frac{(1.1 \times 3.53 \times 10^{-5} + 1.3 \times 3.41 \times 10^{-5})(3.7 \times 10^{10})(3600)}{4\pi(100^2)(6.77 \times 10^4)} = 1.30 \text{r/hr at 1 meter}$$

The Co^{60} source produced 1.076 r/hr and 0.269 r/hr at 1 and 2 meters respectively. The strength of the source was thus:

$$\frac{1.076}{1.30} = 0.828 \text{ curies of } Co^{60}$$

$$\frac{0.269}{.325} = 0.828 \text{ curies of } Co^{60}$$

VII. Determination of Attenuation Curve in Water Tank Using Co^{60} Source and Standard Chamber

Seven series of measurements were made in the water tank using the Co^{60} source and the standard chamber to measure the attenuation of the gamma rays in water. The data and calculations of these measurements may be found in Appendix C. Following is a summary of the data obtained from these runs.

Distance Source to Chamber	#1	#2	#3	#4	#5	#6	#7	Average
97.4 cm	.024	.022	.022	.024	.024	.026	.026	.024
87.4 cm	.050	.047	.048	.049	.048	.052	.052	.049
77.4 cm	.102	.101	.103	.104	.105	.106	.106	.104
67.4 cm	.222	.214	.219	.220	.219	.224	.225	.220
57.4 cm	.479	.467	.477	.473	.478	.475	.482	.476
47.4 cm	1.079	1.057	1.084	.1089	-	1.063	1.081	1.072

Fig. 9 is a graph of the average r/hr against distance from above table.

VIII. Calibration of 10^{10} and 10^{12} 900 cc. and 50 cc. Variable Chambers

Each of the three ionization chambers which were to be used for measuring gamma radiation emitted at the Bulk Shielding Facility were standardized in the water tank using the Co^{60} source. The following tables are a summary of the data obtained from the standardization runs. For complete data and calculations of these measurements see Appendix D.

Fig. 10 is a graph showing the agreement of the measurements taken in water against the Co^{60} source with the four ion chambers.

UNCLASSIFIED
DWG. 11032

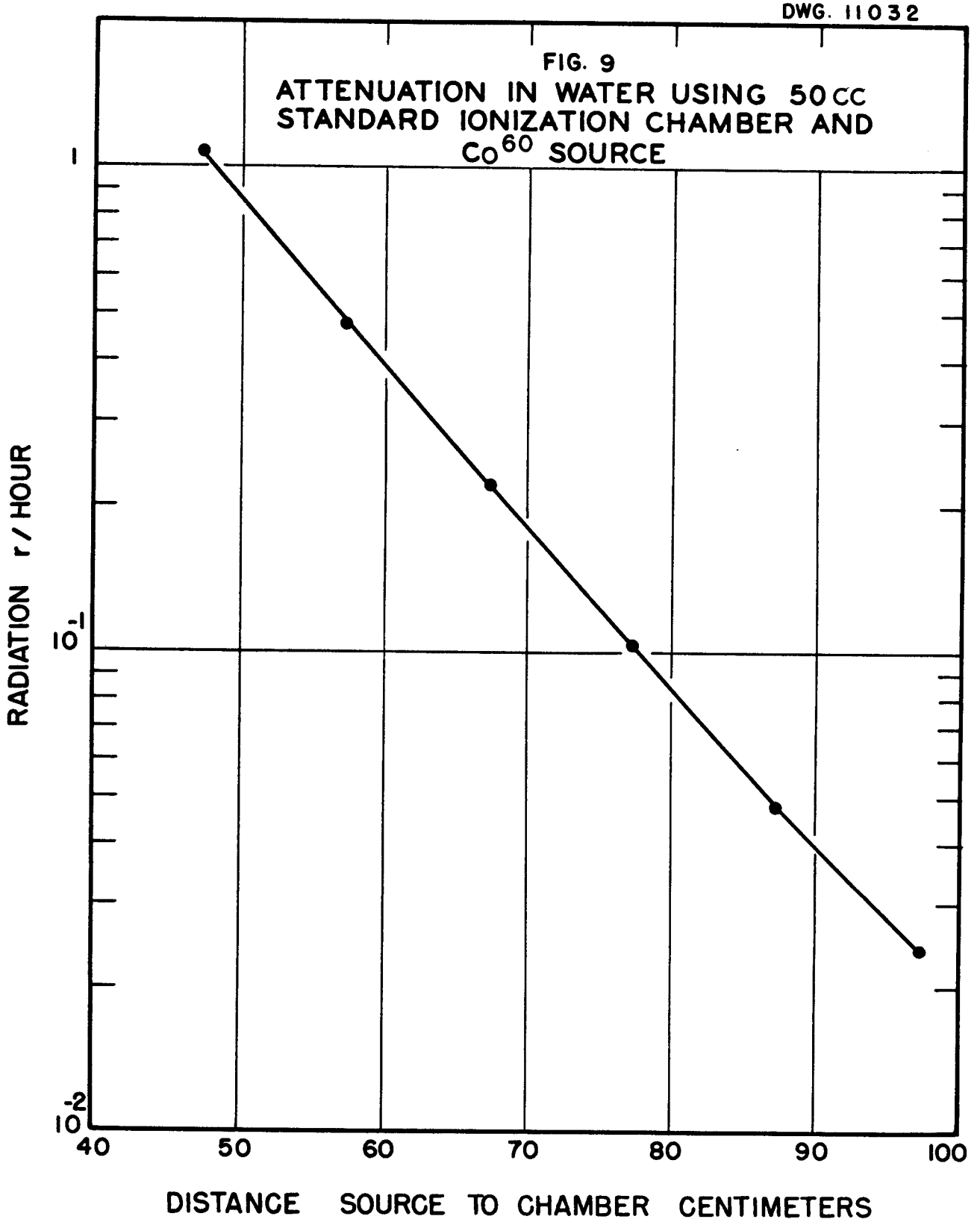

FIG. 9
ATTENUATION IN WATER USING 50 CC STANDARD IONIZATION CHAMBER AND Co^{60} SOURCE

UNCLASSIFIED
DWG. 11033

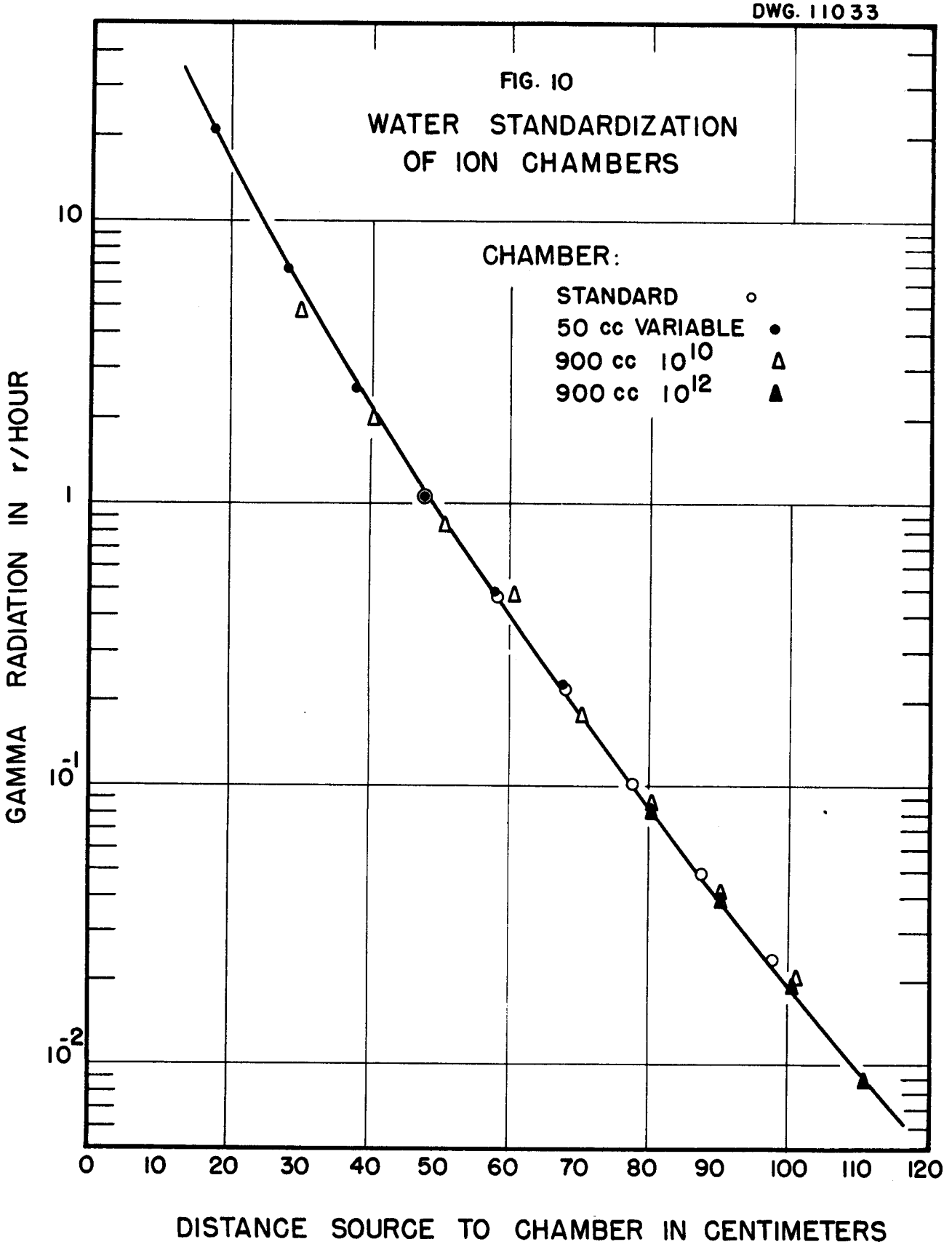

50 cc. Variable Ion Chamber

Distance Source to Chamber	r/hr #1	#2	#3	Average
67.4 cm	.228	.230	.233	.230
57.4 cm	.481	.485	.484	.483
47.4 cm	1.068	1.069	1.073	1.070
37.4 cm	2.540	2.536	2.542	2.539
27.4 cm	6.710	6.639	6.657	6.668
17.4 cm	21.141	21.098	21.223	21.154

10^{12} 900 cc. Ion Chamber

Distance Source to Chamber	r/hr #1	#2	#3	Average
110.55 cm	-	.010	.010	.010
100.55 cm	-	.020	.020	.020
90.55 cm	.040	.041	.040	.040
80.55 cm	.082	.084	.085	.084

10^{10} 900 cc. Ion Chamber

Distance Source to Chamber	r/hr #1	#2	#3	Average
100.55 cm	.020	.020	.020	.020
90.55 cm	.041	.040	.042	.041
80.55 cm	.090	.086	.088	.088
70.55 cm	.177	.179	.183	.180
60.55 cm	.382	.386	.396	.388

10^{10} 900 cc. Ion Chamber (Con't.)

Distance Source to Chamber	r/hr #1	#2	#3	Average
50.55 cm	.846	.858	.882	.862
40.55 cm	1.948	1.997	2.014	1.986
30.55 cm	4.826	4.906	5.005	4.912

APPENDIX A

Description of Design of Standard Chamber

Roland K. Abele

For gamma measurements in the Bulk Shielding Facility, it was decided that two sizes of gamma ion chambers would be required to cover the desired range of radiation intensities. One chamber of small volume was to serve as a secondary standard as well as to permit measurements in intense radiation fields. The chamber of small volume, desirably a point chamber, was to be used to calibrate the other chambers.

The fact that these chambers were to be used under water was an influence on the size of the smaller chamber ($\sim$ 50 cc. volume). This underwater feature made a vacuum tube electrometer seem to be the most practical small current measuring device. The current sensitivity of this device, plus the quantity of radiation available for calibration purposes, plus the quantity of radiation of sources to be calibrated, made a 50 cc. volume seem desirable. Even with a volume of 50 cc. in mind, the total physical dimensions were chosen large enough so that the field between the collecting and accelerating electrodes would approach that of a parallel plate chamber and that their spacing be small enough so saturation could be accomplished even in intense radiation fields.

This chamber, a combination of hemispherical and cylindrical shapes, was thought to be easier to fabricate than a spherical chamber and would still constitute a non-directional device for the measurements. The guard electrode, of the same material and the same diameter as that of the collecting electrode, was separated from the collecting electrode by the smallest practical distance and extended far enough into the chamber so that the field at this point of separation would be nearly uniform. In addition, this would determine the extent of the collecting volume.

The choice of materials used also has significance. Materials of low slow neutron cross-section (the chamber is to be used in the presence of high neutron flux) and low Z were used. Graphite was used for the electrodes and guard ring, magnesium and aluminum where metal parts were necessary, polystyrene for the high impedance insulator, and Teflon for the high voltage insulator. Polystyrene was not used for the H.V. insulator as this insulator was exposed to the chamber. Here it would not have been good to use a material that could contribute to the ionization due to recoil protons. The chamber was housed in lucite to approximate the conditions of the water surrounding it, and the chamber housing separated from the electronics housing by a distance of 8 in. so that the entire chamber be surrounded by water (the medium in which the measurements were to be made).

For the original calibration of this chamber with a radium standard and the subsequent calibration of a Co^{60} source under water, it was necessary to place the high meg resistance (10^{12} Ω) and the electrometer tube near the chamber. This made the measuring time considerably less than that required with 50 ft. of signal cable and its capacitance of almost 700 $\mu\mu f$ between the chamber and the electrometer as normally used. This was accomplished by building a small housing that could be plugged into the signal connector in the housing immediately behind the chamber. The housing contained the high impedance part of the electrometer circuit (one electrometer tube and 10^{12} Ω resistor) and was filled with ceresin wax. A relay was mounted on one side of the housing so that the grid of the tube could be remotely grounded when desired. The filling of the housing with ceresin kept to a minimum the amount of spurious ionization current in this region.

APPENDIX B

Measurements for determination of correction factor to be applied to calculations of r/hr when using dry carbon dioxide in place of dry air in the ionization chambers.

10^{10} 900 cc. Chamber

Run #1

Measurements with Air

Atmospheric Pressure	29.49" Hg.	Outlet Pressure	20.48" Hg.
Inlet Pressure	20.75" Hg.	Water Temperature	14°C

$$R/V = \frac{1}{(.926 \times 10^{-13})(891)\left(\frac{50.11}{29.92}\right)\left(\frac{273}{287}\right)(.9950 \times 10^{10})} = 0.766$$

Distance Source to Chamber	Potentiometer Reading	R/V	r/hr	Graphite Correction Factor	Corrected r/hr
100.55 cm	.0227	.766	.017	1.16	.020
90.55 cm	.0456	.766	.035	1.16	.041
80.55 cm	.0970	.766	.074	1.16	.086
70.55 cm	.2026	.766	.155	1.16	.179
60.55 cm	.4345	.766	.333	1.16	.386
50.55 cm	.9660	.766	.740	1.16	.858
40.55 cm	2.248	.766	1.722	1.16	1.997
30.55 cm	5.521	.766	4.229	1.16	4.906

10^{10} 900 cc. Chamber

Run #1

Measurements with CO_2

Atmospheric Pressure	29.50" Hg.	Outlet Pressure	18.87" Hg.
Inlet Pressure	19.12" Hg.	Temperature	13.5°C

$$R/V = \frac{1}{(.926 \times 10^{13})(891)\left(\frac{48.56}{29.92}\right)\left(\frac{273}{286.5}\right)(.9950 \times 10^{10})} = 0.788$$

Distance Source to Chamber	Potentiometer Reading	R/V	r/hr	Graphite Correction Factor	Corrected r/hr
100.55 cm	.0333	0.788	.026	1.16	.030
90.55 cm	.0705	0.788	.055	1.16	.064
80.55 cm	.1465	0.788	.115	1.16	.133
70.55 cm	.3087	0.788	.243	1.16	.282
60.55 cm	.6638	0.788	.523	1.16	.607
50.55 cm	1.453	0.788	1.145	1.16	1.328
40.55 cm	3.386	0.788	2.668	1.16	3.095
30.55 cm	8.341	0.788	6.573	1.16	7.625

Comparison of Measurements with Air and CO_2 Pressure - Run #1

Distance Source	Air Source	CO_2 Pressure	Ratio r/hr Air/CO_2
100.55 cm	.020	.030	.667
90.55 cm	.041	.064	.641
80.55 cm	.086	.133	.647
70.55 cm	.179	.282	.635
60.55 cm	.386	.607	.636
50.55 cm	.858	1.328	.646
40.55 cm	1.997	3.095	.645
30.55 cm	4.906	7.625	.643
		Average	.645

10^{10} 900 cc. Chamber

Run #2

Measurements with Air

Atmospheric Pressure	29.50" Hg.	Outlet Pressure	18.82" Hg.
Inlet Pressure	19.08" Hg.	Water Temperature	13°C

$$R/V = \frac{1}{(.926 \times 10^{-13})(891)\left(\frac{48.45}{29.92}\right)\left(\frac{273}{286}\right)(.9950 \times 10^{10})} = 0.787$$

Distance Source to Chamber	Potentiometer Reading	R/V	r/hr	Graphite Correction Factor	Correction r/hr
100.55 cm	.0221	0.787	.017	1.16	.020
90.55 cm	.0460	0.787	.036	1.16	.042
80.55 cm	.0964	0.787	.076	1.16	.088
70.55 cm	.2011	0.787	.158	1.16	.183
60.55 cm	.4337	0.787	.341	1.16	.396
50.55 cm	.9655	0.787	.760	1.16	.882
40.55 cm	2.206	0.787	1.736	1.16	2.014

Run #2

Measurements with CO_2

Atmospheric Pressure	29.50" Hg.	Outlet Pressure	19.05" Hg.
Inlet Pressure	19.30" Hg.	Water Temperature	13°C

$$R/V = \frac{1}{(.926 \times 10^{-13})(891)\left(\frac{48.67}{29.92}\right)\left(\frac{273}{286}\right)(.9950 \times 10^{10})} = 0.783$$

Distance Source to Chamber	Potentiometer Reading	R/V	r/hr	Graphite Correction	Corrected r/hr
100.55 cm	.0337	0.783	.026	1.16	.031
90.55 cm	.0718	0.783	.056	1.16	.065
80.55 cm	.1507	0.783	.118	1.16	.137
70.55 cm	.3120	0.783	.244	1.16	.283
60.55 cm	.6733	0.783	.527	1.16	.611
50.55 cm	1.484	0.783	1.162	1.16	1.348
40.55 cm	3.395	0.783	2.658	1.16	3.083

Comparison of Measurements with Air and CO_2

Run #2

Distance Source to Chamber	Air r/hr	CO_2 r/hr	Ratio r/hr of air/CO_2
100.55 cm	.020	.031	.645
90.55 cm	.042	.065	.646
80.55 cm	.088	.137	.642
70.55 cm	.183	.283	.647
60.55 cm	.396	.611	.648
50.55 cm	.882	1.348	.654
40.55 cm	2.014	3.083	.653
		Average	.648

50 cc. 10^{12} Standard

Run #3

Measurements with Air

Atmospheric Pressure	29.66" Hg.	Outlet Pressure	21.42" Hg.
Inlet Pressure	21.51" Hg.	Water Temperature	13.5°C

$$R/V = \frac{1}{(.926 \times 10^{-13})(50.89)\left(\frac{51.12}{29.92}\right)\left(\frac{273}{286.5}\right)(1.023 \times 10^{12})} = 0.127$$

Distance Source to Chamber	Potentiometer Reading	R/V	r/hr	Graphite Correction	Corrected r/hr
97.4 cm	0.1839	.127	.023	1.047	.024
87.4 cm	0.3736	.127	.047	1.047	.049
77.4 cm	0.7806	.127	.099	1.047	.104
67.4 cm	1.653	.127	.210	1.047	.220
57.4 cm	3.555	.127	.452	1.047	.423

Run #3

Measurement with CO_2

Water Temperature	13.5°C	Outlet Pressure	21.36" Hg.
Inlet Pressure	21.52" Hg.	Atmospheric Pressure	29.68" Hg.

$$R/V = \frac{1}{(.926 \times 10^{-13})(50.89)\left(\frac{51.12}{29.92}\right)\left(\frac{273}{286.5}\right)(1.023 \times 10^{12})} = .127$$

Distance Source to Chamber	Potentiometer Reading	R/V	r/hr	Graphite Correction	Corrected r/hr
97.4 cm	.2771	.127	.035	1.047	.037
87.4 cm	.5665	.127	.072	1.047	.075
77.4 cm	1.215	.127	.154	1.047	.161
67.4 cm	2.545	.127	.323	1.047	.338
57.4 cm	5.576	.127	.708	1.047	.741

Run #3

Comparison of Measurements with Air and CO_2

Distance Source to Chamber	Air r/hr	CO_2 r/hr	Ratio r/hr Air/CO_2
97.4 cm	.024	.037	.649
87.4 cm	.049	.075	.653
77.4 cm	.104	.161	.646
67.4 cm	.220	.338	.651
57.4 cm	.473	.741	.638
		Average	.647

50 cc. Standard

Run #4

Measurements with Air (Reduced)

Atmospheric Pressure	29.74" Hg.	Outlet Pressure	13.88" Hg.
Inlet Pressure	14.02" Hg.	Water Temperature	13.5°C

$$R/V = \frac{1}{(.926 \times 10^{-13})(50.89)\left(\frac{43.69}{29.92}\right)\left(\frac{273}{286.5}\right)(1.023 \times 10^{12})} = 0.149$$

Distance Source to Chamber	Potentiometer Reading	R/V	r/hr	Graphite Correction	Corrected r/hr
97.4 cm	0.1703	0.149	.025	1.047	.026
87.4 cm	0.3377	0.149	.050	1.047	.052
77.4 cm	0.6775	0.149	.101	1.047	.106
67.4 cm	1.438	0.149	.214	1.047	.224
57.4 cm	3.044	0.149	.454	1.047	.475
47.4 cm	6.818	0.149	1.016	1.047	1.063

Run #4

Measurements with CO_2 (Reduced)

Atmospheric Pressure	29.74" Hg.	Outlet Pressure	13.82" Hg.
Inlet Pressure	13.98" Hg.	Water Temperature	13.5°C

$$R/V = \frac{1}{(.926 \times 10^{-13})(50.89)\left(\frac{43.64}{29.92}\right)\left(\frac{273}{286.5}\right)(1.023 \times 10^{12})} = 0.149$$

Distance Source to Chamber	Potentiometer Reading	R/V	r/hr	Graphite Correction	Corrected r/hr
97.4 cm	0.2603	0.149	.03878	1.047	.041
87.4 cm	0.5200	0.149	.0775	1.047	.081
77.4 cm	1.0520	0.149	.1567	1.047	.164
67.4 cm	2.235	0.149	.3330	1.047	.349
57.4 cm	4.782	0.149	.713	1.047	.747
47.4 cm	10.752	0.149	1.602	1.047	1.677

Run #4

Comparison of Measurements with Air and CO_2

Distance Source to Chamber	Air r/hr	CO_2 r/hr	Ratio r/hr Air/CO_2
97.4 cm	.026	.041	.634
87.4 cm	.052	.081	.642
77.4 cm	.106	.164	.646
67.4 cm	.224	.349	.642
57.4 cm	.475	.747	.646
47.4 cm	1.063	1.677	.634
		Average	.639

50 cc. 10^{10} Variable

Run #5

Measurements with Air

Atmospheric Pressure	29.34" Hg.	Outlet Pressure	19.38" Hg.
Inlet Pressure	19.68" Hg.	Water Temperature	13.5°C

$$R/V = \frac{1}{(.926 \times 10^{-13})(50.89)\left(\frac{273}{286.5}\right)\left(\frac{48.87}{29.92}\right)(1.003 \times 10^{10})} = 13.59$$

Distance Source to Chamber	Potentiometer Reading	R/V	r/hr	Graphite Correction	Corrected r/hr
67.4 cm	.0162	13.59	.220	1.047	.230
57.4 cm	.0341	13.59	.463	1.047	.485
47.4 cm	.0751	13.59	1.021	1.047	1.069
37.4 cm	.1782	13.59	2.422	1.047	2.536
27.4 cm	.4666	13.59	6.341	1.047	6.639
17.4 cm	1.4828	13.59	20.151	1.047	21.098

Run #5

Measurements with CO_2

Atmospheric Pressure	29.34" Hg.	Outlet Pressure	18.34" Hg.
Inlet Pressure	18.64" Hg.	Water Temperature	13.5°C

Distance Source to Chamber	Potentiometer Reading	R/V	r/hr	Graphite Correction	Corrected r/hr
67.4 cm	.0249	13.88	.346	1.047	.362
57.4 cm	.0517	13.88	.718	1.047	.752
47.4 cm	.1147	13.88	1.592	1.047	1.667
37.4 cm	.2716	13.88	3.770	1.047	3.947
27.4 cm	.7111	13.88	9.870	1.047	10.334
17.4 cm	2.268	13.88	31.480	1.047	32.960

$$R/V = \frac{1}{(.926 \times 10^{-13})(50.89)\left(\frac{273}{286.5}\right)\left(\frac{47.83}{29.92}\right)(1.003 \times 10^{10})} = 13.88$$

Run #5

Comparison Measurements with Air and CO_2

Distance Source to Chamber	Air r/hr	CO_2 r/hr	Ratio r/hr Air/CO_2
67.4 cm	.230	.362	.635
57.4 cm	.485	.752	.645
47.4 cm	1.069	1.667	.641
37.4 cm	2.536	3.947	.638
27.4 cm	6.639	10.334	.642
17.4 cm	21.098	32.960	.640
		Average	.640

APPENDIX C

The following are the measurements and the calculations of the water attenuation using the standard chamber and Co^{60} source.

Run #1

Atmospheric Pressure	29.32" Hg.	Air Outlet Pressure	19.95" Hg.
Air Inlet Pressure	20.15" Hg.	Water Temperature	14°C

$$R/V = \frac{1}{(.926 \times 10^{-13})(50.89)\left(\frac{49.37}{29.92}\right)\left(\frac{273}{287}\right)(1.023 \times 10^{12})} = 0.1322$$

Distance Source to Chamber	Potentiometer Reading	R/V	r/hr	Graphite Correction	Corrected r/hr
97.4 cm	.1766	.1322	.023	.1047	.024
87.4 cm	.3655	.1322	.048	.1047	.050
77.4 cm	.7432	.1322	.098	.1047	.102
67.4 cm	1.603	.1322	.212	.1047	.222
57.4 cm	3.470	.1322	.458	.1047	.479
47.4 cm	7.813	.1322	1.033	.1047	1.079

Run #2

Atmospheric Pressure	29.70" Hg.	Air Outlet Pressure	20.02" Hg.
Air Inlet Pressure	20.22" Hg.	Water Temperature	14.5°C

$$R/V = \frac{1}{(.926 \times 10^{-13})(50.89)\left(\frac{51.04}{29.92}\right)\left(\frac{273}{287.5}\right)(1.023 \times 10^{12})} = 0.128$$

Distance Source to Chamber	Potentiometer Reading	R/V	r/hr	Graphite Correction	Corrected r/hr
97.4 cm	.1640	0.128	.021	1.047	.022
87.4 cm	.3522	0.128	.045	1.047	.047
77.4 cm	.7495	0.128	.096	1.047	.101
67.4 cm	1.597	0.128	.204	1.047	.214
57.4 cm	3.485	0.128	.446	1.047	.467
47.4 cm	7.894	0.128	1.010	1.047	1.057

Run #3

Atmospheric Pressure	29.67" Hg.	Air Outlet Pressure	20.06" Hg.
Air Inlet Pressure	20.26" Hg.	Water Temperature	15°C

$$R/V = \frac{1}{(.926 \times 10^{-13})(50.89)\left(\frac{48.83}{29.92}\right)\left(\frac{273}{278}\right)(1.023 \times 10^{12})} = .131$$

Distance Source to Chamber	Potentiometer Reading	R/V	r/hr	Graphite Correction	Corrected r/hr
97.4 cm	.1637	.131	.021	1.047	.022
87.4 cm	.3481	.131	.046	1.047	.048
77.4 cm	.7454	.131	.098	1.047	.103
67.4 cm	1.595	.131	.209	1.047	.219
57.4 cm	3.482	.131	.456	1.047	.477
47.4 cm	7.903	.131	1.035	1.047	1.084

Run #4

Atmospheric Pressure	29.66" Hg.	Air Outlet Pressure	21.42" Hg.
Air Inlet Pressure	21.51" Hg.	Water Temperature	13.5°C

$$R/V = \frac{1}{(.926 \times 10^{-13})(50.89)\left(\frac{51.12}{29.92}\right)\left(\frac{273}{286.5}\right)(1.023 \times 10^{12})} = 0.127$$

Distance Source to Chamber	Potentiometer Reading	R/V	r/hr	Graphite Correction	Corrected r/hr
97.4 cm	.1839	.127	.023	1.047	.024
87.4 cm	.3736	.127	.047	1.047	.049
77.4 cm	.7806	.127	.099	1.047	.104
67.4 cm	1.653	.127	.210	1.047	.220
57.4 cm	3.555	.127	.452	1.047	.473
47.4 cm	8.036	.127	1.021	1.047	1.069

Run #5

Atmospheric Pressure	29.68" Hg.	CO_2 Outlet Pressure	21.36" Hg.
CO_2 Inlet Pressure	21.52" Hg.	Water Temperature	13.5°C

$$R/V = \frac{1}{(1.438 \times 10^{-13})(50.89)\left(\frac{51.12}{29.92}\right)\left(\frac{273}{286.5}\right)(1.023 \times 10^{12})} = .0820$$

Distance Source to Chamber	Potentiometer Reading	R/V	r/hr	Graphite Correction	Corrected r/hr
97.4 cm	.2771	.0820	.023	1.047	.024
87.4 cm	.5665	.0820	.046	1.047	.048
77.4 cm	1.215	.0820	.100	1.047	.105
67.4 cm	2.545	.0820	.209	1.047	.219
57.4 cm	5.576	.0820	.457	1.047	.478

Run #6

Atmospheric Pressure	29.74" Hg.	Air Outlet Pressure	13.88" Hg.
Air Inlet Pressure	14.02" Hg.	Water Temperature	13.5°C

$$R/V = \frac{1}{(.926 \times 10^{-13})(50.89)\left(\frac{43.69}{29.92}\right)\left(\frac{273}{286.5}\right)(1.023 \times 10^{12})} = 0.149$$

Distance Source to Chamber	Potentiometer Reading	R/V	r/hr	Graphite Correction	Corrected r/hr
97.4 cm	.1703	0.149	.025	1.047	.026
87.4 cm	.3377	0.149	.050	1.047	.052
77.4 cm	.6775	0.149	.101	1.047	.106
67.4 cm	1.438	0.149	.214	1.047	.224
57.4 cm	3.044	0.149	.454	1.047	.475
47.4 cm	6.818	0.149	1.016	1.047	1.063

Run #7

Atmospheric Pressure	29.74" Hg.	CO_2 Outlet Pressure	13.82" Hg.
CO_2 Inlet Pressure	13.98" Hg.	Water Temperature	13.5°C

$$R/V = \frac{1}{(1.438 \times 10^{-13})(50.89)\left(\frac{43.64}{29.92}\right)\left(\frac{273}{286.5}\right)(1.023 \times 10^{12})} = .0961$$

Distance Source to Chamber	Potentiometer Reading	R/V	r/hr	Graphite Correction	Corrected r/hr
97.4 cm	.2603	.0961	.025	1.047	.026
87.4 cm	.5200	.0961	.050	1.047	.052
77.4 cm	1.052	.0961	.101	1.047	.106
67.4 cm	2.235	.0961	.215	1.047	.225
57.4 cm	4.782	.0961	.460	1.047	.482
47.4 cm	10.752	.0961	1.033	1.047	1.081

APPENDIX D

The three ionization chambers to be used for measuring gamma radiation in the Bulk Shielding Facility, 50 cc. variable, 900 cc. 10^{12}, and 900 cc. 10^{10} chambers were standardized in the water tank against the Co^{60} source. The following tables are a summary of the measurements and calculations for the standardization of these chambers.

50 cc. Variable Chamber

Run #1

Atmospheric Pressure 29.58" Hg. Air Outlet Pressure 19.57" Hg.

Air Inlet Pressure 19.90" Hg. Water Temperature 13.5°C

$$R/V = \frac{1}{(.926 \times 10^{-13})(50.89)\left(\frac{49.32}{29.92}\right)\left(\frac{273}{286.5}\right)(1.003 \times 10^{10})} = 13.47$$

Distance Source to Chamber	Potentiometer Reading	R/V	r/hr	Graphite Correction	Corrected r/hr
67.4 cm	.0162	13.47	.218	1.047	.228
57.4 cm	.0341	13.47	.459	1.047	.481
47.4 cm	.0757	13.47	1.020	1.047	1.068
37.4 cm	.1801	13.47	2.426	1.047	2.540
27.4 cm	.4758	13.47	6.409	1.047	6.710
17.4 cm	1.499	13.47	20.192	1.047	21.141

Run #2

Atmospheric Pressure	29.34" Hg.	Air Outlet Pressure	19.38" Hg.
Air Inlet Pressure	19.68" Hg.	Water Temperature	13.5°C

$$R/V = \frac{1}{(0.926 \times 10^{-13})(50.89)\left(\frac{273}{286.5}\right)\left(\frac{48.87}{29.92}\right)(1.003 \times 10^{10})} = 13.59$$

Distance Source to Chamber	Potentiometer Reading	R/V	r/hr	Graphite Correction	Corrected r/hr
67.4 cm	.0162	13.59	.220	1.047	.230
57.4 cm	.0341	13.59	.463	1.047	.485
47.4 cm	.0751	13.59	1.021	1.047	1.069
37.4 cm	.1782	13.59	2.422	1.047	2.536
27.4 cm	.4666	13.59	6.341	1.047	6.639
17.4 cm	1.4828	13.59	20.151	1.047	21.098

Run #3

Atmospheric Pressure	29.34" Hg.	CO_2 Outlet Pressure	18.34" Hg.
CO_2 Inlet Pressure	18.64" Hg.	Water Temperature	13.5°C

$$R/V = \frac{1}{(1.438 \times 10^{-13})(50.89)\left(\frac{47.83}{29.92}\right)\left(\frac{273}{2.865}\right)(1.003 \times 10^{10})} = 8.941$$

Distance Source to Chamber	Potentiometer Reading	R/V	r/hr	Graphite Correction	Corrected r/hr
67.4 cm	.0249	8.941	.223	1.047	.233
57.4 cm	.0517	8.941	.462	1.047	.484
47.4 cm	.1147	8.941	1.026	1.047	1.073
37.4 cm	.2716	8.941	2.428	1.047	2.542
27.4 cm	.7111	8.941	6.358	1.047	6.657
17.4 cm	2.268	8.941	2.027	1.047	21.223

10^{12} 900 cc. Chamber

Run #1

Atmospheric Pressure	29.39" Hg.	Air Outlet Pressure	20.81" Hg.
Air Inlet Pressure	20.95" Hg.	Water Temperature	14.5°C

$$R/V = \frac{1}{(.926 \times 10^{-13})(891)\left(\frac{50.27}{29.92}\right)\left(\frac{273}{287.5}\right)(1.004 \times 10^{12})} = .0076$$

Distance Source to Chamber	Potentiometer Reading	R/V	r/hr	Graphite Correction	Corrected r/hr
90.55 cm	4.768	.0076	.0362	1.116	.040
80.55 cm	9.753	.0076	.0741	1.116	.082

Run #2

Atmospheric Pressure	29.54" Hg.	Air Outlet Pressure	20.95" Hg.
Air Inlet Pressure	21.12" Hg.	Water Temperature	14.5°C

$$R/V = \frac{1}{(.926 \times 10^{-13})(891)\left(\frac{50.58}{29.92}\right)\left(\frac{273}{287.5}\right)(1.004 \times 10^{12})} = .0075$$

Distance Source to Chamber	Potentiometer Reading	R/V	r/hr	Graphite Correction	Corrected r/hr
110.55 cm	1.1595	.0075	.009	1.16	.010
100.55 cm	2.393	.0075	.018	1.16	.020
90.55 cm	4.899	.0075	.037	1.16	.041
80.55 cm	10.089	.0075	.076	1.16	.084

Run #3

Atmospheric Pressure	29.55" Hg.	Outlet Pressure	20.91" Hg.
Inlet Pressure	21.07" Hg.	Water Temperature	14.5°C

$$R/V = \frac{1}{(.926 \times 10^{-13})(891)\left(\frac{50.54}{29.92}\right)\left(\frac{273}{287.5}\right)(1.004 \times 10^{12})} = .0075$$

Distance Source to Chamber	Potentiometer Reading	R/V	r/hr	Graphite Correction	Corrected r/hr
110.55 cm	1.161	.0075	.0087	1.16	.010
100.55 cm	2.355	.0075	.0177	1.16	.020
90.55 cm	4.835	.0075	.0363	1.16	.040
80.55 cm	10.011	.0075	.0758	1.16	.085

10^{10} 900 cc. Chamber

Run #1

Atmospheric Pressure	29.55" Hg.	Air Outlet Pressure	19.59" Hg.
Air Inlet Pressure	19.89" Hg.	Water Temperature	14.5°C

$$R/V = \frac{1}{(.926 \times 10^{-13})(891)\left(\frac{49.92}{29.92}\right)\left(\frac{273}{287.5}\right)(.995 \times 10^{10})} = .780$$

Distance Source to Chamber	Potentiometer Reading	R/V	r/hr	Graphite Correction	Corrected r/hr
100.55 cm	.0223	.780	.017	1.16	.020
90.55 cm	.0455	.780	.035	1.16	.041
80.55 cm	.0995	.780	.078	1.16	.090
70.55 cm	.1963	.780	.153	1.16	.177
60.55 cm	.4222	.780	.329	1.16	.382
50.55 cm	.9344	.780	.729	1.16	.846
40.55 cm	2.154	.780	1.680	1.16	1.948
30.55 cm	5.335	.780	4.161	1.16	4.826

Run #2

Atmospheric Pressure	29.49" Hg.	Air Outlet Pressure	20.48" Hg.
Air Inlet Pressure	20.75" Hg.	Water Temperature	14°C

$$R/V = \frac{1}{(.926 \times 10^{-13})(891)\left(\frac{50.11}{29.92}\right)\left(\frac{273}{287}\right)(.9950 \times 10^{10})} = 0.766$$

Distance Source to Chamber	Potentiometer Reading	R/V	r/hr	Graphite Correction	Corrected r/hr
100.55 cm	.0227	.766	.017	1.16	.020
90.55 cm	.0456	.766	.035	1.16	.041
80.55 cm	.0970	.766	.074	1.16	.086
70.55 cm	.2026	.766	.155	1.16	.179
60.55 cm	.4345	.766	.333	1.16	.386
50.55 cm	.9660	.766	.740	1.16	.858
40.55 cm	2.248	.766	1.722	1.16	1.997
30.55 cm	5.521	.766	4.229	1.16	4.906

Run #3

Atmospheric Pressure	29.50" Hg.	Air Outlet Pressure	18.82" Hg.
Air Inlet Pressure	19.08" Hg.	Water Temperature	13°C

$$R/V = \frac{1}{(.926 \times 10^{-13})(891)\left(\frac{48.45}{29.92}\right)\left(\frac{273}{286}\right)(.9950 \times 10^{10})} = .0787$$

Distance Source to Chamber	Potentiometer Reading	R/V	r/hr	Graphite Correction	Corrected r/hr
100.55 cm	.0221	.0787	.017	1.16	.020
90.55 cm	.0460	.0787	.036	1.16	.042
80.55 cm	.0964	.0787	.076	1.16	.088
70.55 cm	.2011	.0787	.158	1.16	.183
60.55 cm	.4337	.0787	.341	1.16	.396
50.55 cm	.9655	.0787	.760	1.16	.882
40.55 cm	2.206	.0787	1.736	1.16	2.014
30.55 cm	5.483	.0787	4.315	1.16	5.005

Q-1058-1

UNCLASSIFIED

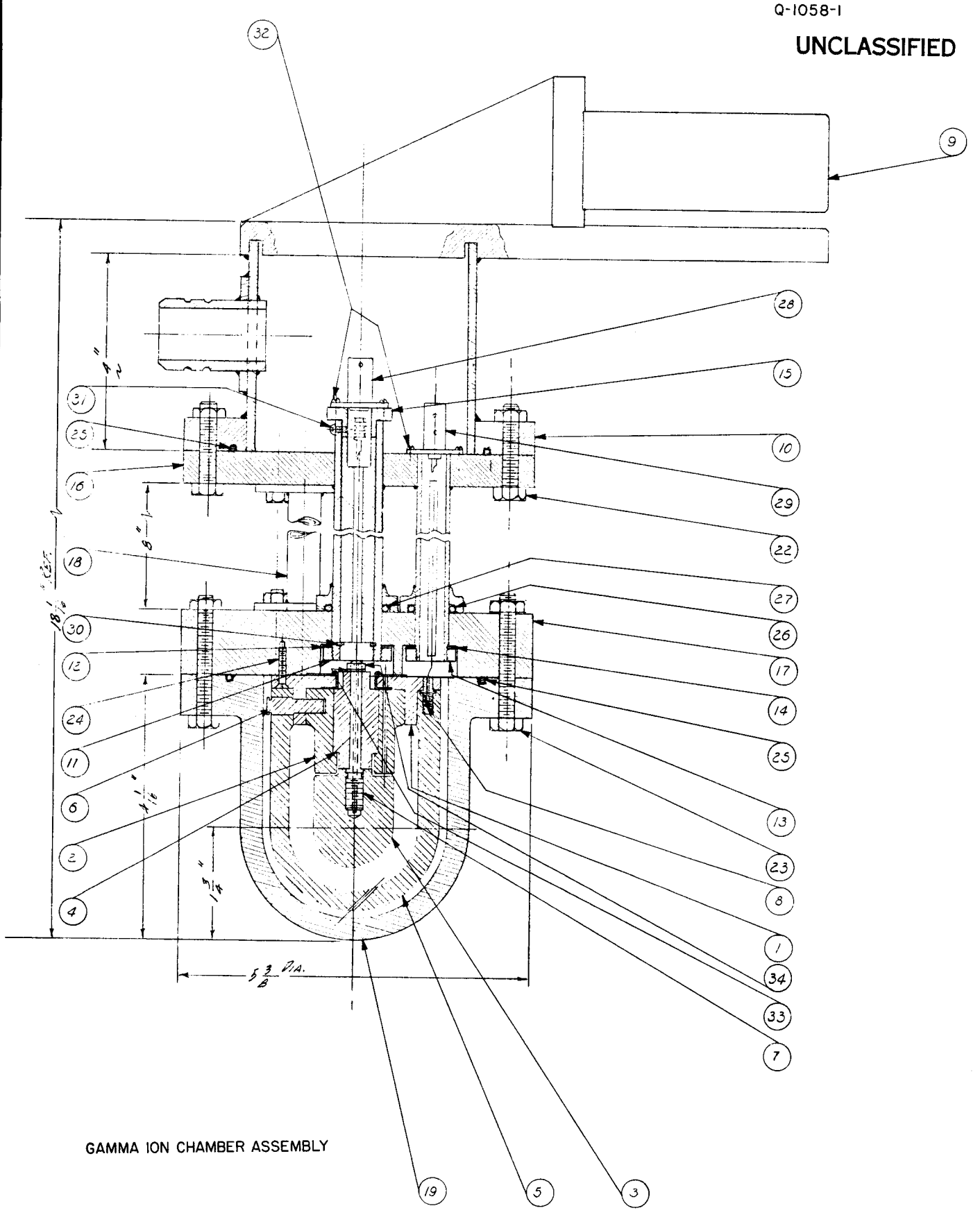

GAMMA ION CHAMBER ASSEMBLY

APPENDIX E

Det. No.	No. Req.	Description	Mat'l	Dwg. No.
1	4	1/4-20x1 1/4 Lg. F.H.M.S.	S.S.	Q-1057-2
2	1	Bracket Assy.	2SAL	" -1
3	1	Box	2SAL	" -1
4	3	4-40x1/4 Lg. F.H.M.S.	Al	" -1
5	1	2x3 1/4 x 1/4 Thk.	2SAL	" -2
6	1	Nipple	2SAL	" -2
7	8	1/4-20x1 1/4 Lg. Hex. Hd. Caps. Nuts & Washers	S.S.	" -1
8	1	Flange	2SAL	" -2
9	1	Flange	2SAL	" -2
10	2	Spacer Supports	2SAL	" -3
11	1	1 OD. Tubing - 1/8 Wall (1/2 Hard)	2SAL	" -3
12	1	Insulator	Lucite	" -3
13	1	Flange (1/2 Hard)	2SAL	" -3
14	1	Waldes Snap Ring No. 5005-25	Steel	" -1
15	8	10-24x2 1/4 Lg. Hex. Hd. Caps. Nuts & Washers	S.S.	" -1
16	1	Flange	Lucite	" -3
17	1	Flange	Lucite	" -3
18	2	1/4-20x5/8 Lg. F.H.M.S.	Al	" -1
19	1	Support Ring	Mg.	" -3
20	6	Pins	Lucite	" -3
21	3	4-40x1/4 Lg. F.H.M.S.	Al	" -1
22	1	Retainer	Mg.	" -4
23	1	Chamber Shell - Upper	Graphite	" -4
24	1	" " - Lower	"	" -4
25	1	Collector	"	" -4
26	1	40 Mil Wire	Nickel	Stock
27	1	Connector	Mg.	1057-4
28	2	Disk	Teflon	" -4
29	1	Special Nut	Brass	" -4
30	1	" " Spring	—	Furnish
31	1	Lock Nut	Mg.	1057-4
32	1	"	Mg.	" -4
33	1	Flange (1/2 Hard)	2SAL	" -4
34	1	1/4 OD. 0.34 Bore	2SAL	" -4
35	1	1/4 OD. 1/8 Wall Tubing (1/2 Hard)	2SAL	" -4
36	3	4-40x1/4 Lg. F.H.M.S.	Al	" -1
37	1	Box Mount (1/2 Hard)	2SAL	" -4
38	2	Bushing	Teflon	" -4
39	1	6-32 Nut & Washer	Al	" -1
40	1	Special Screw (Nut & Washer Stn.)	Brass	" -4
41	1	5 1/8 OD. 1/8 Wall Tubing (1/2 Hard)	2SAL	" -2
42	1	Waldes Snap Ring No. 5000-25	Steel	" -1
43	1	O'Ring 1 1/8 OD. 1/8 C.S. (Neoprene)	"	" -1
44	1	" " 1 OD. 1/8 C.S. "	"	" -1
45	2	" " 6 OD. 1/8 C.S. "	"	" -1
46	1	Spanner Wrench	Steel	" -5
47	1	" "	"	" -5
48	1	Connector	Teflon	" -5

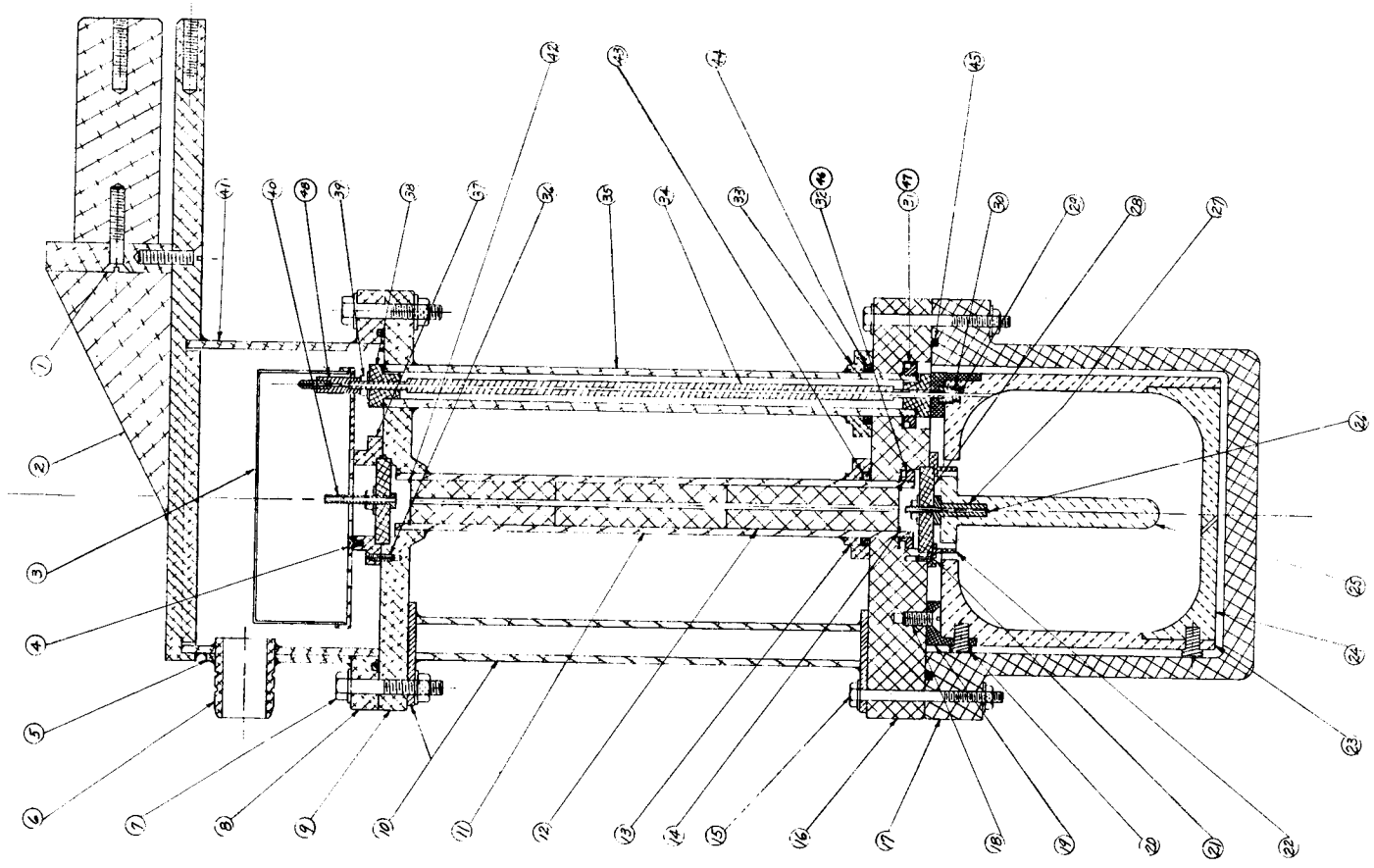

APPENDIX F

Gamma Ion Chamber Dets.	1057-2
" " " "	1057-3
" " " "	1057-4
" " " "	1057-5
Reference Dwgs.	Dwg. No.

REVISIONS

Limits on dimensions unless otherwise specified
Fractions ±
Decimals ±
Angles ±

First Cost
Checked
Drawn by K.A. Miller
Checked
Approved 8-8-50
Checked OKK
Approved

OAK RIDGE NATIONAL LABORATORY
INSTRUMENT DEPARTMENT

GAMMA ION CHAMBER ASSEMBLY

Scale: FULL | Q-1057-1 | D