[redacted]

MARTIN MARIETTA ENERGY SYSTEMS LIBRARIES
3 4456 0360853 0

ORNL 962, Series A 8A

PROGRESS REPORT
CHEMISTRY-SEPARATION
PROCESSES FOR PLUTONIUM
AND URANIUM

AEC RESEARCH AND DEVELOPMENT REPORT

LABORATORY RECORDS
1954

CHEMICAL TECHNOLOGY DIVISION
PILOT PLANT SECTION REPORT FOR
NOVEMBER, 1950-JANUARY, 1951

DECLASSIFIED
Classification Changed To:
By Authority Of: AEC List 9.21.70
By: E. Goldberg 2.4.71

OAK RIDGE NATIONAL LABORATORY
CENTRAL RESEARCH LIBRARY
CIRCULATION SECTION
4500N ROOM 175
LIBRARY LOAN COPY
DO NOT TRANSFER TO ANOTHER PERSON
If you wish someone else to see this report, send in name with report and the library will arrange a loan.
UCN-7969 (3 9-77)

OAK RIDGE NATIONAL LABORATORY
OPERATED BY
CARBIDE AND CARBON CHEMICALS DIVISION
UNION CARBIDE AND CARBON CORPORATION
POST OFFICE BOX P
OAK RIDGE, TENNESSEE

[redacted]

[redacted]

ORNL-962
Chemistry-Separation
Processes for Plutonium
and Uranium

Contract No. W-7405-eng-26

This document consists of 38 pages. Copy 8 of 142, Series A.

CHEMICAL TECHNOLOGY DIVISION

PILOT PLANT SECTION REPORT

FOR NOVEMBER, 1950--JANUARY, 1951

H. K. Jackson

DATE ISSUED
MAR 8 1951

OAK RIDGE NATIONAL LABORATORY
Operated by
CARBIDE AND CARBON CHEMICALS DIVISION
Union Carbide and Carbon Corporation
Post Office Box P
Oak Ridge, Tennessee

[redacted]

MARTIN MARIETTA ENERGY SYSTEMS LIBRARIES
3 4456 0360853 0

[redacted]

INTERNAL DISTRIBUTION

1. G. T. Felbeck
2-3. Chemistry Library
4. Physics Library
5. Biology Library
6. Health Physics Library
7. Metallurgy Library
8-9. Training School Library
10-13. Central Files
14. C. E. Center
15. C. E. Larson
16. W. B. Humes, K-25
17. W. D. Lavers, Y-12
18. A. M. Weinberg
19. J. A. Swartout
20. E. D. Shipley
21. E. J. Murphy
22. F. C. VonderLage
23-24. F. L. Steahly
25. E. H. Taylor
26. A. H. Snell
27. A. Hollaender
28. K. Z. Morgan
29. D. W. Cardwell
30. M. T. Kelley
31. W. H. Pennington
32. M. E. Ramsey
33. J. A. Lane
34. R. N. Lyon
35. H. K. Jackson
36. F. R. Bruce
37. J. O. Davis
38. F. L. Culler
39. L. T. Corbin
40. E. J. Frederick
41. C. L. Burros
42. G. S. Sadowski
43. E. C. Stewart
44. J. W. Ullmann
45. D. O. Darby
46. R. B. Lindauer
47. L. C. Peery
48-62. Central Files (O.P.)

EXTERNAL DISTRIBUTION

63-68. Argonne National Laboratory
69. Armed Forces Special Weapons Project
70-76. Atomic Energy Commission, Washington
77-80. Brookhaven National Laboratory
81-82. Carbide & Carbon Chemicals Division (K-25 Plant)
83. Chicago Patent Group
84-89. Du Pont Company
90-96. General Electric Company, Richland
97. Hanford Operations Office
98-101. Idaho Operations Office
102. Iowa State College
103. Kellex Corporation
104-109. Knolls Atomic Power Laboratory
110-112. Los Alamos
113-115. Mound Laboratory
116. Naval Research Laboratory
117. New Operations Office
118-121. New York Operations Office
122. Patent Branch, Washington
123. Savannah River Operations Office, Wilmington
124-138. Technical Information Services, Oak Ridge
139-142. University of California Radiation Laboratory

This d[redacted]
Nation[redacted]
Its tr[redacted]
any m[redacted]
and [redacted]
applic[redacted]

[redacted]

[redacted]

Table of Contents

		Page Number
1.0	Abstract	4
2.0	Summary	5
3.0	Purex Process	6
3.1	Purex Process Flowsheet Development	6
3.2	Pilot Plant Equipment in Bldg. 3019	9
3.3	Purex Pilot Plant Equipment in Bldg. 3503	18
3.4	Results of Cold Runs	18
3.5	Decontamination by Electrostripping	24
3.6	Inter Column Flow	27
3.7	Program	27
4.0	Metal Recovery Program	28
4.1	Process Flowsheet Development	28
4.2	Metal Recovery Building	31
4.3	Metal Recovery Equipment	31
5.0	Radiochemical Waste Process	37

[redacted]

[redacted]

[redacted]

1.0 Abstract

This report presents a summary of the flowsheets, equipment and program for the ORNL pilot plant development of the Purex Process and of the ORNL Metal Recovery Program.

2.0 Summary

During the past three months the bulk of the effort of the section has been devoted to the construction and startup of the Purex Pilot Plant and to the construction of the ORNL Metal Recovery Plant. The primary objective of this report is to summarize the equipment, flowsheets and programs for these two plants.

Conversion of the Purex pilot plant equipment in Buildings 3019 and 3503 (formerly 205 and 706-HB) is 90% complete. 60% of the equipment has been calibrated and tested, and cold runs have been completed in both first and second cycle columns. Construction and testing of the equipment will be completed in February, and hot runs are scheduled to begin in April. The two ORNL Purex flowsheets will then be demonstrated in both packed and pulse columns.

The building structure for the ORNL Waste Metal Recovery Plant has been completed, and 15% of the process equipment has been installed. The first hot runs for this plant are scheduled for June, 1951.

Purex Process

Darby, Harrington, Hylton, Landry, Lewis, Lindauer, Parker, Sadowski, Ullmann, Winget

3.0 Purex Pilot Plant Development

3.1 Purex Process Flowsheet Development

Two Purex Flowsheets are now under consideration in the pilot plant. In the No. 1 Purex Flowsheet plutonium and uranium are separated and partially decontaminated in the first cycle and further separation from fission products is effected in plutonium and uranium second cycles. This flowsheet requires a total of eight columns (see Fig. 3.1-1 and ORNL-846). A cost estimate for installing the No. 1 Purex Flowsheet into equipment originally designed for Redox was made by Hanford Works (HW-18896), and it was concluded that the flowsheet could be modified to increase significantly its economic advantages. The modification of the process would provide for the separation of plutonium from uranium in the second decontamination cycle rather than in the first cycle. This change was incorporated into the Purex Process Flowsheet No. 2, (see Fig. 3.1-2 and ORNL-936) which eliminates one cycle of equipment, reduces the number of columns from eight to five, and utilizes a single solvent composition instead of the three required in Flowsheet #1. The primary disadvantage of the No. 2 Flowsheet is that the plutonium contamination of the final uranium product may be too great to meet the specification set by K-25 of 1 part of plutonium in 1 x 10^8 parts of uranium. In order to circumvent this difficulty, a IIB' column was suggested by Hanford. The IIBU stream would enter in the middle of the IIB' column and be contacted

[redacted]

DWG 10465
FIG 3.1-1

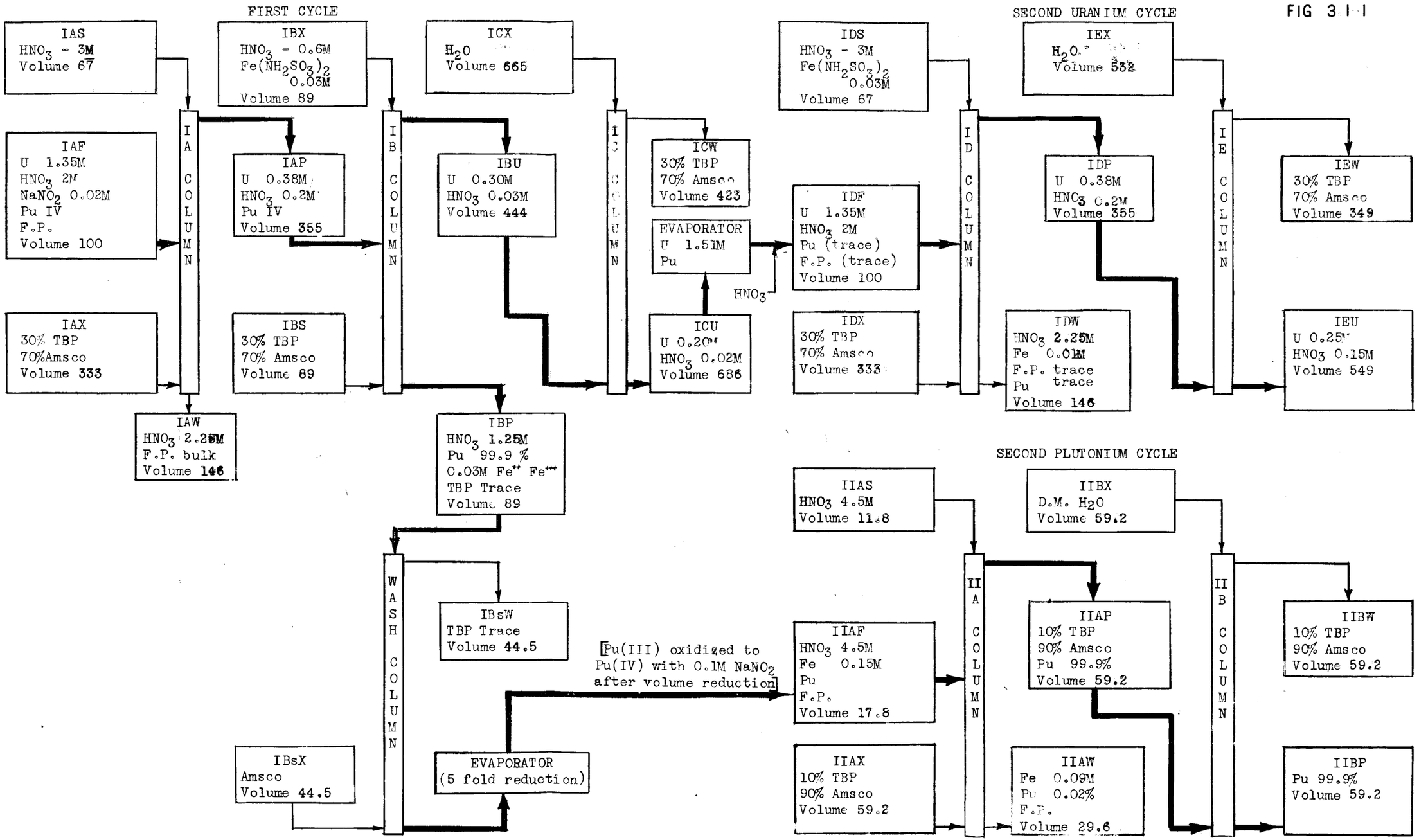

[redacted]

DWG. 10466
FIG. 3.1-2

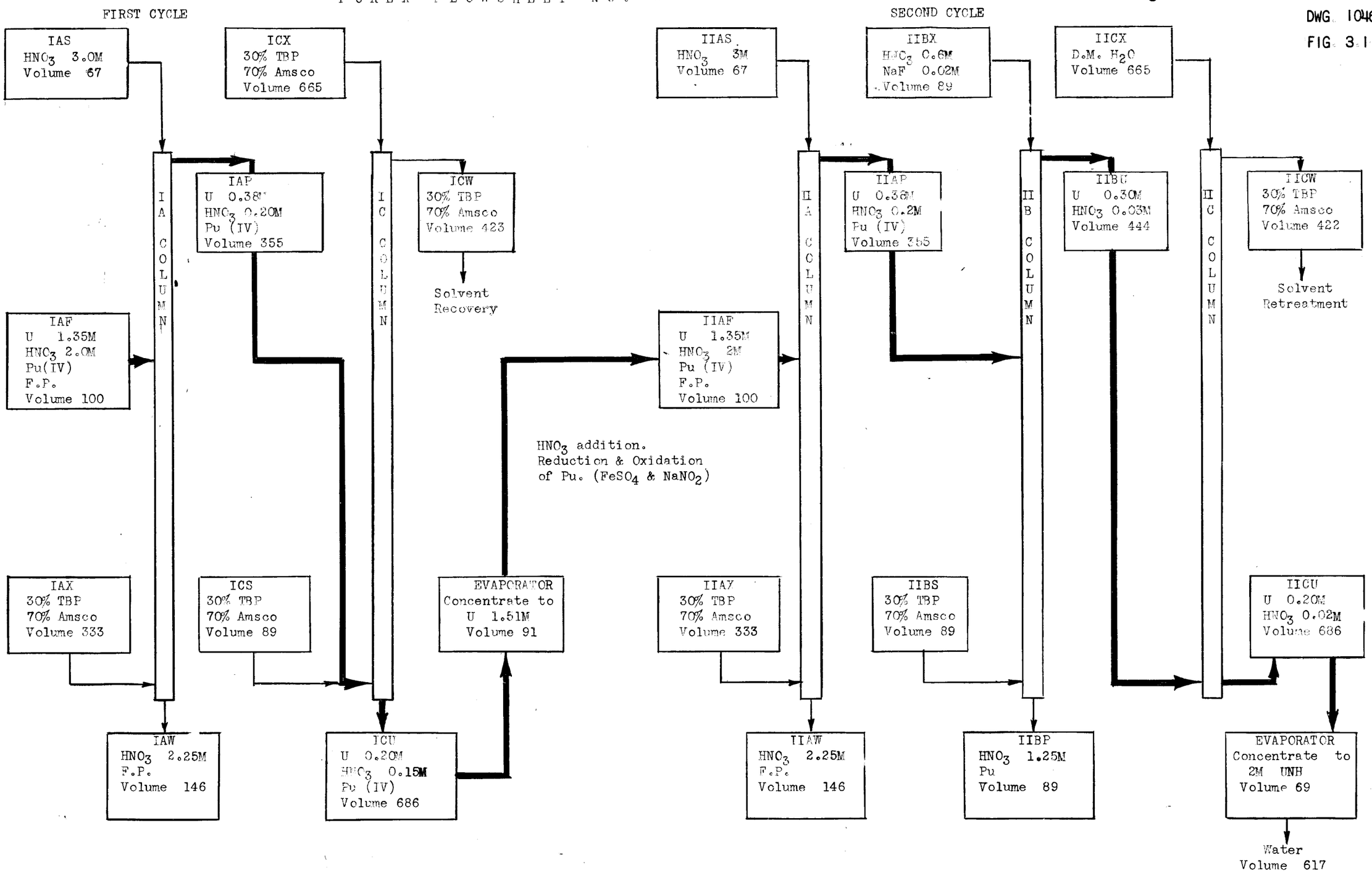

[redacted]

Purex Process Flowsheet Development (continued)

with an aqueous extractant which would remove the final traces of plutonium and fission products from the organic uranium stream. A solvent scrub stream would enter the bottom of the IIB' column.

Consideration has been given to a one cycle process which would incorporate a head-end treatment for ruthenium, columbium and zirconium decontamination. A complexing agent would be employed in column B to yield a plutonium stream which could be evaporated to a laboratory scale volume for final cleanup. The one cycle process is still in the scouting stage.

The pilot plant will demonstrate both the No. 1 and No. 2 Flowsheets in packed and pulsed columns, at activities up to full Hanford level. The initial effort of the pilot plant will be devoted to the No. 1 Flowsheet. Head-end treatments cannot be demonstrated with present equipment.

3.2 Pilot Plant Equipment in Bldg. 3019

The Purex Pilot Plant equipment is located in Cells I, II, III and IV. A plan of the building is given in Figure 3.2-1. The equipment consists of a dissolver and first cycle feed makeup tanks in Cell I, first cycle extraction column in Cell IA, first cycle strip, all second cycle column and accessory tanks in Cell II, plutonium evaporator, solvent treatment and storage tanks in Cell III, and nitric acid recovery system in Cell IV. Schematic equipment flowsheets of this equipment are presented in Figures 3.2-2 and 3.2-3. Operation of equipment is done largely from the gallery where all instruments, jet valves, head tanks and metering pumps are located. All solutions are pumped by Milton Roy controlled volume pumps. Hot feed to the extraction columns is pumped indirectly by means of a controlled flow

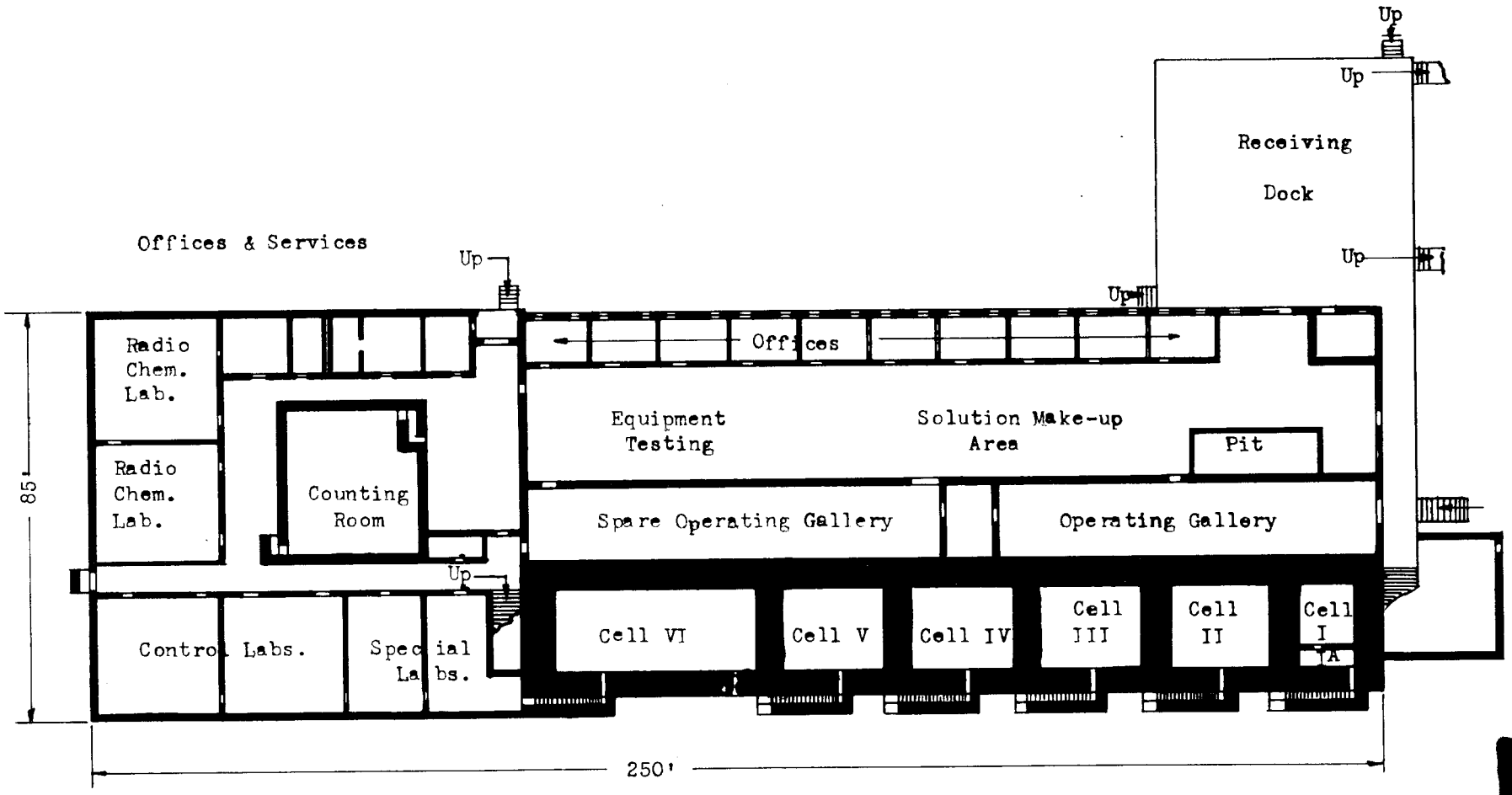

PLAN OF 3019 PILOT PLANT

BLDG.

Dwg. 10467
Fig. 3.2-1

[redacted]

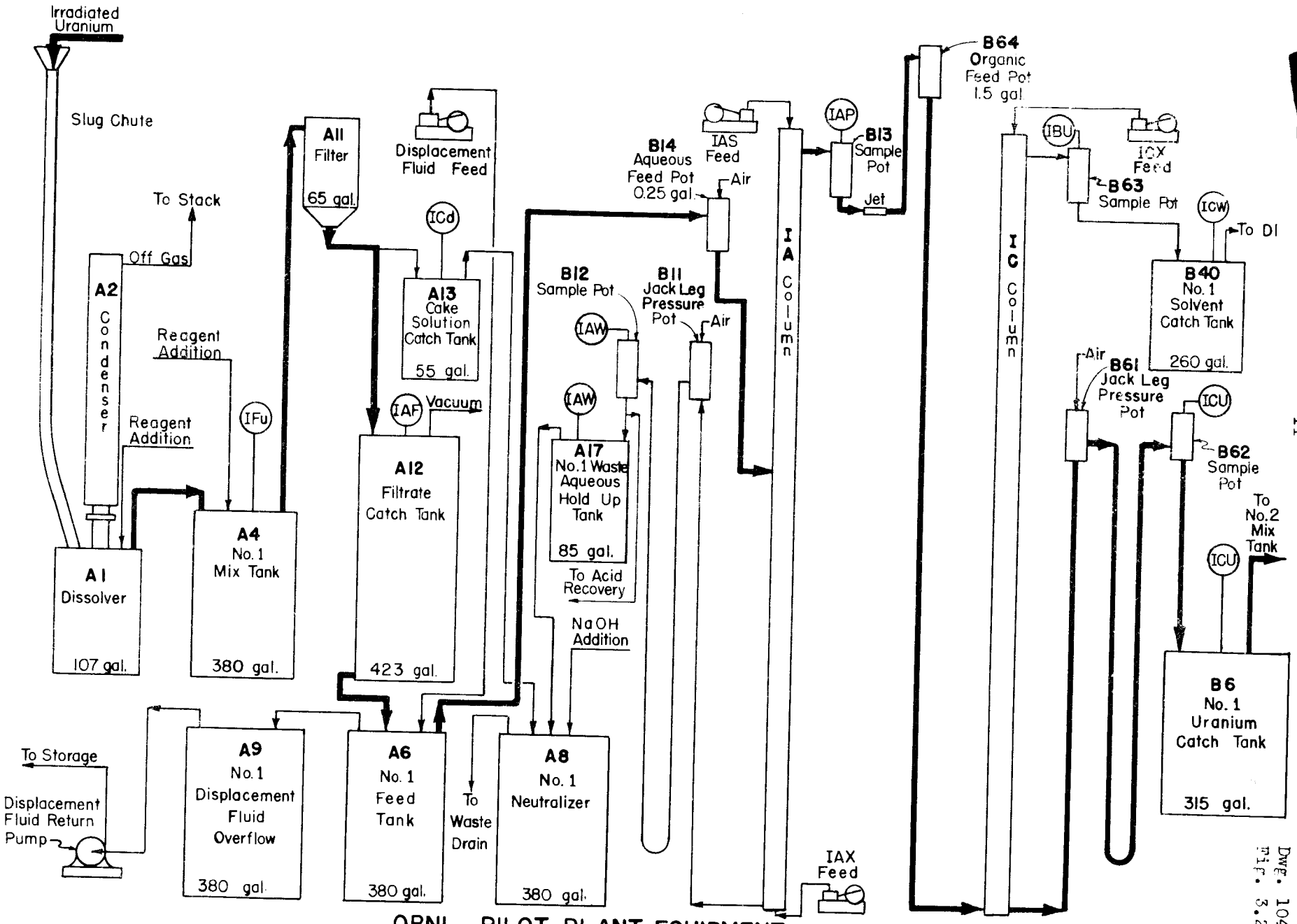

ORNL PILOT PLANT EQUIPMENT
FLOWSHEET FOR PUREX PROCESS - FIRST CYCLE

Dwg. 10468
Fig. 3.2-2

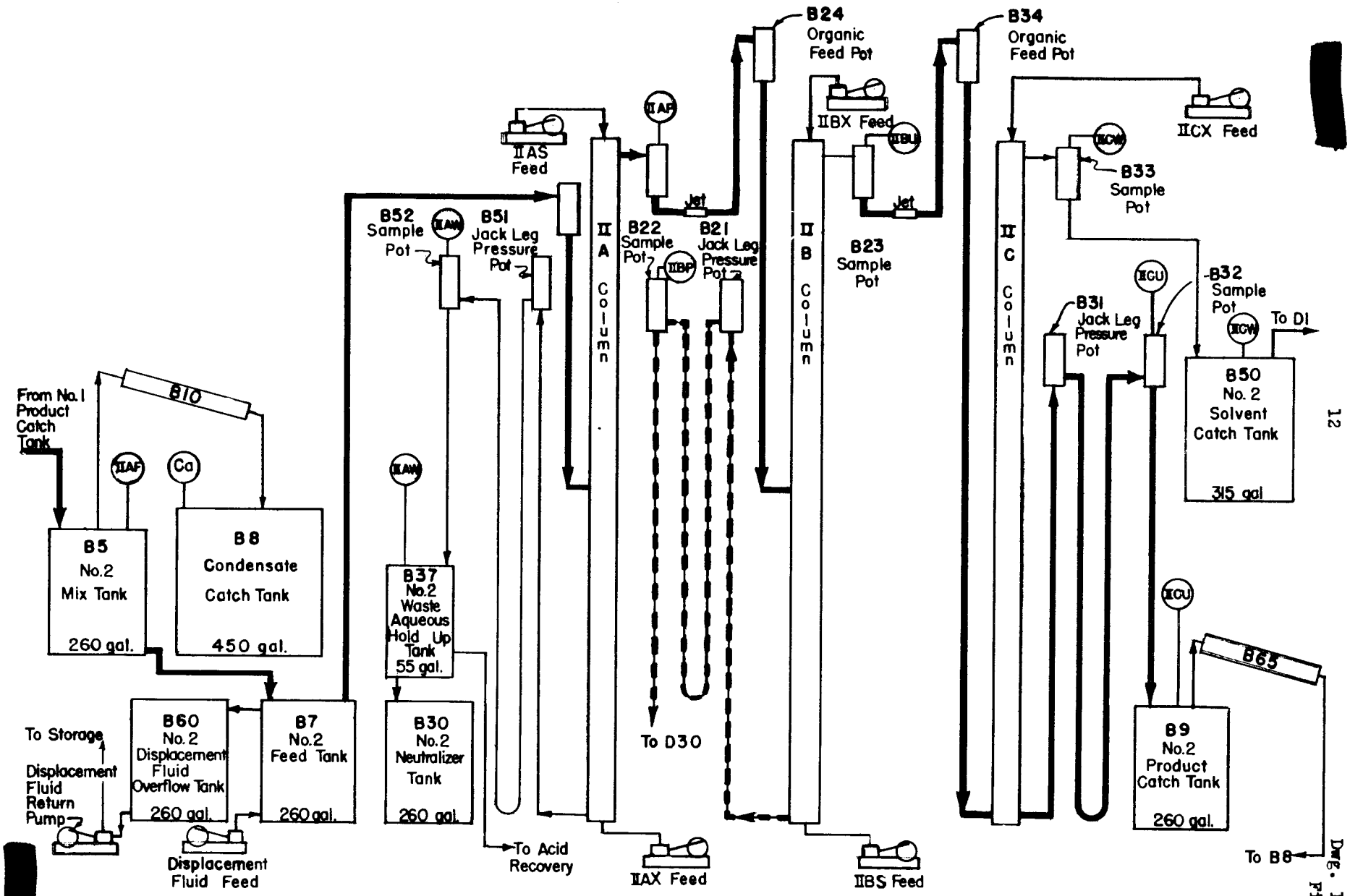

ORNL PILOT PLANT EQUIPMENT
FLOWSHEET FOR PUREX PROCESS-SECOND CYCLE

Dwg. 10468
Fig. 3.2-3

Pilot Plant Equipment in Bldg. 3019 (continued)

of displacement fluid into the feed tanks. Sampling is done for the most part from the roof over the cells, but several tanks which are located on the cell floor are sampled from the cold pipe tunnel.

3.21 Feed Makeup

Slugs are charged to the dissolver (A1) from the roof via a slug chute. The dissolver is equipped with an off-gas condenser (A2). Dissolver instrumentation consists of a temperature controller for steam and water to the lower jacket, and a pressure controller actuating an air controlled valve in the off-gas from the condenser. Provisions have been made for additional heating or vapor refluxing by the addition of a second jacket at the top of the dissolver. The condenser has been equipped with a steam or water jacket and taps for introducing reflux to the packing, steam to the packing, or oxygen to aid in oxidation of the off-gas. It is felt that these features will be useful in the investigation of fumeless dissolving.

After coating removal and slug dissolution, the dissolver solution is filtered through a sintered stainless steel filter, adjusted to the correct uranium molarity and acid concentration and dropped by gravity to the feed tank.

3.22 Solvent Extraction

Both packed and pulse columns (Table 3.22) have been installed with the piping arranged to permit the demonstration of both types of columns with either the original ORNL #1 Purex Flowsheet (A, B, C - A, C), or the revised #2 Flowsheet suggested by Hanford (A, C - A, B, C). Three pulse columns have been installed (A, B, C) to be used in the

Table 3.22

Column Dimensions

AC-ABC Flowsheet	Column	ABC-AC Flowsheet	Section	Diameter (IPS)	"Packed" Height
	Packed				
IA		IA	Extraction	3"	19'
			Scrub	3"	21'
IC		IIC	Strip	4"	39'
IIA		IIA	Extraction	3"	20'
			Scrub	3"	20'
IIB		IB	Partition	3"	28'
			Scrub	3"	13'
IIC		IC	Strip	4"	36'6"
	Pulse				
IIA		IA	Extraction	2"	8'-6"
			Scrub	3"	8'
IIB		IB	Partition	2-1/2"	8'
			Scrub	2"	8'
IIC		IC	Strip	4"	12'

Solvent Extraction (continued)

first or second cycle depending on the flowsheet under demonstration. For packed columns, changing flowsheets will merely involve changing blanks in lines. For pulse columns it will also mean disconnecting flanged nozzles on the A Pulse column (now located in Cell II), moving the entire column by means of the overhead crane to Cell IA and reconnecting the flanged nozzles. Flanges have been located in Cell IA identical to those in Cell II to allow this change with a minimum of time and effort.

Since the pulse columns are designed to operate at a 150 kg of uranium/day rate (compared to 50 kg. of uranium for the packed columns) the capacity of all pumps has been increased to this capacity. The pulse columns will be operated in the same fashion as the packed columns with the exception of the pulse which will be applied by Milton Roy Pumps with discharge ball checks removed. The A and B columns will have the entering solvent stream (AX or BS) pulsed by pumping the stream through the pulse pump. This method provides a constant purge of the pulser and prevents buildup of activity at this point. Since no cold stream is fed to the bottom of the C column a static CU leg to the bottom of the column is pulsed. All pulsing pumps are located in cold areas. B and C pulse pumps are located in the pipe tunnel while the A pulse pump is located in the operating gallery.

3.23 Product Evaporation

The second cycle uranium stream is continuously evaporated in Tank B9. At the conclusion of a run the evaporation is continued until the UNH is 2M. This solution is then withdrawn to a drum by vacuum.

Product Evaporation (continued)

The plutonium stream from the B column flows to an evaporator in which a volume reduction of five to fifty will be made depending on the flowsheet. The evaporator and all accessory equipment is located in a stainless steel room in Cell III. This room will be kept at a negative pressure with respect to Cell III and will be operated and sampled through glove ports.

3.24 Acid Recovery

The dual objectives of the Purex acid recovery unit are:

(1) Recovery of nitric acid from raffinates for reuse in the process.

(2) Reduction of the radioactive waste to a small volume.

A schematic flow diagram of the acid recovery equipment to be used in the pilot plant is given in Figure 3.24-1. The aqueous waste from the first or second cycle extraction flows continuously to an evaporator which is maintained at a constant liquid level. Nitric acid vapors from the evaporator pass through an entrainment separator and thence to a packed column for concentration. The column is 15 ft. high, 4" inches in diameter and is packed with 1/2" x 1/2" Raschig rings. Acid of constant boiling strength (about 65%) overflows continuously from a reboiler at the base of the column, and dilute acid (about 1%) from the top of the column is condensed and transferred to waste. Virgin 1% acid will be fed to the top of the column for reflux. The concentrated nitric acid and fission products remaining in the evaporator at the end of each run will be reduced in volume by a factor of about two, and then transferred to a waste storage tank. The recovered acid will be used to dissolve slugs for subsequent runs. Initial runs will be made at atmospheric pressure, but reduced pressure will be used later in

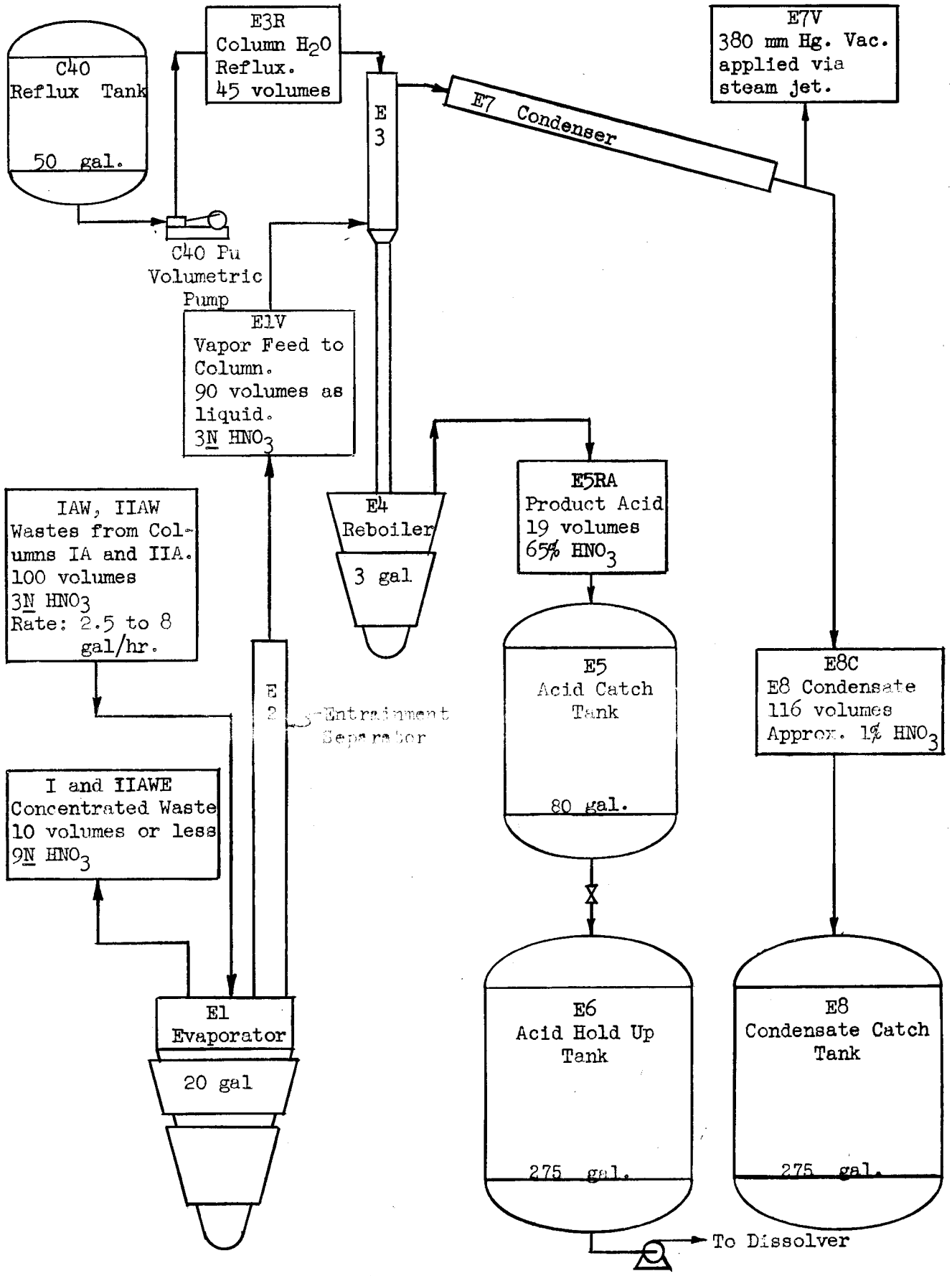

ORNL PILOT PLANT ACID RECOVERY EQUIPMENT

Acid Recovery (continued)

order to reduce corrosion, and to increase fission product decontamination.

3.25 Solvent Recovery

Used solvent treatment as well as fresh solvent makeup is performed in Cell III. Waste solvent from both cycles is jetted to storage Tank D1 from which batches are pumped to D2 as required. Solvent in D2 is given two sodium carbonate wash and two water washes to remove traces of acid and uranium. Treated solvent is then stored in Tanks D7 and D8 until needed.

3.3 Purex Pilot Plant Equipment in Bldg. 3503

The general features of the plant in this building are similar to the Bldg. 3019 Pilot Plant. Facilities are available for dissolving, filtration, one cycle of solvent extraction, and product evaporation. Two 1-1/2" columns and one 2" columns are connected in series; each column has 40' of packed section, and each has three different feed points. A schematic flowsheet of this equipment is presented in Fig. 3.3-1. During the next few months this equipment will be operated at 5% Hanford level as a service to the Laboratory Section for purpose of testing flowsheet modifications which appear promising from laboratory countercurrent batch data. This equipment will also be used for second cycle plutonium runs when the No. 1 Flowsheet is being tested in Bldg. 3019.

3.4 Results of Cold Runs in Building 3019

3.41 First Cycle Cold Runs

Four first cycle cold runs have been completed using the Purex Flowsheet No. 2. The following information was extracted from the run data which are summarized in Table 3.41-1.

[redacted]

DWG. 10471
FIG. 3.3-1

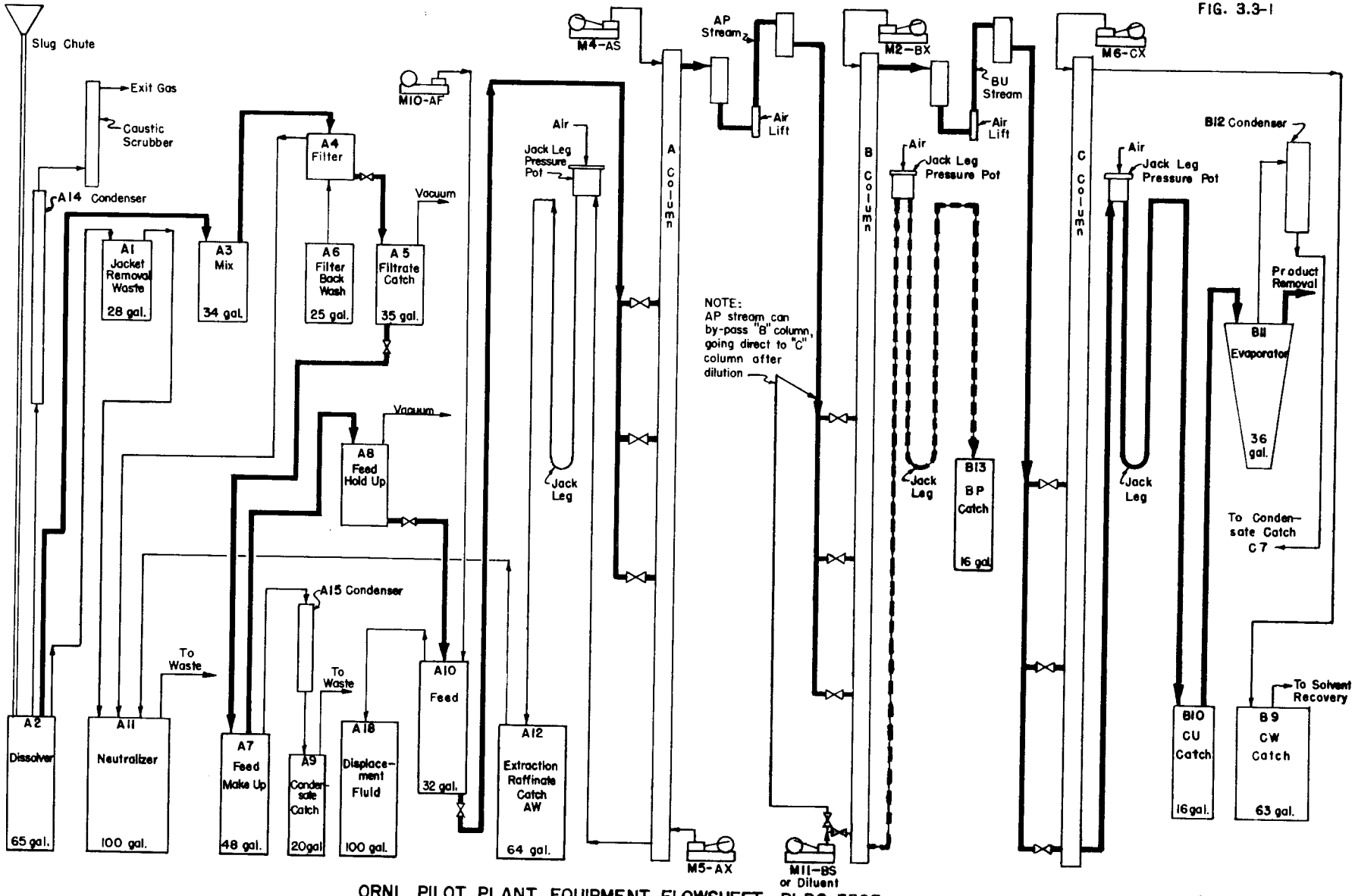

ORNL PILOT PLANT EQUIPMENT FLOWSHEET—BLDG. 3503

[redacted]

Table 3.41-1

Summary of First Cycle Cold Runs-Purex Flowsheet No. 2

Run No.	IC-1	IC-2	IC-3	IC-4
Duration of Run (hours)	72	81	41	46
Throughput (kg. U/day)	37.5	37.5	50	50
Flowrate (both phases) gal./hr./sq. ft.				
IA Extraction	125	125	165	165
IA Scrub	100	100	135	135
IC Strip	160	160	215	200
Columns				
Diameter IA (in.)	3	3	3	3
Diameter IC (in.)	4	4	4	4
Length IA Extraction (ft.)	20	20	20	20
Length IA Scrub (ft.)	20	20	20	20
Length IC Strip (ft.)	22	22	22	22
Column Strip	H_2O	0.02M HNO_3	H_2O	H_2O
AP Stream Dilution (%)	20	20	20	0
Uranium Loss-Flowing Stream (%)				
IAW	0.0018	0.025	0.035	0.57
ICW	21.4	27.3	20.6	14.8
Uranium Stream Material Balance (%)				
U	99.6	106	98.7	106
HNO_3	95.4	101	102	109
Composite Tank Material Balance (%)				
U	110	99.1	93.5	99.6
HNO_3	98.3	97.9	103	107
Solvent	122	109	108	101

First Cycle Cold Runs (continued)

(1) IAW flowing stream uranium losses were 0.0018, 0.025, 0.035 and 0.57 per cent in the four runs. The high IAW loss in Run IC-4 was due to a plugged instrument line to the column IA interface controller.

(2) Both the flowing stream and composite tank ICW losses averaged 21 per cent.

(3) The use of 0.02M nitric acid as column IC strip resulted in a ICW uranium loss of 26 per cent compared with a loss of 23 per cent with water as strip.

(4) Increased material throughput had very little effect on uranium losses in column IC. The loss to the ICW stream at 37.5 kg U/day was 21 per cent and at 50 kg U/day the loss was 20 per cent.

(5) Uranium material balances varied from 94 to 110 per cent. Nitric acid material balances varied from 98 to 107 per cent.

(6) The first cycle is operable at a throughput of at least 50 kg U/day without the dilution of the IAP stream with the solvent (ICS) stream before the organic phase enters column IC.

(7) Results from the startup after a planned four-hour shutdown indicate that the pumps may be shut down for emergency repairs without seriously altering chemical equilibrium in the columns.

(8) The uranium loss to the ICW stream in the first cycle was 21 per cent and the loss to the IICW in the second cycle was only 10 per cent at a 37.5 kg U/day throughput. The compositions of the streams entering column C were identical with respect to uranium

First Cycle Cold Runs (continued)

(8) but differed significantly with respect to nitric acid concentration. The first cycle organic phase entering column IC was 0.17M with respect to nitric acid while the second cycle organic was only 0.05M. This suggest suggests a strong dependency of uranium stripping efficiency upon the nitric acid concentration of the organic feed to column C.

3.42 Second Cycle Cold Runs

Three preliminary second cycle cold runs have been completed and are summarized in Table 3.42-1. Flowing stream uranium losses in the IIAW were 0.01 per cent, in the IIBP 0.006 per cent and in the IICW 8.0 per cent. Significant conclusions reached from the runs are as follows:

(1) It became apparent that the height of column C must be increased in both the first and second cycle equipment. The IIC column has been lengthened from 22 to 37 feet and the IC column has been lengthened from 22 to 38 feet.

(2) An increase in the $\frac{CX}{BU}$ ratio from $\frac{3}{2}$ to $\frac{2}{1}$ for the 22 ft. column decreased the uranium loss to the IICW stream from 6.8 per cent to 5.3 per cent.

(3) Column IIA flooded at the 50 kg U/day rate (290 gal/hr./sq. ft., total flow). Large volumes of organic phase appeared in the IIAW stream. At the 25 kg U/day and the 37.5 kg U/day rates, there was a tendency to flood as evidenced by the uneven buildup rate in the IIAW catch tank and the periodic dropping of the interface. However the IIAW stream did not contain organic phase. The present

Table 3.42-1

Summary of Second Cycle Cold Runs-Lab Flowsheet No. 2

Run No.	IIC-1	IIC-2	IIC-3
Duration of Run hours	72	80	27
Throughput kg U/day	25	37.5	50
Flowrate gal./hr./sq. ft. (both phases)			
IIA Extraction	185	275	365
IIA Scrub	145	220	290
IIB Extraction	90	130	175
IIB Scrub	30	45	60
IIC Stripping	105	160	215
Uranium Loss (Flowing Stream) %			
IIAW	0.004	0.014	-*
IIBP	0.002	0.007	-
IICW	6.8	10.5	-
Length of Packed Section Ft.			
IIA Extraction	24	24	24
IIA Scrub	14	14	14
IIB Extraction	28	28	28
IIB Scrub	13	13	13
IIC Stripping	22	22	22

*Column A flooded at 50 kg U/day.

Second Cycle Cold Runs (continued)

2 inch IIA column is being replaced with a 3 inch column and packing supports are being redesigned in order to increase the throughput of the system.

Three additional second cycle runs were made at a throughput of 15 kg U/day to check the efficiency of uranium stripping in the 37 ft. IIC column as a function of $\frac{CX}{BU}$ ratio. The ratios investigated were 3/2, 2/1 and 3/1 (Table 3.42-2). An increase in $\frac{CX}{BU}$ ratio from 3/2 to 2/1 decreased the uranium loss in the IICW from 0.20 to 0.06 per cent. Further increase of the $\frac{CX}{BU}$ ratio to 3/1 did not result in appreciably lower uranium loss to the IICW stream.

3.5 Decontamination by Electrostripping

During the recent equipment changes made in Cell I, the conventional decontamination technique of washing the equipment with chemical agents was augmented by electrostripping with considerable success. The procedure consisted of passing direct current through the vessel, electrolyte, and electrode. The average current, supplied by a portable welding machine, was 200 amperes at 35 volts. Two per cent sulfuric acid was used as the electrolyte and the equipment was made the positive pole.

Two methods were used on the tanks. In the first method, an electrode was suspended in the center of the tank. In the second method, the electrode was suspended about one inch from the side of the tank and moved an inch a minute around the circumference of the vessel. A long shallow wood box containing a metal strip for the electrode was used in decontaminating the dip pipes. In each case, stainless steel electrodes were used.

Table 3.42-2

Summary of Second Cycle Cold Runs-Purex Flowsheet No. 2

Run No.	IIC-4	IIC-5	IIC-6
$\frac{CX}{BU}$ ratio	$\frac{3}{2}$	$\frac{2}{1}$	$\frac{3}{1}$
Duration of Run (hours)	48.5	48	24
Throughput (kg. U/day)	15	15	15
Flowrate (both phases) gal./hr./sq. ft.			
IIA Extraction	110	110	110
IIA Scrub	90	90	90
IIB Partitioning	55	55	55
IIB Scrub	18	18	18
IIC Strip	65	80	90
Columns:			
Diameter IIA (in.)	2	2	2
Diameter IIB (in.)	3	3	3
Diameter IIC (in.)	4	4	4
Length IIA Extraction (ft.)	17	17	17
Length IIA Scrub (ft.)	21	21	21
Length IIB Partitioning (ft.)	28	28	28
Length IIB Scrub (ft.)	13	13	13
Length IIC strip (ft.)	37	37	37
Uranium Loss-Flowing Stream (%)			
IIAW	0.010	0.007	0.028
IIBP	0.018	0.007	0.012
IICW	0.25	0.04	0.055
Uranium Loss-Composite Tank (%)			
IIAW	0.019	0.003	0.007
IIBP	0.012	0.01	0.007
IICW	0.20	0.06	0.068
Flowing Stream Material Balance (%)			
U	89.5	88.5	102.9
HNO_3	96.5	93.8	99.8
Composite Tank Material Balance (%)			
U	99.7	102.1	107.5
HNO_3	89.8	-	-
Solvent	102.2	-	-

Decontamination by Electrostripping (continued)

The data presented in the following table are representative of the results acquired by electrostripping. The table lists the average activity reading on tanks which were filled with 2% H_2SO_4 and electrostripped for 20-40 minutes with approximately 200 amperes of current.

Table 3.5

Decontamination of Tanks by Electrostripping

First Cycle Tank	Initial Reading mr/hr(1,2)		Final Reading mr/hr(1)	
	Inside	Outside	Inside	Outside
A17	4000	400	100	5
A1	1700	60	100	20
A9	4000	40	400	10

(1) All reading taken at one inch from surface.

(2) Initial reading taken after decontamination with water, nitric acid, oxalic acid, ferrous sulfate, ammonium bifluoride and sodium hydroxide.

This method of decontaminating was effective in reducing the activity in a relatively short time, compared to the conventional methods with chemicals, to a point which gave ample working time on the tanks and accessories.

3.6 Inter Column Flow

All packed columns in the Purex Pilot Plant are approximately 40 feet high, and for this reason cascading of the columns is not feasible. As an alternate to gravity flow an air lift is used to raise each organic product stream to the feed pot for the succeeding column. This method for linking tall columns in series has proved to be highly successful.

3.7 Program

During February the initial cold runs will be made in pulse columns and in acid recovery equipment, and additional first cycle runs will be made using a strip column of increased height. The first cycle feed makeup equipment should be ready early in March, and the first hot runs are scheduled for the latter part of that month.

4.0 Metal Recovery Process - Stewart

The building structure for the ORNL Waste Metal Recovery Plant has been completed, and approximately 15% of the process equipment has been installed. Process Flowsheet No. 4 has been adopted using 0.005M HF as a complexing agent for plutonium, and the resulting equipment modifications have been incorporated into the plant design. The installation of process equipment will be completed by May 15, 1951 if present delivery schedules are met by the vendors, and the first hot runs are scheduled for June 1, 1951.

4.1 Process Flowsheet Development

The development of the process to recover the uranium from the waste metal storage tanks has progressed and has resulted in Flowsheet No. 4 as shown in Figure 4.1-1. The previous Flowsheet No. 3 about which the plant was originally designed is shown in Figure 4.1-2. The following flowsheet changes are significant:

a. The volume of the plutonium-bearing stream from the partitioning column is 63% of Flowsheet No. 3; this will reduce the evaporator load and potential entrainment problems.

b. Nitric acid has been eliminated from the extractant in the partitioning column in order to obtain greater plutonium separation and reduce the acid requirements.

c. Hydrofluoric acid has been substituted for ammonium fluosilicate. This, in conjunction with (b) above, has permitted the elimination of the makeup area. The hydrofluoric acid will be injected directly into a metered stream of water to produce the desired extractant scrub.

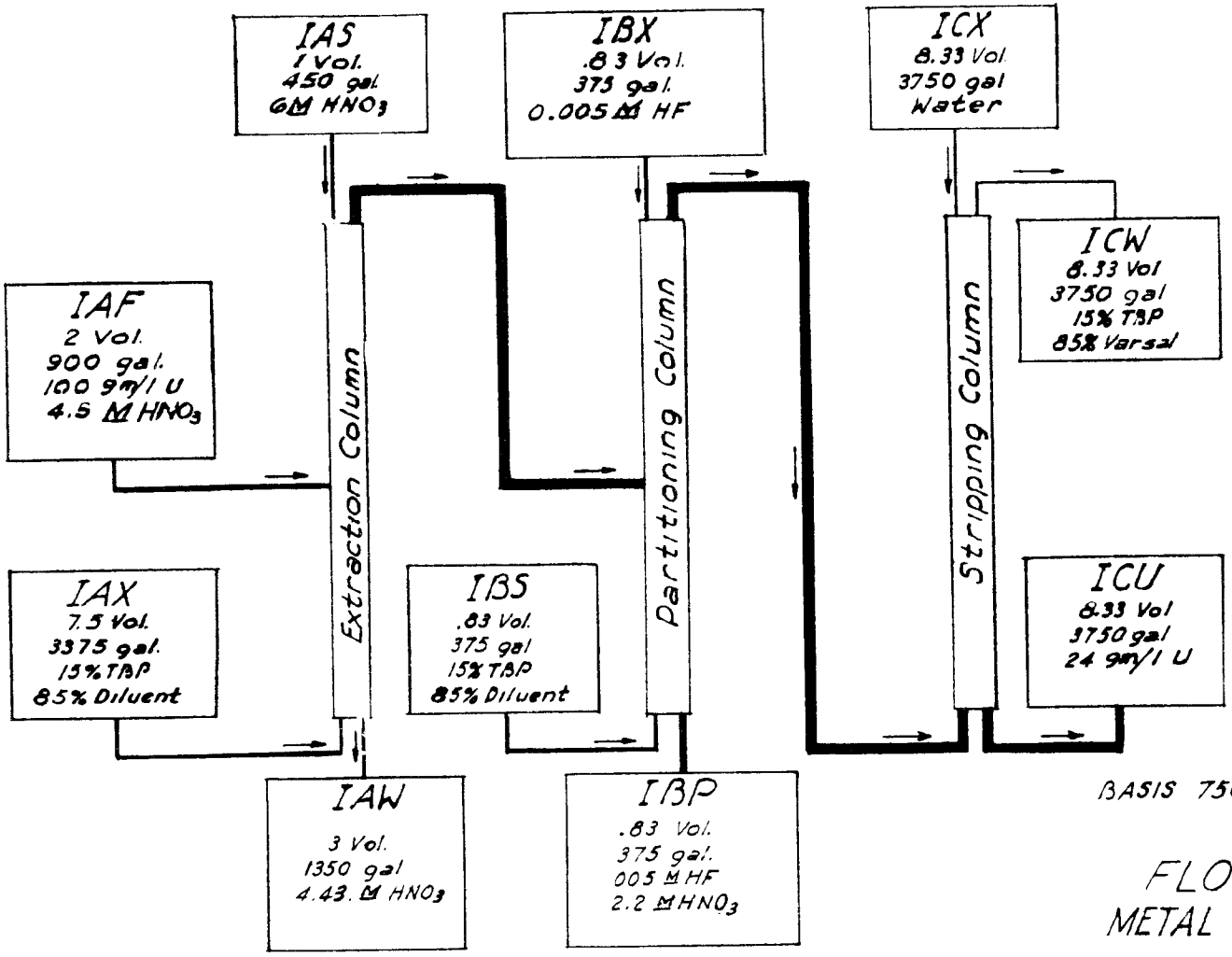

BASIS 750 pounds per 24 hrs.

FLOWSHEET Nº 4
METAL RECOVERY PROCESS

J.P. Jackson 1-12-51

DWG. 10472
FIG. 4.1-1

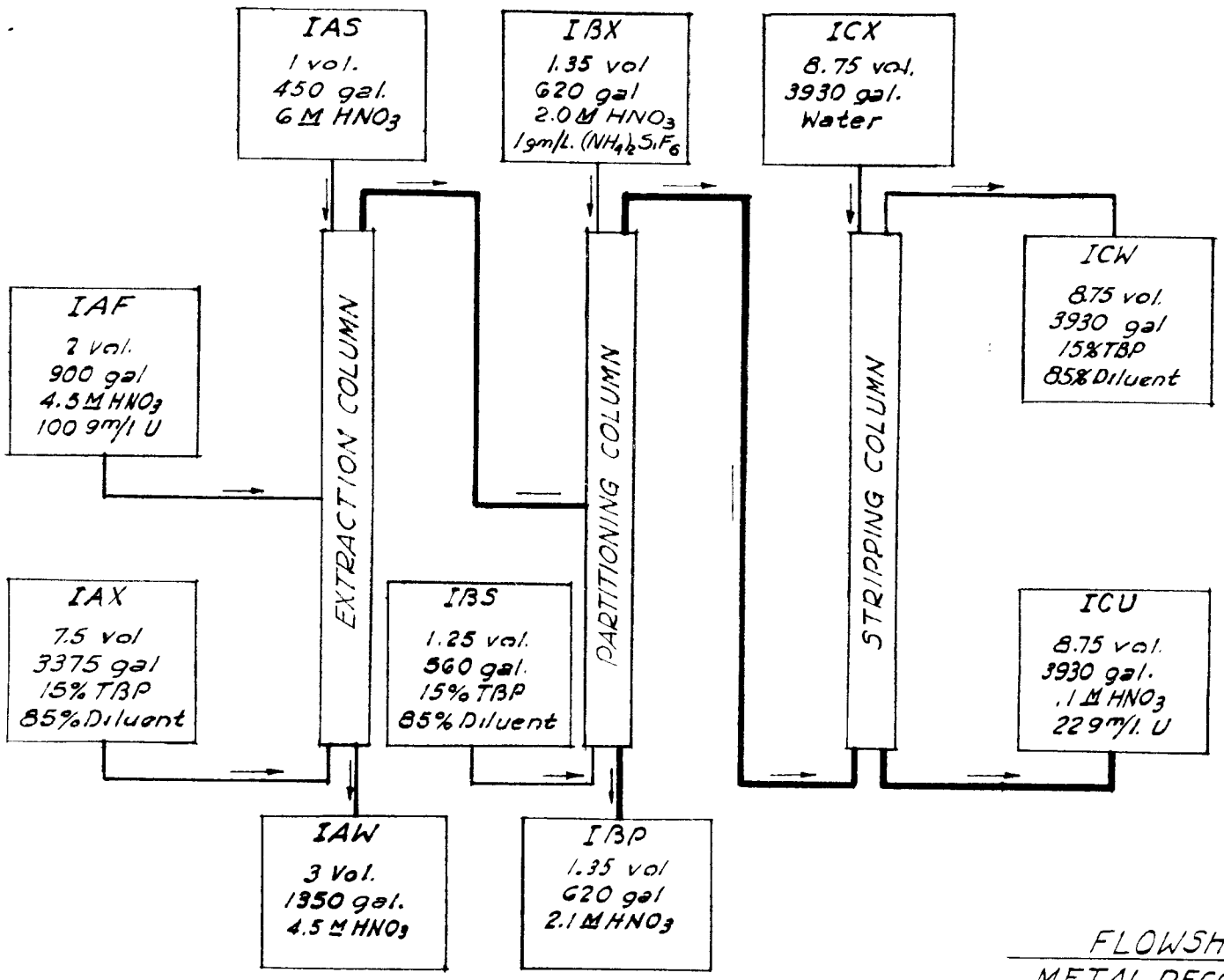

FLOWSHEET Nº 3
METAL RECOVERY PROCESS

Dwg. 10473
Fig. 4.1-2

J.P.Jackson
1-17-51

Process Flowsheet Development (continued)

d. The volume of solvent used as scrub in the partitioning column has been reduced by 60%. This change slightly increases the overall capacity of the column.

4.2 Metal Recovery Building

The ORNL Waste Metal Recovery Building was designed by ORNL and was erected in 88 days by the J. A. Jones Construction Company, of Charlotte, North Carolina. The building is of single-story construction, approximately 60 feet square, with two cells having 2' of concrete shielding and three isolation cells having 8" of shielding. The remainder of the building houses the control room, makeup area, locker room and storage room. Figure 4.2 gives a floor plan of the building, which is located adjacent to the South Tank Farm Area.

The cells are of concrete structure and the remaining areas of the buildings are constructed of metal paneling. Cells A and B are 26' x 26' and 8' x 9' respectively. The isolation cells C, D and E are 8' x 9'.

4.3 Metal Recovery Equipment

4.31 General

A schematic equipment flowsheet is shown in Figure 4.31-1 and the layout of equipment in Figure 4.31-2. The bulk of the equipment is being fabricated by off-plant contractors, although several storage vessels were obtained from the Y-12 Area and altered as required. The equipment is being installed by the ORNL Maintenance Division. All purchased vessels are expected to be received by May 1, 1951. Type 304, 347 or 316 stainless steel construction has been specified for all equipment.

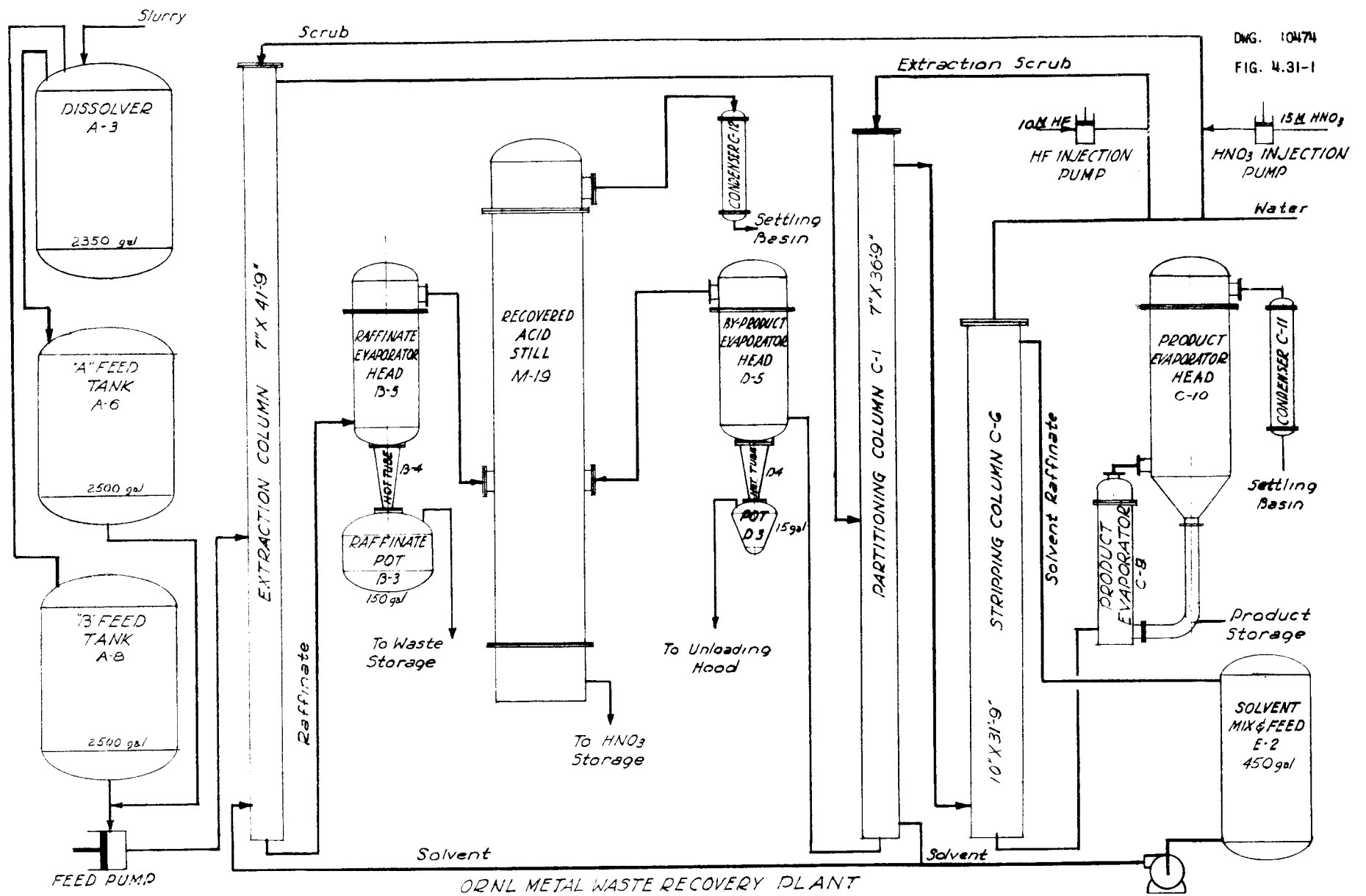

DWG. 104714

FIG. 4.31-1

ORNL METAL WASTE RECOVERY PLANT
BLDG 3505
SCHEMATIC EQUIPMENT FLOWSHEET

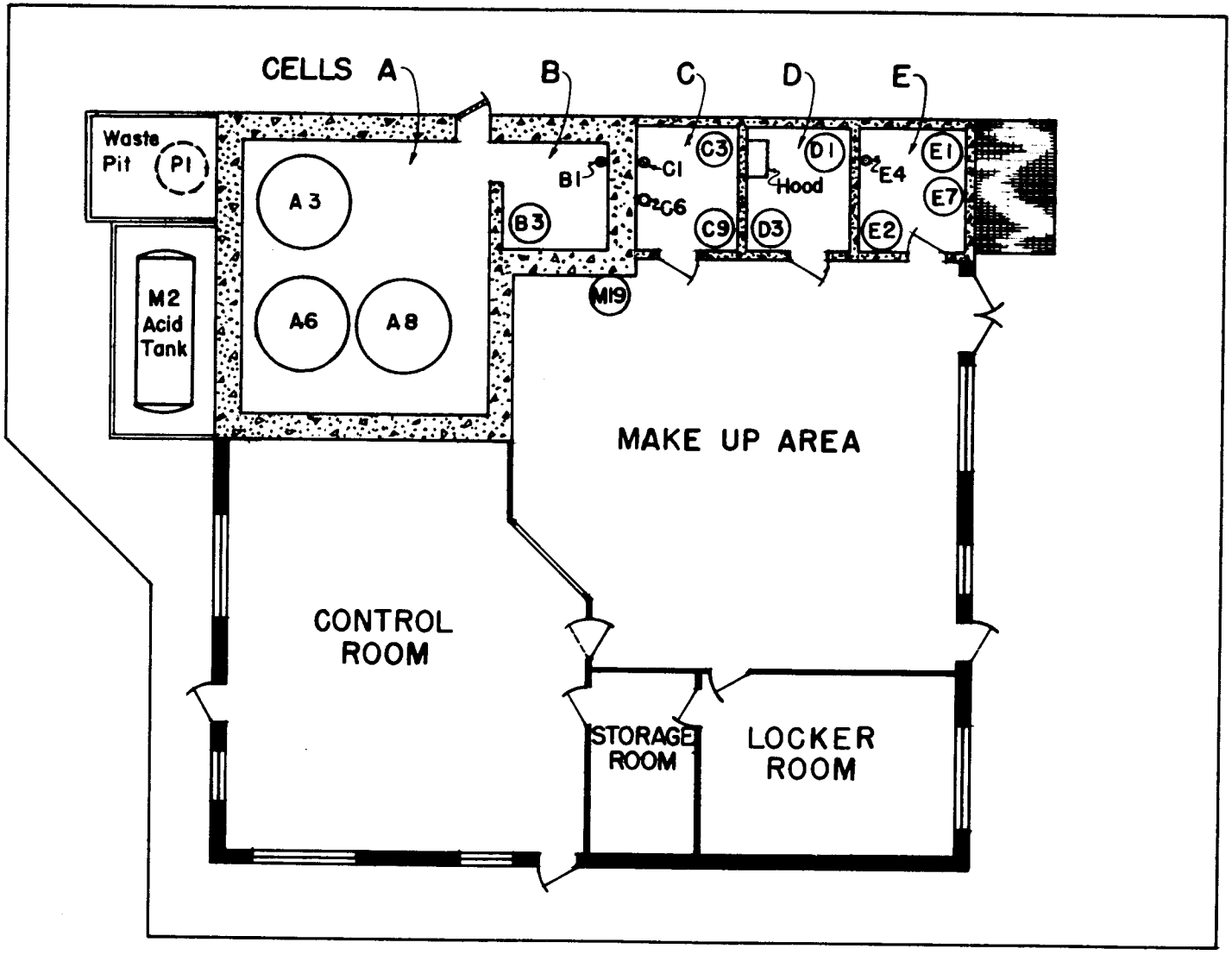

ORNL METAL RECOVERY BUILDING FLOOR PLAN

Dwg. 10475
Fig. 4.31-2

4.32 Tank Farm Alterations

The Waste Metal Recovery Plant feed will come from underground storage tanks in the form of a diuranate slurry. The tank farm alterations include the installation of the feed and overflow lines from and to the diuranate feed tank, waste disposal lines to the Tank Farm Evaporator feed tank and to the concentrate storage tank. Temporary transfer lines from the temporary diuranate storage tanks to the feed tank will permit all the slurries to be combined; this will make possible a simpler feed preparation procedure.

4.33 Feed Preparation Equipment

The feed preparation equipment is located in Cell A and consists of four process vessels. A sixty gallon head-tank (A-1) feeds the slurry to the dissolver (A-3) which is a 2300 gallon jacketed vessel equipped with an agitator. Two 2500 gallon jacketed vessels (A-6, A-8) serve as alternate feed tanks in which one feed batch can be prepared while another is being fed to the extraction column.

4.34 Solvent Extraction Equipment

The solvent extraction equipment consists of three stainless steel columns packed with 1/2" x 1/2" stainless Raschig rings. The extraction column (B-1) is 7" x 41'9" and is located in Cell B. Approximately sixteen (16) feet of the column's height is placed in a sump while the remainder is within the shielded cell except for the disengaging section which rises above the roof deck. The partitioning column (C-1) is 7" x 36'-9" and is located with the stripping column (C-6) in Cell C. The latter column is 10" x 31' 9". Each column is equipped with a pressure pot for the control of the interface position.

4.35 Solvent Treatment and Recovery Equipment

The solvent system consists of a mix-feed tank (E-2) from which the solvent is pumped to the extraction and partitioning columns. To provide for cleanup the solvent is withdrawn from the system at 20% of the solvent flowrate and passed thru a scrubber column (E-4).

4.36 Evaporator Equipment

The aqueous raffinate stream from the extraction column is evaporated directly upon leaving the column by a combination falling film type and pot evaporator (B-3) placed near the column in Cell B. De-entrainment is affected by a vapor head containing three trays of bubble caps. A volume reduction of 6:1 is required of the unit. The plutonium bearing aqueous stream is evaporated in a nearly identical unit (D-3) placed in Cell D. The major difference in evaporators is the size of pots. A volume reduction varying from 100:1 to 300:1 is expected. The product evaporator (C-9) in Cell C consists of a vertical tube type evaporator with an enlarged vapor head (C-10) employing bubble caps for de-entrainment. A volume reduction of 20:1 is required to produce a two molar solution of UNH. Storage of the concentrate is provided in tank D-1.

4.37 Denitration and Drying

The denitrator and drying equipment consist of a spray drying tube and product collector cone. The operation of the drying tube provides that a 2M UNH solution be atomized with air in a downward movement through a heated polished tube. Heat is supplied by an induction heating unit operating at 500-600°C. The UO_3 produced is to be collected in a 5' x 5' cone bottomed collector; the gases will pass through a glass cloth

Denitration and Drying (continued)

filter element before entering the acid recovery system.

4.38 Nitric Acid Recovery System

The large usage of nitric acid in the recovery process has made it necessary that free acid be recovered. The nitric acid recovery column (M-19) will receive the fumes from the three evaporators and denitration system listed above. The column reboiler will permit the concentration of the acid to the constant boiling mixture (68%).

5.0 Radiochemical Waste Process - Shank

5.1 Evaporator Operating Summary

The Operations Division processed in the ORNL Radiochemical Waste Evaporator approximately 550,000 gallons of mixed waste during November, December and January with an average overall beta decontamination factor of 9×10^3 and an average condensate discharge activity of 2×10^{-10} curies/ml. An average decontamination factor of 3×10^3 has been obtained in the evaporator during the year 1950 while operating at an average evaporation rate of 285 gallons/hour. Less than 4% of the total beta activity discharged from ORNL during 1950 has been contributed by the evaporator condensate. Increased operational experience and the installation of a condensate conductivity probe has increased decontamination by a factor of about ten during the past year.

5.2 Evaporator Development Progress

5.21 Vapor Scrubber

Fabrication of the Peabody Impingement Baffle Plate Vapor Scrubber has been started by the vendor with delivery scheduled by March, 1951. An evaluation of the scrubber will be made after which it will be turned over to the Operations Division with the necessary operating instructions.

5.22 Foam Level Indication

The commercial electronic probe assemblies purchased for evaporator foam level indication have proven unsatisfactory due to insufficient insulation between the probe and the mounting head. Several insulating compounds have been investigated to alleviate this condition with none providing adequate service for more than 12 to 15 hours of

Foam Level Indication (continued)

operation. A new type of mounting head fabricated at ORNL, utilizing a teflon insulator, has been in service for two weeks without indication of failure. In addition to its continuity of service, the probe has proven a valuable assistance in decreasing foamovers. As a result of the success of the single probe a seven probe assembly, utilizing a teflon insulator, will be fabricated and installed.

5.23 Miscellaneous Investigations

A complete evaporator operational and economic study will be made upon installation and satisfactory operation of instruments and equipment now on order. Semi-automatic control will be investigated after thorough testing of the foam-level indicator.