UNCLASSIFIED

MARTIN MARIETTA ENERGY SYSTEMS LIBRARIES
3 4456 0360855 8

ORNL 965
Physics

EXPERIMENTAL JAR TEST LABORATORY STIRRING DEVICE

CONRAD P. STRAUB
P. N. HENSLEY

OAK RIDGE NATIONAL LABORATORY
CENTRAL RESEARCH LIBRARY
CIRCULATION SECTION
4500N ROOM 175
LIBRARY LOAN COPY
DO NOT TRANSFER TO ANOTHER PERSON
If you wish someone else to see this report, send in name with report and the library will arrange a loan.
UCN-7969 (3 9-77)

OAK RIDGE NATIONAL LABORATORY
OPERATED BY
CARBIDE AND CARBON CHEMICALS COMPANY
A DIVISION OF UNION CARBIDE AND CARBON CORPORATION
UCC
POST OFFICE BOX P
OAK RIDGE, TENNESSEE

UNCLASSIFIED

UNCLASSIFIED

ORNL 965

This document consists of 21 pages. No. 8 of 231 copies. Series A.

Contract No. W-7405, eng-26

HEALTH PHYSICS DIVISION

EXPERIMENTAL JAR TEST LABORATORY STIRRING DEVICE

Conrad P. Straub
P. N. Hensley

DATE ISSUED: MAY 14 1951

OAK RIDGE NATIONAL LABORATORY
operated by
CARBIDE AND CARBON CHEMICALS COMPANY
A Division of Union Carbide and Carbon Corporation
Post Office Box P
Oak Ridge, Tennessee

MARTIN MARIETTA ENERGY SYSTEMS LIBRARIES
3 4456 0360855 8

UNCLASSIFIED

ORNL 965
Physics

INTERNAL DISTRIBUTION

1. G. T. Felbeck (C&CCC)
2-3. Chemistry Library
4. Physics Library
5. Biology Library
6. Health Physics Library
7. Metallurgy Library
8-9. Training School Library
10-13. Central Files
14. C. E. Center
15. C. E. Larson
16. W. B. Humes (K-25)
17. W. D. Lavers
18. A. M. Weinberg
19. J. A. Swartout
20. E. D. Shipley
21. F. C. VonderLage
22. K. Z. Morgan
23. F. Western
24. A. H. Snell
25. E. H. Taylor
26. R. C. Briant
27. J. S. Felton
28. A. Hollaender
29. F. L. Steahly
30. D. W. Cardwell
31. W. H. Pennington
32. M. T. Kelley
33-42. C. P. Straub
43-47. P. N. Hensley
48. M. J. Skinner
49-66. Central Files (O.P.)

EXTERNAL DISTRIBUTION

67-78. Argonne National Laboratory
79. Armed Forces Special Weapons Project
80-85. Atomic Energy Commission, Washington
86. Battelle Memorial Institute
87. Brush Beryllium Company
88-91. Brookhaven National Laboratory
92. Bureau of Medicine and Surgery
93. Bureau of Ships
94-97. Carbide and Carbon Chemicals Company (K-25)
98. Columbia University (J. R. Dunning)
99. Columbia University (G. Failla)
100-104. E. I. du Pont de Nemours and Company
105-108. General Electric, Richland
109-112. Idaho Operations Office
113-114. Iowa State College
115. Kansas City Operations Branch
116. Kellex Corporation
117-118. Kirtland Air Force Base
119-122. Knolls Atomic Power Laboratory
123-125. Los Alamos Scientific Laboratory
126. Mallinckrodt Chemical Works
127. Massachusetts Institute of Technology (A. Gaudin)
128. Massachusetts Institute of Technology (A. R. Kaufmann)
129-131. Mound Laboratory
132. National Advisory Committee for Aeronautics
133. National Bureau of Standards (R. D. Huntoon)
134. Naval Medical Research Institute
135-136. Naval Radiological Defense Laboratory
137. New Brunswick Laboratory
138-140. New York Operations Office
141. North American Aviation, Inc.
142-145. Carbide and Carbon Chemicals Company (Y-12)
146. Patent Branch, Washington
147. RAND Corporation
148. Sandia Corporation
149. Santa Fe Operations Office

150-164. Technical Information Service, Oak Ridge
165-167. USAF, NEPA Office
168-169. U. S. Geological Survey (T. B. Nolan)
170-171. U. S. Public Health Service
172. University of California at Los Angeles
173-177. University of California Radiation Laboratory
178-179. University of Rochester
180. University of Washington
181. Savannah River Operations Office, Wilmington
182. Western Reserve University
183-186. Westinghouse Electric Corporation
187. Yale University
188-191. Atomic Energy Project, Chalk River
192. Chief of Naval Research
193. H. K. Ferguson Company
194. Harshaw Chemical Company
195. Isotopes Division (Mr. McCormick)
196-197. Library of Congress, Acquisition Department (J. W. Cormn)
198. National Bureau of Standards
199. National Research Council, Ottawa
200. Naval Research Laboratory
201-202. Nevis Cyclotron Laboratories
203-204. Oak Ridge Institute of Nuclear Studies
205-214. United Kingdom Scientific Mission (M. Greenhill)
215. USAF, Eglin Air Force Base (Technical Library)
216. USAF, Wright-Patterson Air Force Base (Rodney Nudenberg)
217-221. USAF, Wright-Patterson Air Force Base (CADO)
222. U. S. Army, Army Field Forces (Captain James Kerr)
223. U. S. Army, Atomic Energy Branch (Lt. Col. A. W. Betts)
224. U. S. Army, Director of Operations Research (Dr. Ellis Johnson)
225. U. S. Army, Office, Chief of Ordnance (Col. A. R. Del Campo)
226-227. U. S. Army, Office of the Chief Signal Officer (Curtis T. Clayton thru Major George C. Hunt)
228-230. U. S. Army, Technical Command (Col. J. H. Rothschild Attn: Technical Library)
231. UT-AEC Agricultural Research Program (Charles S. Hobbs)

Abstract

A 10-unit laboratory jar-test stirring device for determining optimum chemical dosage requirements was designed and built by groups of the Health Physics Division, Oak Ridge National Laboratory. For speed control, a gear shift-controlled drive is provided, which will permit peripheral velocities of 2.83 feet per second (rapid mix) and 0.71 feet per second (slow mix). A description of the unit, drawings, material requirements and estimated cost, excluding overhead, are included.

EXPERIMENTAL JAR TEST LABORATORY STIRRING DEVICE

by

Conrad P. Straub* and P.N. Hensley**

Because of the lack of sufficient basic data, coagulant dosage must be determined by cut-and-try procedures with jar tests using a laboratory stirring device. Through the use of such a device it is possible to determine the proper coagulant for a given water, sewage or industrial waste, the amount of coagulant required, and the optimum pH value for effective coagulation. Further, it is possible to observe the effects of small changes in any of the above factors.

In his discussion of mixing and flocculation (or coagulation) Hopkins[1] states that for baffled basins a good floc will be formed by mixing for 15 to 30 minutes at a peripheral velocity of 1 to 1.5 feet

---

*Sanitary Engineer, Public Health Service, assigned to the Health Physics Division, Oak Ridge National Laboratory, Oak Ridge, Tennessee.

**Instrument Maker, Health Physics Division Research Shop, Oak Ridge National Laboratory, Oak Ridge, Tennessee.

[1]Hopkins, Edward S., Water Purification Control. The Williams and Wilkins Company, Baltimore, Maryland, 1948. Page 10.

per second. In processes in which mechanical stirring is utilized he suggests that the initial paddles should operate at a peripheral speed of 4.5 feet per second (rapid mix) and the final paddles at not less than 0.75 feet per second (slow mix) for a total time of 40 minutes.

Many types of stirrers have been built for jar test studies; some have been very elaborate, others very simple. Several commercial models are available. The data available on three such units have been tabulated and are shown in Table 1. These units have variable speed electric motors or rheostat controlled drives. Our experience has shown that the variable speed electric motor-driven units do not operate very satisfactorily because of difficulties in maintaining sufficiently low constant speeds. In addition, the first unit listed in the table has speeds in excess of those suggested by Hopkins. The other two units described have operating ranges equivalent to those that have been given; however, it will be noted that they, like the first unit listed, are all six-unit stirrers.

Other units have been described in the literature by various authors[2, 3, 4, 5] and are similar to those available commercially. One exception is the unit in use in the Sanitary Engineering Laboratory, Harvard University[5]. This unit, which is used for study purposes, has six paddles driven by an electric motor with a rheostat speed control. Under each paddle a lens has been installed to produce a Tyndall beam, from a light source in the base of the unit, to assist in detecting the time of the first floc appearance and the nature of the floc. This unit has been used as a basis for the design of the unit described herein which was built in the Health Physics Research Shop.

As developed, the unit includes a two-speed gear shift-controlled drive for operating the ten stirrers, and facilities for

---

[2]Phelps, Earle B. Public Health Engineering, Vol. 1. John Wiley and Sons, New York, New York. 1948. Page 459.

[3]Cox, Charles R. Laboratory Control of Water Purification. Case-Sheppard-Mann Publishing Corporation, New York, New York. 1946. Page 184.

[4]Davis, Calvin V. Handbook of Applied Hydraulics. Section 17. Water Treatment by Thomas R. Camp. McGraw-Hill Book Company, Inc., New York, New York. 1942. Page 803.

[5]Fair, Gordon M. Harvard Notes on Water Supply and Treatment. 1941. Mimeographed Sheet Number 1249.

the production of a Tyndall beam through the base of each jar placed on the bed of the unit. The two speeds selected are in accordance with those suggested by Hopkins, and experience has shown that they are satisfactory. For rapid mix (about 5 minutes duration) the samples are stirred at a peripheral velocity of 2.83 feet per second and for slow mix at a peripheral velocity is 0.71 feet per second which correspond to 216 and 54 revolutions per minute, respectively.

The unit has an aluminum frame, is light in weight, is rugged and has interchangeable parts. The gear drives may be varied to cover other speed ranges where they may be required, and changes may be made with ease. A photograph of the unit is shown as Figure 1 and dimensions will be found in the attached series of drawings (Drawing numbers D8991 - 8999). Material requirements will be found on Drawing No. D-9000.

It is estimated that the unit will cost about $325 to $350, excluding overhead.

Acknowledgements

The writers wish to acknowledge the modifications to the gear housing suggested by Mr. E.W. Davis. These have been incorporated in the design.

Table 1

Commerical Laboratory Stirring Devices

Model	Cost*	Number of Stirring Units	Drive Mechanism	Speeds R.P.M.	Speeds Ft./Sec.**
A	$120	6	Vari-speed motor with positive gear drive in conjunction with an electric speed governor instead of rheostat	250-1000	3.27-13.1
B	$125	6	Rheostat, enclosed in a metal protective box	15-110 Speed indicated by tachometer	0.197-1.44
C	$175	6	Rheostat control	10-100	0.131-1.31

*Cost as given in catalog.
**Assuming a 1 inch by 3 inch paddle.

UNCLASSIFIED
PHOTO 7087

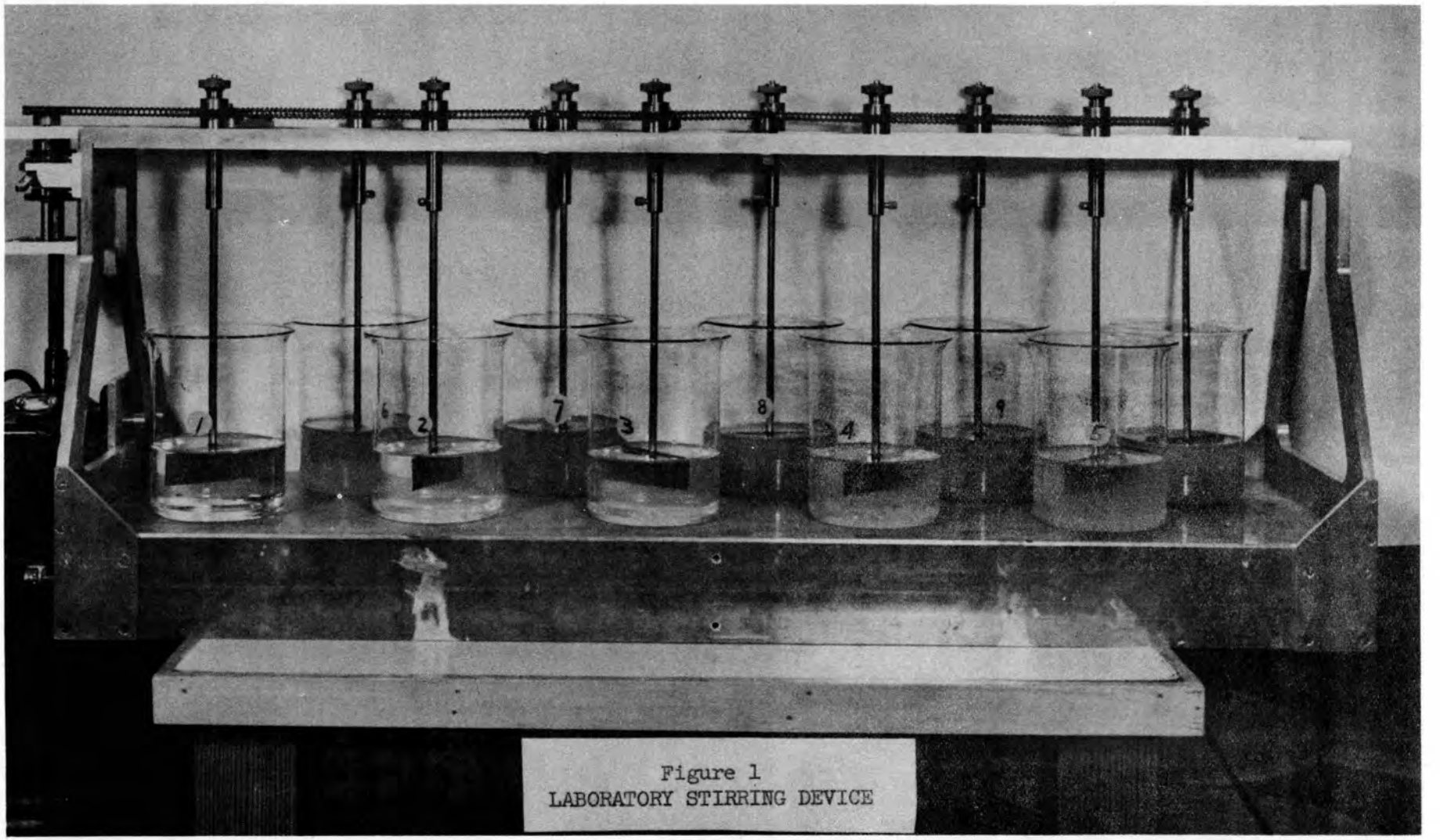

Figure 1
LABORATORY STIRRING DEVICE

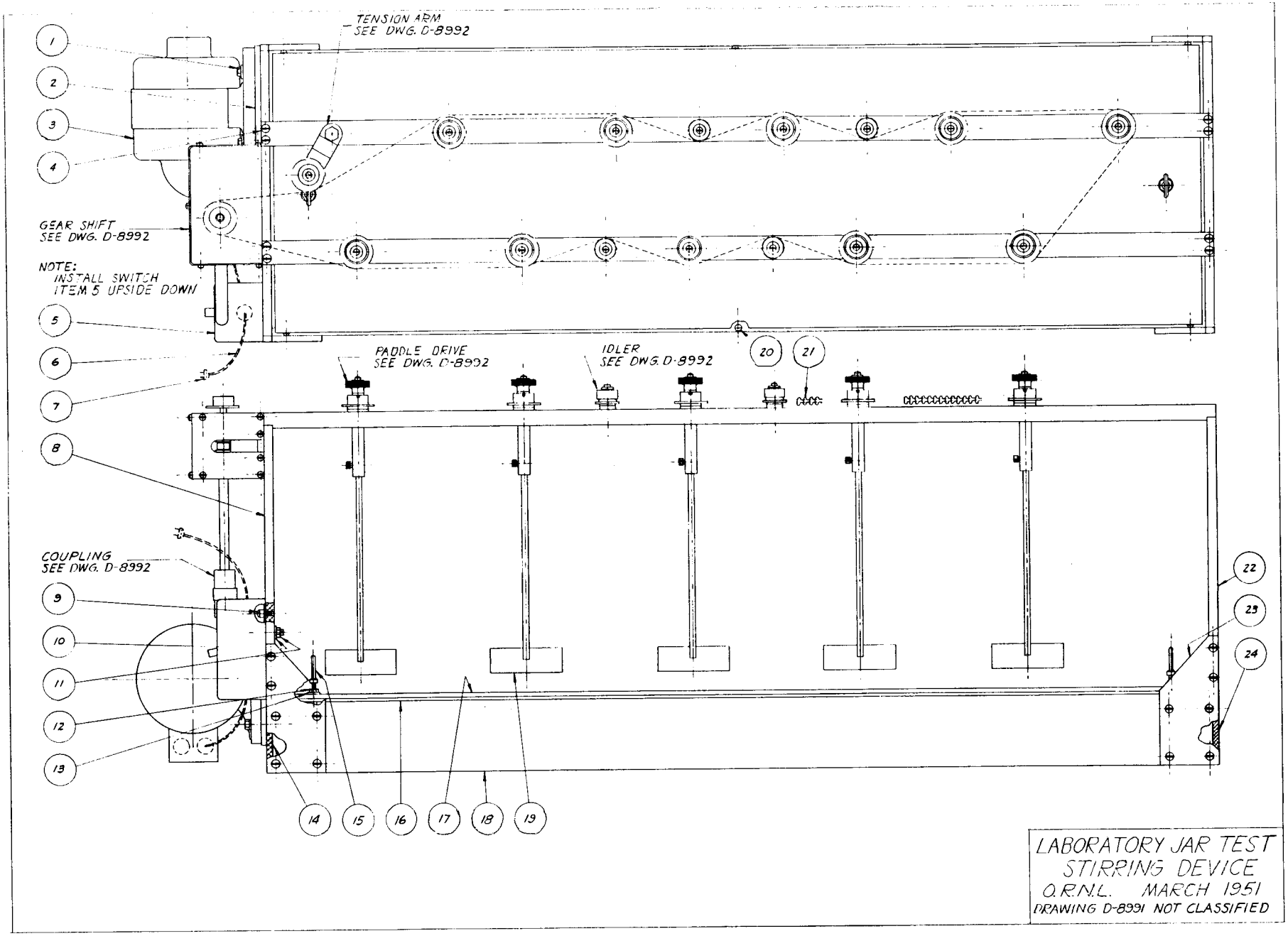
TENSION ARM
SEE DWG. D-8992
GEAR SHIFT
SEE DWG. D-8992
NOTE:
INSTALL SWITCH
ITEM 5 UPSIDE DOWN
PADDLE DRIVE
SEE DWG. D-8992
IDLER
SEE DWG. D-8992
COUPLING
SEE DWG. D-8992
1
2
3
4
5
6
7
8
9
10
11
12
13
14
15
16
17
18
19
20
21
22
23
24
LABORATORY JAR TEST
STIRRING DEVICE
O.R.N.L. MARCH 1951
DRAWING D-8991 NOT CLASSIFIED

FIG. 2

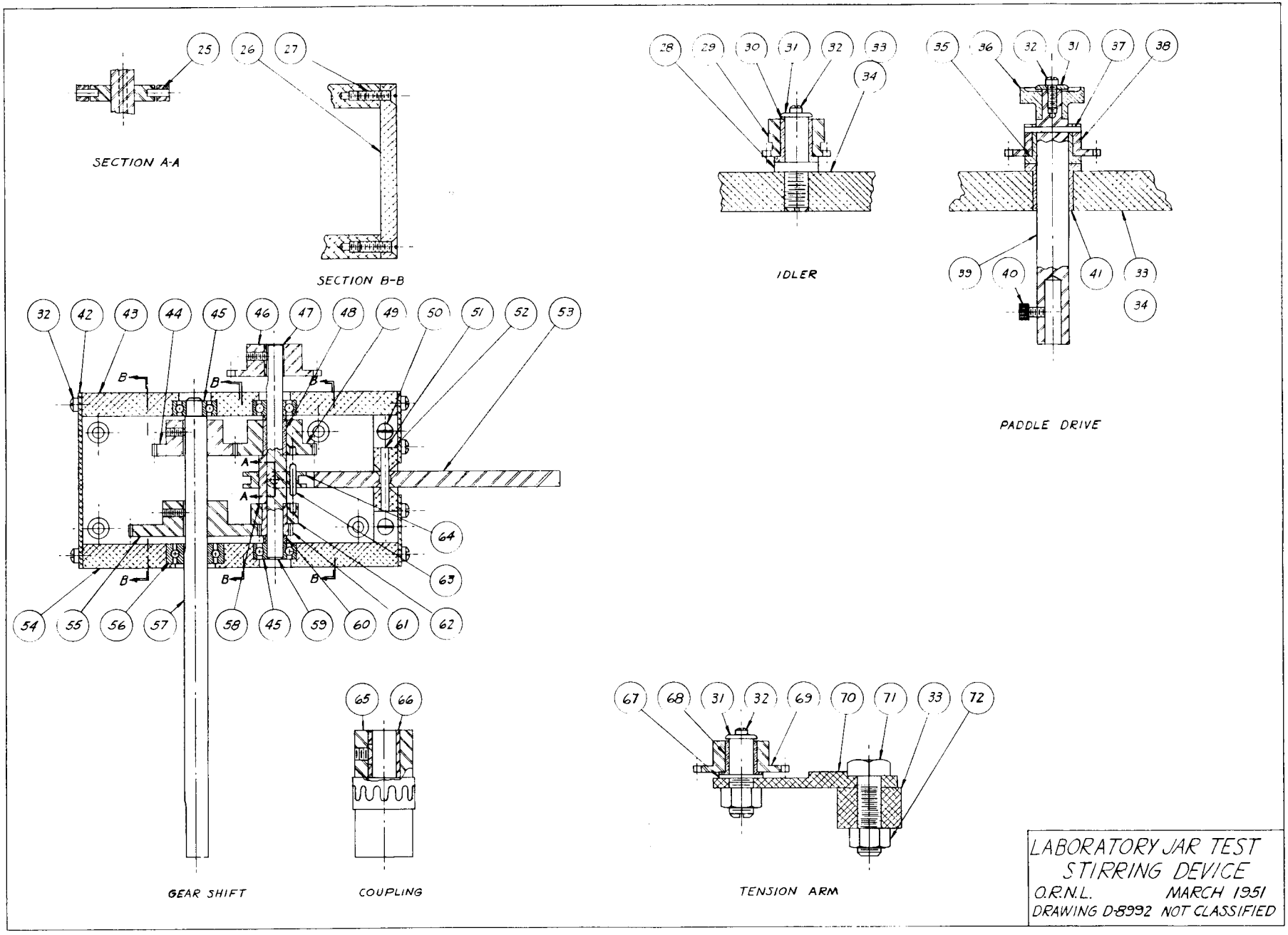
SECTION A-A
SECTION B-B
IDLER
PADDLE DRIVE
GEAR SHIFT
COUPLING
TENSION ARM
LABORATORY JAR TEST
STIRRING DEVICE
O.R.N.L. MARCH 1951
DRAWING D-8992 NOT CLASSIFIED

FIG. 3

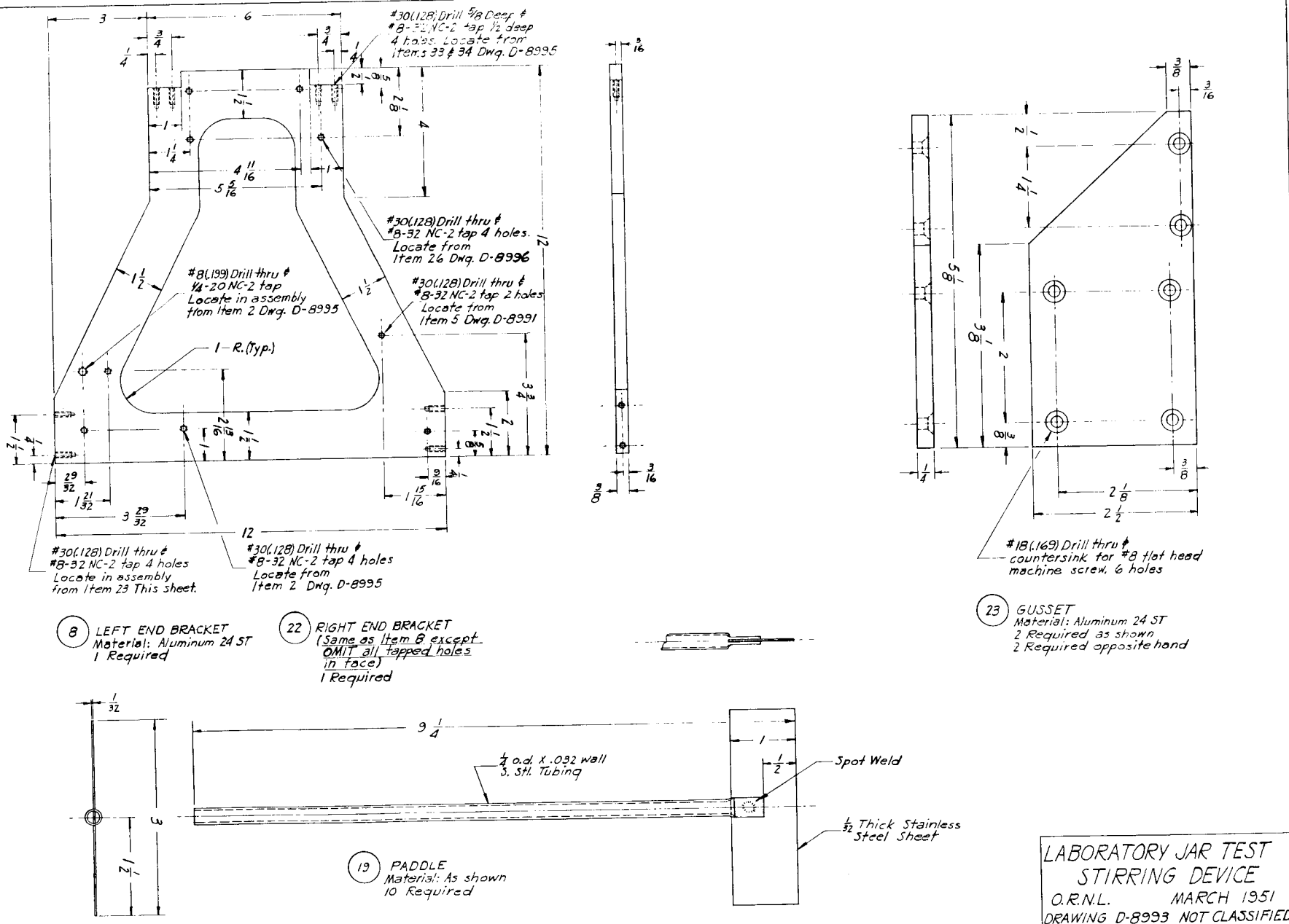
#30(.128) Drill 5/8 Deep ∅ #8-32 NC-2 tap 1/2 deep 4 holes. Locate from Items 33 & 34 Dwg. D-8995
#30(.128) Drill thru ∅ #8-32 NC-2 tap 4 holes. Locate from Item 26 Dwg. D-8996
#8(.199) Drill thru ∅ 1/4-20 NC-2 tap Locate in assembly from Item 2 Dwg. D-8995
#30(.128) Drill thru ∅ #8-32 NC-2 tap 2 holes Locate from Item 5 Dwg. D-8991
1 - R. (Typ.)
#30(.128) Drill thru ∅ #8-32 NC-2 tap 4 holes Locate in assembly from Item 23 This sheet.
#30(.128) Drill thru ∅ #8-32 NC-2 tap 4 holes Locate from Item 2 Dwg. D-8995
#18(.169) Drill thru ∅ countersink for #8 flat head machine screw. 6 holes
8 LEFT END BRACKET
Material: Aluminum 24 ST
1 Required
22 RIGHT END BRACKET
(Same as Item 8 except OMIT all tapped holes in face)
1 Required
23 GUSSET
Material: Aluminum 24 ST
2 Required as shown
2 Required opposite hand
1/4 o.d. X .032 wall S. Stl. Tubing
Spot Weld
1/32 Thick Stainless Steel Sheet
19 PADDLE
Material: As shown
10 Required
LABORATORY JAR TEST STIRRING DEVICE
O.R.N.L. MARCH 1951
DRAWING D-8993 NOT CLASSIFIED

FIG. 4

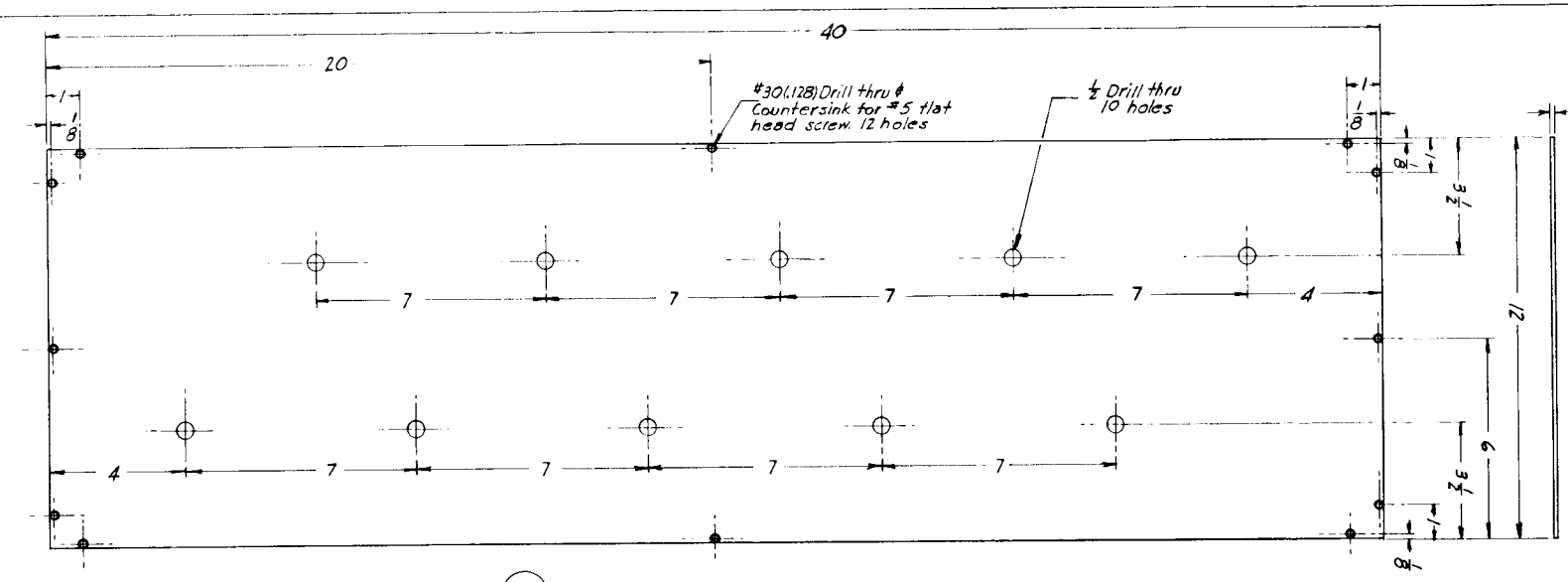

(16) TOP
Material: Aluminum 24 ST
1 Required

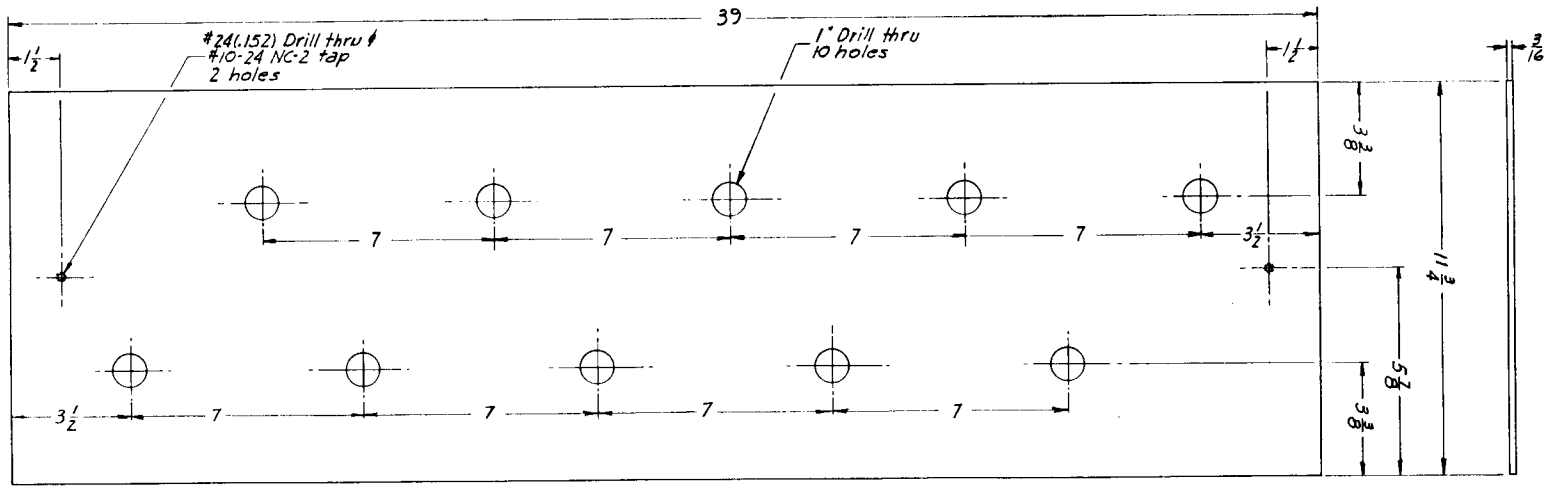

(17) TOP INSULATOR
Material: Asbestos Sheet
1 Required

LABORATORY JAR TEST
STIRRING DEVICE
O.R.N.L. MARCH 1951
DRAWING D-8994 NOT CLASSIFIED

FIG. 5

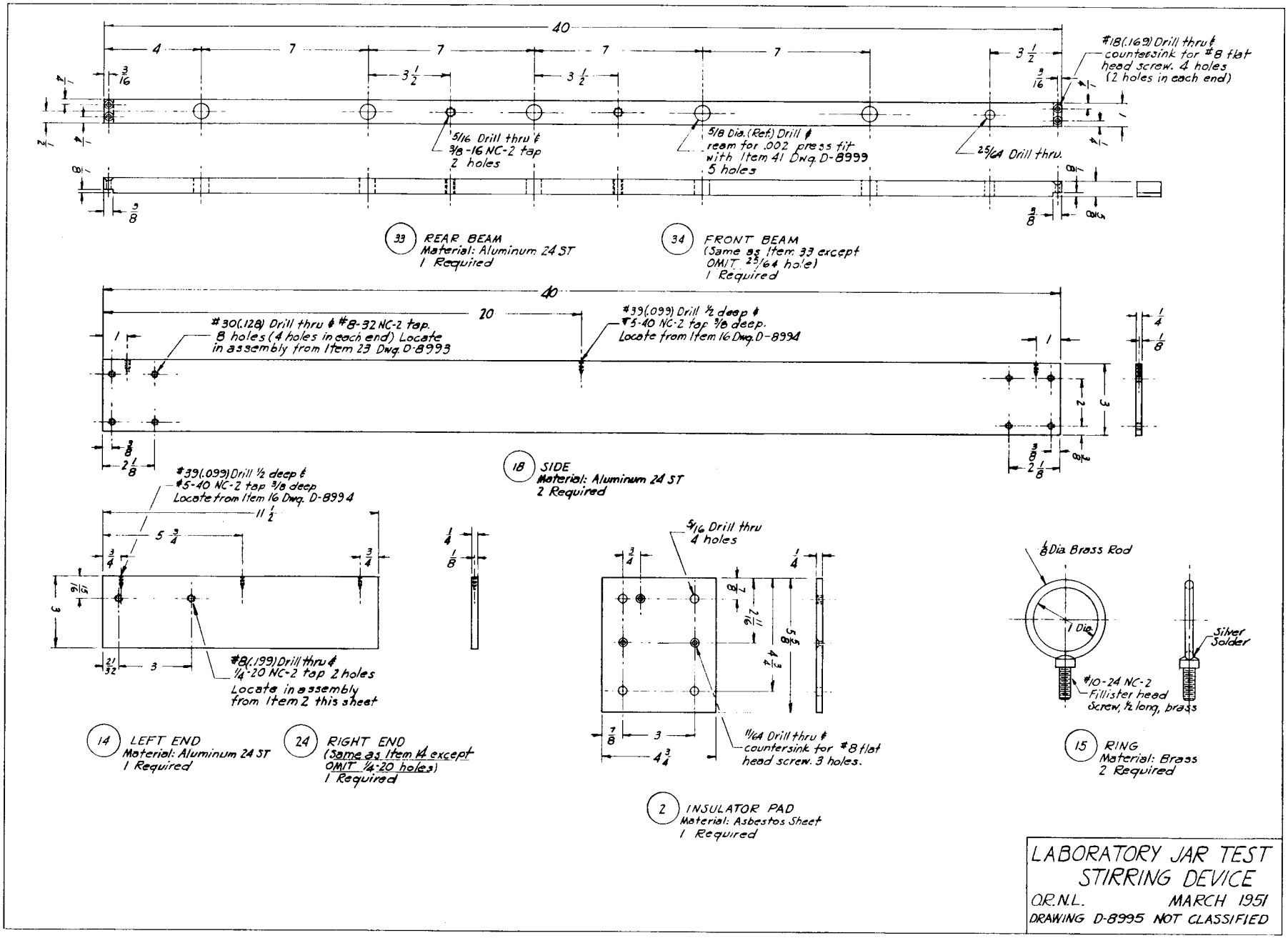
#18(.169) Drill thru & countersink for #8 flat head screw. 4 holes (2 holes in each end)
5/16 Drill thru & 3/8-16 NC-2 tap 2 holes
5/8 Dia. (Ref.) Drill & ream for .002 press fit with Item 41 Dwg. D-8999 5 holes
25/64 Drill thru.
33 REAR BEAM
Material: Aluminum 24 ST
1 Required
34 FRONT BEAM
(Same as Item 33 except OMIT 25/64 hole)
1 Required
#30(.128) Drill thru & #8-32 NC-2 tap. 8 holes (4 holes in each end) Locate in assembly from Item 23 Dwg. D-8993
#39(.099) Drill 1/2 deep & #5-40 NC-2 tap 3/8 deep. Locate from Item 16 Dwg. D-8994
18 SIDE
Material: Aluminum 24 ST
2 Required
#39(.099) Drill 1/2 deep & #5-40 NC-2 tap 3/8 deep Locate from Item 16 Dwg. D-8994
#8(.199) Drill thru & 1/4-20 NC-2 tap 2 holes Locate in assembly from Item 2 this sheet
14 LEFT END
Material: Aluminum 24 ST
1 Required
24 RIGHT END
(Same as Item 14 except OMIT 1/4-20 holes)
1 Required
5/16 Drill thru 4 holes
11/64 Drill thru & countersink for #8 flat head screw. 3 holes.
2 INSULATOR PAD
Material: Asbestos Sheet
1 Required
1/8 Dia Brass Rod
1 Dia.
Silver Solder
#10-24 NC-2 Fillister head Screw, 1/2 long, brass
15 RING
Material: Brass
2 Required
LABORATORY JAR TEST STIRRING DEVICE
O.R.N.L. MARCH 1951
DRAWING D-8995 NOT CLASSIFIED

FIG. 6

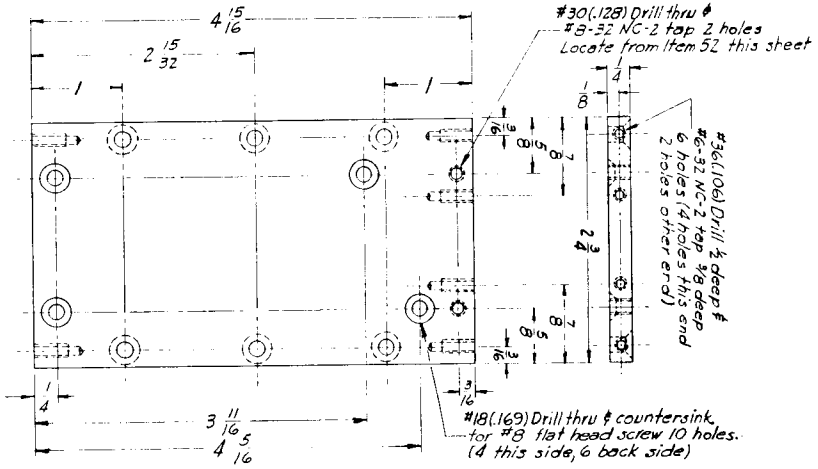

26 BACK
Material: Aluminum 24 ST
1 Required

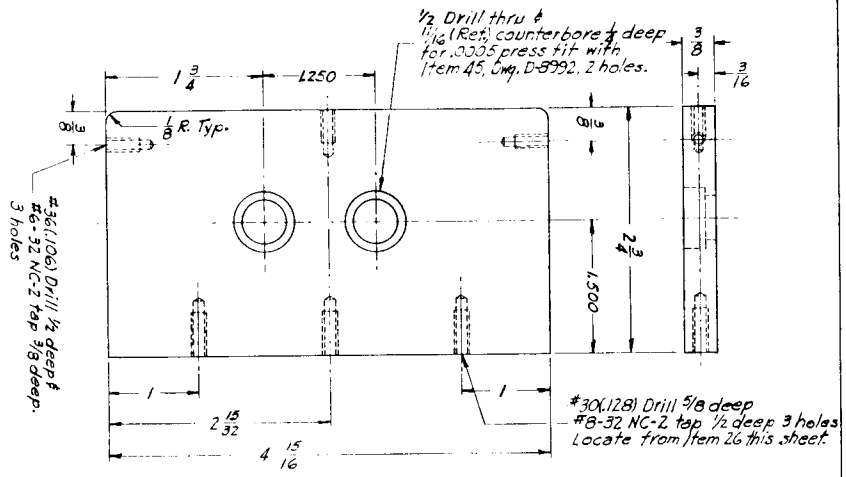

43 TOP
Material: Aluminum 24 ST
1 Required

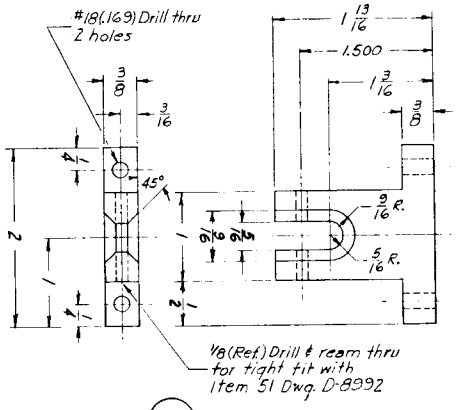

52 BRACKET
Material: Aluminum 24 ST
1 Required

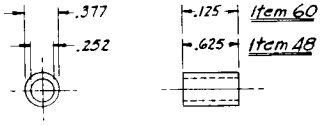

48 BEARING
Material: Make from "Bost-Bronze" bearing. Cat. No. B-46-10
1 Required

60 SPACER
Material: Make from excess of Item 48.
1 Required

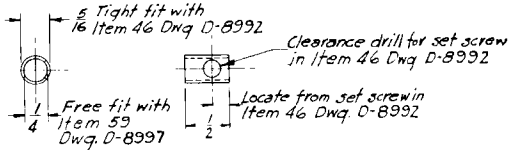

47 BUSHING
Material: Steel
1 Required

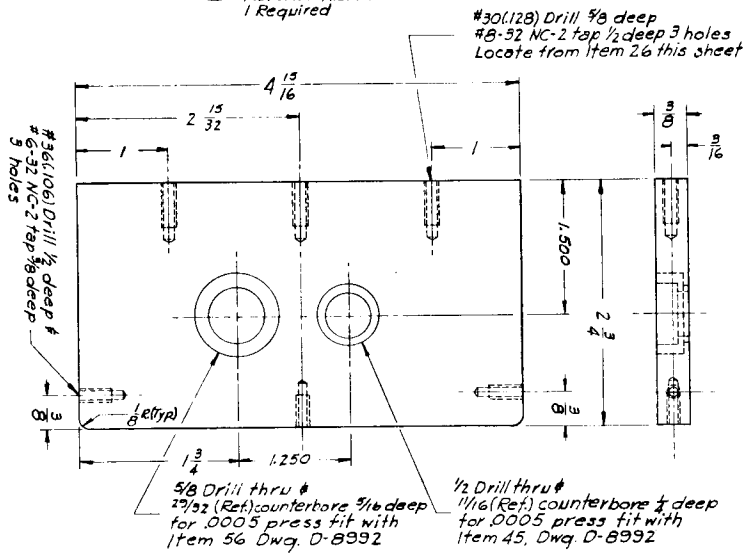

54 BOTTOM
Material: Aluminum 24 ST
1 Required

LABORATORY JAR TEST
STIRRING DEVICE
O.R.N.L. MARCH 1951
DRAWING D-8996 NOT CLASSIFIED

FIG. 7

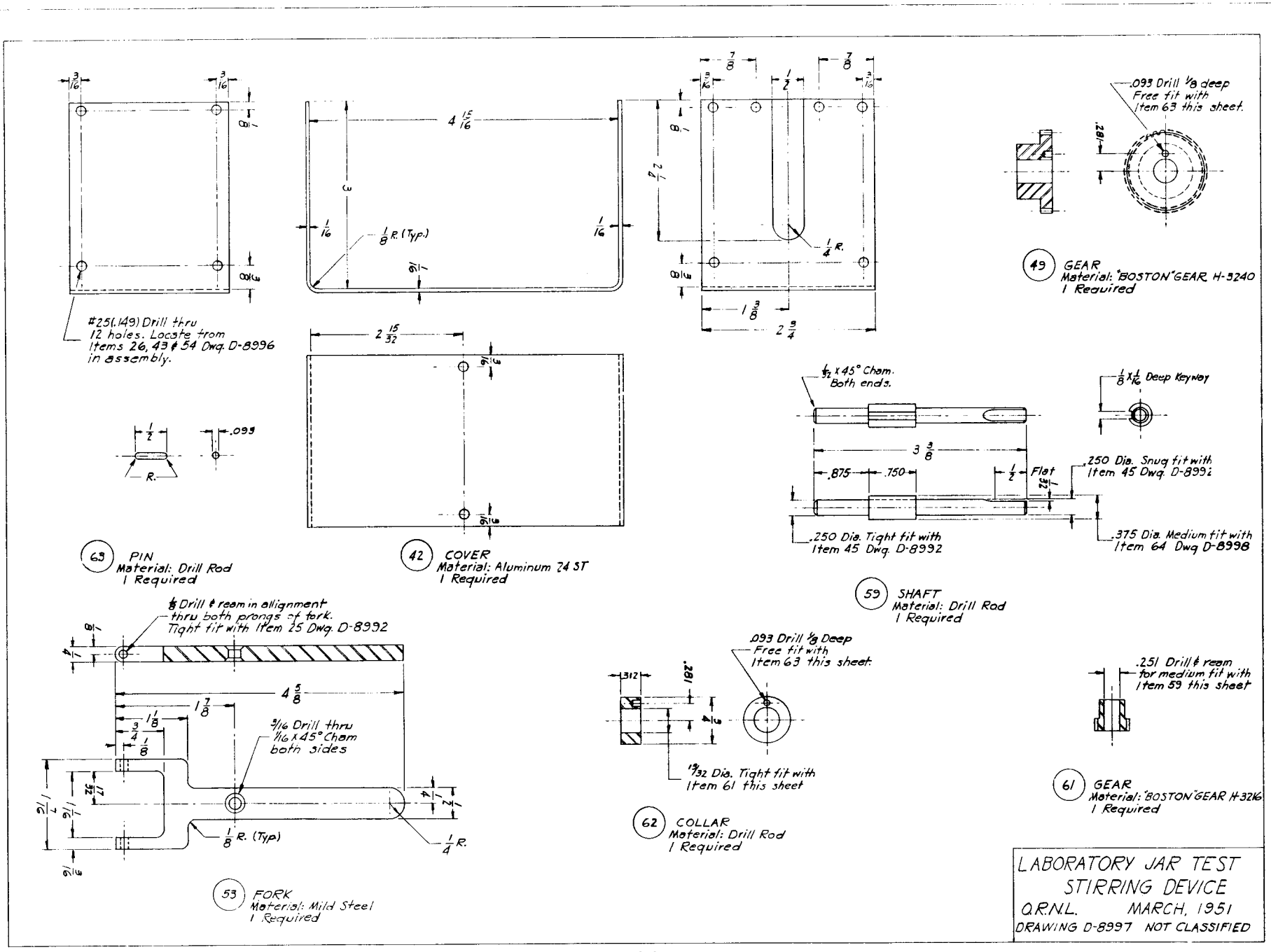
#25(.149) Drill thru
12 holes. Locate from
Items 26, 43 & 54 Dwg. D-8996
in assembly.
1/8 R. (Typ.)
1/4 R.
.093 Drill 1/8 deep
Free fit with
Item 63 this sheet.
.281"
(49) GEAR
Material: "BOSTON" GEAR H-3240
1 Required
(63) PIN
Material: Drill Rod
1 Required
(42) COVER
Material: Aluminum 24 ST
1 Required
1/32 x 45° Cham.
Both ends.
1/8 x 1/16 Deep Keyway
.250 Dia. Snug fit with
Item 45 Dwg. D-8992
.250 Dia. Tight fit with
Item 45 Dwg. D-8992
.375 Dia. Medium fit with
Item 64 Dwg. D-8998
Flat
(59) SHAFT
Material: Drill Rod
1 Required
1/8 Drill & ream in alignment
thru both prongs of fork.
Tight fit with Item 25 Dwg. D-8992
9/16 Drill thru
1/16 x 45° Cham
both sides
1/8 R. (Typ)
1/4 R.
(53) FORK
Material: Mild Steel
1 Required
.093 Drill 1/8 Deep
Free fit with
Item 63 this sheet.
.281"
19/32 Dia. Tight fit with
Item 61 this sheet
(62) COLLAR
Material: Drill Rod
1 Required
.251 Drill & ream
for medium fit with
Item 59 this sheet
(61) GEAR
Material: "BOSTON" GEAR H-3216
1 Required
LABORATORY JAR TEST
STIRRING DEVICE
O.R.N.L. MARCH, 1951
DRAWING D-8997 NOT CLASSIFIED

FIG. 8

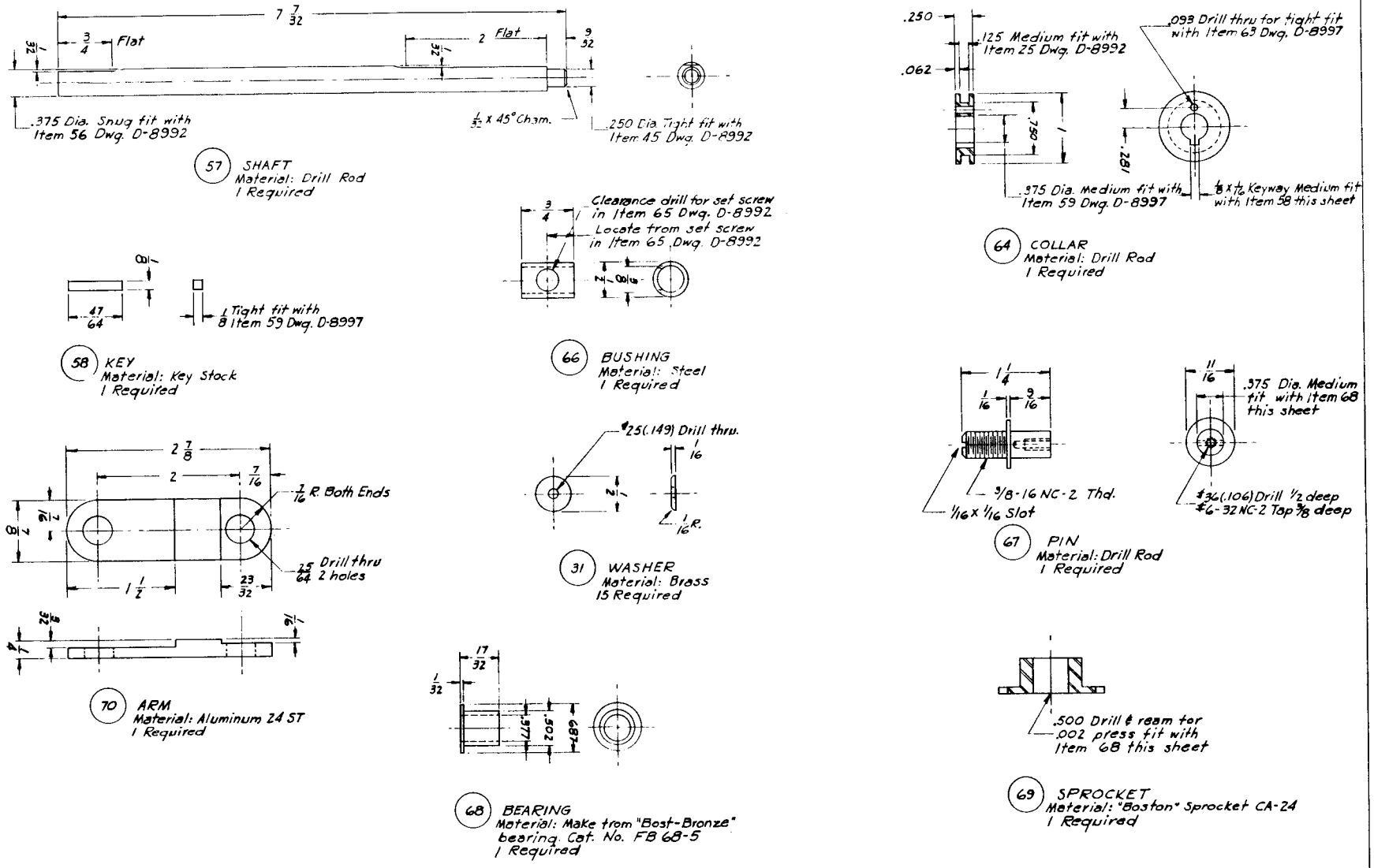
7 7/32
3/4 Flat
2 Flat
9/32
.375 Dia. Snug fit with Item 56 Dwg. D-8992
1/32 x 45° Cham.
.250 Dia. Tight fit with Item 45 Dwg. D-8992
57 SHAFT
Material: Drill Rod
1 Required
Clearance drill for set screw in Item 65 Dwg. D-8992
Locate from set screw in Item 65 Dwg. D-8992
Tight fit with 1/8 Item 59 Dwg. D-8997
58 KEY
Material: Key Stock
1 Required
66 BUSHING
Material: Steel
1 Required
2 7/8
2
7/16
7/16 R. Both Ends
25/64 Drill thru 2 holes
1 1/2
23/32
#25(.149) Drill thru.
1/16 R.
31 WASHER
Material: Brass
15 Required
70 ARM
Material: Aluminum 24 ST
1 Required
17/32
1/32
.977
.902
.687
68 BEARING
Material: Make from "Bost-Bronze" bearing. Cat. No. FB 68-5
1 Required
.250
.062
.125 Medium fit with Item 25 Dwg. D-8992
.750
1
.093 Drill thru for tight fit with Item 63 Dwg. D-8997
.281
.375 Dia. Medium fit with Item 59 Dwg. D-8997
1/8 x 1/16 Keyway Medium fit with Item 58 this sheet
64 COLLAR
Material: Drill Rod
1 Required
1 1/4
1/16
9/16
3/8-16 NC-2 Thd.
1/16 x 1/16 Slot
11/16
.375 Dia. Medium fit with Item 68 this sheet
#36(.106) Drill 1/2 deep
#6-32 NC-2 Tap 3/8 deep
67 PIN
Material: Drill Rod
1 Required
.500 Drill & ream for .002 press fit with Item 68 this sheet
69 SPROCKET
Material: "Boston" Sprocket CA-24
1 Required
LABORATORY JAR TEST
STIRRING DEVICE
O.R.N.L. MARCH 1951
DRAWING D-8998 NOT CLASSIFIED

FIG. 9

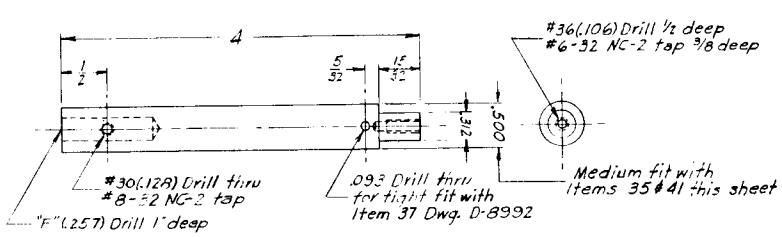

(39) SHAFT
Material: Drill Rod
10 Required

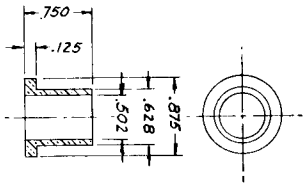

(41) BEARING
Material: Make from "Bost-Bronze" bearing. Cat. No. FB 810-8
10 Required

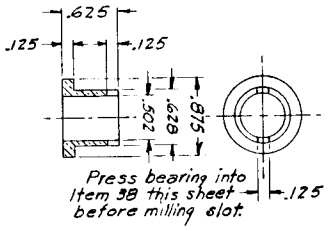

(35) BEARING
Material: Make from "Bost-Bronze" bearing. Cat. No. FB 810-8
10 Required

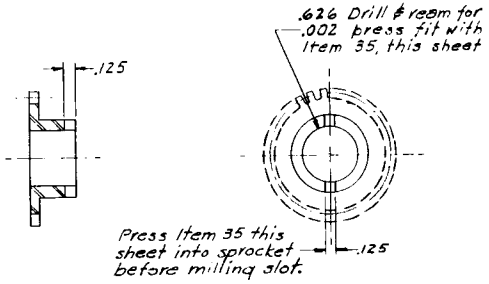

(38) SPROCKET
Material: "Boston" Sprocket CA-24
10 Required

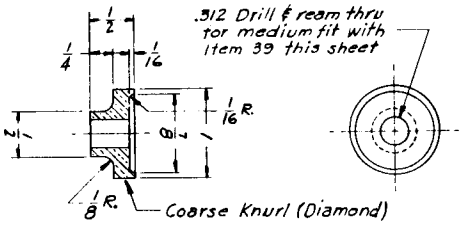

(36) KNOB
Material: "Bunting" Bronze
10 Required

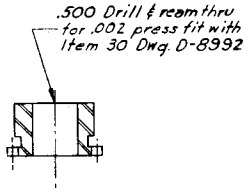

(29) SPROCKET
Material: "Boston" Sprocket CA-16
4 Required

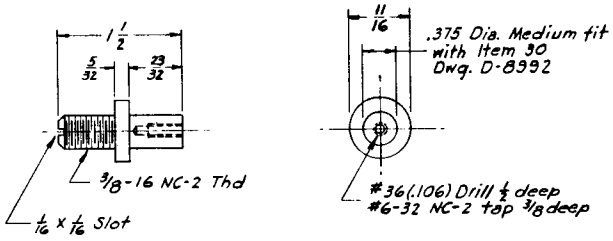

(28) PIN
Material: Drill Rod
4 Required

LABORATORY JAR TEST
STIRRING DEVICE
O.R.N.L. MARCH 1951
DRAWING D-8999 NOT CLASSIFIED

FIG. 10

MATERIALS LIST

ITEM NO.	DWG. NO.	QTY.	NAME	SIZE	MATERIAL
1	D-8991	4	Hex Head Bolt	1/4-20 x 1 1/8 Lg.	Stl.
2	D-8995	1	Insulator Pad	4 3/4 x 5 5/8 x 1/4 Thk.	Asb. Sheet
3	D-8991	1	Ratio Motor "Boston"	MB 5832S	
4	D-8991	8	Flat Head Screw	#8-32 x 7/8 Lg.	Stl.
5	D-8991	1	Switch "Allen Bradley"	Bulletin 600 - Size "B" Form 51 Type 1	Heater P 14
6	D-8991	1	Wire	3 Lead Length	As Req'd.
7	D-8991	1	Male Plug (Elect.)	3 Lead	
8	D-8993	1	Left End Bracket	12 x 12 x 3/8 Thk.	Al. 24 St.
9	D-8991	2	Fillister Hd. Screw	#8-32 x 1/2 Lg.	Stl.
10	D-8991	5	Flat Washer	For 1/4 Bolt	Stl.
11	D-8991	1	Hex Nut	1/4-20	Stl.
12	D-8991	2	Hex Nut	#10-24	Brass
13	D-8991	2	Flat Washer	For #10 Screw	Brass
14	D-8995	1	Left End	3 x 11 1/2 x 1/4 Thk.	Al. 24 St.
15	D-8995	2	Ring	As Shown	Brass
16	D-8994	1	Top	12 x 40 x 1/8 Thk.	Al. 24 St.
17	D-8994	1	Top Insulator	11 3/4 x 39 x 3/16 Thk.	Asb. Sheet
18	D-8995	2	Side	3 x 40 x 1/4 Thk.	Al. 24 St.
19	D-8993	10	Paddle	As Shown	As Shown
20	D-8991	12	Flat Head Screw	#5-40 x 3/8 Lg.	Stl.
21	D-8991	1	Ladder Chain	#1-A High Tensile Coppered	Stl. 8 Ft.
22	D-8993	1	Right End Bracket	12 x 12 x 3/8 Thk.	Al. 24 St.
23	D-8993	4	Gusset	2 1/2 x 5 1/8 x 1/4 Thk.	Al. 24 St.
24	D-8995	1	Right End	3 x 11 1/2 x 1/4 Thk.	Al. 24 St.
25	D-8992	2	Pin	1/8 Dia. x 11/32 Lg.	Drill Rod
26	D-8996	1	Back	2 3/4 x 4 15/16 x 1/4 Thk.	Al. 24 St.
27	D-8992	37	Flat Head Screw	#8-32 x 5/8 Lg.	Stl.
28	D-8999	4	Pin	11/16 OD x 1 1/2 Lg.	Drill Rod
29	D-8999	4	Sprocket "Boston"	CA-16	Stl.
30	D-8992	4	Bearing	FB-68-5	Bost. Brnz.
31	D-8998	15	Washer	1/2 Dia. x 1/16 Thk.	Brass
32	D-8992	27	Fillister Hd. Screw	#6-32 x 3/8 Lg.	Stl.
33	D-8995	1	Rear Beam	1 x 40 x 5/8 Thk.	Al. 24 St.
34	D-8995	1	Front Beam	1 x 40 x 5/8 Thk.	Al. 24 St.
35	D-8999	10	Bearing	FB-810-8	Bost. Brnz.
36	D-8999	10	Knob	1 OD x 1/2 Lg.	Bunting Brnz.

LABORATORY JAR TEST STIRRING DEVICE

O.R.N.L. MARCH 1951

DRAWING D-9000-A NOT CLASSIFIED

FIG. 11

MATERIALS LIST

ITEM NO	DWG. NO.	QTY.	NAME	SIZE	MATERIAL
37	D-8992	10	Pin	.093 OD x 7/8 Lg.	Drill Rod
38	D-8999	10	Sprocket "Boston"	CA-24	Stl.
39	D-8999	10	Shaft	½ OD x 4 Lg.	Drill Rod
40	D-8992	10	Knurled Soc. Hd. Screw	#8-32 x ¼ Lg.	Stl.
41	D-8999	10	Bearing	FB 810-8	Bost. Brnz.
42	D-8997	1	Cover	As Shown	Al. 24 St.
43	D-8996	1	Top	2¾ x 4 15/16 x 3/8 Thk.	Al. 24 St.
44	D-8992	1	Gear "Boston"	H-3240	Stl.
45	D-8992	3	Ball Bearing "Nice"	1602 DS	
46	D-8992	1	Sprocket "Boston"	CA-24	Stl.
47	D-8996	1	Bushing	5/16 OD x ¼ ID x ½ Lg.	Stl.
48	D-8996	1	Bearing	B-46-10	Bost. Brnz.
49	D-8997	1	Gear "Boston"	H-3240	Stl.
50	D-8992	2	Fillister Hd. Screw	#8-32 x 5/8 Lg.	Stl.
51	D-8992	1	Pin	1/8 OD x 1 Lg.	Drill Rod
52	D-8996	1	Bracket	1 13/16 x 2 x 3/8 Thk.	Al. 24 St.
53	D-8997	1	Fork	1 7/16 x 4 5/8 x ¼ Thk.	Mild Stl.
54	D-8996	1	Bottom	2¾ x 4 15/16 x 3/8 Thk.	Al. 24 St.
55	D-8992	1	Gear "Boston"	H-3264	Stl.
56	D-8992	1	Ball Bearing "Nice"	1606 DS	
57	D-8998	1	Shaft	.375 Dia. x 7 7/32 Lg.	Drill Rod
58	D-8998	1	Key	1/8 x 1/8 x 47/64	Key Stock
59	D-8997	1	Shaft	.375 Dia. x 3 3/8 Lg.	Drill Rod
60	D-8996	1	Spacer	As Shown	As Shown
61	D-8997	1	Gear "Boston"	H-3216	Stl.
62	D-8997	1	Collar	¾ OD x .312 Lg.	Drill Rod
63	D-8997	1	Pin	.093 Dia. x ½ Lg.	Drill Rod
64	D-8998	1	Collar	1 OD x .250	Drill Rod
65	D-8992	1	Coupling "Boston"	FA-10-½"	Stl.
66	D-8998	1	Bushing	3/8 ID x ½ OD x ¾ Lg.	Stl.
67	D-8998	1	Pin	11/16 OD x 1¼ Lg.	Drill Rod
68	D-8998	1	Bearing	FB-68-5	Bost. Brnz.
69	D-8998	1	Sprocket "Boston"	CA-24	Stl.
70	D-8998	1	Arm	7/8 x 2 7/8 x ¼ Thk.	Al. 24 St.
71	D-8992	1	Hex. Hd. Bolt	3/8-16 x 1¼ Lg.	Stl.
72	D-8992	2	Hex. Nut	3/8-16	Stl.

LABORATORY JAR TEST STIRRING DEVICE
O.R.N.L. MARCH 1951
DRAWING D-9000-B NOT CLASSIFIED

FIG. 12