SECRET

Training School Library

ORNL 1000
9a

Chemistry-Separation Processes for Plutonium and Uranium

MARTIN MARIETTA ENERGY SYSTEMS LIBRARIES
3 4456 0360865 6

LABORATORY RECORDS

AEC RESEARCH AND DEVELOPMENT REPORT

CHEMICAL TECHNOLOGY DIVISION QUARTERLY PROGRESS REPORT FOR PERIOD ENDING FEBRUARY 20, 1951

Classification Cancelled
Or Changed To
By Authority Of AEC 9.13.71
By G. Goldberg Date 11.10.71

OAK RIDGE NATIONAL LABORATORY
CENTRAL RESEARCH LIBRARY
CIRCULATION SECTION
4500N ROOM 175
LIBRARY LOAN COPY
DO NOT TRANSFER TO ANOTHER PERSON
If you wish someone else to see this report, send in name with report and the library will arrange a loan.
UCN-7969 (3 9-77)

OAK RIDGE NATIONAL LABORATORY
OPERATED BY
CARBIDE AND CARBON CHEMICALS COMPANY
A DIVISION OF UNION CARBIDE AND CARBON CORPORATION
UCC
POST OFFICE BOX P
OAK RIDGE, TENNESSEE

SECRET

[redacted]

ORNL-1000

This document consists of 64 pages.

Copy 9 of 135 . Series A

Contract No. W-7405, eng. 26

CHEMICAL TECHNOLOGY DIVISION

F. L. Steahly, Division Director
F. R. Bruce, Laboratory Chief
J. O. Davis, Unit Operations Chief
H. K. Jackson, Pilot Plant Chief
F. L. Culler, Process Design Chief

QUARTERLY PROGRESS REPORT

for Period Ending February 20, 1951

Edited by:

W. K. Eister

DATE ISSUED MAY 4 1951

OAK RIDGE NATIONAL LABORATORY
operated by
CARBIDE AND CARBON CHEMICALS COMPANY
A Division of Union Carbide and Carbon Corporation
Post Office Box P
Oak Ridge, Tennessee

[redacted]

MARTIN MARIETTA ENERGY SYSTEMS LIBRARIES
3 4456 0360865 6

INTERNAL DISTRIBUTION

1. G. T. Fe[redacted]beck (C&CCC)
2-3. Chemistry [redacted] Library
4. Physics Li[redacted]rary
5. Biology Li[redacted]ary
6. Health Physi[redacted]s Library
7. Metallurgy Li[redacted]rary
8-9. Training Schoo[redacted] Library
10-13. Central Files
14. C. E. Center
15. C. E. Larson
16. W. B. Humes (K-25)
17. W. D. Lavers (Y-12)
18. A. M. Weinberg
19. J. A. Swartout
20. E. D. Shipley
21. E. J. Murphy
22. F. C. VonderLage
23-24. F. L. Steahly
25. E. H. Taylor
26. A. H. Snell
27. A. Hollaender
28. K. Z. Morgan
29. D. W. Cardwe[redacted]
30. M. T. Kelle[redacted]
31. W. H. Pen[redacted]gton
32. W. K. Ei[redacted]er
33. F. L. C[redacted]ler
34. F. R. [redacted]uce
35. J. O. [redacted]avis
36. H. [redacted] Jackson
37. [redacted] R. S. Livingston
38. [redacted] C. P. Keim
[redacted]. G. H. Clewett
[redacted]0. C. D. Susano
41. F. W. Hurd (K-25)
42. S. Cromer (K-25)
43. R. E. Engberg
44. R. N. Lyon
45. C. E. Winters
46. C. B. Graham
47. G. E. Boyd
48. J. A. Lane
49. R. W. Stoughton
50-54. Central Files (O.P.)

EXTE[redacted]NA[redacted]ISTRIBUTION

55-60. Argonne National La[redacted]ratory
61. Armed Forces Speci[redacted]eapons Project
62-68. Atomic Energy Com[redacted]ssio[redacted], Washington
69-72. Brookhaven Natio[redacted]l Labo[redacted]atory
73-74. Carbide & Carbo[redacted] Chemica[redacted] Co. (K-25)
75-78. Carbide & Carb[redacted]n Chemicals [redacted]o. (Y-12)
79. Chicago Pate[redacted] Group
80-85. Du Pont Com[redacted]ny
86-92. General El[redacted]tric Company, Rich[redacted]nd
93. Hanford O[redacted]rations Office
94-97. Idaho Op[redacted]ations Office
98. Iowa St[redacted]te College
99. Kellex [redacted]orporation
100-103. Knoll[redacted] Atomic Power Laboratory
104-106. Los [redacted]lamos
107-109. Mo[redacted]d Laboratory
110. N[redacted]al Research Laboratory
111. [redacted]w Operations Office
112-115. [redacted]ew York Operations Office
116. [redacted] Patent Branch, Washington
117-131. Technical Information Services, Oak Ridge
132-1[redacted]. University of California Radiation Laboratory

[redacted]

Previous reports issued in this series are as follows:

ORNL 268	Period Ending May 31, 1949
ORNL 467	Period Ending August 31, 1949
ORNL 530	Period Ending November 30, 1949
ORNL 663	Period Ending February 28, 1950
ORNL 763	Period Ending May 31, 1950
ORNL 846	Period Ending August 31, 1950
ORNL 936	Period Ending November 20, 1950

[redacted]

TABLE OF CONTENTS

PERSONNEL 6

ABSTRACT 10

INTRODUCTION 11

SUMMARY 13

1. TBP METAL RECOVERY PROCESS 16

Feed Preparation 16
Column Study of the Uranium-Plutonium Flowsheet 16
Plutonium Product Evaporator — Corrosion Study 17
ORNL Metal Recovery Plant — Construction 18

2. SLUREX PROCESS FOR FEED MATERIALS PRODUCTION CENTER 19

3. PUREX PROCESS 21

Gas Evolution from Aluminum Jacket Dissolution 21
Gas Evolution from Uranium Dissolution 21
Removal of Radioactive Gases from Dissolver Off-Gas 22
Feed Pretreatment Study 23
Effect of Acid Concentration on Ruthenium Decontamination 24
Effect of Scrub Height on Column IA Decontamination 24
Fluoride as a Uranium-Plutonium Partitioning Agent 24
Column Tests of the Plutonium Second Cycle 25
Nitric Acid Recovery 25
Pilot Plant Packed-Column Test of Flowsheet No. 2 26
Displacement Fluid Study 29

4. RaLa PROCESS 31

Caustic Dissolution of Uranium-Aluminum Alloy 31
Uranium Dissolution and Barium Precipitation 33
Nitric Acid—Dowex 50 Ion-Exchange Procedure for Barium Purification 33
ORNL RaLa Plant Modification 35

5. IDAHO CHEMICAL PLANT DESIGN 37

Engineering and Equipment Flowsheets 37
Vessel Arrangements 37
Process Vessels 37
Process Instrumentation 37
General Construction Progress 38
Main Processing Building 38
Laboratory and Administration Building 38
Service Building 39
SF Storage Building 39
Waste Process Building 39
Waste Tank Farm 40
Dissolution of Uranium-Aluminum Alloy 40
Decontamination of Dissolver Off-Gas 41
Clarification of Uranium-Aluminum Alloy Solution 42

[redacted]

[redacted]

TABLE OF CONTENTS (Cont')

6. VOLATILITY STUDY 43

Plutonium Adsorption on Alundum 43
Electrofluorination of Uranium 43

7. RADIOCHEMICAL WASTE TREATMENT 45

Radiochemical Waste Evaporator 45
Cottrell Electrostatic Precipitator 45

8. ELECTROLYTIC DISSOLUTION STUDIES 46

Uranium in Nitric Acid 46
Uranium-Aluminum Alloy in Sodium Hydroxide 46

9. HOMOGENEOUS REACTOR CHEMISTRY 47

Uranium Trioxide—Bentonite Slurry 47
Uranyl Phosphate Slurry 47
Thorium Oxide—Bentonite Slurry 49
Synthesis of Montmorillonite Clay (Bentonite) 49
Fuel Processing 49

10. CHALK RIVER MATERIAL — FINAL CONCENTRATION AND PURIFICATION 52

11. SPECIAL EQUIPMENT DEVELOPMENT AND TESTING 54

Lead Shot Transfer Jet 54
Lapp Pulsafeeder Pump, Model CPS-1 54
Specific Gravity Probe for Boiling Solutions 54
Yarway and Velan Thermostatic Steam Traps 54
Swagelok Fittings (Crawford Fitting Company) 57
Radiation Stability Tests of Plastics 57
Vinyl Base Paint 57
Plastic Gasket Material 58
Vacuum Relief Valves for Steam Lines to Jets 58
Plastic Valve Test 58

12. DECONTAMINATION OF STAINLESS STEEL BY ELECTROSTRIPPING 62

PUBLICATIONS 63

[redacted]

[redacted]

LIST OF FIGURES

Fig. 4.1 Tentative MTR-RaLa Flowsheet — Caustic Sulfate Process 32

Fig. 4.2 Tentative MTR-RaLa Flowsheet — Purification of Barium by Ion Exchange 34

Fig. 11.1 Lead Shot Transfer Jet 55

Fig. 11.2 Probe Guards, Specific Gravity Control 56

Fig. 11.3 Plastic Plug Valve 59

Fig. 11.4 Plastic Diaphragm Valve 60

LIST OF TABLES

Table 1.1 TBP Metal Recovery Process — Uranium-Plutonium Flowsheet, HETS and Stage Requirements 17

Table 3.1 Purex Process - Flowsheet No. 2 27

Table 3.2 Purex Process - Flowsheet No. 2 28

Table 4.1 Variables Affecting the Yield of Barium Sulfate 36

Table 9.1 The Thermal Stability of Uranium Trioxide—Water Slurries Stabilized with Bentonite 48

Table 9.2 Capacity Loss of Dowex 50 Resin on Absorption of Radiation Energy from Co^{60} Gamma 50

[redacted] [redacted]

[redacted]

PERSONNEL

F. L. Steahly, Director — June Parrott, Secretary

- W. K. Eister, Special Assignment
- C. W. Schersten, Assistant to Director — Virginia Wells, Secretary; J. W. Clark, Technician; Aola Johnson, Janitress
- F. R. Bruce, Section Chief - Laboratory — Mary Pemberton, Secretary; C. J. Shipman, Technician
  - W. B. Lanham, Problem Leader - Purex
    - S. V. Castner(1)
    - G. A. Eaton
    - J. R. Flanary
    - R. G. Mansfield
    - V. J. Reilly(1)
    - E. B. Sheldon(1)
    - M. D. Snyder(1)
    - B. L. Taber(1)

    Technicians: L. A. Byrd; W. B. Howerton; E. R. Johns
  - R. E. Leuze, Problem Leader - Volatiltiy
    - C. E. Schilling

    H. B. Graham; A. B. Green
  - R. E. Blanco, Problem Leader - RaLa
    - A. H. Kibbey
    - E. M. Shank

    J. E. Farmer
  - D. C. Overholt, Problem Leader - Isolation
    - W. E. Tomlin

    J. M. Delozier; R. B. Quincy
  - J. A. McLaren, Problem Leader - Electrochemistry
    - J. H. Goode
    - H. L. Peeler
  - D. E. Ferguson - Ion Exchange — R. C. Lovelace
  - A. T. Gresky - "25" Process
  - I. R. Higgins - HR Processing — W. E. Shockley
  - L. E. Morse - Fuel Slurries
  - T. C. Runion - Blanket Slurries, Metal Recovery — J. L. Bamberg; V. L. Fowler; C. F. Keck
  - J. O. Blomeke - Blanket Studies
    - C. P. Johnston
- F. L. Culler,(2) Section Chief - Process Design — Lucille Kuykendall, Secretary
  - F. L. Culler,(2) Problem Leader - Idaho Chemical Plant
    - F. N. Browder
    - W. L. Carter(3)
    - P. J. Falivene(4)
    - H. E. Goeller

    Frances Bray, Secretary; Sarah Hudgens, Typist; May Pepper, Secretary; H. E. Scarlett, Clerk

(1) Du Pont personnel.
(2) Dual capacity.
(3) On loan from Engineering Department.
(4) On loan from Foster Wheeler Corporation.

[redacted]

W. J. Greter[5]
J. H. Hinman[4]
J. M. Holmes[4]
J. S. Irwin[4]
William Jensen[4]
G. W. T. Kearsley[3]
W. J. Klaasen[4]
R. J. Klotzbach
W. Mack[3]
A. D. Mackintosh
Charles Maratos[4]
R. P. Milford
E. L. Nicholson
P. L. Robertson[3]
A. M. Rom
J. B. Ruch
D. H. Stewart
T. H. Stickley[6]
W. G. Stockdale
A. J. Sulzback[4]
W. Tinberger[4]
H. O. Weeren[3]
L. W. Zahnstecher[4]

Draftsmen

Leonardo Camposano[4]
F. A. Cottone[4]
G. Doyle[4]
R. G. Gordon[4]
John J. Hall[4]
J. S. Logan[4]
Lee MacAlpine[4]
E. J. Meyer[4]
J. M. O'Keefe[4]
F. L. Peishel[4]
Paul Peyser[4]
Salvatore Piraino[4]
William Richman[4]
Edmund J. Scholz[4]
E. P. Stolarski[4]
Bernard Schwieger[4]
C. M. Thompkins[4]
W. J. Veltung[4]
W. T. Watson[4]

W. E. Unger, Problem Leader - RaLa

B. F. Bottenfield[3]
R. H. Vaughan
E. Wischhusen[3]

G. B. Berry[3]
R. V. Foltz[3]

F. C. McCullough - Cost Analysis

N. J. Rigstad - Idaho Chemical Plant, Operations Planning

J. O. Davis, Section Chief - Unit Operations

Ruth Pennington, Secretary

A. C. Jealous[7] - Solvent Extraction

C. V. Ellison
A. N. Parkes[1]

Technicians

G. B. Dinsmore
H. F. Soard

T. A. Arehart[8] - Special Equipment

R. W. Hinterleiter[1]
F. Mills
G. A. West

T. D. Napier
R. O. Payne

C. D. Watson - Radioactive Waste

M. R. Bennett
R. R. Hood[1]
J. C. Suddath

G. R. Guinn
F. L. Rogers

E. O. Nurmi[9] - Metal Dissolution

L. G. Anderson[1]
D. L. Foster
E. M. Sampson[1]

G. Jones
D. B. Masters
J. C. Rose

H. K. Jackson,[2] Section Chief - Pilot Plant

Agnes Hair, Secretary
R. B. Waters, Draftsman

H. K. Jackson,[2] Problem Leader - Purex

F. E. Harrington - Bldg. 205 Conversion

D. O. Darby - Chemistry

(5) On loan from Instrument Department.

(6) On loan from AEC, Idaho Operations Office.

(7) Responsible in this Section for Metal Recovery and Purex.

(8) Responsible in this Section for RaLa.

(9) Responsible in this Section for "25" Process.

J. W. Landry - Engineering

R. B. Lindauer - Engineering

J. W. Ullman - Data Analysis

W. H. Lewis - Bldg. 706-HB Operations

G. S. Parker

G. S. Sadowski - Bldg. 205 Operations

M. J. Connair(1)
C. B. Hill(1)
C. D. Hylton
T. H. Spencer(1)
W. B. Watkins(1)
R. H. Winget
H. P. Wood(1)

E. C. Stewart, Problem Leader - Metal Recovery

"A" Operators

T. R. McLellan
H. L. Sexton
W. E. Ledbetter
E. E. Shields

Operators

R. F. Benson
C. W. Boatman
W. T. Bostic
E. W. Brown
H. S. Caldwell
G. D. Davis
J. H. Groover
W. Jennings, Jr.
C. H. Jones
J. F. Land
J. F. Lockmiller
R. E. Purkey
R. J. Shannon
W. A. Shannon
R. C. Shipwash
D. E. Spangler
B. J. Strader
D. H. Summers
H. C. Thompson
C. H. Tipton
C. E. Waddell
J. T. Wiggins

AMERICAN CYANAMID COMPANY REPRESENTATIVE

D. G. Reid, IDO Plant Superintendent

Phyllis Groover, Secretary (ORNL)

BECHTEL CORPORATION REPRESENTATIVES

- J. C. Byrne, Project Manager
  - Robert Digges, Assistant Project Manager
  - J. A. Richardson, Project Engineer
    - R. K. Phillips, Manager of Purchases
      - T. Sullivan
    - J. W. Kuhns, Materials Control
      - D. J. Johnston
      - A. A. Ross
    - L. T. McCarthy, Expediter
      - E. C. Herley
  - H. E. Weber, Project Coordinator

Virginia Malone, Secretary

Stenographic Staff

Bettye Burns
Juliet Gillock
Bettye Large
Martha Milligan
Linda Slusher

} ORNL

DU PONT COMPANY REPRESENTATIVE

L. C. Peery, Liaison Office Manager

Cathleen Foster, Secretary

IDAHO OPERATIONS, A.E.C., REPRESENTATIVE

H. A. Ohlgren, Liaison Officer

Blanche Reed, Secretary (ORNL)

ABSTRACT

The progress and status of the chemical technology development are reported for the following problems: TBP Metal Recovery Process, Purex Process, Slurex Process, RaLa Process, Idaho Chemical Processing Plant design, volatility study, radiochemical waste treatment, electrolytic dissolution study, homogeneous nuclear reactor chemistry, plutonium isolation, engineering equipment development and testing, and decontamination of stainless steel by electrostripping.

INTRODUCTION

The major development problems in the Chemical Technology Division were the Purex Process development, the design of the Idaho Chemical Processing Plant, homogeneous reactor fuel studies, and MTR-RaLa Process for the separation of barium from MTR fuel units. The construction of the Metal Recovery Plant, Building 3505, was continued, and a request was initiated for the construction of a building for processing materials with high alpha activity.

In the Laboratory Section the Purex Process studies continued to be the major program. The emphasis on the homogeneous reactor chemistry studies was increased, with work in progress on the preparation of uranium and thorium fuel slurries and on an ion-exchange procedure for processing a uranyl sulfate fuel. The MTR RaLa process study was continued, with attempts to establish the optimum procedure for the extraction of barium from the MTR fuel unit. The electrochemical dissolution studies of uranium and uranium-aluminum alloy were continued. The adsorption of plutonium from uranium hexafluoride was studied to determine the mechanism of the reaction. At the request of the New York Office of AEC, the laboratory section has assisted in the development of a slurry type process involving TBP as a solvent for recovering uranium from ores.

The Unit Operations program was continued on metal dissolving which was applicable to both the Idaho and the Savannah River processes. Other studies were continued on electrostripping for vessel decontamination and radiation stability of surface coatings and plastic materials. Studies were completed on a Lapp pump, steam traps, Swagelock fittings, vacuum relief valves for steam lines, and a lead-shot tranfer jet.

The Pilot Plants Section initiated the demonstration of the Purex Process in packed columns. The installation of the pulse columns was completed, and work was still in progress on the metal dissolver. The installation of the equipment in the Metal Recovery Plant was started.

The Design Section continued the design of the Idaho Chemical Processing Plant as its major effort. Personnel from the Engineering Department and the

Foster Wheeler Corporation continued to cooperate in the ORNL phase of this work. The design of the ORNL RaLa plant modifications was continued, and this is scheduled for completion during the next quarter. A cost study is in progress of the factors entering into radiochemical process plants construction.

During this quarter, the identification system for the buildings at ORNL was changed. The buildings occupied by the Chemical Technology Division are identified as follows:

	OLD NO.	NEW NO.
Director's Office	706-A	3550
Design Section	703-A Annex	2067
Laboratory Section	706-A	3550
Unit Operations Section Office	706-HD	3502
Laboratory	706-HB	3503
Pilot Plant Section	205	3019
Metal Recovery Plant		3505

SUMMARY

TBP METAL RECOVERY PROCESS

1. Soluble silica must be reduced to 0.15 mg of Si per milliliter in the metal feed to prevent silica precipitation in the IA extraction column. The silica precipitation caused difficulty in the IA column phase separation.

2. Adequate recovery of the plutonium with uranium from the ORNL metal waste and subsequent partition of the plutonium from uranium using fluoride ion as the partitioning agent was demonstrated in 1½-in.-diameter packed columns.

3. Corrosion tests indicated a reasonable equipment life for the plutonium fluoride product evaporator when 2 moles of aluminum per mole of fluroide ion was added to decrease the corrosion effect of the fluoride ion.

4. It was necessary to modify the ORNL Metal Recovery Facilities to provide equipment for separating plutonium from irradiated uranium metal. The metal recovery program will be delayed about six months because of this new responsibility.

SLUREX PROCESS

1. The Slurex Process involves extraction of nitric acid slurries of uranium ore with 30% TBP, scrubbing with 0.1 volume of hot water (about 80°C), and stripping of the uranium with equal volumes of hot water.

2. ORNL participation has involved:

   (*a*) Studies leading to solvent selection.

   (*b*) Assistance to Mallinckrodt Chemical Works in the Pilot Plant demonstration.

   (*c*) Establishing the distribution of impurities (i.e., rare earths, molybdenum, and corrosion products) to assure required product purity.

   (*d*) Providing uranium and nitric acid equilibrium data for directing pilot plant runs.

PUREX PROCESS

1. A single partition cycle, with fluoride ion as the partitioning agent for separation of plutonium from uranium, was not successful in obtaining the required uranium purity. As a result, the work on the Purex Flowsheet No. 2 was dropped.

2. The Purex Process operability on a scale of 50 kg of uranium per day was demonstrated to be satisfactory with cold feeds in the pilot plant packed columns. The uranium loss for one solvent extraction cycle was 0.06%.

3. The nonoxidizable gas volume resulting from nitric acid dissolution of uranium metal was determined to be 3 cc per gram of uranium metal.

4. The oxidation and/or reduction of the metal solution prior to the first cycle was not necessary for satisfactory plutonium recovery and had no significant effect on decontamination.

5. Increasing the metal solution feed acidity in laboratory column tests under IA conditions did not significantly improve the ruthenium decontamination as had been indicated by batch equilibrium data.

6. The gross beta decontamination factor under Purex Flowsheet No. 1 conditions in a laboratory column test was increased from 700 to 3500 by increasing the height of the packed scrub section from 16 to 24 ft.

RaLa PROCESS

1. The solution of MTR fuel units in sodium hydroxide followed by the addition of sulfuric acid was demonstrated in the laboratory to yield satisfactory recovery of the barium.

2. Nitric acid instead of Versene for the barium sulfate precipitate solution was found to be satisfactory for preparation of the feed for the ion-exchange barium purification step. This eliminated *p*H control, which was required by the Versene solution method.

IDAHO CHEMICAL PROCESSING PLANT DESIGN

1. The satisfactory solution of uranium-aluminum alloy metal slugs was demonstrated on an eight-slug scale.

2. The gases evolved during the uranium-aluminum alloy solution contain a high percentage of nonoxidizable gases, and therefore the use of oxidative absorption of the NO and NO_2 is not so attractive as in the solution of uranium metal.

HOMOGENEOUS REACTOR CHEMISTRY

1. Uranium trioxide—bentonite slurry suspensions were stable under reactor temperature and pressure conditions for 330 to 562 hr. If radiation does not affect this result, this slurry would be useful as a homogeneous reactor fuel.

2. Thorium oxide—bentonite slurry suspensions were stable under reactor temperature and pressure conditions for 450 hr.

3. Dowex 50 cation-exchange resin has indicated sufficient radiation stability so that it can be used for the extraction of plutonium and fission products from a uranyl sulfate solution fuel.

1. TBP METAL RECOVERY PROCESS

The early development studies of the TBP metal recovery process were concerned primarily with the recovery of the uranium only from the Hanford metal waste. However, at ORNL there was sufficient plutonium associated with the metal waste to make the recovery of the plutonium along with the uranium attractive. Therefore the ORNL Metal Recovery Plant was designed with a three-column first cycle that would be capable of recovering both uranium and plutonium if this proved to be feasible. During the past quarter laboratory studies were continued which demonstrated the optimum conditions for the recovery of plutonium from the ORNL metal waste. No major changes have been made in the process flowsheet presented in ORNL-936, Fig. 1.1.

Feed Preparation. Tests in laboratory columns demonstrated that the soluble silica in the metal solution feed must be reduced to about 0.15 g of silica per 100 g of uranium. As the extraction of the uranium proceeded, silica precipitated from the solution, creating phase separation difficulties in the packed extraction column. To precipitate and remove the silica from the metal waste solution, it was necessary to digest the solution after acidification at 95 to 100°C for 3 hr before it was removed by filtration through Celite 454 filter aid.

Column Study of the Uranium-Plutonium Flowsheet. The TBP Metal Recovery Flowsheet for the recovery of uranium and plutonium from the ORNL metal waste was satisfactorily demonstrated in a 1-in. packed column. In the extraction column, uranium and plutonium losses of less than 0.1 and 0.5%, respectively, were demonstrated with a 17-ft extraction section. In the partitioning column a 0.005 *M* HF solution, one-tenth the volume of the organic stream, reduced the alpha activity in the uranium to 5 counts/min per milligram of uranium in 12 ft of partitioning section. In the strip column, the uranium loss was less than 0.01%, using a volume of water equal to the solvent volume in 10 ft of column. There is some indication that by increasing the temperature of the water strip from room temperature to 75°C the volume of water required for stripping the uranium may be reduced by a factor of 3 to 4. For this process a 15% tributyl phosphate solvent was used with Amsco solvent (code 123-15) as the diluent. In these tests the solvent was reused in seven successive cycles with consistent improvement in the solvent mixture as indicated by decreased holdup of uranium, plutonium, and beta activity in the stripped organic phase, thus indicating that little or no solvent treatment will be required.

This study was carried out in 1-in.-diameter glass columns packed with ¼- by ¼-in. stainless steel split rings with parallel runs in countercurrent batch equipment. By comparison of the results, the approximate number of stages and the stage heights required for satisfactory column operation were determined (see Table 1.1).

TABLE 1.1

TBP Metal Recovery Process — Uranium-Plutonium Flowsheet, HETS and Stage Requirements

Column: 1-in.-diameter glass packed with ¼- by ¼-in. stainless steel split rings

	NO. OF STAGES REQUIRED	HETS (ft)
Column A		
Uranium-plutonium extraction	5	3
Fission product scrub	3	4
Column B		
Uranium-plutonium partition	6	2.5
Uranium scrub	3	3
Column C		
Uranium strip	5	2

Plutonium Product Evaporator — Corrosion Study. It is desirable to concentrate the plutonium product stream by evaporation by a factor of 300. The use of fluoride ion as the partitioning agent makes this possible. By the addition of aluminum nitrate, the corrosive effect of the fluoride ion on stainless steel was significantly reduced. However, at least 2 moles of aluminum per mole of fluoride was necessary to reduce the corrosion to an acceptable value of 30 mils per year for stainless steel types 309 and 329. The corrosion rate for stainless steel types 304, 316, and 347 was 150 mils per year.

Under these conditions it will be possible to evaporate the plutonium fluoride product solution in a stainless steel evaporator for the TBP Metal Recovery Process; however, this was not recommended for a similar application

in the Purex Process (see Section 5.4). Other methods of concentration of the plutonium fluoride solution are to be investigated.

ORNL Metal Recovery Plant — Construction. The ORNL Metal Recovery Plant was originally designed to recover the uranium from the metal waste solutions. This metal waste has been accumulated as the result of chemical process development studies at the Laboratory since its initial operation. Recently the Laboratory has been requested to process the irradiated normal uranium to recover the uranium, plutonium, and Sr^{90}. Therefore it has been necessary to modify the original plant design to include metal-dissolving equipment that was not required for the original plant purpose.

Approximately 15% of the process equipment installation has now been completed. A complete discussion of the equipment to be installed in the plant has been reported in the *Pilot Plant Report for November, 1950 - January, 1951* (ORNL 962).

2. SLUREX PROCESS FOR FEED MATERIALS PRODUCTION CENTER

Following a decision by the New York AEC Office to expand the present facilities for the refining of uranium from ore feed stocks, American Cyanamid Company was retained to survey the field of high-grade-ore processing. It was felt desirable by the New York AEC Office to investigate processes alternate to the process now in use by the Mallinckrodt Chemical Works in St. Louis in order that some of its undesirable features might be eliminated. In view of their considerable experience with solvent extraction, ORNL was requested to make an evaluation of various solvents as alternates for diethyl ether now used by Mallinckrodt.

Using a plant feed from Mallinckrodt consisting of a filtered nitric acid solution of pitchblende and magnesium uranates, laboratory-scale runs were carried out to evaluate uranium recovery using diethyl ether, TBP, methyl isobutyl ketone, and pentaether. Of these solvents, only TBP showed sufficient promise to merit further investigation as a solvent alternate for diethyl ether. These results are reported in detail in ORNL-874.

The one major question remaining involved the mechanical operability of TBP in the jet mixer type of contactors utilized in the Mallinckrodt plant. Consequently, ORNL assisted in the evaluation of TBP as a solvent in jet mixing columns in the Mallinckrodt Chemical Works pilot plant. In these runs throughputs were extended to greater than 1500 gal/hr per square foot with no evidence of flooding or emulsions. These data are reported in ORNL-890.

The above results were sufficiently conclusive to warrant further pilot plant scale testing with the TBP process, and a new pilot plant for this purpose was constructed at the Mallinckrodt Chemical Works in St. Louis. ORNL was requested to continue laboratory studies in conjunction with the pilot plant and to provide data on the distribution coefficients of rare earths, molybdenum, vanadium, and TBP. These data can be briefly summarized as follows: The extraction of rare earths from solution by diethyl ether was shown, by using tracers, to be lower by factors of 100 to 1000 than the extraction by TBP (with which distribution coefficients were 0.05 to 0.3). However, in the presence of uranium the degree of extraction of rare earths by the two solvents was comparable. The rare earths extracted by TBP are almost completely removed by two half-volume scrubs with 1 *M* nitric acid. The distribution

coefficients are essentially constant throughout successive extraction and scrub stages. The extraction of molybdenum by TBP is acid dependent with a maximum distribution coefficient of about 0.1 in the range of 1 to 3 *M* nitric acid. Scrubbing with 1 *M* nitric acid, although adequate for rare earth removal, was not satisfactory for removal of molybdenum.

Uranium and nitric acid equilibrium data for the pilot plant runs at St. Louis were obtained in laboratory countercurrent batch runs at ORNL using aliquots of the pilot plant feed and solvent streams. The following observations and conclusions were reached during the course of these experiments:

1. Uranium losses of less than 0.01% are feasible in four theoretical stages for 5 *M* nitric acid feeds of magnesium uranates, pitchblende, Canadian black oxide, and various mixtures of these feeds. For the runs in which solutions were added to the system without filtration (i.e., hot pitchblende slurries), the total solids per milliliter after four stages of extraction contained less than 0.01 mg of uranium.

2. The solvent mixtures recycled from previous runs must be stripped to approximately 0.1 mg of uranium per milliliter before reuse. Otherwise, this uranium will be stripped by the raffinate in the lower part of the column to yield apparently high losses.

3. The formation of emulsions and phase disengagement times are only slightly affected by the total amount of solids present in the aqueous phase. However, the presence of soluble silica is very conducive to the formation of stable emulsions and silica should be made insouble (dehydrated). This was accomplished in the laboratory by heating the feeds at 95 to 100°C for approximately 3 hr.

4. For the feeds of 3 to 5 *M* acid concentrations a good "rule of thumb" for solvent-to-feed flow ratios (to yield 80 to 85% uranium saturation) is 1 volume of solvent for each 100 g of uranium per liter in the feed.

As a result of the combined studies of ORNL, Mallinckrodt Chemical Works, New Brunswick AEC Laboratory, and the Kellex Corporation, a process flowsheet has been prepared by the Catalytic Construction Company and entitled "The Slurex Process"; the process is so called because some sources of feed materials will be applied to the extraction columns as nitric acid slurries without prior filtration. The essential features are extraction with 30% TBP from 3 to 5 *M* nitric acid feeds to yield about 80% saturation in the solvent at the feed plate. The solvent extract is scrubbed with a 0.1 volume of hot water. The scrub is also carried out hot (approximately 80°C) with equal volumes of water.

3. PUREX PROCESS

The major objective of the Purex Process is its use in the separation of uranium, plutonium, and fission products from the Savannah River reactor irradiated normal uranium. The laboratory work has been based on two general flowsheets: (1) Uranium and plutonium are separated after one cycle of decontamination and each is passed through a second decontamination cycle, and (2) the plutonium and uranium pass through two decontamination cycles before being separated. At the present time Flowsheet No. 1 is favored because of the more complete separation of the plutonium from the uranium. The conditions for the solvent extraction cycle have been fairly well established. The remaining major problems are those concerned with, first, the collection and storage of the radioactive gases from the dissolver, and, second, the reduction in volume of the radiochemical waste created by the process.

Gas Evolution from Aluminum Jacket Dissolution. The caustic dissolution procedure for the removal of the aluminum jacket from the uranium slug has been tentatively selected. In the reaction of sodium hydroxide with aluminum, hydrogen gas is evolved. This gas is undesirable because it may combine explosively with any oxygen in the system. The addition of sodium nitrate to act as an oxidizing agent leads to the evolution of ammonia gas rather than hydrogen. A test made with 2S aluminum and 1.5 moles of sodium hydroxide and 0.5 mole of sodium nitrate per mole of aluminum, indicated that the water-insoluble gases would amount to about 0.04 mole of gas per mole of aluminum. This sodium-to-aluminum ratio was kept to a minimum to prevent precipitation of the aluminum from the coating removal solution. From the chemical reaction it would be expected that approximately 0.375 mole of ammonia would be evolved per mole of aluminum. Further laboratory work will be carried on to determine more completely the composition of the gas evolved.

A brief study of the aluminum dissolution in nitric acid with mercury catalyst indicated that about 0.5 mole of gas per mole of aluminum was evolved, with the chemically inert gas accounting for 7 to 10% of the total gas volume. In this test a nitric acid—to—aluminum ratio of 4.0 was used with 5% mercuric nitrate as the catalyst, based on the weight of aluminum.

Gas Evolution from Uranium Dissolution. Laboratory studies were initiated to determine the composition of the gases evolved when the uranium was

reacted with an excess of nitric acid to yield a final solution containing 350 g of uranium per liter. The chemical reaction is expressed in the following equation:

$$U + 5.2\,HNO_3 \longrightarrow UO_2(NO_3)_2 + 2NO\uparrow + 2H_2O + 1.2HNO_3$$

In the laboratory experiment, the total volume of gases evolved was 355 ml per gram of uranium. This value corresponds to an NO-to-uranium mole ratio of 1.6 rather than the theoretical 2.0 indicated by the above equation, with the deviation probably due to the reaction of NO with HNO_3 to form higher oxides. It was also found that 1.5 volumes of oxygen was required to oxidize 2 volumes of NO; the product was then dissolved in water to yield nitric acid. This was consistent with the following equation:

$$2NO + 1.5\,O_2 + H_2O \longrightarrow 2HNO_3$$

In these experiments, steam sparging of the reactor and condenser prior to acid addition was utilized to remove atmospheric air.

Under these dissolving conditions the volume of nonoxidizable gases was determined to be 3 ml per gram of uranium. Therefore the volume of these gases was approximately 2% of the total volume of gases. The composition of the nonoxidizable gases was 84% N_2, 1.5% N_2O, 11.5% CO_2, and 2.5% CO. The carbon oxides were probably due to metal impurity. The nonoxidizable gas volume was determined by scrubbing the off-gas solution with a 20-to-1 mixture of 96% sulfuric acid—92% nitric acid dehydrated with anhydrous sodium sulfate. This procedure removed the nitric oxide and dioxide from the system, leaving nitrogen, nitrous oxide, and the other nonoxidizable gases.

Removal of Radioactive Gases from Dissolver Off-Gas. There are four major phases to the gas train required for the removal of the radioactive gases — iodine, xenon, and krypton — from the dissolver off-gas. These include (1) removal of radioactive iodine, (2) removal of nitric oxides, (3) removal of oxygen, and (4) removal of the radioactive noble gases, xenon and krypton.

The iodine removal unit, the first unit in the gas train, would probably consist of a silver reactor similar to that now in operation at Hanford. The

second unit would be the oxidation cell where, by the addition of oxygen, the NO would be oxidized to NO_2 and scrubbed out with water to yield a weak solution of nitric acid which could be later used for another dissolving. To hold the oxygen in the gases discharged from this unit to a minimum, the gases would be held in this unit until the dissolving was complete. Thus, only a stoichiometric amount of oxygen would be involved and there would be little or no opportunity for oxygen bleed-through to the rest of the system. The third major unit is to be a hot copper or hot iron bed over which the gases pass to reduce N_2O and remove excess free oxygen from the system. Gases that go into the fourth phase are primarily nitrogen, xenon, and krypton. It is planned to use low-temperature adsorption on either activated carbon or silica gel for the removal of xenon and krypton from the nitrogen.

The development program at ORNL concerns the demonstration of the oxidation chamber and the hot metal bed for oxygen removal. The iodine removal unit is now in operation at Hanford, whereas the Linde Division of Union Carbide and Carbon has the responsibility for the development of the xenon-krypton adsorption unit. Before the development program is completed, the dissolver with its complete gas train will be demonstrated on a pilot plant scale at ORNL.

Feed Pretreatment Study. Originally it was thought that to ensure adequate plutonium recovery it would be necessary first to reduce the plutonium in the metal solution with ferrous sulfate from the VI to the III state and then to oxidize with sodium nitrite from the III to the IV state. However, it was demonstrated in column tests that with the expected plutonium(VI) concentration in the metal solution, the loss would be significant. Therefore ferrous sulfate reduction was not required. Further column tests during this past quarter have indicated that the oxidation of plutonium(III) to plutonium(IV) by sodium nitrite may also be unnecessary; however, this phase of the work is continuing.

Increased decontamination is a second incentive for feed pretreatment. However, feed treatment for this purpose is probably not important because the Flowsheet No. 1 should yield adequate separation of uranium and plutonium from fission products. With the Purex Process this study has been limited to procedures that could be carried out in the present proposed dissolver and feed storage tanks. Ruthenium is again the major fission product of concern, and,

in preliminary tests, the addition of such reagents as fluoride, phosphate, and urea have not been effective. The effect of the dissolving procedure on ruthenium is to be studied.

Effect of Acid Concentration on Ruthenium Decontamination. Equilibrium studies, previously reported,* had indicated that by increasing the acidity in the first extraction stage, the extractability of ruthenium could be significantly reduced. However, the ruthenium decontamination factor was increased from 120 to only 140, which was not significant in batch countercurrent tests under Column IA conditions, using six extraction and six scrub stages when the acid concentration of the feed and scrub, respectively, was increased from 2 and 3 *M* to 3.5 and 4.5 *M*. In addition, the zirconium decontamination factor was decreased from 9000 to 135. It was concluded that the high-acid flowsheet had no advantage.

By the addition of 0.002 *M* hydrofluoric acid to the scrub, under high acid conditions, zirconium decontamination was increased to 24,000. The fluoride was not desirable because of corrosion. These changes in flowsheet conditions had little or no effect on the uranium and plutonium losses.

Effect of Scrub Height on Column IA Decontamination. Increasing the height of the scrub column from 16 to 24 ft increased the gross beta decontamination factor from 700 to 5300. This confirms results previously obtained in laboratory batch countercurrent runs which indicated that as many as six scrub stages are required to scrub the zirconium and columbium effectively from the organic stream. These runs were carried out in 1½-in.-diameter stainless steel columns packed with ¼- by ¼-in. split rings. The feed for the runs was prepared by dissolving a mixture of slugs to a 100% heel followed by adjustment of the acidity and oxidation with sodium nitrite.

Fluoride as a Uranium-Plutonium Partitioning Agent. In Flowsheet No. 2 it was necessary to reduce the plutonium concentration in the uranium product to 1 part of plutonium per 10^8 parts of uranium or 0.7 Pu counts/min per milligram of uranium. In laboratory studies it was found that the fluoride ion was the most efficient agent tested for separation of the plutonium from uranium under partition solvent extraction conditions. However, the batch and column studies have indicated that the plutonium concentration in the uranium product was reduced to only 13 Pu counts/min per milligram of uranium after partitioning with 0.03 *M* NaF. This test was carried out in a 1½-in.-diameter

* ORNL-846.

column packed with ¼- by ¼-in. stainless steel rings. The packed heights of the partitioning and stripping sections were 27 and 9 ft, respectively.

It was concluded that by the use of fluoride ion as the partitioning agent, one solvent-extraction partitioning cycle was not sufficient to reduce the plutonium to its specified concentration in the uranium, and that additional separation of the plutonium from uranium would be required if Flowsheet No. 2 was used.

Column Tests of the Plutonium Second Cycle. The plutonium second cycle of Flowsheet No. 1 when tested in the laboratory column gave a plutonium loss of 0.15% and an HETS of 2 ft with the column operating at 30% of flooding. The extraction loss, 0.04%, was satisfactorily low. However, the strip loss, 0.11%, was high owing to insufficient length of stripping column.

An IBP solution from a previous first-cycle run, scrubbed with hydrocarbon diluent to remove the tributyl phosphate, was used as the feed. The solution was not evaporated because of its small volume; but, nitric acid was added to reach 4.5 *M* nitric acid and the solution was oxidized by the addition of 0.1 *M* sodium nitrite.

This test was made in the 1-in.-diameter glass laboratory columns which were packed with ¼- by ¼-in. split stainless steel rings. Packed height of the extraction, scrub, and strip sections were 14, 4, and 14 ft, respectively. The solvent used was 10% tributyl phosphate—90% Amsco 123-15. The flow ratio of feed to solvent was 3 to 2.

Nitric Acid Recovery. The major incentives for the recovery of nitric acid from the Purex solvent extraction waste were, first, the reduction of the volume of the waste that must be stored, and, second, the reduction of the amount of inactive cation which must be added to neutralize the solution prior to storage. In earlier studies it had been shown that (1) the nitric acid waste could be evaporated to dryness without an explosion hazard created due to the presence of organic decomposition products and (2) the major volatile fission product was ruthenium which distilled along with the nitric acid when the nitric acid concentration in the evaporator was about 9 to 10 *M*, and the HETS in the nitric acid rectification column had been determined. A nitric acid evaporator and rectification column has now been installed in the pilot plant and is undergoing preliminary tests.

A laboratory test simulating the pilot plant evaporator operation at one-half atmospheric pressure with a simulated IAW feed to the evaporator demonstrated a recovery of 71% of the nitric acid with a gross decontamination factor of 4×10^3. The feed for this run contained 1.6 *M* nitric acid and 6.1×10^6 β counts/min per milliliter. A study is now in progress to determine the volatility of the ruthenium as a function of the nitric acid concentration.

In previous work, it had been found that the volatile ruthenium tetroxide was readily plated on metal and organic surfaces. In a laboratory evaporator, using a glass ring packing in the entrainment trap, a decontamination factor of the order of 10^3 was obtained for ruthenium. When this was replaced by clean stainless steel or graphite rings, a decontamination factor of the same order was obtained. However, stainless steel rings coated with a thin film of oil gave a decontamination factor of the order of 10^5, which was of the same order as the decontamination factor obtained when Tygon packing was used. With the Tygon packing, however, chemical reaction occurred when the acid concentration in the vapors reached about 3 *M*. While the presence of organic surfaces evidently removed the ruthenium from the vapor, this method was not recommended for further study because of the reaction of nitric acid with the organic materials.

Pilot Plant Packed-Column Test of Flowsheet No. 2. The operation of the Purex Flowsheet No. 2 in the pilot plant packed solvent extraction column was studied to determine uranium losses, flooding rates, effect of solvent diluent in the strip column, and the effect of short shutdown periods on equilibrium conditions in the column. The feeds for this study were prepared by the dissolution of uranyl nitrate hexahydrate salt and did not contain either plutonium or fission products. In addition, construction work was continued on installing pulse columns in parallel with the packed columns for comparative study of the metal dissolver, the acid recovery equipment, and the plutonium product evaporator.

Satisfactorily low uranium losses were demonstrated under A, B, and C column conditions, approximately 0.1% per cycle. In the initial run, under both first- and second-cycle conditions, using Flowsheet No. 2, the uranium losses in the C column were unexpectedly high, 20% for the first cycle and 7% for the second cycle (see Tables 3.1 and 3.2). When a 0.02 *M* nitric acid solution was used instead of water for stripping, this loss was increased (see Run IC-2). However, by increasing the flow rate from 37.5 to 50 kg of uranium

TABLE 3.1

Purex Process - Flowsheet No. 2 - First Cycle (Cold ORNL Pilot Plant Packed-Column Runs)

ORNL Pilot Plant Packed-Column Runs, Second Cycle - Cold

Feeds:	IAF	1.35 *M* U, 2.0 *M* HNO_3, 100 volumes
	IAS	3 *M* HNO_3, 67 volumes
	IAX	30% TBP, 70% Amsco 123-15, 333 volumes
	ICX*	Water
	ICS**	30% TBP, 70% Amsco 123-15, 89 volumes
Columns:	IA	Extraction - 3 in. diameter, 19 ft height
		Scrub - 3 in. diameter, 21 ft height
	IC	Strip - 4 in. diameter, 22 ft height
Packing:		¼-in. diameter by 3/8-in.-long stainless steel split rings

RUN NO.	U THROUGHPUT (kg/day)	TOTAL FLOW RATE (gal/hr/sq ft)			RUN DURATION (hr)	U LOSS (%)	
		IA EXTRACTION	IA SCRUB	IC STRIP		IAW	ICW
IC-1	37.5	125	100	160	72	0.0018	21.4
IC-2*					81	0.025	27.3
IC-3	50	165	135	215	41	0.035	20.6
IC-4**				200	46	0.57***	14.8

*0.02 *M* HNO_3 used for ICX in run K-2.

**Diluent (ICS) for IAF not added in run IC-4.

***High loss due to failure of interface controller.

TABLE 3.2

Purex Process - Flowsheet No. 2 - Second Cycle (Cold ORNL Pilot Plant Packed-Column Runs)

ORNL Pilot Plant Packed-Column Runs, Second Cycle - Cold

Feeds:	IIAF	1.35 *M* U, 2 *M* HNO_3, 0.02 *M* $NaNO_2$, 100 volumes
	IIAS	3 *M* HNO_3, 67 volumes
	IIAX	30% TBP, 70% Amsco 123-15, 333 volumes
	IIBX	30% TBP, 70% Amsco 123-15, 89 volumes
	IIBS	0.02 *M* NaF, 0.6 *M* HNO_3, 89 volumes
	IICX*	Water, 665 volumes
Columns:	IIA	Extraction - 2 in. diameter, 17 ft height
		Scrub - 2 in. diameter, 21 ft height
	IIB	Extraction - 3 in. diameter, 28 ft height
		Scrub - 3 in. diameter, 13 ft height
	IIC**	Strip - 4 in. diameter, 22 ft height
Packing:		¼-in.-diameter by 3/8-in.-long stainless steel split rings

RUN NO.	U THROUGHPUT (kg/day)	TOTAL FLOW RATE (gal/hr/sq ft)					RUN DURATION (hr)	U LOSS (%)		
		IIA EXTRACTION	IIA SCRUB	IIB EXTRACTION	IIB SCRUB	IIB STRIP		IIAW	IIBP	IICW
IIC-1	25	185	145	90	30	105	72	0.004	0.002	6.8
IIC-2	37.5	275	220	130	45	160	80	0.014	0.007	10.5
IIC-3	50	365	290	175	60	215	27	IA Column Flooded		
IIC-4*,**	15	110	90	55	18	65	48	0.010	0.018	0.25
IIC-5*,**						80	48	0.007	0.007	0.04
IIC-6*,**						90	24	0.028	0.012	0.055

*CX/BU flow ratio increased from 1.5 (IIC-1 through IIC-4) to 2 (IIC-5), to 3 (IIC-6) by increasing CX flow rate.
**Packed height of strip column (IIC) increased to 36.5 ft.

throughput per day, and eliminating the solvent diluent for the IAP, it was possible to reduce the uranium losses to 14.8%. In the second cycle of runs the uranium loss was only 7 to 10%, with a significant difference between first- and second-cycle strip conditions being the lower acidity in the organic phase entering the feed column in the second cycle, 0.05 *M* as compared to 0.17 *M* (see Run IIC-1 and 2). The uranium loss under strip conditions was reduced to approximately 0.25% by increasing the packed height of the strip column from 22 to 36.5 ft. It was further reduced to 0.04% by increasing the aqeuous-to-organic feed ratio in the strip column from 1.5 to 2.0. Further increase of this flow ratio to 3 had no significant effect. Uranium material balances for previous feed varied from 94 to 110%, while the material balance for nitric acid varied from 98 to 107%.

It was found that the limiting flow conditions for the Purex packed solvent extraction column was the IA scrub section, with the optimum flow in this section approximately 100 gal/hr/sq ft for total throughput of both phases. At a rate of 220 gal/hr/sq ft in the scrub, the tendency to flood was evident by the uneven build-up rate in the IIAW catch tank and a periodic dropping of the interface. However, at 290 gal/hr/sq ft the organic phase was present in the IIAW stream. This limited the capacity of the Purex Process in the second-cycle packed column to approximately 15 kg of uranium per day. The diameter of this column has now been increased to 3 in.

It was demonstrated that the flows through the packed column under Purex conditions could be stopped for a period as long as 4 hr without seriously altering the chemical equilibrium in the column. This factor was of some interest since, if pump failure should occur, it was felt that a 4-hr shutdown would be sufficient to replace any pump in this system.

A more complete report of this study has been issued as ORNL-962.

Displacement Fluid Study. On the basis of satisfactory chemical stability in contact with metal solution and no significant effect on the subsequent solvent extraction of the metal solution, Amsco 123-15 was recommended for use as a displacement fluid. In the ORNL pilot plant the hot metal solution is pumped to the solvent extraction columns by displacing it from the tank with an inert immiscible fluid. Two other organic fluids were found satisfactory, Gulf BT and methylcyclohexane. However, their flash points were not so high

as the flash point for Amsco 123-15, 143°F. A fourth fluid was also investigated, Shell Dispersol, which was a sulfonated solvent. From visual observation, this appeared to be the most stable because no discoloration of the solvent was noted during the aging period, whereas the other solvent gradually assumed a characteristic yellow color. However, in subsequent extraction tests of the metal solution, significant increases in the losses of uranium and plutonium were noted.

The tests were carried out by allowing the solvents to stand in contact with the metal solution (320 mg of uranium per milliliter, 2.0 *M* nitric acid, 4.5×10^5 per counts/min per milliliter, 10^7 β counts/min per milliliter) for seven weeks. At weekly intervals samples of each solvent were analyzed for uranium, plutonium, and β activities. However, no significant amount of activity was found in the solvent. At the end of the storage period, each feed was oxidized with sodium nitrite and processed countercurrently through extraction, scrub, and strip.

4. RaLa PROCESS

At the present time, radioactive barium is extracted from irradiated Hanford uranium in the ORNL RaLa Plant. In order to increase the production of radioactive barium, it is planned to extract the barium from irradiated MTR fuel units in the Idaho Chemical Processing Plant. Three alternate procedures were evaluated in laboratory studies for the initial separation of the barium from the uranium-aluminum alloy of the MTR fuel assembly. In the last quarterly report, ORNL-936, the flowsheets of these alternate procedures were presented, and it was concluded that the sulfuric acid dissolution procedure was the most satisfactory. However, further work indicated that a caustic dissolution followed by the addition of sulfuric acid for the dissolution of the uranium and the precipitation of the barium had several advantages. These included rapid dissolution, less corrosion and gas evolution, and the elimination of mercury contamination (see Fig. 4.1). Laboratory demonstration of this process through the ion-exchange purification cycle has been satisfactory, and the design of a pilot plant for the engineering development of the process is now being considered.

Caustic Dissolution of Uranium-Aluminum Alloy. The cautic dissolution of uranium-aluminum alloy was studied to determine the optimum conditions for minimum hydrogen evolution and complete dissolution. The hydrogen evolution during the dissolution with sodium hydroxide was reduced to a minimum (less than 5 cc per gram of aluminum) when 0.5 mole of sodium nitrate per mole of aluminum was present. Under these conditions the reaction

$$8Al + 5NaOH + 3NaNO_3 + 2H_2O \longrightarrow 3NH_3 + 8NaAlO_2$$

took place, with ammonia instead of hydrogen being evolved. The ammonia may be removed from the dissolver gas by a water scrub. Without the sodium nitrate present, about 1600 cc of hydrogen per gram of aluminum was evolved.

Complete dissolution of the aluminum in the aluminum-uranium alloy required at least 1 mole of sodium hydroxide per mole of aluminum (see Fig. 4.1). The uranium phase of the uranium-aluminum alloy was not dissolved in the sodium hydroxide.

[redacted]

FIG. 4.1 Drawing #10496

TENTATIVE MTR - Ra La FLOWSHEET
Caustic Sulfate Process
Full Scale: 1 MTR Assembly
Over-all Process time < 48 hrs.

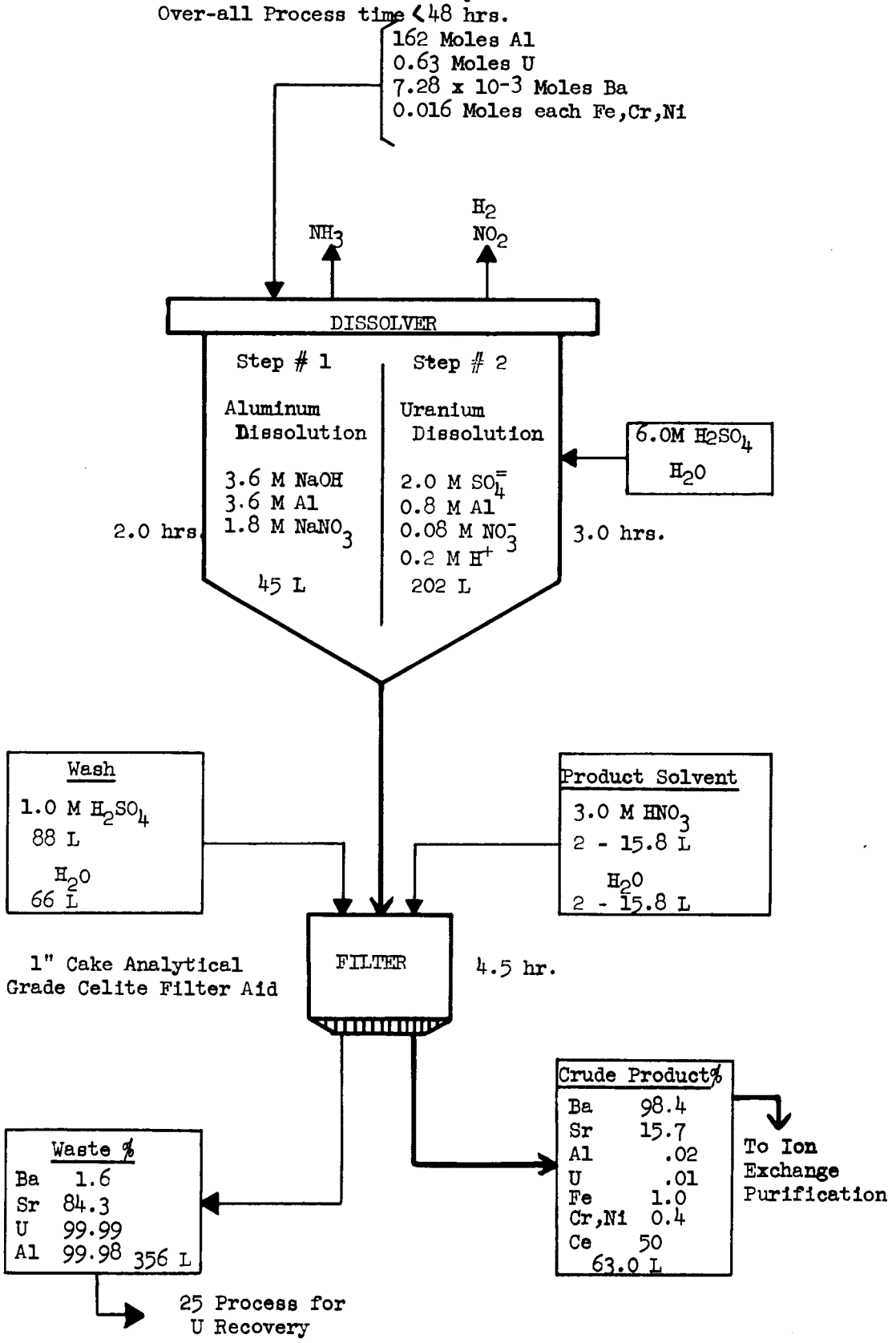

[redacted]

Uranium Dissolution and Barium Precipitation. The undissolved uranium phase was dissolved, and the barium was precipitated by the addition of sulfuric acid. A minimum barium loss of 1.9% was obtained with a final solution condition of 3.5×10^{-5} *M* Ba^{++}, 0.8 *M* Al^{3+}, 0.08 *M* NO_3^-, 0.2 *M* H^+, and 2.0 *M* SO_4^{--} (see Table 4.1 and Fig. 4.1). Increasing the sulfate concentration and decreasing the barium concentration increased the barium loss. The barium loss was also increased by increasing the temperature of the filtration from 25 to 90°C.

Nitric Acid—Dowex 50 Ion-Exchange Procedure for Barium Purification. Nitric acid—Dowex 50 ion-exchange procedure for the final barium purification step was investigated in the laboratory as an alternate to the Versene—Dowex 50 procedure that will be used in the ORNL plant. The advantages of the nitric acid procedure were to eliminate the *p*H determination of the barium solution fed to the column, as well as to eliminate the hydrochloric acid elution of sodium. The tentative procedure involved a Dowex 50 ion-exchange column 6 in. in diameter and 10 in. high to which the nitric acid solution of the barium from the sulfate precipitation was fed. Essentially all the cations in the solution were absorbed on the resins. The aluminum present was eluted with 0.4 *M* oxalic acid. Strontium and barium were both eluted with 1.5 *M* nitric acid, with the possibility of using 6.0 *M* nitric acid for the barium elution if an increase in the rate of elution of the barium was desired. The final product from the barium elution was evaporated to dryness. Major disadvantages of the nitric acid—Dowex 50 system were (1) large solution volume, (2) small separation factor for the barium-strontium separation (2.2 as compared to 10 for the Versene system), and (3) poor separation of cerium from the barium (see Fig. 4.2).

The distribution coefficients for barium, strontium, aluminum, uranium, mercury, and cesium were studied as a function of nitric acid concentration (0.1 to 12 *M* HNO_3) to determine the optimum condition for the purification of the barium in the nitric acid—Dowex 50 system.

The sulfate precipitation should eliminate aluminum, iron, chromium, nickel, and uranium. However, elution agents for these materials were evaluated in the event that they were necessary. Oxalic acid was effective for aluminum and iron, and diethanolglycine was effective for eluting iron. However, elution agents for nickel and chromium have not been found to date.

Fig. 4.2 Drawing #10497

Tentative MTR - Ra La Flowsheet

Purification of Barium by Ion Exchange

Full Scale: 1 MTR Assembly

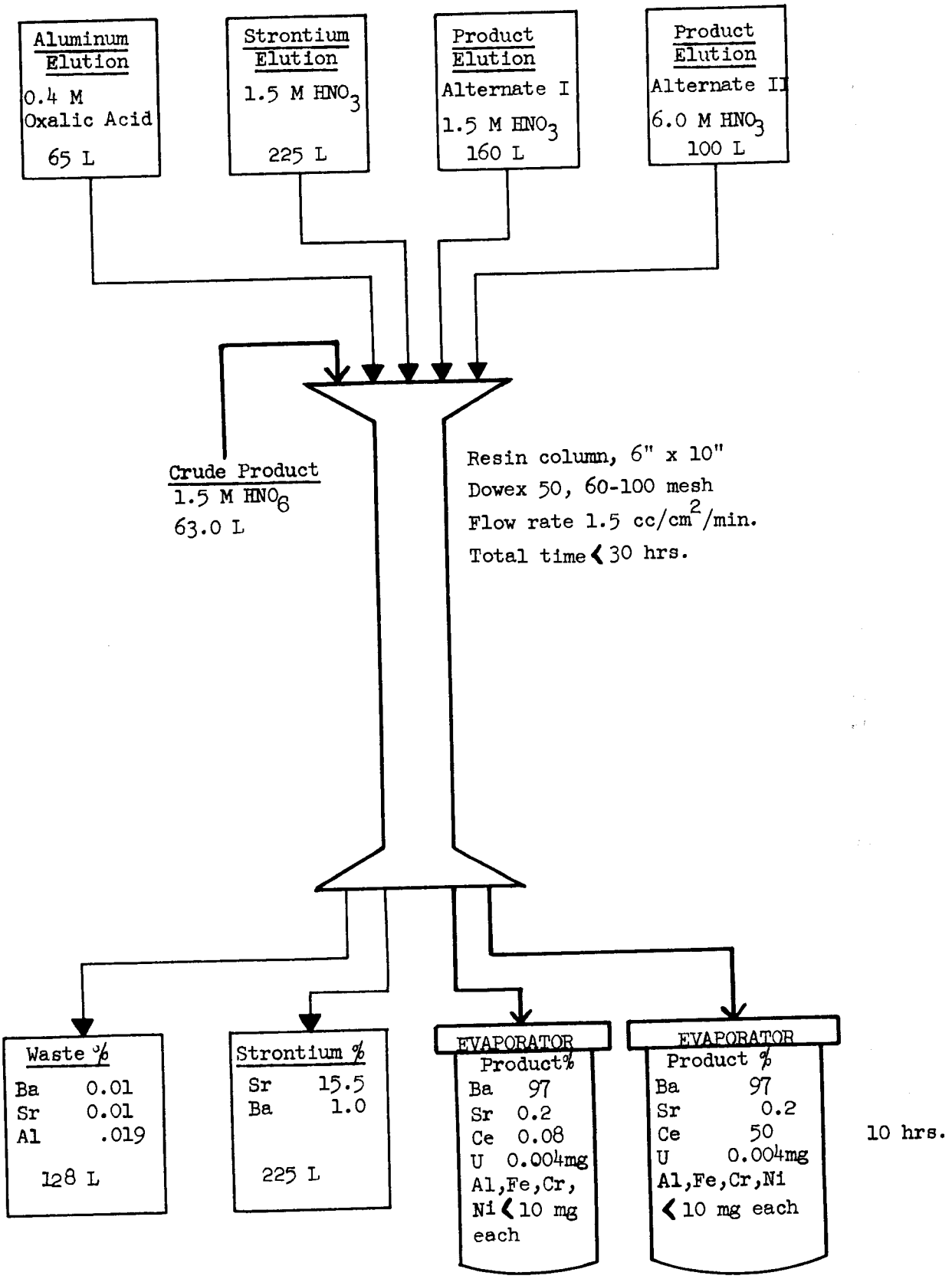

[redacted]

ORNL RaLa Plant Modification. The RaLa Process will be continued at ORNL until it is transferred to the Idaho Plant in early 1953. It was necessary to modify the ORNL plant for the interim period to increase production. During this period, development work was carried out to increase the filtration capacity of the plant, and the alterations of the plant filtration equipment were completed. In addition, the installation of the ion-exchange cubicle for the final product purification was continued. The completion of the cubicle is dependent on the receipt of several tantalum-lined units.

A study of the filtration problem in the laboratory showed that a significant amount of silica passed through the metal solution crud filter into the sulfate precipitation step and that this silica was the major cause of the low filtration rate of the sulfate precipitation. It was demonstrated that a 1 *M* nitric acid wash following jacket removal was effective in removing the residual silica bonding agent from the slug.

The plant crud filter was a G porosity sintered stainless steel 347. In order to increase its effectiveness for silica removal, it was demonstrated that a 1-in. precoat of 545 Celite filter aid could be used on this filter.

The filter for the sulfate precipitate in the plant was a Carpenter 20 sintered stainless steel filter plate with a surface area of 0.5 sq ft. Filtration tests demonstrated that the welding of the Carpenter type filter medium reduced its filtration capacity by a factor of 10. For a similar-porosity filter plate fabricated from 347 stainless steel, welding had no significant effect on the filtration rate. On the basis of the filtration tests, a 347 sintered stainless steel filter of porosity H with a filter area of 3 sq ft was recommended. Colloidal graphite and activated carbon were tested as silica agglomerators to increase the effectiveness of the crud filters for silica removal, but the results were not conclusive. Colloidal graphite (Aquadag) readily agglomerated silica while activated carbon (Darco 60) did not show any agglomeration. The effect of this agglomeration on the silica content could not be determined. Further work on this problem was recommended.

TABLE 4.1

Variables Affecting the Yield of Barium Sulfate

Caustic Dissolution: 10-g sample, MTR Assembly, 1/450 scale
3.6 *M* NaOH, 3.6 *M* Al, 1.8 *M* $NaNO_3$

Acid Dissolution: Add 6 *M* H_2SO_4 to 0.8 *M* Al, 0.08 *M* NO_3, 0.2 *M* H^+
Theoretical concentration of Ba = 3.5×10^{-5} *M*
Reflux 2 hr; filter using 1-in. cake analytical grade filter aid

Wash: 1 *M* H_2SO_4

PRECIPITATION CONDITIONS		TEMPERATURE (°C)		BARIUM LOSS (%)		PRODUCT BARIUM SULFATE (%)
SULFATE (molarity)	BARIUM (molarity $\times 10^{-5}$)	FILTRATION	H_2SO_4 WASH	FILTRATE	H_2SO_4 WASH	
2.5	2.15	25	25	5.1	1.2	93.9
2.0	3.58	25	25	1.2	0.68	98.1
2.0	3.58	90-100	90-100	3.6	1.36	95.1
2.0	3.58	90-100	90-100	3.8	3.2	92.8
2.0	1.79	25	25	3.4	0.46	96.3
2.0	0.358	25	25	90.8	4.61	3.16

5. IDAHO CHEMICAL PLANT DESIGN

Engineering and Equipment Flowsheets. The final approved engineering flowsheet for the main line process was transmitted to Foster Wheeler on Feb. 9, 1951. Thirty-five process-equipment flowsheets were completed in sufficient detail to permit piping layout and arrangement, which was started in the New York Office of Foster Wheeler.

Vessel Arrangements. The vessel arrangement drawings were 95% complete, with 25 out of 26 sheets approved and transmitted to Foster Wheeler. The final criticality check will be made at ORNL by the criticality review group.

Process Vessels. Preliminary design of all vessels was complete except for the intercycle evaporators which are now being actively designed. Design of about 80% of the vessels was approved and will require further changes only to accommodate such flowsheet changes as may be made in the future. As of Feb. 10, 1951, 386 vessels were required in the Chemical Processing Building. Breakdown by types is as follows:

Standard tanks	98
Infinitely safe tanks	166
Pots and auxiliary vessels	70
Extraction columns	6
Infinitely safe evaporators	6
Stills	1
Condensers	39

Vendor's drawings for about 25% of the vessels were received. Of these, about 60% were returned approved for fabrication, which was scheduled to begin on March 1.

Process Instrumentation. Instruments, remotely operated valves, and auxiliaries were specified and requisitioned for approximately 80% of the main line process in Building 601. Approximately 80% of the required schematic drawings for instrument installation were complete. Instrumentation for the waste tank farm, the chemical waste evaporator, and the radioactive off-gas system was being developed at ORNL. Instruments for the Service Building, the ventilation, distilled-water, compressed air, and demineralized-water

systems and the steam boilers and vacuum pumps were being developed by Foster Wheeler in New York. Panel-board layouts for process panels were made in New York and are now being checked at ORNL. Specifications for radiation instruments are now being written at ORNL.

General Construction Progress. *Main Processing Building.* Building design drawings for concrete and steel have been completed by Foster Wheeler Corporation along with all necessary information on inserts, buried service lines, and openings. All drain lines at the lower building levels have been installed and are being tested. Concrete has been poured to approximately 3 ft above the access corridor level; wall penetration lines are now being installed in the forms. The established schedule for concrete work is as follows:

CELL	PURPOSE	CONCRETE COMPLETE
WG	Waste tank room	Feb. 17
WH	Waste tank room	Feb. 17
P, Q	First- and second-cycle extraction	March 1
U, W, Y	Extraction raffinate cells	March 10
R, S	Third-cycle extraction	March 17
T, X, V	Solvent feed, sample dilution, decontamination	March 31
K, Z	Solvent raffinate, third cycle, product storage	April 1
C, D, E	Dissolution and feed preparation	April 14
N	IAF storage	April 21
L, M	RaLa	May 1
J	Hot salvage	May 12
A, B	EBR dissolution, feed preparation	May 19
F, G, H	Spare dissolution cells	May 26
L,C	Product preparation	May 26
P, M	Process solution make-up area, ventilation and lample corridors, structural steel, siding, roofing	July 1

Laboratory and Administration Building. All drawings for concrete and steel have been completed and are released for construction. At the time of this writing concrete foundations and basement floor slabs were expected to be completed by Feb. 24, 1951. First and second floor slabs are planned for completion by June 23, 1951. Structural steel is scheduled for completion by May 20, 1951.

All preliminary information required for laboratory design has been transmitted to Foster Wheeler by the ORNL group. Furniture, analytical equipment, and special instruments have been ordered by ORNL.

Service Building. All necessary preliminary information required for the design of the Service Building and the facilities which it houses has been transmitted to Foster Wheeler. Design and procurement of the building and of the following service units is progressing in the Foster Wheeler office in New York.

1. Steam boilers.
2. Air supply fans and filters.
3. Air compressors.
4. Vacuum pumps (to be located in Buildings 601 and 602).
5. Distilled water stills (to be located in Building 602).
6. Potable and process-water supply systems, hot and cold.
7. Electrical distribution centers.
8. Demineralized-water units.

SF Storage Building. All concrete and structural steel have been installed. Electrical installation and equipment installation are progressing. This building is scheduled for completion in March 1951.

Waste Process Building. All preliminary information for the design of the Waste Process Building, including the waste evaporator, the hot off-gas system, fans, and associated equipment, has been transmitted to Foster Wheeler except for the rare gas removal system. Fans and blowers are being purchased. The order for the 250-ft stack has been placed. All vessels and piping for the chemical waste evaporator have been ordered.

At a policy meeting on Jan. 24, 1951, it was decided that the waste evaporator and the rare gas removal systems would be delayed to provide more man-power for work on first priority work for the main process building. It is now planned to start the plant by by-passing radioactive vent gases through filters directly to the stack, and to store radioactive chemical waste until the waste evaporator can be completed.

Waste Tank Farm. Flowsheets are approximately 60% complete and all tanks have been ordered. Foster Wheeler is proceeding with the design of all underground concrete lines and tank enclosures. Chicago Bridge and Iron has been awarded the contract for constructing the 50-ft-diameter permanent-storage tanks.

Dissolution of Uranium-Aluminum Alloy. The unit operation study of the dissolution of uranium-aluminum alloy in nitric acid with mercury as a catalyst was continued on a two-slug scale. The objective of this study was to obtain 100% dissolution of the metal charged to each cycle in less than 12 hr. It was also desirable to obtain a final solution more than 1 *M* in aluminum nitrate and less than 0.1 *M* in nitric acid. These objectives could not be obtained simultaneously. The uranium-aluminum alloy was dissolved to less than a 5% heel in 10 hr with relatively firm assurance that the metal heel remaining in the dissolver would be dissolved rapidly during the immediately following dissolution cycle. The final metal solution was 0.1 *M* in uranium, 1.1 *M* in aluminum, and 0.5 to 1.2 *M* in nitric acid. These results were checked by a series of runs on an eight-slug scale in the pilot plant dissolver. After a series of six dissolvings in the pilot plant, a clean-out run revealed that the amount of uranium and aluminum held up in the dissolver was considerably less than 5% of any one charge.

The dissolving was carried out by charging the metal to the dissolver, following which 4.35 moles of nitric acid per mole of alloy, with a concentration of 4.75 *N*, was added to the dissolver along with 5% of the alloy weight of mercuric nitrate. The solution was then heated to 100°C, and the temperature was controlled throughout the reaction between 100 and 102°C for a period of about 10 hr.

In qualitative laboratory studies it has been found that the uranium-aluminum alloy tended to passivate during dissolution and that the duration of passivation was a function of the number of pieces of metal being dissolved: the larger the number of pieces in the dissolver, the shorter the passivation time. This observation seems to be borne out by the increased dissolution rate of the pilot plant runs in which eight slugs were dissolved per run, while in the unit operations study only two slugs were dissolved per run. Adequate dissolution rate may be obtained in the full-scale operation with lower mercury catalyst concentration.

The recovery and reuse of nitric acid from the dissolver off-gas reduced the mole ratio of nitric acid to uranium-aluminum alloys from 3.9 to 3.6. The reduction of off-gas volume obtained by the oxidation of NO and removal of NO_2 by absorption in the reflux condensate was not so great as had been expected. This was probably due to production of large volumes of the non-oxidizable gases N_2O and N_2 during dissolution.

Decontamination of Dissolver Off-Gas. It has been specified that the radioactive gases be removed from the dissolver off-gas system. The major radioactive gases from the Idaho Chemical Plant dissolvers will be iodine, xenon, and krypton. It is anticipated that little or no iodine will be evolved, except during RaLa runs, because of the longer cooling time prior to processing. Study was initiated on a system composed of three major units — an oxidation chamber, a hot-metal-packed bed for the removal of oxide, and a low-temperature adsorption bed for xenon and krypton.

During the uranium-aluminum dissolution study, qualitative evaluation of the oxidation chamber was carried out. Excess oxygen was added to the dissolver gas before it entered the condenser and was allowed to react with the NO to give NO_2, which was absorbed in the condensate. Under these conditions, approximately 90% of the nitric oxide was recovered as nitric acid. One analysis of gases discharged from the condenser gave the following composition:

NO	0%	NO_2	5.4%	CO_2	0.4%
N_2O	8.2%	O_2	85.4%	N_2	0.6%

This indicated, by a material balance, that approximately 13% of the gas evolved from dissolution was N_2O. Further work to determine quantitatively the gases evolved during the dissolution of uranium-aluminum alloy is to be carried out along with studies of the oxidation rate of NO and the absorption rate of NO_2 in water.

Krypton and xenon could be more efficiently removed by adsorption from the oxidation chamber if the unadsorbed nitrogen oxides were not present. Also, if activated carbon was used as the adsorbing medium, oxygen would have to be minimized to prevent an explosion hazard in the carbon bed. By the use of a hot copper or a hot iron bed, the oxides of nitrogen may be reduced and the oxygen removed by reaction with the metal. A study was initiated with the hot copper bed because of prior industrial experience with this type of

operation. With a packed bed of copper turnings at 700 to 800°C, all the NO from an 8% NO–92% N_2 gas mixture was reduced until 37% of the theoretical capacity of the copper bed was utilized. The contact time for this reaction was about 1.5 sec. The bed was regenerated by passing pure hydrogen through it at a temperature of 300 to 400°C for a period of 4 to 6 min. Further tests with N_2O, NO_2, O_2, and water are planned.

Data on adsorption of xenon and krypton are being obtained for this operation by the Linde Air Products Company.

Clarification of Uranium-Aluminum Alloy Solution. In liquid-liquid solvent extraction operations carried out in packed columns, it is desirable to minimize the quantity of solid material introduced into the system. On the basis of several years of solvent extraction experience in the pilot plant, it has been found that only particles that settle out within 24 hr from a liquid depth of 8 in. are objectionable in such a system.

It was found by filtering representative solutions from the uranium-aluminum alloy dissolution through either a G or H porosity sintered stainless steel filter plate that all particles which would settle out in 24 hr had been removed. The particle size of these solutions before filtration was found to range from 5 to 700 μ, with a majority between 15 and 30 μ in size. Most of the particles appeared to be brown translucent material; the larger particles were more opaque and flaky. The filtrate from the G porosity filter contained particles that ranged from 5 to 30 μ, while the H porosity particles were all below 10 μ in size. It was found that the H porosity filter medium with a 5-μ pore size gave a faster filtration rate and greater filtration capacity than the G porosity filter with a 10-μ pore size. Further work on the evaluation of these two filters is to be done.

Two other filter mediums, 700 by 60 Dutch twill stainless steel cloth and F porosity stainless steel, were evaluated. However, particles which ranged up to 90 μ in size in the filtrate settled out in 24 hr; therefore these mediums were not satisfactory.

6. VOLATILITY STUDY

As a result of the laboratory investigation aimed at the development of a process for the separation of uranium, plutonium, and fission products by the utilization of their volatile fluorides, it has been concluded that the isolation of the plutonium fraction is not readily accomplished. Therefore the chief application of this type of process would be to enriched breeder reactors where the recovery of plutonium would not be an important factor. In future work two programs are to be followed. First, the improvement of the adsorption technique for the purification of uranium hexafluoride. By the use of this procedure, it will probably be possible to increase the amount of plutonium associated with the uranium from the solvent extraction process. The second phase of this study will be the development of basic information on the volatile compounds of uranium, plutonium, thorium, and the fission products. This information will be of value for the development of volatility processes for recovering uranium from enriched reactors.

Plutonium Adsorption on Alundum. The adsorption of plutonium on alundum was previously reported* as an effective method for the removal of plutonium from uranium hexafluoride. Adsorption studies on packed beds were started to determine the plutonium adsorption coefficients, and the first study has been completed, using a feed of variable composition. The evaluation of these data, using the equations derived on this basis, was not successful in establishing the adsorption coefficient. However, the following results were obtained:

1. Plutonium concentrations in UF_6 were reduced from 10^3 to less than 1 count/min per milligram of uranium by passing the gas through an alundum bed.
2. Uranium losses were less than 0.1%.
3. Apparently there is no reaction between alundum and fluorine or UF_6 at 100°C.
4. More than 90% of the adsorbed plutonium, uranium, and fission products can be washed from the alundum with 20% nitric acid.

This work is to be repeated using a constant feed.

Electrofluorination of Uranium. The electrofluorination of uranium was studied originally in an attempt to find a method for the preparation of the feed for a volatility process in the separation of uranium, plutonium, and

* ORNL-936.

fission products. Subsequently it was recognized that such a procedure could be used for the conversion of uranyl nitrate or uranium oxide to uranium hexafluoride as a feed material for the gaseous diffusion plant. This procedure would greatly simplify the present relatively involved process of converting uranyl nitrate to uranium trioxide to the tetrafluoride and then to the hexafluoride.

The dissolution of uranium metal into a KF·2HF electrolyte was readily accomplished. Uranium metal served as the anode, and nickel, copper, and iron were used in separate experiments as the cathode material. The valence of the uranium dissolved in the electrolyte solution was 3, and a large part of the uranium apparently combined with free fluoride ion and precipitated as UF_3. The rate at which the uranium went into the solution corresponded closely to the theoretical rate for the formation of uranium(III) (2.96 g per ampere-hour).

Other electrolytic solutions prepared by the addition of anhydrous HF to ammonium bifluoride and sodium fluoride were not satisfactory because of the high HF vapor pressure and the low boiling point (less than 100°C).

The gaseous products from the electrolytic cell operation were caught in a cold trap. It was found that no significant amount of UF_6 was produced under these conditions. The electrolytic conditions of this step are to be altered in hopes of producing UF_6.

The fluorination of UF_3 to UF_6 in the KF·2HF electrolyte at a fluorine-producing anode was not successful in preliminary steps carried out at 100°C. However, there are indications that this reaction may be more successful at higher temperatures, and this study is to be carried out.

7. RADIOCHEMICAL WASTE TREATMENT

Radiochemical Waste Evaporator. A single-point conductivity probe has been installed in the radiochemical waste evaporator to indicate when foaming occurs. This has been found to be useful to the operator, and a multipoint probe is now being fabricated to indicate variable foam levels. During the next quarter it is also planned to install a three-stage Peabody impingement baffle-plate scrubber on the vapor line from the evaporator for entrainment separation. The evaluation of this unit on the evaporator will essentially complete the development program associated with the evaporator.

Cottrell Electrostatic Precipitator. The Cottrell electrostatic precipitator with a capacity of 2000 cu ft of air per minute is installed on the off-gas system from the iodine production unit. The efficiency of the Cottrell precipitator for the removal of radioactive contamination from the air is approximately 80%. It was designed to operate at 75 kw with the tubes continuously flushed with water to minimize the build-up of activity in the precipitator. Considerable entrainment of the water in the air occurs in the precipitator, and this water with its included activity is carried over into the filter following. The conclusion has been reached that this unit is most satisfactorily operated without water flushing the tube.

8. ELECTROLYTIC DISSOLUTION STUDIES

Uranium in Nitric Acid. Uranium metal was electrolytically dissolved in 10% nitric acid with no gas evolution observed with a current of 1 amp per square centimeter and a temperature of 50°C. This corresponded to a penetration rate of 1 mm of uranium per hour. When the current density was increased to 3 amp per square centimeter, a slight evolution of gas was observed. In this cell, the uranium was the cathode while the nitric acid acted as a depolarizer for the cathode, resulting in an operation similar to that of a Grove-Bunsen cell. Further evaluation of this procedure is to be carried out with the objective of obtaining a fumeless dissolving procedure.

Uranium-Aluminum Alloy in Sodium Hydroxide. The study of the dissolution of uranium-aluminum alloy in sodium hydroxide by a battery action was continued in the laboratory to determine the relationship between current and time, and between current temperature and surface area. This cell was similar to an Edison cell with nickel oxide as the cathode, 20% sodium hydroxide as the electrolyte, and 2S aluminum as the anode with a 1½-in.-diameter 2S aluminum rod at 30°C. The current at the start was about 23.5 amp, increasing to a maximum of 25 amp after 20 min and then slowly decreasing to a minimum of 22 amp after 300 min.

As the temperature was increased from 30 to 90°C, the current developed by battery action increased from about 25 amp at 30°C to 33 amp at 60°C and 38 amp at 90°C. When the diameters of the aluminum rods were increased, the current developed increased linearly with the increase in surface area at 30°C. However, at higher temperatures the rate of current increase was less.

As 2S aluminum is dissolved in caustic, a black oxide film is formed on the surface owing to the presence of impurities such as calcium, copper, iron, magnesium, manganese, chromium, and nickel. Because of the low hydrogen overvoltage of some of these metals, the impurities serve as focal points for the liberation of hydrogen. However, it was found that with periodic interruption of the current the oxide film did not form. Two other methods, use of superimposed alternating current or periodic reversal of the polarity, were also found to be effective; however, these methods shortened the life of the nickel oxide cathode.

9. HOMOGENEOUS REACTOR CHEMISTRY

Uranium Trioxide—Bentonite Slurry. Bentonite-stablized slurries of uranium trioxide have been demonstrated to be stable at 250°C and 1000 lb/sq in. pressure for a period as great as 330 hr. Even after 562 hr the slurry did not cake until it had stood for more than 24 hr. It is planned to determine the effect of radiation on the stability of this slurry. If the radiation does not have a significant effect on its stability, this slurry may be useful in a homogeneous type reactor.

In this study the criterion for the stability of the slurry has been to cool the slurry to room temperature and then allow it to stand in a graduated cylinder for a period of time, determining the solids concentration in the solution as a function of the solution depth. In addition, the ease of re-suspending the solids and tendency of the slurry to cake was observed. It was felt that a slurry was satisfactory if it settled to less than 50% of its original volume in 24 to 48 hr and could be readily resuspended. Other factors that were observed were an increase in the iron content of the slurry and the presence of reduced uranium after heating. It was originally believed that the corrosion of the 347 stainless steel bomb was responsible for the breaking of the stable uranium suspension. However, tests repeated in sealed quartz tubes again resulted in unstable slurries when the tubes were heated for periods longer than 330 hr or at higher temperatures. The oxidation state of uranium was then examined, and it was found that 28 to 45% reduction of the original uranium trioxide had occurred (see Table 9.1). Studies were initiated to determine the mechanism of the reduction of uranium; however, no significant results have been obtained. Further work on this problem is proposed.

Uranyl Phosphate Slurry. Preliminary studies of a uranyl phosphate slurry indicated that it was relatively stable in water at high temperature. When formed under proper conditions, the uranyl phosphate was present as a bulky precipitate of long needles which occupied 45% of the total volume of a 40-g/liter slurry. Uranyl phosphate which was ground in a ball mill and screened through a 170-mesh screen settled rapidly from a water slurry to about 15% of the total volume.

It is planned to continue this work, investigating the effect of the addition of phosphoric acid and its sodium salts as stabilizers for the uranyl

TABLE 9.1

The Thermal Stability of Uranium Trioxide—Water Slurries Stabilized with Bentonite

Composition: Uranium, 40 g as anhydrous uranium trioxide

Bentonite, 1000 ml of slurry containing 12 to 15 g of electrodialyzed bentonite; average particle size below 25 mμ

Temperature: Heating cycle, 250°C

Sedimentation cycle, 20°C

VESSEL	HEATING TIME (hr)	SETTLING TIME (hr)	U CONCENTRATION (g/liter)				Fe CONCENTRATION (g/liter)		REDUCED URANIUM (%)
			SETTLED SLURRY			WELL MIXED			
			TOP	MIDDLE	BOTTOM		BEFORE	AFTER	
347 stainless steel	330	48	1.2	50.7	56.3	-	0.29[a]	0.48	
	562	24[b]	10.0	54.8	61.8	35.7	0.25[a]	0.83	28.4[c]
Quartz	768	24	0.4	2.0	107	35.0	0.08	0.16	44.5
	34[d]	24	1.9	45.0		37.0	0.08	0.14	44.9

(a) The method of preparation of the slurry resulted in the introduction of a large amount of iron.

(b) On longer standing the uranium oxide continued to settle out with caking.

(c) This value is probably low since the slurry was stored in contact with air for several months before analysis.

(d) 17 hr at 400°C + 17 hr at 250°C.

phosphate, since it is known that several of the various phosphates act as dispersants for suspended solids. A second investigation using mixtures of uranyl phosphate and uranium trioxide is also planned since, if such combinations are practical, they will represent an improvement with respect to neutron economy.

Thorium Oxide—Bentonite Slurry. Development work has been initiated with the objective of obtaining a stable thorium slurry which might be used as a breeding blanket for homogeneous type reactors. For this purpose, a slurry containing approximately 1000 g of thorium per liter is desired. This slurry must be stable under conditions similar to those for the uranium slurry, namely, 250°C and 1000 lb/sq in. pressure, and stable in neutron fluxes of 10^{11} to 10^{13}.

In preliminary studies a slurry composed of 1000 g of thorium per liter as thorium oxide and 30 g of bentonite per liter (Montomorillonite clay) was found to form a thixotropic slurry which was stable after heating 450 hr at 250°C and 1000 lb/sq in. pressure in a sealed quartz tube. The study of this problem is to be continued using synthetic bentonite.

Synthesis of Montmorillonite Clay (Bentonite). The naturally occurring Montmorillonite clays, which are marketed as bentonite, are composed of aluminum oxide, silicon dioxide, and magnesium dioxide in the mole ratio of 1:4:2. They also contain iron, sodium, and other materials with high thermal-neutron absorption cross-section which are not easily removed. In addition, the reproducibility of any commercially available bentonite is in doubt. Consequently, the possibility of synthesizing Montmorillonite in the laboratory was of interest.

Synthetic Montmorillonite clay was produced by heating a slurry of specially prepared aluminum hydroride, silicic acid, and magnesium dioxide in water in an autoclave at 300°C and at the equilibrium vapor pressure of water, approximately 1200 lb/sq in. X-ray studies of this material indicated that the Montmorillonite clay had been obtained. Work on this problem will be continued.

Fuel Processing. There are two major phases to the homogeneous fuel processing program; the first concerns the Homogeneous Reactor Experiment (HRE) and the second concerns processes for future homogeneous reactors. For

the HRE process phase, minor alterations of the existing Purex Process will be sufficient to recover and decontaminate the fissionable material in solvent extraction equipment located at ORNL. For future homogeneous reactors a processing technique is probably feasible which will reduce the processing cost significantly. The general procedure will be to remove the plutonium and fission products from the homogeneous reactor fuel without altering the fuel composition. This allows the fuel to be returned directly to the reactor and reduces the fuel inventory for the reactor. Experiments are now in progress on an ion-exchange procedure for the extraction of plutonium and fission products from a uranyl sulfate solution. A second procedure involving electrochemical precipitation is under consideration.

The ion-exchange study was concerned with the study of ion-exchange resin stability under β radiation and with the development of a procedure applicable to the HRE.

Since the fuel is to be processed after a short cooling period, to keep the fuel inventory low, the radiation stability of the organic ion exchangers employed is of major concern. According to radiation energy absorbed from a Co^{60} γ source, Dowex 50 loses about half its capacity after absorption of 2 to 3 kwh per kilogram of resin (see Table 9.2). Assuming for the HRE a processing cycle which allows one day of cooling and a 1% fission product build-up in the reactor (5% increase in inventory), about 1 lb of resin will be used per day to adsorb 1 g of fission products.

TABLE 9.2

Capacity Loss of Dowex 50 Resin on Absorption of Radiation Energy from Co^{60} Gammas

SAMPLE	RADIATION ENERGY ABSORBED (kwh/kg of resin)	RESIN CAPACITY REMAINING (%)	REMARKS
1	0.7	74	Exposed to air
	0.9	65	Exposed to air
	1.3	56	Exposed to air
	2.0	56	Sealed in tube
	3.0	41	Sealed in tube
2	0.6	93	Sealed in tube
	2.2	69	Sealed in tube

New interest is taken in the phenolic ion exchangers since they have been found, in the initial test, to be as stable to radiation as Dowex 50. The phenolic resins have, in general, about one-third the capacity of the styrene resins and are not so chemically stable to oxidizing conditions. However, they yield their holdup uranium much faster. In a processing cycle where speed and low uranium loss are vital, the phenolic resins may compete with the higher capacity Dowex 50.

Greensand, a natural aluminum-iron silicate mineral, and Decalso, a synthetic aluminum silicate, were studied. Each exhibited unusual affinity for zirconium, niobium, and cesium, and their holdup uranium was only 2 to 5% of that of Dowex 50. However, about twenty times as much adsorber was needed as for Dowex 50 before rare earth breakthrough occurred. The uranium could neither be selectively eluted from the adsorbed rare earths nor removed completely. The best foreseen application for these adsorbers is in cases in which they can be used for a long period of time to adsorb fission products for which they have a high affinity, where no elution step is contemplated, and where any uranium loss can be ignored.

Scouting tests have been run on some of the natural and synthetic aluminum silicate ion exchangers on the assumption that, being inorganic, they are more stable to radiation. However, their elution and separation characteristics are so inferior to those of the organic exchangers that these products are not being considered at the present.

The present process development is aimed at achieving fission product removal to a concentration equal to 1% of that of the fissionable material, and at providing chemical processing with very low uranium losses. As the process is now visualized, 5% of the reactor charge will be withdrawn per day, cooled for one day, and passed through a fuller's earth bed for the removal of zirconium, niobium, and cesium. The solution will then pass to a Dowex 50 cation-exchange column where all the remaining fission products with the exception of ruthenium, molybdenum, and tellurium will be removed. These last-mentioned elements are then removed by passage of the fuel solution through a Dowex A-1 anion-exchange column. Present indications are that the approximate size of these columns will be about 1 liter for a reactor about the size of the HRE. Radiation stability measurements on ion-exchange resins indicate that the life of the cation exchangers will be about one day.

10. CHALK RIVER MATERIAL — FINAL CONCENTRATION AND PURIFICATION

The final concentration and purification of the plutonium from six batches of Chalk River material and one batch of Hanford material have been completed. The final product solution contained approximately 90% of the plutonium with uranium, iron, aluminum, and chromium as the principal contaminants, 0.08, 0.05, 0.5, and 2.7 mg per gram of plutonium, respectively. The decontamination factor for the isolation cycle was 1.3 to 1.5 with a β and γ activity in the final product of 2.7×10^4 β counts/min per milligram of plutonium at 10% geometry, and 1.5 millivolts of γ activity per milligram of plutonium. The waste solution containing approximately 10% of the plutonium was stored, and a process study was initiated substituting tributyl phosphate for the methyl isobutyl ketone solvent. During the course of the development program this plutonium will be recovered.

A three-cycle methyl isobutyl ketone solvent extraction process was used for the isolation of the plutonium. This process proved to be very unsatisfactory, owing principally to the difficulty of oxidizing and reducing plutonium quantitatively when present in high concentration together with aluminum nitrate. The second factor that contributed to the processing difficulties was the unexpectedly large amounts of corrosion products and decomposition products present in the plutonium feed to this process.

The three cycles of the plutonium isolation process consisted of the first cycle under oxidized conditions for the separation of the plutonium and uranium from the corrosion products and organic decomposition products; the second cycle, for the separation of the uranium from the plutonium under reduced conditions; and the third cycle, for the final recovery of the plutonium in an aqueous phase under oxidized conditions. It was previously planned to use a two-cycle solvent extraction process as reported in ORNL-846; however, the large amount of corrosion products, which approximately equaled the gram quantities of plutonium, recommended the use of a clean-up solvent extraction cycle under acidic oxidized conditions for the removal of these corrosion products as well as some organic decomposition products. The aqueous strip product from the first cycle was then evaporated to dryness to remove the excess acid and dissolved in 1.5 *M* aluminum nitrate plus 0.5 *M* nitric acid.

The plutonium in this solution was reduced by heating the solution to 75°C for 3 hr with 0.4 *M* hydrazine nitrate as the reducing agent. The resulting solution then went through a second extraction and stripping step; in this cycle the highest plutonium loss occurred. During the reduction of the plutonium a solvent-extractable plutonium complex remained after reduction, and this resulted in approximately 10% plutonium loss. A study of alternate reducing agents was made, but none was found that was successful in improving the plutonium yield in the second cycle. The aluminum nitrate solution containing the plutonium from the second cycle was then acidified and oxidized in the presence of 0.1 *M* excess sodium dichromate.

11. SPECIAL EQUIPMENT DEVELOPMENT AND TESTING

Lead Shot Transfer Jet. The use of lead shot as a shielding material has been incorporated in the design of the ORNL RaLa Plant because this shield may have to be removed occasionally for equipment maintenance. A jet has been designed to draw off the 1/16-in.-diameter lead shot through a 1-in. pipe to the height of 8.5 ft. The maximum efficiency of the jet was obtained at air pressure of 42 lb/sq in. Under these conditions 0.7 lb of lead shot was transferred per second (see Fig. 11.1).

Lapp Pulsafeeder Pump, Model CPS-1. This pump, which is equipped with stainless steel cone type check valves and a ¾-in. piston, was operated at 60 strokes per minute. It has been operated continuously for 109 days. The delivery rate was checked weekly over the range of 10 to 405 ml/min with maximum variations in flow rate of 4.8% at the low rate and 2.9% at the high rate. The solution, a synthetic waste metal solution with a specific gravity of 1.37 to 1.43, was pumped to a height of 30 ft above the flooded suction side of the pump. The solution was continuously recycled through the system, being pumped through a 1-in.-diameter by 12-in. section of glass pipe packed with ¼-in. Fenske rings which served as a filter. It was concluded that this pump could be used for the column feed pump for the ORNL Metal Recovery Plant.

Specific Gravity Probe for Boiling Solutions. Pneumatic systems are generally used for the determination of specific gravity as well as liquid level in radiochemical process vessels. However, when boiling was taking place in the vessel, the reading obtained was not significant. This situation has been corrected by the use of a double shell placed around the end of the probe in the solution and of type D snubbers (marketed by the Chemiquip Company) in the air line before it enters the instrument. Two types of guards were demonstrated, one which used 40-mesh stainless steel screen and the other which used perforated stainless steel sheets (see Fig. 11.2). They both gave satisfactory operation; however, since the stainless steel sheet unit was more rugged, it was preferred.

Yarway and Velan Thermostatic Steam Traps. The use of thermostatic steam traps on jacketed vessels makes it possible to drain both the steam and the water from the bottom of the jacket, thus eliminating several valves. The use of bottom-drained jackets for water cooling is less efficient; however, this method has been satisfactorily used with jacketed vessels up to 300 gal capacity.

DWG. 10979

FIG. 11.1

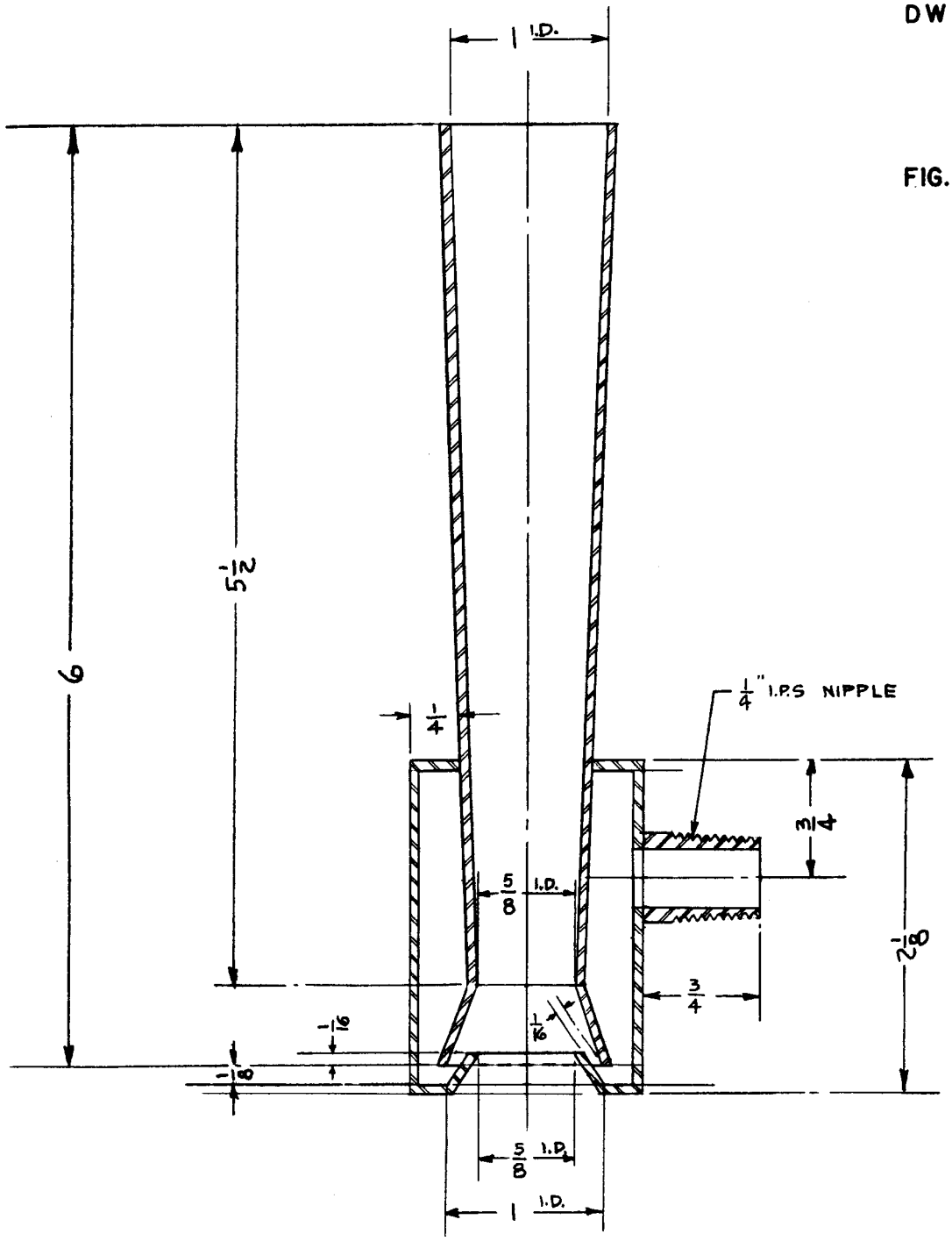

LEAD SHOT TRANSFER JET.

MAT'L - 16 GA. SHEET METAL (BLK. IRON)

Not Classified

DRAWN - G.B.B. 2-13-51

SCALE - FULL SIZE

DWG. 10980

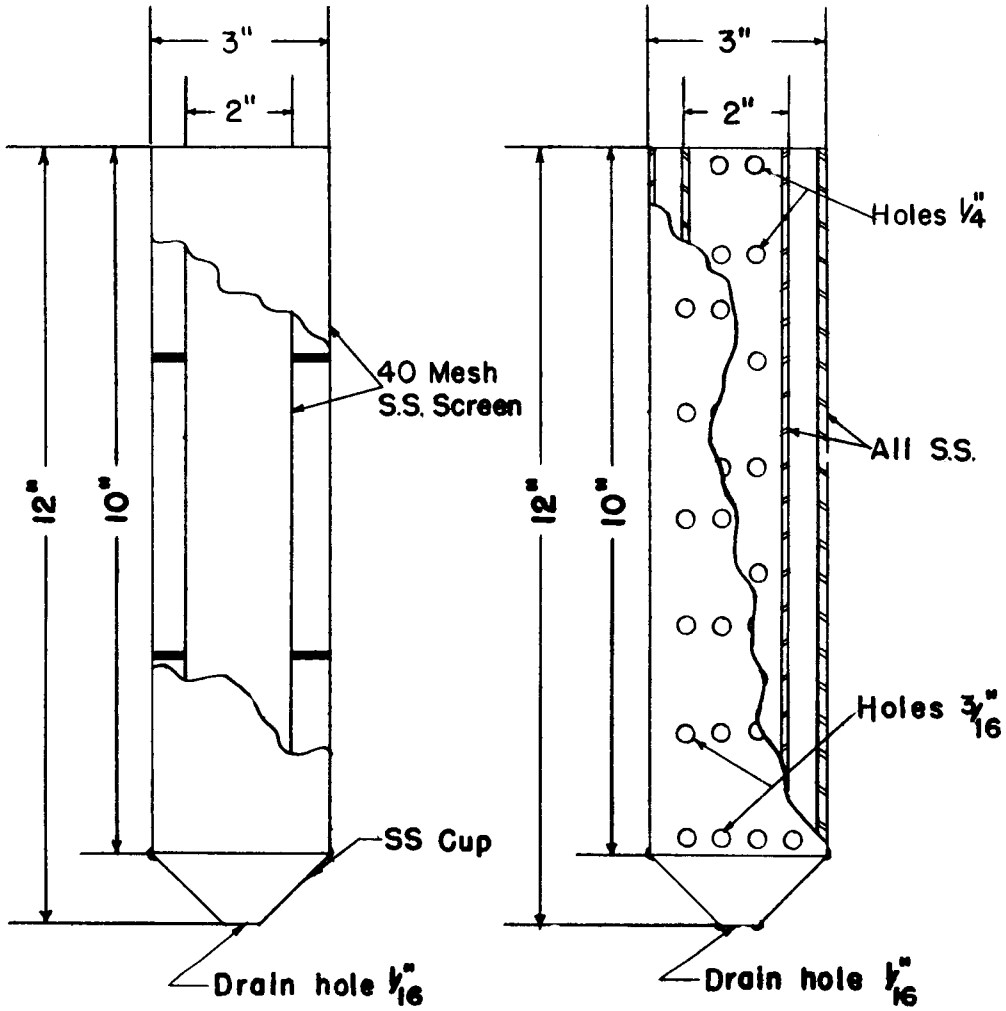

NOT CLASSIFIED

Unit Operations Section
Chemical Technology Division
Date 12/14/50 Dwg. # UNOP-19
PROBE GUARDS, SpG Control

FIG. 11.2

Drawn By G. B. Dinsmore

The Yarway and Velan traps were tested to determine operability and capacity. The Yarway trap operated satisfactorily with a water capacity of 500 to 1000 lb/hr for the ½-in. size and of 1400 to 2400 lb/hr for the 1-in. size at 10 to 50 lb/sq in. pressure. The Velan trap was not satisfactory because of its failure to seat properly and also because adjustment, dependent on the steam pressure, was required to obtain proper operation.

Swagelok Fittings (Crawford Fitting Company). Stainless steel Swagelok fittings have been leak tested on 3/8-in. stainless steel tubing under pressure in a system filled with 1.5 *M* aluminum nitrate. The fittings were assembled according to the manufacturer's directions and then 78-lb/sq in. air pressure was applied for 4 min and released for 1 min, and then this cycle was repeated. These pressure cycles were repeated for 24 days by means of a solenoid valve connected to a timer and counter.

During this period, a total of five leaks occurred in the 12 Swagelok fittings under test. All the leaks were stopped by tightening the fittings an additional one-sixteenth turn above the one and one-quarter turn recommended by the manufacturer. These fittings are to be taken apart, inspected, reassembled, and then tested at a pressure of 20 to 40 lb/sq in. gauge.

Radiation Stability Tests of Plastics. The radiation level in the Idaho Chemical Processing Plant is higher than that previously experienced in other radiochemical plants. The little information available indicates that the radiation levels in the Idaho plant will be sufficient to cause damage to the organic materials used for protective paint, gasket materials, greases, and electrical insulation. A study was therefore initiated to determine the radiation stability of the materials to be used in the Idaho plant, where the radiation levels expected are 10^9 r of β and γ radiation per hour at liquid contact and 4×10^4 r of γ activity per hour through vessel walls. Irradiation of samples to a γ dosage of 10^9 r was recommended as a method of evaluating these materials. This is equivalent to 2.5 years of usage.. The work is being carried out using the Van de Graaff electron beam and Co^{60} as the radiation sources. The program is to be carried out with the cooperation of the Chemistry Division and the Reactor Technology Division.

Vinyl Base Paint. Two vinyl base paints, Corrosite-22 and Amercoat-33, were exposed for 6 sec, 1 min, and 10 min to a 10-μamp beam of 2-Mev electrons from the NEPA Van de Graaff. The 6-sec samples were not visibly damaged;

however, tiny pimples appeared in the 1-min samples and the 10-min samples were badly blistered. These last two results were apparently due largely to temperature effect.

Plastic Gasket Material. Samples of plastic gasket materials, polyethylene, polystyrene, and teflon were exposed under water in a dry state to 10^8-r γ radiation from a cobalt source. The teflon sample was broken during handling afterward, indicating marked deterioration, but the polyethylene and polystyrene retained their flexibility. Standard ASTM tests are now being conducted on these samples, and further radiation at 10^9 r is planned.

Vacuum Relief Valves for Steam Lines to Jets. Immediately following the operation of the steam jet it is necessary to vent the steam line to the jet in order to prevent the condensation of the steam from sucking the solution from the jet back into the steam line. A ½-in. brass cone check valve, a ¼-in. brass swing check valve, and a ½-in. brass Hoffman radiator trap were evaluated as a means of venting the steam line. With a steam system operated at 65 lb/sq in. gauge, these valves were operated for 2000 on and off cycles. The ½-in. cone check valve proved to the most satisfactory with the ¼-in. brass swing check valve operable. However, the Hoffman trap failed to vent quickly enough to be recommended for this use. Examination of the check valves after tests indicated that the life expectancy of these valves would be at least 10,000 operations.

Plastic Valve Test. Special valves have been designed for service in the RaLa Plant. The valves are of three types:

1. Teflon plug: fluorothene liner type (three to five ports) for feed distribution to the ion-exchange columns (see Fig. 11.3).
2. Stainless steel plug: teflon-lined valves (four ports) for sampling.
3. Fluorothene diaphragm valves: valves (two ports) for column feed control (see Fig. 11.4).

These valves were leak tested with water at 15 lb/sq in. gauge.

Seventy-five percent of the types 1 and 2 valves leaked in the initial test. The rejected valves were reworked by replacing plug or liner, and the 0.06-in.-diameter wire spring was replaced with a 0.106-in.-diameter stainless steel wire spring on all type 1 valves. The test results indicate that leakage

DWG.10981
UNCLASSIFIED

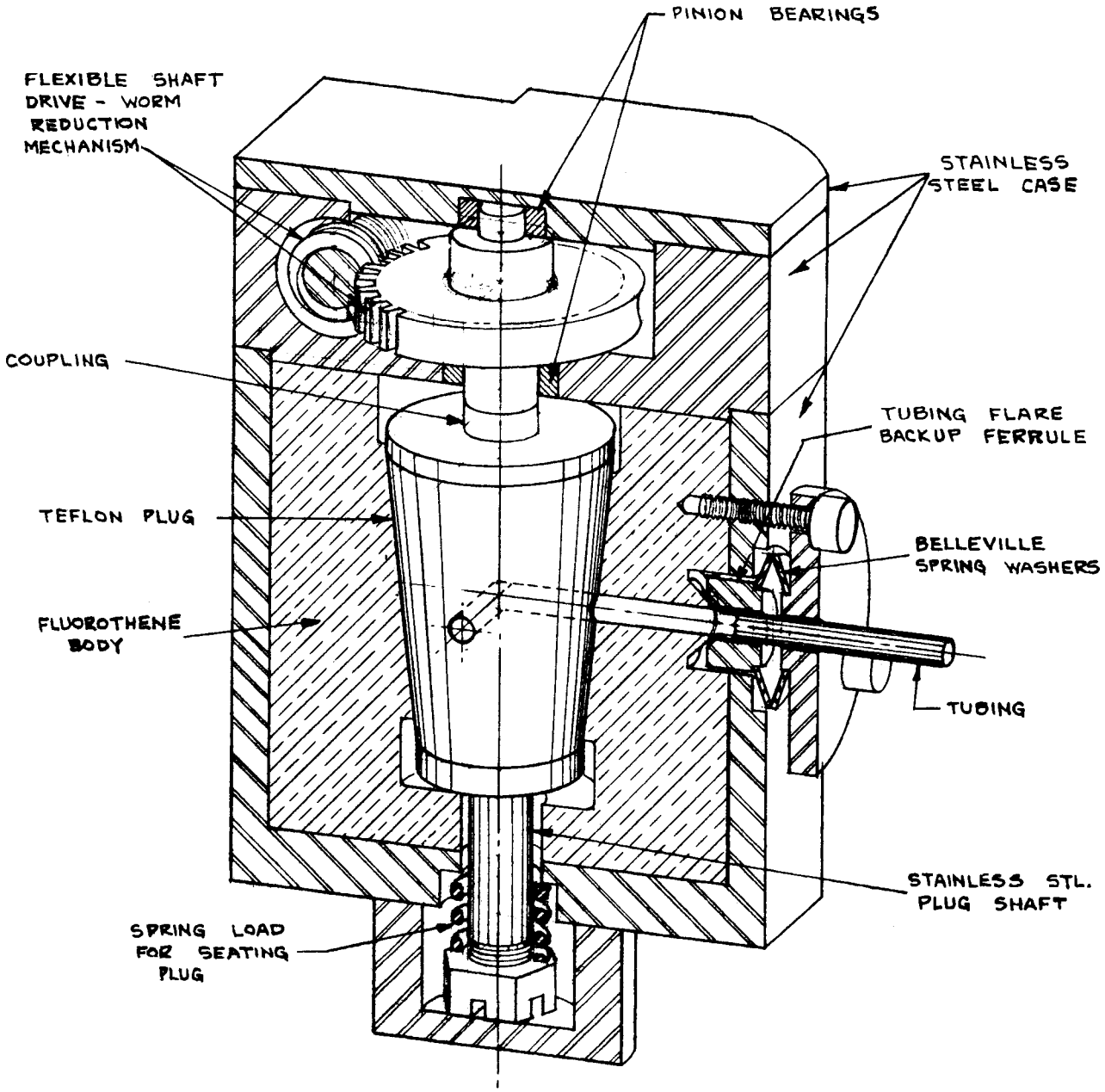

FIG.11.3

PLASTIC PLUG VALVE

DWG. 10982
UNCLASSIFIED

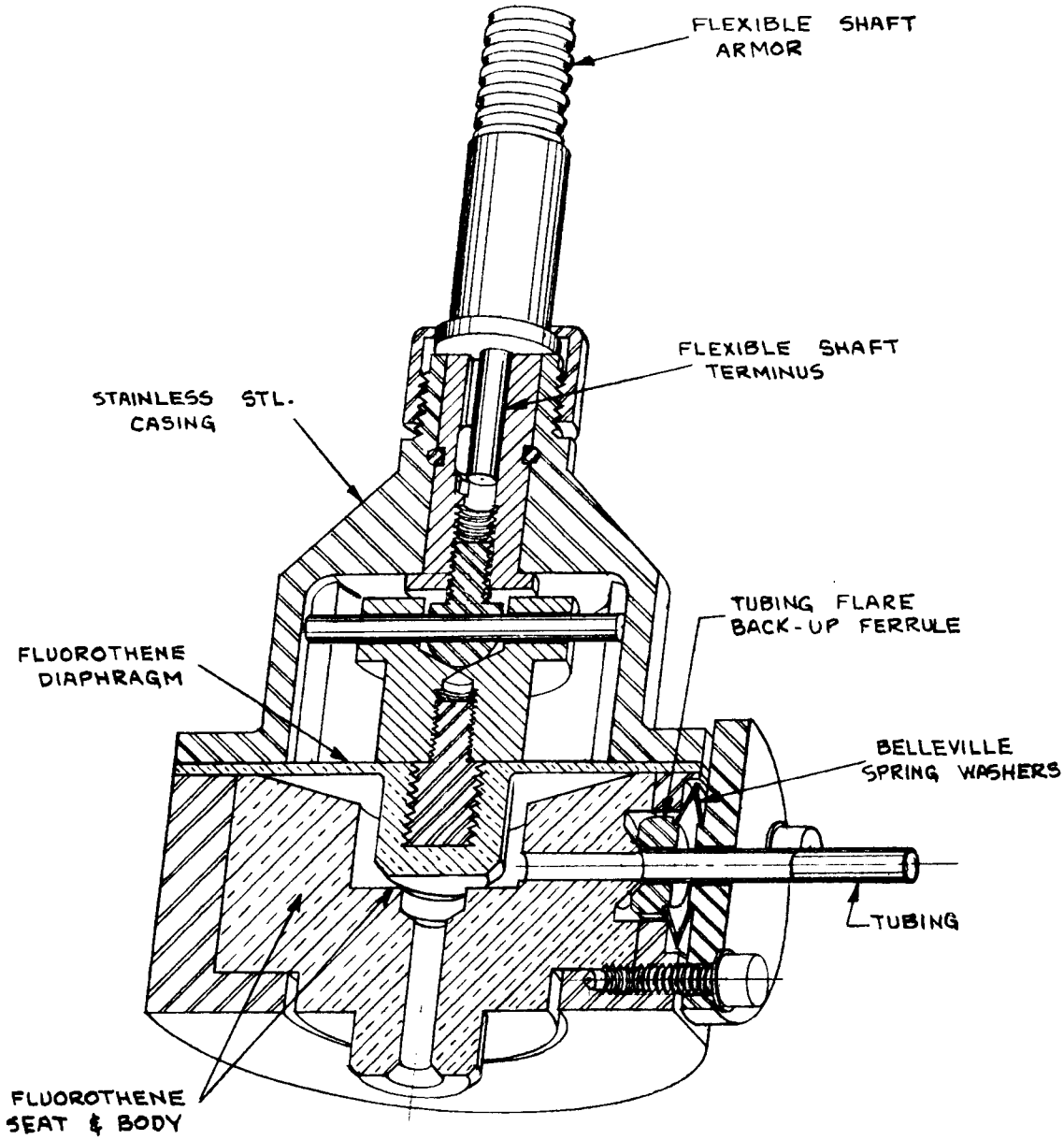

FIG. 11.4

PLASTIC DIAPHRAGM VALVE

developed because of (1) temperature changes which cause the plastic to flow enough to unseat the plug, and (2) excessive torque on the plug which tends to warp when revolved. The valves were considered adequate for service in the RaLa process after reworking, but are not recommended for service under pressure greater than 5 lb/sq in.

The fluorothene diaphragm feed valves (type 3) were initially leaktight for a three-day period and were recommended for installation.

The ½-in. teflon-lined plug valve manufactured by the Duriron Company has been on the test stand at 85 lb/sq in. gauge water pressure for six months and no leakage has developed. This valve has a molded inserted teflon liner and is definitely superior to machined liners. It is recommended therefore that molded linings be used in future valves of this type.

12. DECONTAMINATION OF STAINLESS STEEL BY ELECTROSTRIPPING

It was previously reported (ORNL-936) that electrostripping had been found to be very effective for decontamination of stainless steel equipment. On the basis of this work a study has been initiated to determine (1) the conditions for decontamination, (2) the rate of corrosion, and (3) the effect of electrostripping in subsequent contamination and corrosion. To date this study has been limited to type 347 stainless steel.

A set of stainless steel disks were contaminated by a standard procedure and then washed with water and nitric acid to remove the superficial contamination. Decontamination efficiency of various electrolytes at various densities of current indicated that 10% sulfuric acid solution resulted in decontamination factors comparable to those obtained in the electropolishing solution (45% phosphoric acid—40% sulfuric acid, or 100% phosphoric acid) and that the resulting corrosion was less.

A second decontamination study was carried out using samples cut from a ½-in. dip pipe from the pilot plant A6 hot feed tank. This tank had been used for 2½ years, during the operation of the Redox, the 25, and the Chalk River Processes, after which it had been thoroughly washed with decontaminating solution. In this case a 20% phosphoric acid—20% sulfuric acid electrolyte was effective in reducing the activity from 93,000 to 15 counts per minute in 30 min, using a current density of 1 amp/sq in. In this study it was also shown that increasing the current density from 1 to 4 amp/sq in. increased the decontamination by less than a factor of 2.

The electrolytes 45% phosphoric acid—40% sulfuric acid, 100% phosphoric acid, 30% phosphoric acid—60% sulfuric acid, sulfuric acid—phosphoric acid, and sulfuric acid—citric acid were evaluated to determine the effect of the electrolyte on corrosion of type 347 stainless steel. It was found that the corrosion rate was a function of the current density and independent of the electrolyte composition and that the corrosion rate increased as the current density decreased from 1 to 0.1 amp/sq in. In addition, it was found that below 0.5 amp/sq in. polishing did not occur.

[redacted]

PUBLICATIONS

DOCUMENT NO.	TITLE	AUTHOR	DATE
	PUREX		
CF-50-12-4	Purex Process Flowsheet #2	W. B. Lanham F R Bruce	12/4/50
ORNL-890	Evaluation of TBP in Jet Mixing Columns as a Solvent for Uranium Extraction from Slurry-Type Ore Feeds	J. H. Yeager T. C. Runion	12/7/50
CF-51-1-32	Purex Waste Sample	F. L. Steahly	1/12/50
CF-51-1-10	A Review of the Relative Merits of Packed Columns, Pulse Columns, Mixer-Settler Mechanisms	A. C. Jealous E. C. Stewart	1/8/51
CF-51-1-73	Request for Irradiation Hanford Slugs	H. K. Jackson	1/25/51
CF-51-1-91	Pilot Plant Program	H. K. Jackson	1/30/51
	25 PROCESS		
CF-50-12-51	Minutes of Meeting with American Cyanamid Personnel at ORNL, 12/5/50	D. G. Reid	12/18/50
CF-50-12-82	Preliminary Estimate of Percolator Requirements for Fumeless Dissolver	S. H. Jury	12/28/50
CF-51-1-63	Corrosion of Type 347 Stainless Steel by 1st Cycle Raffinate	F. L. Culler	1/23/51
CF-51-2-34	Ferrous Metal Packings for use in Fumeless Dissolver Gas Purification Train - Status Report	S. H. Jury	2/7/51
	RaLa PROCESS		
CF-50-12-2	Corrosion Test - MTR RaLa Equipment	E. M. Shank	12/1/50
CF-51-1-12	RaLa Process Filtration	T. A. Arehart I. R. Higgins R. E. Blanco	1/8/51
CF-51-1-45	Preparation of MTR Assemblies	R. E. Blanco E. M. Shank	1/16/51
	PROGRESS REPORT		
ORNL-936	Chemical Technology Division Quarterly Report for Period Ending 11/20/50	Edited by W. K. Eister	1/31/51
	URANIUM EXTRACTION FROM ORE		
CF-51-1-26	Ore Refinery Conference, St. Louis, 1/3-4/51	E. C. Stewart	1/11/51

[redacted]