UNCLASSIFIED

MARTIN MARIETTA ENERGY SYSTEMS LIBRARIES

3 4456 0360867 4

ORNL 1003

9a

GAMMA-RAY CONTAMINATION IN THE THERMAL NEUTRON EXPOSURE FACILITY OF THE OAK RIDGE REACTOR

OAK RIDGE NATIONAL LAB
CENTRAL RESEARCH
CIRCULATION SECTI
4500N ROOM 175
LIBRARY LOAN
DO NOT TRANSFER TO ANOT
If you wish someone else t
report, send in name with
the library will arrange
UCN-7969 (3 9-77)

OAK RIDGE NATIONAL LABORATORY
OPERATED BY
CARBIDE AND CARBON CHEMICALS COMPANY
A DIVISION OF UNION CARBIDE AND CARBON CORPORATION
UCC
POST OFFICE BOX P
OAK RIDGE, TENNESSEE

UNCLASSIFIED

U N C L A S S I F I E D

Report Number: ORNL-1003

This document consists of
37 pages, Copy 9
of 202 Series A.

Contract No. W-7405-Eng-26

BIOLOGY AND HEALTH PHYSICS DIVISIONS

GAMMA-RAY CONTAMINATION IN THE THERMAL NEUTRON EXPOSURE FACILITY OF THE OAK RIDGE REACTOR

Edgar B. Darden, Jr., C. W. Sheppard, L. C. Emerson

DATE ISSUED

OAK RIDGE NATIONAL LABORATORY
operated by
CARBIDE AND CARBON CHEMICALS COMPANY
A Division of Union Carbide and Carbon Corporation
Post Office Box P
Oak Ridge, Tennessee

MARTIN MARIETTA ENERGY SYSTEMS LIBRARIES
3 4456 0360867 4

U N C L A S S I F I E D

INTERNAL DISTRIBUTION

1. G. T. Felbeck (C&CCC)
2-3. Chemistry Library
4. Physics Library
5. Biology Library
6. Health Physics Library
7. Metallurgy Library
8-9. Training School Library
10-13. Central Files
14. C. E. Center
15. C. E. Larson
16. W. B. Humes (K-25)
17. W. D. Lavers (Y-12)
18. A. M. Weinberg
19. E. H. Taylor
20. E. D. Shipley
21. A. Hollaender
22. F. C. VonderLage
23. R. C. Briant
24. J. A. Swartout
25. S. C. Lind
26. F. L. Steahly
27. A. H. Snell
28. M. T. Kelley
29. K. Z. Morgan
30. J. S. Felton
31. A. S. Householder
32. D. W. Cardwell
33. E. M. King
34. E. B. Darden, Jr.
35. C. W. Sheppard
36. L. C. Emerson
37. J. Furth
38. E. E. Anderson
39. G. E. Stapleton
40. A. D. Conger
41. J. S. Kirby-Smith
42. M. J. Skinner
43. Central Files (O. P.)

EXTERNAL DISTRIBUTION

44-51. Argonne National Laboratory
52. Armed Forces Special Weapons Project
53-55. Atomic Energy Commission, Washington
56. Battelle Memorial Institute
57. Brush Beryllium Company
58-61. Brookhaven National Laboratory
62. Bureau of Medicine and Surgery
63-66. Carbide and Carbon Chemicals Company (K-25 Plant)
67-70. Carbide and Carbon Chemicals Company (Y-12 Plant)
71. Cleveland Area Office
72. Columbia University (J. R. Dunning)
73. Columbia University (G. Failla)
74-78. E. I. duPont deNemours and Company
79-84. General Electric, Richland
85-90. Idaho Operations Office
91-92. Iowa State College
93. Kellex Corporation
94. Kirtland Air Force Base
95-96. Knolls Atomic Power Laboratory
97-99. Los Alamos Scientific Laboratory
100. Mallinckrodt Chemical Works
101. Massachusetts Institute of Technology (A. R. Kaufmann)
102-104. Mound Laboratory
105. National Advisory Committee for Aeronautics
106. National Bureau of Standards (R. D. Huntoon)
107. Naval Medical Research Institute

108-109. Naval Radiological Defense Laboratory
110. New Brunswick Laboratory
111-113. New York Operations Office
114. North American Aviation, Inc.
115. Patent Branch, Washington
116. RAND Corporation
117. Sandia Corporation
118. Santa Fe Operations Office
119. Savannah River Operations Office
120. Sylvania Electric Products, Inc.
121-135. Technical Information Service, Oak Ridge
136. U. S. Geological Survey (T. B. Nolan)
137-138. U. S. Public Health Service
139. University of California at Los Angeles
140-145. University of California Radiation Laboratory
146-147. University of Rochester
148. University of Washington
149-152. Western Reserve University
153-154. Westinghouse Electric Corporation
155. Dr. R. Antonelli
156. Armed Forces Institute of Pathology
157. Army Medical Library, Director
158-161. Atomic Energy Project, Chalk River
162. Chief of Naval Research
163. Dr. B. Harris
164. Harshaw Chemical Corporation
165. Isotopes Division (Mr. McCormick)
166-167. Library of Congress, Acquisition Department (J. W. Cormn)
168. Medical Research and Development Board
169. National Bureau of Standards (Library)
170. National Institute of Health
171. National Research Council, Ottawa
172. Naval Research Laboratory
173. Nevis Cyclotron Laboratories
174-175. Oak Ridge Institute of Nuclear Studies
176-185. United Kingdom Scientific Mission (M. Greenhill)
186. USAF, Air Surgeon (Colonel A. P. Gagge)
187. USAF, Director of Research and Development (Major Fred W. Bruner)
188-192. USAF, Wright-Patterson Air Force Base (CADO)
193. U. S. Army, Army Medical Service Graduate School (Col. W. S. Stone)
194. U. S. Army, Atomic Energy Branch (Lt. Col. A. W. Betts)
195. U. S. Army, Director of Operations Research (Dr. Ellis Johnson)
196-197. U. S. Army, Office of the Chief Signal Officer (Curtis T. Clayton through Major George C. Hunt)
198-200. U. S. Army, Technical Command (Colonel J. H. Rothschild, Attention: Technical Library)
201. University of Chicago Toxicity Laboratory
202. UT-AEC Agricultural Research Program (Charles S. Hobbs)

GAMMA-RAY CONTAMINATION IN THE THERMAL NEUTRON EXPOSURE FACILITY OF THE OAK RIDGE REACTOR

Edgar B. Darden, Jr., C. W. Sheppard, L. C. Emerson*

To permit studies on the biological effects of thermal neutrons a special exposure facility as diagrammed in Fig. 1 was installed in the thermal column of the Oak Ridge reactor. The exposure cavity is lined with a layer of bismuth several inches thick to further attenuate any γ radiation from the reactor not absorbed in the multiple layer of Bi brick forming the floor of the column. However, studies with a Victoreen dosimeter by Conger and Stapleton (1) indicated the inherent γ-ray intensity in the cavity amounted to $\sim$6 r/min. This type of instrument is not well suited for this kind of work since it emits capture γ rays of its own. Also the introduction of such a device may disturb the existing distribution of neutron flux somewhat, so that the reading obtained will not reflect the intensity of capture γ radiation normally present. In this report are described additional studies of the radiation in the exposure facility utilizing a specially designed ion chamber with a low cross section for thermal neutron capture.

ESTIMATES OF INTENSITIES DUE TO CAPTURE GAMMA RADIATION FROM GRAPHITE AND BISMUTH

At the start it was desirable to look into the possibility that the offending γ radiation originates primarily from normal capture processes in the surrounding media. In the capture process the energy corresponding to the mass difference in the initial and product nuclei is emitted as γ radiation. Also capture processes in the irradiated sample as well as

* National Research Council Fellow in Radiological Physics

Fig. 1

DIAGRAM OF THERMAL NEUTRON EXPOSURE FACILITY AND ACCESS SHAFT

The lower half of the shaft into the thermal column is shown in cut-away view. The graphite plug is all the way in so that the exposure box is in the treatment position.

Drawing #11671

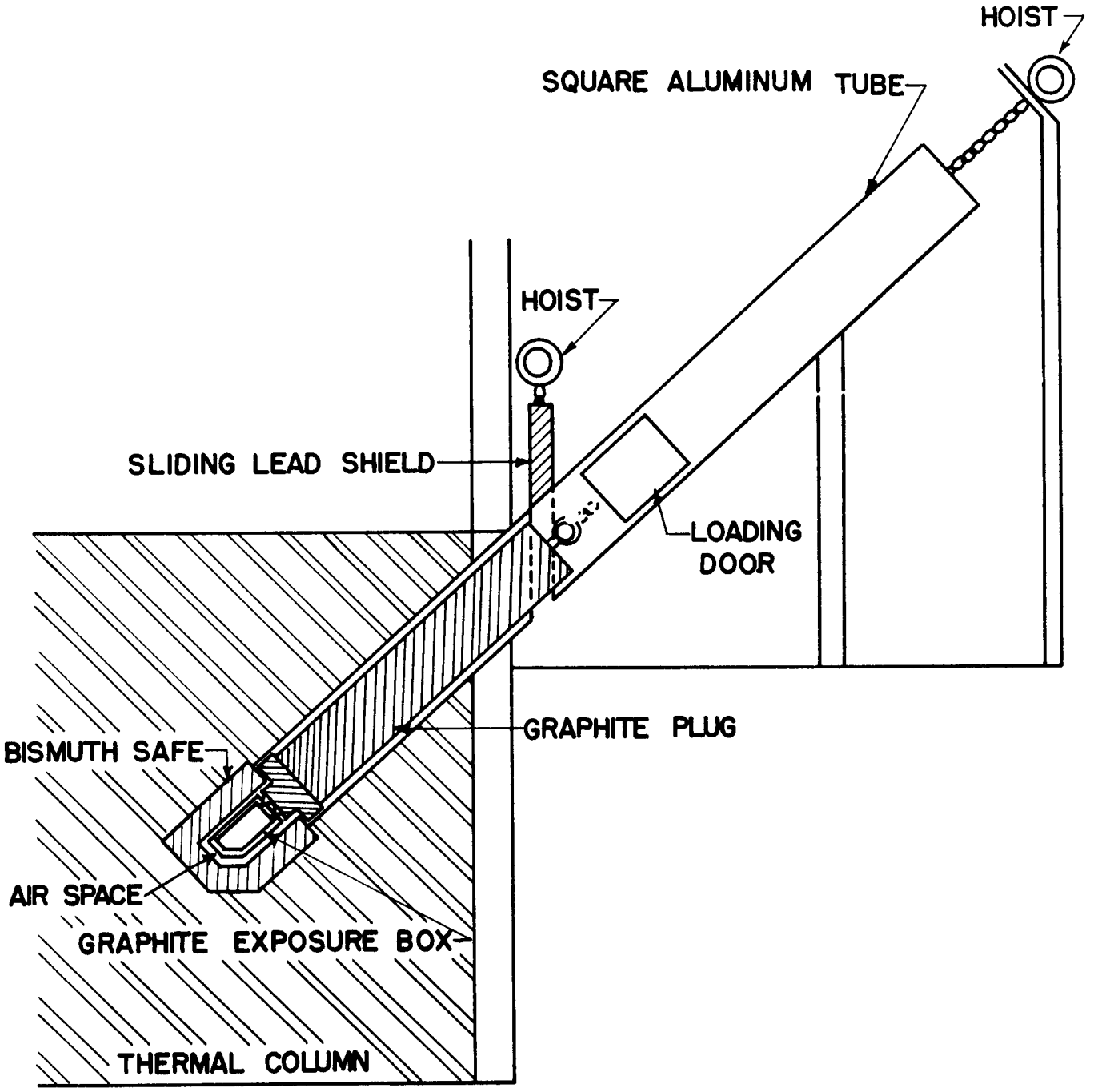

FIG. 1

in the surrounding region are important in evaluating the biological effects of thermal neutrons.

The intensity of capture radiation from the graphite may be approximated to that present in a nonabsorbing cavity in a semi-infinite mass of the material uniformly irradiated with thermal neutrons. Under rather general conditions of absorption and shape the intensity of the γ radiation is not appreciably affected by the presence of the cavity. To a first approximation the absorption of the radiation will be proportional to the density of the absorber, assuming Compton absorption primarily. The energy absorbed per gram will be about the same in graphite and in air and will also be equal to the energy produced, since in a large mass, essentially all energy produced is absorbed. The energy will be

$$E \frac{\text{mev}}{\text{gram sec}} = F \frac{\text{neutrons}}{\text{cm}^2 \text{ sec}} \quad B \frac{\text{mev}}{\text{capture}} \quad \sigma_c \frac{\text{barns}}{\text{atom}} \quad N \frac{\text{atom}}{\text{gram}}$$

Where E = γ-ray energy absorbed

F = neutron flux

B = binding energy of neutron

σ_c = capture cross section in units of 10^{-24} cm^2 of atom of atomic weight A. Values used for σ_c are from (3) unless otherwise indicated.

Thus $E = \dfrac{0.602\ F\ B\ \sigma_c}{A}$.

For biological purposes E is more conveniently expressed in rep per minute or per hour. Here 1 rep is taken to be the dose administered when

$$\frac{83}{1.6 \times 10^{-6} \text{ ergs/mev}} = 52 \times 10^6 \text{ mev}$$

are absorbed per gram of tissue or tissue equivalent material and will be

considered for these purposes to be equivalent to 1 r of γ rays.

$$\text{rep/hr} = \frac{0.602\ F\ B\ \sigma_c\ (3600)}{A(52 \times 10^6)} = 42 \times 10^{-6}\ F\ B\ \sigma_c$$

In graphite σ_c for C^{12} = 0.0045, B = 4.9 mev; σ_c for C^{13} = 0.1 and B = 8.2 mev. The relative abundance of C^{12} and C^{13} are 99 and 1% respectively. Assuming a constant flux F of 10^9 then for $C^{12} \longrightarrow C^{13}$

$$\text{rep/hr} = \frac{42 \times 10^{-6} \times 10^9 \times 4.9 \times 0.0045 \times 0.99}{12}$$

$$= 91$$

and for $C^{13} \longrightarrow C^{14}$,

$$\text{rep/hr} = \frac{42 \times 10^{-6} \times 10^9 \times 8.2 \times 0.1 \times 0.01}{13}$$

$$= 26,$$

total for graphite:117 rep/hr.

The walls of the exposure chamber are several relaxation lengths thick so that the same method can be used to estimate the contribution due to the (n, γ) reaction in bismuth.

The binding energy for Bi^{209} is 4.9 mev (6) and σ_c for the reaction is 0.015 barns. Since Bi^{209} is 100% abundant, then

$$\text{rep/hr} = \frac{42 \times 10^{-6} \times 10^9 \times 4.9 \times 0.015}{209} = 15 \text{ rep/hr.}$$

The total for graphite and bismuth is then ~130 rep/hr not counting attenuation due to the Bi walls. These walls are nearly 8 cm thick so only about $9\frac{1}{2}$% of the incident radiation penetrates, assuming a total linear coefficient of absorption μ for Bi converted from that for lead by a small mass, charge, and density correction (7). Here $\mu = (\tau + \sigma_a + \kappa)$ where, τ is the photoelectric coefficient, σ_a the scattering-absorption coefficient,

and κ the pair production coefficient of absorption, but does not include σ_s, the scattering coefficient of absorption for loss of intensity due to scattering alone, since the radiation is incident on the exposure chamber from all sides.

INSTRUMENTATION

It is difficult to measure accurately the intensity of γ radiation arising from thermal neutron capture because of the effect of the measuring device. To minimize this factor an ion chamber constructed entirely of beryllium and teflon was used in this study. Both of these materials possess low thermal neutron capture cross sections. A diagram of the device is shown in Fig. 2. Employing the Sievert condenser principle it is designed to be charged and read on an ordinary Victoreen electrometer. It was necessary to make the four insulators of minimum dimensions consistent with mechanical strength to reduce "soakage" effects. Because of the small clearance between electrodes the chamber is rather susceptible to leakage. With clean insulators the leakage did not become excessive if care was exercised to keep out particles of dust, particularly during contact with the electrometer. This was largely prevented by discharging the electrometer and blowing out the charging receptacle before inserting the chamber to dissipate the "brush" of charged dust particles normally adhering to the center charging pin. Substitution of fluorothene in place of teflon for the insulators appeared to reduce the leakage somewhat, although this type of chamber has not been thoroughly tested. Fluorothene is comparable to teflon in dielectric properties but is harder and smoother. In exposures of up to 4 minutes no essential difference traceable to differences in insulating material was observed. With its relatively high

Fig. 2

BERYLLIUM-TEFLON CONDENSER SIEVERT TYPE IONIZATION CHAMBER

The gas is allowed to flow through the chamber for a few moments to drive out the air while the chamber is connected to the charging voltage. The chamber is then removed from the electrometer, the plug is screwed in, the nozzle is disconnected, and the port cover twisted to seal in the gas. In the interval between the last two operations equilibrium is established between the gas pressure and that of the outside air.

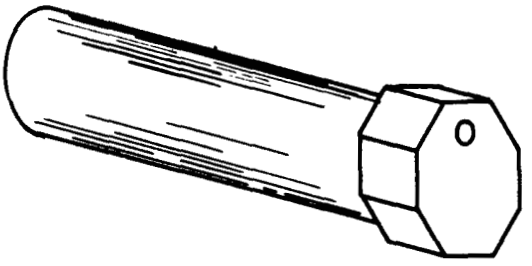

EXTERNAL VIEW

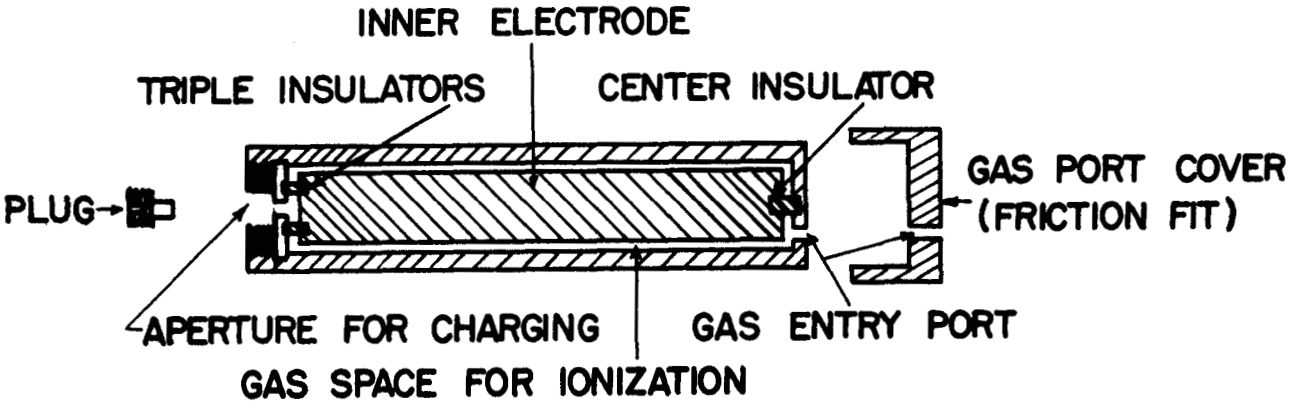

CROSS-SECTIONAL VIEW

FIG. 2

chlorine content, however, fluorothene may be unsatisfactory for long exposures because of the build-up of Cl^{38}, a 38-minute, high energy, γ emitter.

The chamber was designed so that it could be filled with a gas and sealed as shown in Fig. 2 in order to study its response to gases other than air.

The chamber was calibrated against our standard γ-ray thimble ion chamber (8) using the medium intensity Co^{60} source. The calibration curve for various exposure times shown in Fig. 3 indicates that the discharge with time is essentially linear over the full electrometer scale representing a range of from $\sim$150 to 400 volts. Furthermore, for this range of potential the discharge with the chamber air filled was found to be independent of the initial charge placed on the chamber. A closer study of its saturation characteristics was made by exposing the chamber to Co^{60} γ radiation and measuring directly the ion current generated with collecting potentials of from 0-500 volts with a vibrating reed electrometer in a manner similar to that described in our standard thimble chamber studies (8). The saturation curves are shown in Fig 4. It can be seen that from 130-500 volts the response with the chamber filled with either air or oxygen is flat within $\pm$ 2% of the mean. With helium the response is flat up to about 70 volts. Beyond this region the linear relation breaks down completely, probably as a result of multiple ion collisions.

MEASUREMENTS

All exposures in the thermal column were made with the ion chamber inside the graphite box used for the work (1) previously referred to unless otherwise

Fig. 3

CALIBRATION CURVE OF BERYLLIUM ION CHAMBER AGAINST γ-RAY STANDARD THIMBLE ION CHAMBER

Ordinates are units on the 100-r Victoreen electrometer scale; abscissae are r units calculated from the ion current generated in the standard chamber as measured by a vibrating reed electrometer.

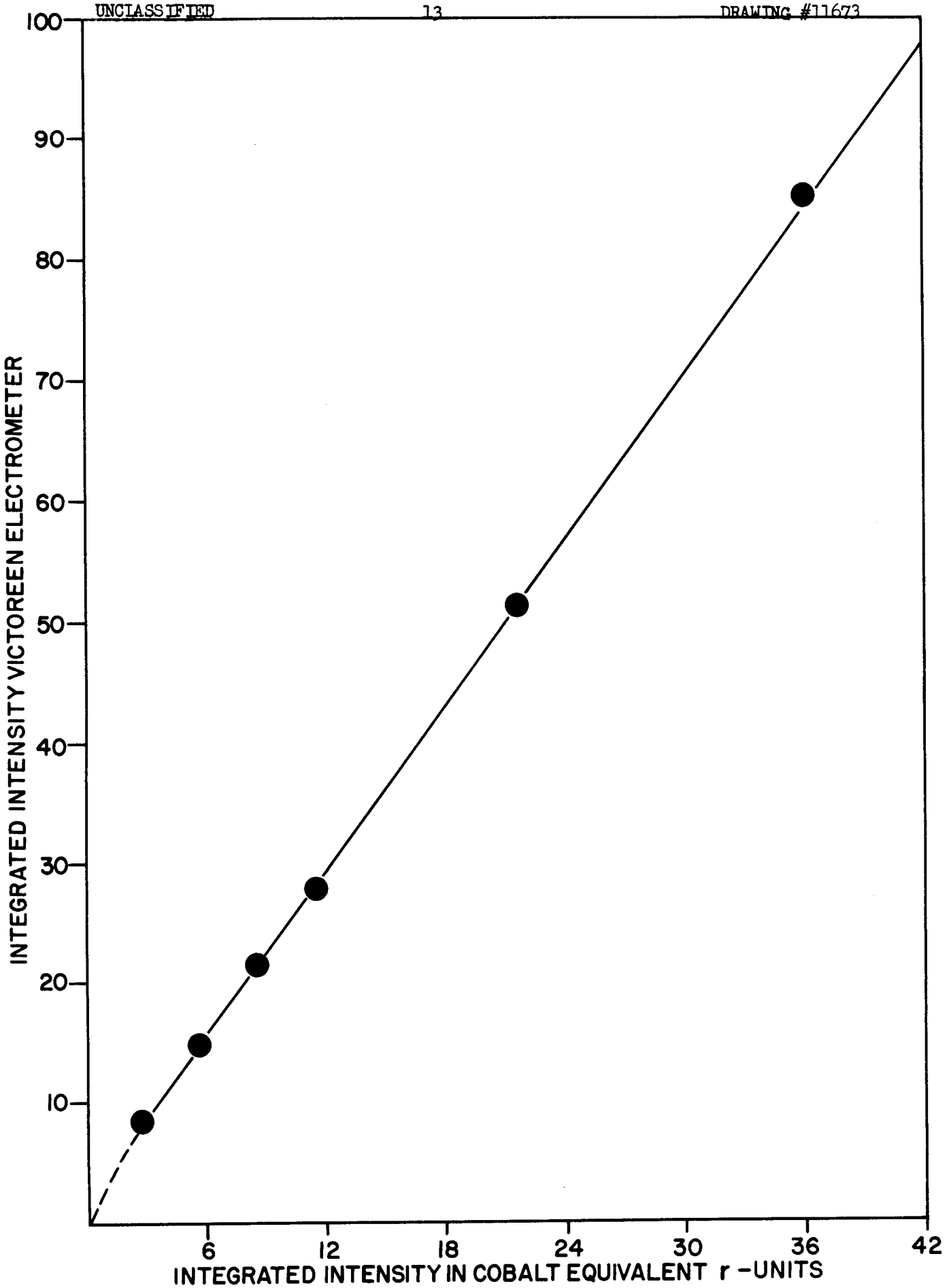
100
90
80
70
60
50
40
30
20
10
INTEGRATED INTENSITY VICTOREEN ELECTROMETER
6
12
18
24
30
36
42
INTEGRATED INTENSITY IN COBALT EQUIVALENT r -UNITS

FIG. 3

Fig. 4

SATURATION CURVES OF ION CURRENT GENERATED IN BERYLLIUM CHAMBER WITH FILLINGS OF VARIOUS GASES

DRAWING #11674

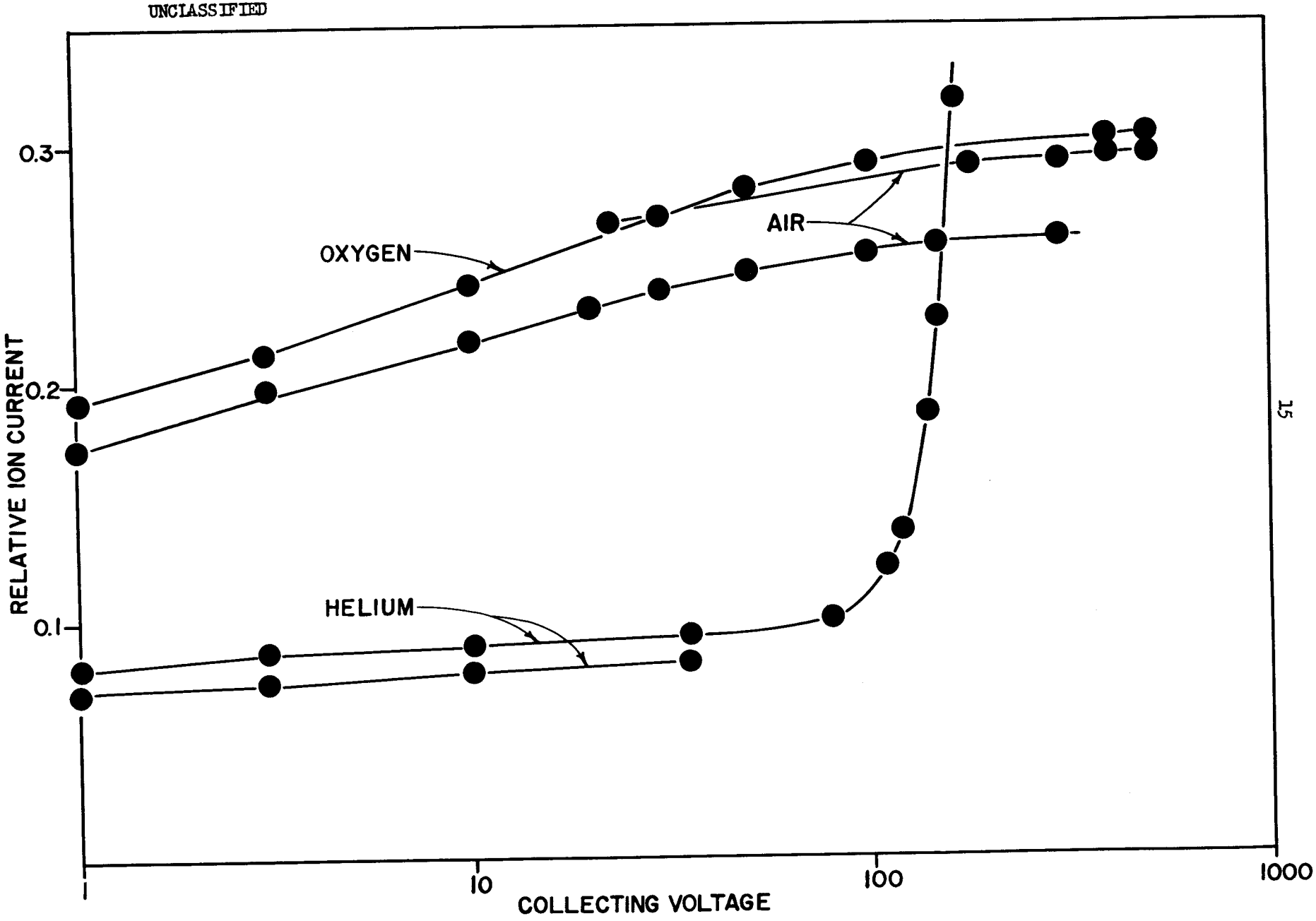

FIG. 4

stated, and the details of the exposure facility and its operation are described therein.

In making ionization measurements a considerable part of the time was spent in loading and unloading procedures. Initially it was found that during these operations γ radiation from the open shaft was intense enough to reduce the working time to a minute or so per day. Additional shielding was introduced by arranging a 4-inch-thick lead slab so that it blocked the opening to the shaft when the graphite plug was pulled out (Fig. 1). The hoisting mechanisms for the lead door and the plug were interconnected electrically so that the shield was automatically lowered into place following withdrawal of the plug. Interlocks were provided to prevent the shield from being accidentally released with the plug in the shaft. The device was quite effective in reducing the radiation hazard as shown in Table I.

TABLE I

Radiation at Loading Position Adjacent to Thermal Column Shaft

	mr/hr
Plug in, gate up	160
Plug out, gate up	8500
Plug out, gate down	1300

Simultaneous measurements of the ionization intensity and the neutron flux were obtained at several positions inside the graphite treatment box as shown in Fig. 5. The flux was measured with indium foils as described by

Fig. 5

POSITIONS FOR INTENSITY AND FLUX MEASUREMENTS

IN GRAPHITE EXPOSURE BOX

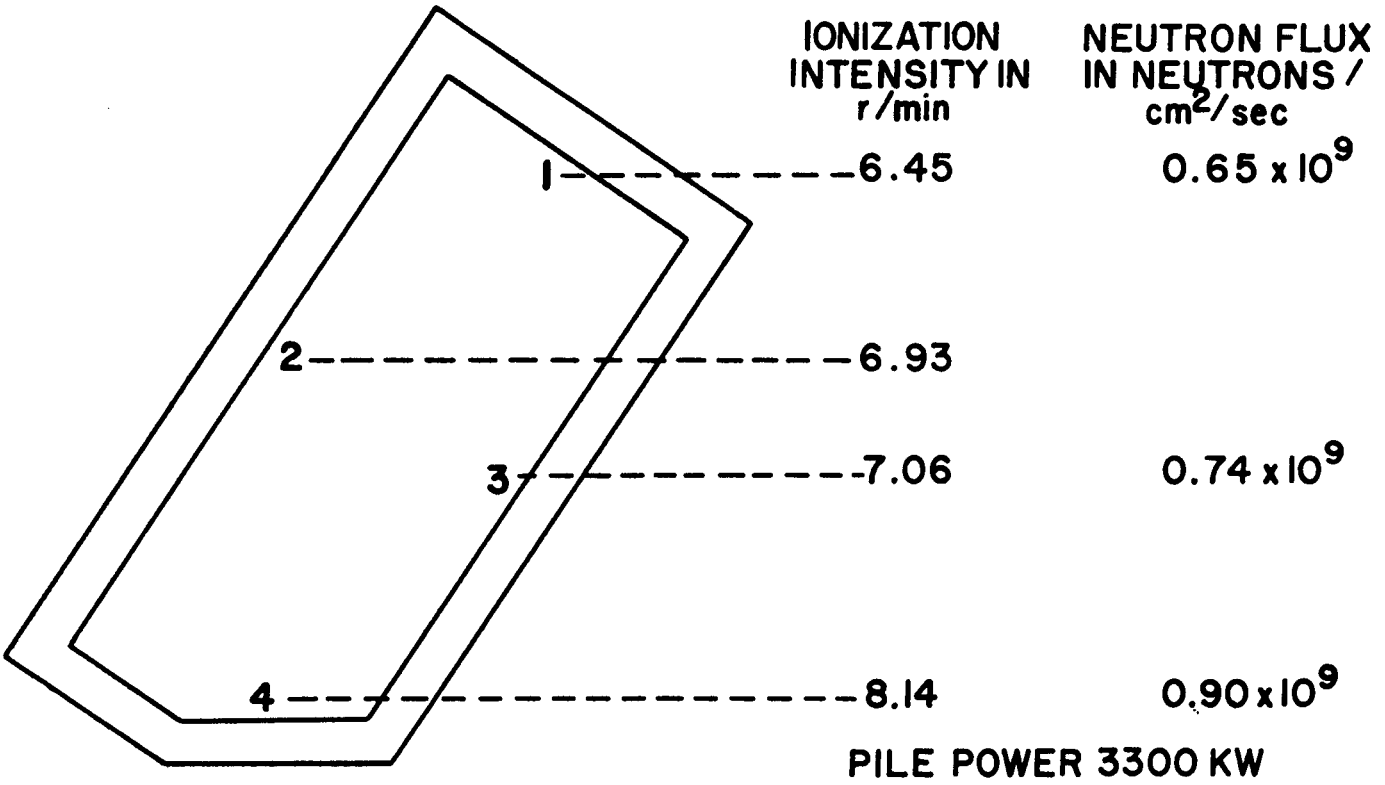
IONIZATION INTENSITY IN r/min
NEUTRON FLUX IN NEUTRONS / cm²/sec
1
6.45
0.65 x 10⁹
2
6.93
3
7.06
0.74 x 10⁹
4
8.14
0.90 x 10⁹
PILE POWER 3300 KW

FIG. 5

Conger and Giles (1). The intensity of the electromagnetic radiation was found to be more or less proportional to the flux and decreased vertically upward (Figs. 5 and 6). The horizontal variation by these and other measurements appeared to be essentially zero. Several weeks later the γ-ray intensity was remeasured, but the flux determinations were not repeated. The results of these measurements are presented in Table II.

TABLE II

Gamma-Ray Intensity and Neutron-Flux Measurements

Inside Graphite Treatment Box

Position in Box	γ-Ray Intensity (r/min)		Flux (n/cm/sec)	Roentgens-per-Unit Flux of 10^9 n/cm/sec	
	July 3	Aug. 25	July 3	July 3	Aug. 25*
(1) Top	6.45	7.43	0.65×10^9	9.9	10.6
(2) Left Center	6.93	8.72	--	--	--
(3) Right Center	7.06	--	0.74×10^9	9.5	--
(4) Floor	8.14	9.77	0.90×10^9	9.0	10.1
Pile Power	3300 kw	3550 kw	3300 kw	3300 kw	3550 kw

* Neutron flux corrected to 3550 kw

In using the exposure facility a total transit time of 33 seconds was required for the material to be carried down the shaft to the exposure position and back. Tests were made to ascertain if the radiation received during the interval was sufficient to affect the intensity of response determined with

different time intervals of exposure. Exposure times of 1 to 5 minutes were used. In this case and in all other experiments the exposure interval extended from the time the box was started down the shaft until the upward movement was begun. Negative results were obtained as indicated in Fig. 6. This finding agreed with that calculated from intensity data for exposures made at several different points along the path of transit as plotted in Fig 7. From the curve it may be deduced that the over-all average intensity while the box was in transit amounted to about three-eighths of the full exposure intensity. On this basis the average intensity measured in the bismuth safe appeared to be little affected by differences in the exposure interval. For example the difference for 2- and 4-minute exposures was about $2\frac{1}{2}\%$. According to Fig. 7 the intensity inside the shaft increases slowly and relatively linearly downward to the entrance into the safe. From this region on into the safe an increasingly fast rise develops in the last few centimeters along the path of transit to the final value with the box in the treatment position and the point of measurement roughly the center of the bismuth chamber.

The small self-generated γ radiation of the beryllium chamber itself was verified by the simultaneous exposure of these two chambers. The response was essentially unaffected by the presence or absence of the second chamber. The present of biological material near the chamber, however, had an appreciable effect. The readings were increased at least 10% with either oxygen or air in the chamber when mice were placed in the box with it.

Nitrogen has a high cross section ($\sim$ 1.6 barns) for the (n,p) reaction with thermal neutrons. The contribution of this process to the observed intensity in the thermal column was investigated by comparing the response with fillings of various gases in the ion chamber. As a control for each gas the chamber was

Fig. 6

PLOT SHOWING INTENSITY AS A FUNCTION OF EXPOSURE INTERNAL

UNCLASSIFIED

DRAWING # 11676

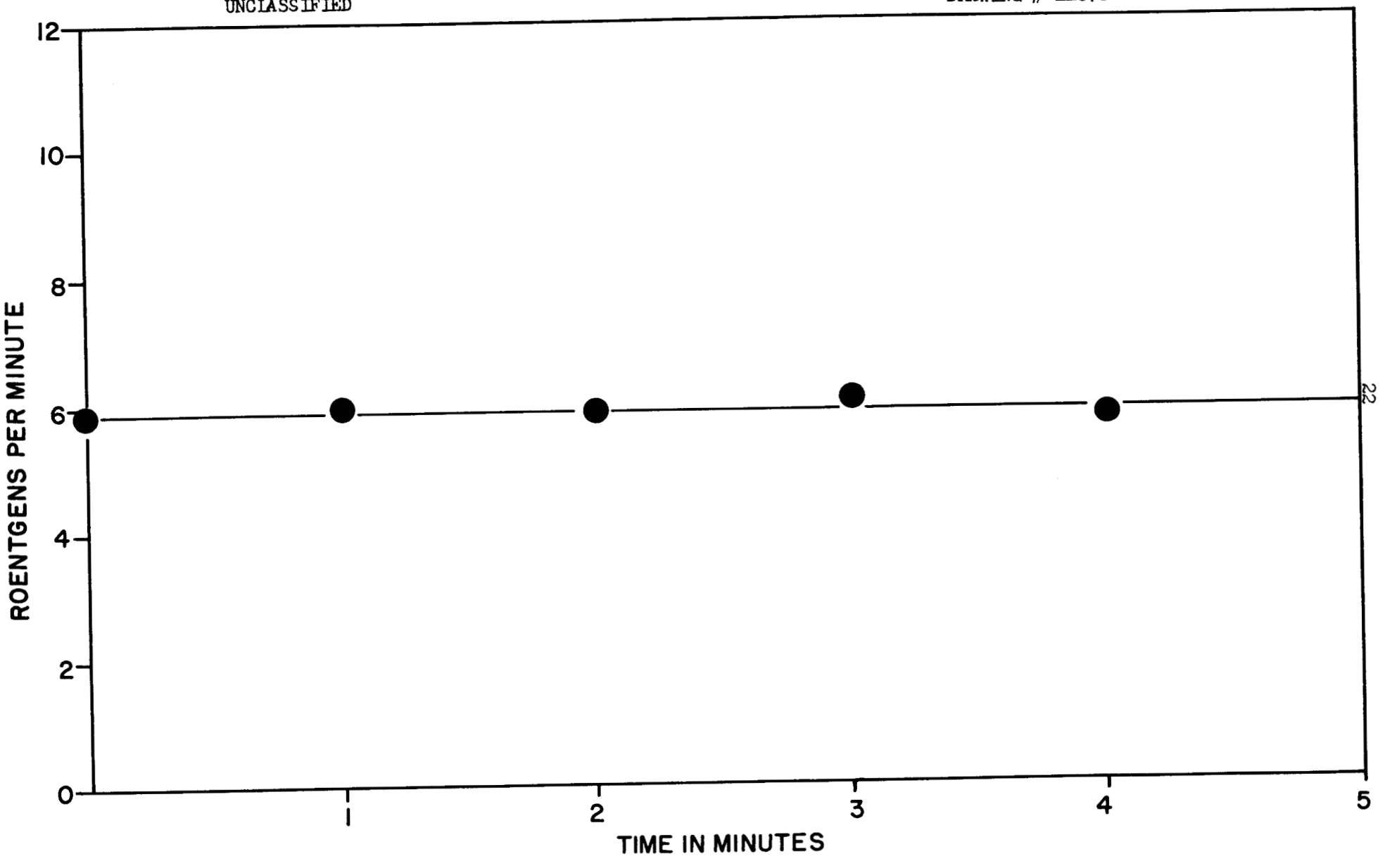

FIG. 6

Fig. 7

VERTICAL VARIATION OF INTENSITY GRADIENT IN ACCESS SHAFT

Distance is measured from the floor position of graphite box with the box inserted to its limit in the bismuth safe. The measurements of γ-ray intensity in the box at various points along the shaft were made with the chamber fixed inside the box. The two dotted curves represent data from Fig. 5 plotted for comparison.

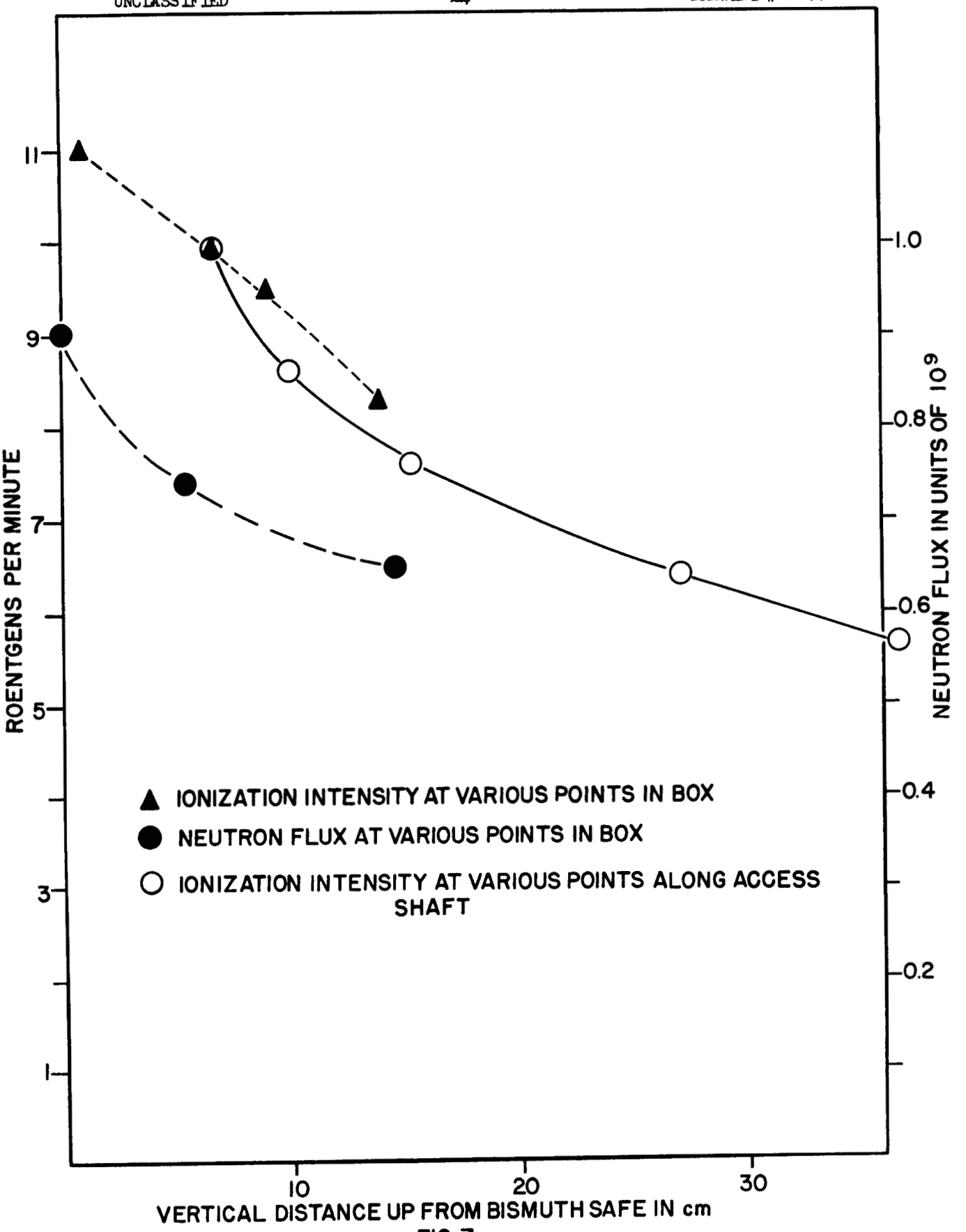
ROENTGENS PER MINUTE
11
9
7
5
3
1
NEUTRON FLUX IN UNITS OF 10^9
1.0
0.8
0.6
0.4
0.2
10
20
30
VERTICAL DISTANCE UP FROM BISMUTH SAFE IN cm
IONIZATION INTENSITY AT VARIOUS POINTS IN BOX
NEUTRON FLUX AT VARIOUS POINTS IN BOX
IONIZATION INTENSITY AT VARIOUS POINTS ALONG ACCESS SHAFT

FIG. 7

exposed to cobalt γ radiation. Comparative results with the thermal column readings corrected to a constant pile power of 4000 kw are shown in Table III.

TABLE III

Relative Effects of Various Gases on the Response of Be Chamber to Radiation in Thermal Column and to Gamma Radiation from a Co^{60} Source

	Position in Graphite Box (Fig. 5)	Average Intensity in roentgens per minute			
		Air	N_2	O_2	He
Thermal Column (Thermal neutrons + gamma rays)	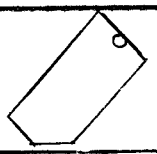 (1)	8.31 (2)	—	—	—
	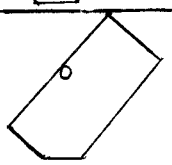 (2)	9.50 (4)	9.55 (2)	8.55 (1)	8.06 (3)
	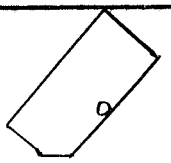 (3)	9.98 (2)	—	—	—
	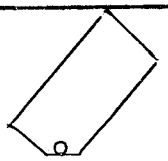 (4)	11.0 (2)	—	10.4 (4)	—
	Chamber 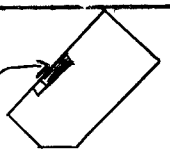	10.1 (2)	—	—	—
Co^{60} gamma rays		10.1 (3)	9.7 (1)	10.3 (1)	4.5 ± 2.0 (7)

Figures in parentheses indicate number of individual observations.

It is seen that the response in air and nitrogen is about the same but averages ~8% low in oxygen. Helium showed anomalous behavior as predicted by the saturation curve (Fig. 4). For comparison, an estimate of the contribution due to the (n,p) reaction may be made by applying a correction to the intensity contributed by a large quantity of gas as calculated, using the method previously described. In this reaction the binding energy is carried off by the proton.

$$ {}^{14}_{7}N + {}^{1}_{0}n \longrightarrow {}^{14}_{6}C + {}^{1}_{1}n + 0.62 \text{ mev} \qquad \sigma_c = 1.6 $$

$$ \text{rep/hr} = \frac{42 \times 10^{-6} \times 10^{9} \times 0.62 \times 1.6}{14} $$

$$ = 3000 \text{ for } N_2 \text{ or } 2400 \text{ for air} $$

To estimate the contribution from the air volume in the chamber the annular cavity may be approximated to a thin radioactive layer sandwiched between two thick layers of inert material. The thickness D of the cavity is about 0.5 mm while the thickness of the basal layer (diameter of the inner electrode) is about 11 mm. The latter is effectively of infinite thickness since the range R in air of 0.62 mev protons is only about 11 mm. The expression (4) for the fraction F of the ionization per ionized particle effective within the cavity when $D < R$ is

$$ F \simeq \frac{D}{R}\left(0.74 - 0.04\frac{D}{R} - 0.33 \ln\frac{D}{R}\right) $$

$$ \simeq 0.045\,(0.74 - 0.0018 + 1.02) $$

$$ \simeq 0.08 $$

The contribution due to the (n,p) reaction then is

$$0.08 \times 2.4 \times 10^3 = 192 \text{ rep/hr or } \sim 3 \text{ rep/min.}$$

This is higher than indicated by the experimental results but in satisfactory agreement considering the assumptions involved. It seems clear then that the (n,p) reaction is ruled out as a major factor responsible for the ionization in the chamber.

It was ascertained experimentally that the intensity of capture radiation from pure bismuth was too low to contribute appreciably to the ionization. The ion chamber was inserted in a hole drilled in a 4 x 4 x 7-cm block of Bi from a lot checked for purity by spectrographic analysis and was exposed inside the graphite box. The intensity was attenuated $\sim$12% by the bismuth.

Exposures were made with the chamber attached directly to the graphite plug without the graphite container to determine the influence of the latter on the intensity. An increase of $\sim$12% was noted, indicating that the primary effect of the graphite walls also was to attenuate radiation from external sources.

To obtain an estimate of the energy of the interfering γ radiation intensity, measurements were made with the chamber enclosed in various thicknesses of lead absorbers inside a box made of boron plastic. In addition to the characteristically large (n,α) cross section due to the B^{10}, the cross section of B^{11} for the (n,γ) reaction is large enough that this contribution must be corrected for in absorption measurements. Each absorber was a solid lead cylinder except for the chamber cavity with walls and base machined to a uniform thickness of from 2 to 36 mm (Fig. 8). Each cylinder, closed by a lid of corresponding thickness, was centered inside the box with spacers of high grade graphite as shown in Fig. 8. A plot of the absorption curve is given in Fig. 9. Limitations in the availability of the thermal column at the time prevented extending the measurements to obtain more

Fig. 8

BORON PLASTIC BOX CONTAINING LEAD ABSORBER AND ION CHAMBER

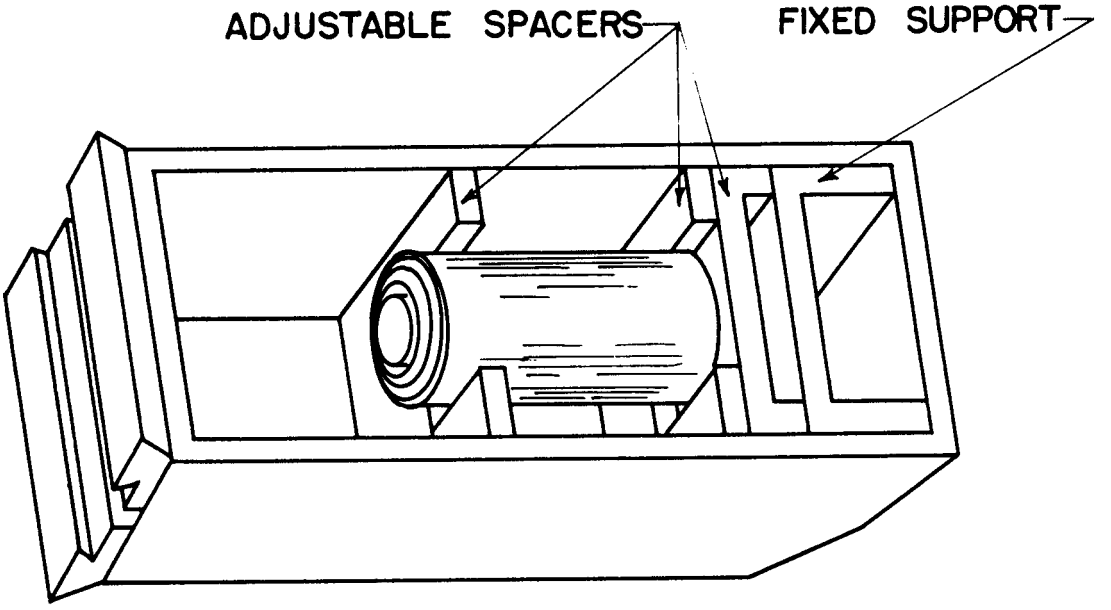

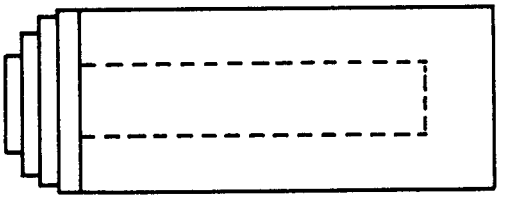

CROSS SECTION THROUGH AN ABSORBER

FIG. 8

Fig. 9

SEMILOG PLOT OF ABSORPTION OF γ RADIATION IN LEAD SURROUNDED BY BORON PLASTIC

The boron γ-ray component subtracted from the main curve is shown on the left.

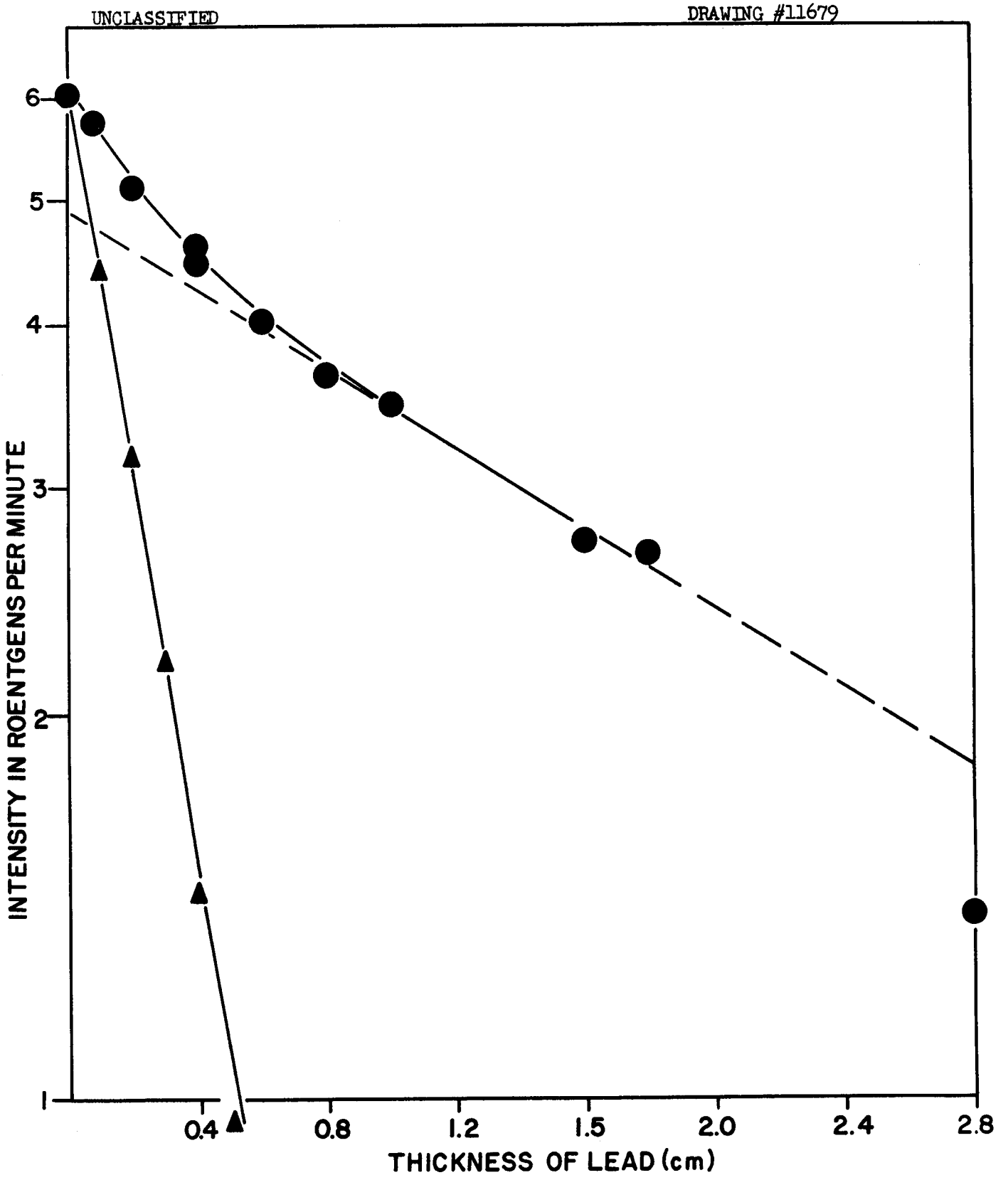
UNCLASSIFIED
DRAWING #11679
INTENSITY IN ROENTGENS PER MINUTE
6
5
4
3
2
1
0.4
0.8
1.2
1.5
2.0
2.4
2.8
THICKNESS OF LEAD (cm)

FIG. 9

points on the graph. The residual slope is similar to that of a curve obtained by Stapleton (5) who, in a similar study with a Victoreen chamber, studied absorption of the radiation in lead up to 2 cm thick.

The absorption curve shows that 2 components of γ radiation were present. The one due to the boron was relatively soft with a coefficient of absorption corresponding roughly to an energy of 0.2 to 0.5 mev. The other residual component showed maximum penetrating ability in lead characteristic of energies of from 2.5 to 5 mev. Extrapolation of this portion of the curve to zero thickness indicates that the intensity at the center of the boron box was about 40% less than the corresponding value inside the graphite container. This is evidently due to the boron acting as a sink of energy which affects the neutron flux not only inside the box but apparently reduces the flux at the source or sources of the γ radiation as well.

DISCUSSION AND CONCLUSIONS

A Sievert type condenser ion chamber constructed of materials with a low σ_c such as Be and teflon has proved effective for the measurement of γ radiation in the presence of thermal neutrons without appreciably altering the flux in the process. Reproducibility of the readings was normally within $\pm 5\%$. For intensities $\gg$ background leakage the agreement should be even better. The method, however, is not adapted as it now stands for routine measurements because of the precautions made necessary by the leakage problem.

Since the chamber is calibrated in terms of equivalent cobalt roentgens, a conversion factor of unknown proportions may be required to convert to absolute r units. The difference, however, is probably $< 20\%$.

Other factors affecting the measurements are primarily associated with the reactor itself. The assumption made as to the relation of flux to power is not precise. Foil measurements taken in the thermal column at various power levels, especially on different days, have occasionally shown discrepancies (2). It is possible that temporary flux changes, such as might occur locally due to insertion or withdrawal of material of high cross section in the pile, would not be detected at the power-measuring device. Since the exposure intervals with our chamber were generally < 4 minutes, such changes occurring at a critical moment could have affected the readings. However, our data taken over a period of days or even weeks has, with few exceptions, reflected a high degree of consistency in the measurements. We conclude, then, that this source of error is relatively unimportant and that the assumption is valid.

As for the increase in the γ-ray intensity per unit flux shown in Table II, operations involving changes in shielding and other procedures were carried out on top of the thermal column by another project group during the approximately 7-weeks interval between the two sets of measurements. A small chance exists that the flux distribution in the bismuth safe could have been thereby altered. Unfortunately, lack of time prevented further investigation of this discrepancy. It is therefore suggested that the flux and the γ-ray intensity be carefully remeasured before further biological exposures are made to determine whether the contaminating radiation is building up.

As for the source of the unwanted γ radiation, the evidence by a process of elimination indicates that at least 90% of the radiation measured by the chamber is originating in the vicinity of the safe, probably from a contaminant of high σ_c in the bismuth. The evidence may be summarized briefly as follows:

1. Both calculated and experimental results indicate that radiation due

to capture processes in the graphite of the column, plus the contribution due to pure bismuth can account for only a negligible portion of the total ionization measured by the chamber.

2. The contribution due to the (n,p) reaction in the cavity of the chamber is appreciable but still $<10\%$ of its total response.

3. The rough parallelism between neutron flux and ionization intensity (Figs. 5 and 7) indicates that the latter is due to capture radiation with absorption characteristics corresponding to energies of several mev, and originating close to the point of measurement.

4. The rapid increase in intensity as the Bi safe is approached and the effect of the boron box in depressing the intensity narrow the location of the source of the radiation to the region of the safe.

SUMMARY

A method has been developed for the measurement of the intensity of γ radiation in the presence of a neutron flux, especially where the use of a measuring device with connecting leads is not feasible. A small ion chamber of the Sievert condenser type constructed of beryllium and teflon is employed which can be charged and exposed and the amount of discharge read on an ordinary Victoreen r meter. The response of the chamber with the latter filled with air and air gases is independent of the charging potential over the range of the electrometer. The presence of the chamber does not depress the neutron flux nor are appreciable amounts of capture γ rays generated by it.

With the aid of this instrument a study was made of the nature of the γ radiation present in the exposure facility located in the thermal column of the Oak Ridge reactor. It was found that the air dose received in the graphite

treatment box amounted to as much as 11 r/minute, depending on the postion of the measuring instrument, and that this intensity was roughly proportional to the neutron flux at that point.

The radiation shows maximum penetration in lead corresponding to an energy of $2\frac{1}{2}$ to 5 mev. It appears to be originating from a source or sources immediately adjacent to the exposure region, probably from a contaminant of high-capture cross section present in the bismuth walls of the facility. There is some evidence to suggest that the contaminating radiation is slowly building up but further tests are necessary before a definite conclusion can be drawn.

Thanks are expressed to Dr. A. D. Conger for his help in obtaining some of the data and to Mr. J. J. Lane and Mr. G. E. Stapleton for assistance in making flux measurements.

BIBLIOGRAPHY

1. Conger, Alan D. and Giles, Norman, H., Jr. The Cytogenetic Effects of Slow Neutrons, Genetics, 35:397-419, 1950, also ORNL-409.
2. Conger, A. D. Personal communication
3. Nuclear Data Circular 499. National Bureau of Standards, 1950.
4. Sheppard, C. W. Radioactivity and Petroleum Genesis. The Bulletin of the American Assn. of Petroleum Geologists, 28: 924-952, 1944.
5. Stapleton, G. E. Personal communication
6. Way, K. Neutron and Proton Binding Energies in the Region of Lead. AECD-2484, 1949.
7. The Science and Engineering of Nuclear Power, Vol. I. Edited by Clark Goodman. Addison Wesley Press, Inc. Cambridge, Mass., 1947.
8. Darden, Edgar B., Jr. and Sheppard, C. W. A Thimble Type Gamma-Ray Dosimeter and the Measurement of the Radiation from Lumped and Distributed Type Sources, ORNL-1002, 1951.