UNCLASSIFIED

ORNL 1044
Instrumentation

ORNL
MASTER COPY

INSTRUMENTATION FOR A PRECISION CREEP TESTING LABORATORY

OAK RIDGE NATIONAL LABORATORY
OPERATED BY
CARBIDE AND CARBON CHEMICALS COMPANY
A DIVISION OF UNION CARBIDE AND CARBON CORPORATION
UCC
POST OFFICE BOX P
OAK RIDGE, TENNESSEE

UNCLASSIFIED

UNCLASSIFIED

ORNL 1044

This document consists of 34 pages

No. 14 of 239 copies, Series A.

Contract No. W-7405, eng 26

INSTRUMENT DEPARTMENT

INSTRUMENTATION FOR A PRECISION CREEP TESTING LABORATORY

by

Joe Lundholm, Jr.

DATE ISSUED

OAK RIDGE NATIONAL LABORATORY
Operated by
CARBIDE AND CARBON CHEMICALS COMPANY
A Division of Union Carbide and Carbon Corporation
Post Office Box P
Oak Ridge, Tennessee

UNCLASSIFIED

INTERNAL DISTRIBUTION

1. G. T. Felbeck (C&CCC)
2-3. Chemistry Library
4. Physics Library
5. Biology Library
6. Health Physics Library
7-8. Metallurgy Library
9-10. Training School Library
11-14. Central Files
15. C. E. Center
16. C. E. Larson
17. S. Cromer (K-25)
18. W. D. Lavers (Y-12)
19. A. M. Weinberg
20. E. H. Taylor
21. E. D. Shipley
22-28. C. S. Harrill
29. F. C. VonderLage
30. R. C. Briant
31. J. A. Swartout
32. S. C. Lind
33. F. L. Steahly
34. A. H. Snell
35. A. Hollaender
36. M. T. Kelley
37. G. H. Clewett
38. K. Z. Morgan
39. J. S. Felton
40. A. S. Householder
41. C. E. Winters
42. D. W. Cardwell
43. E. M. King
44. L. M. Reynolds
45. W. J. Ladniak
46. C. H. Marsh
47. W. H. Brand
48-53. Joe Lundholm, Jr.
54. John H. Frye, Jr.
55-73. W. D. Manly
74-79. R. B. Oliver
80-81. J. B. Frisbie
82. J. C. Wilson
83. M. J. Skinner
84. Central Files (O.P.)

EXTERNAL DISTRIBUTION

85-92. Argonne National Laboratory
93. Armed Forces Special Weapons Project
94-96. Atomic Energy Commission, Washington
97. Battelle Memorial Institute
98. Brush Beryllium Company
99-102. Brookhaven National Laboratory
103. Bureau of Medicine and Surgery
104. Bureau of Ships
105-108. Carbide and Carbon Chemicals Division (K-25 Plant)
109-112. Carbide and Carbon Chemicals Division (Y-12 Plant)
113. Columbia University (J. R. Dunning)
114. Columbia University (G. Failla)
115. Dow Chemical Company
116-120. E. I. du Pont de Nemours and Company
121-126. General Electric, Richland
127-130. Idaho Operations Office
131-132. Iowa State College
133. Kansas City Operations Branch
134. Kellex Corporation
135. Kirtland Air Force Base
136-139. Knolls Atomic Power Laboratory

140-142. Los Alamos Scientific Laboratory
143. Mallinckrodt Chemical Works
144. Massachusetts Institute of Technology (A. Gaudin)
145. Massachusetts Institute of Technology (A. R. Kaufmann)
146-148. Mound Laboratory
149. National Advisory Committee for Aeronautics
150. National Bureau of Standards (R. D. Huntoon)
151. Naval Medical Research Institute
152-153. Naval Radiological Defense Laboratory
154. New Brunswick Laboratory
155-157. New York Operations Office
158-159. North American Aviation, Incorporated
160. Patent Branch, Washington
161. RAND Corporation
162. Sandia Corporation
163. Santa Fe Operations Office
164. Savannah River Operations Office
165-179. Technical Information Service, Oak Ridge
180-181. U. S. Geological Survey (T. B. Nolan)
182-183. U. S. Public Health Service
184. University of California at Los Angeles
185-187. University of California Radiation Laboratory
188-189. University of Rochester
190. University of Washington
191. Western Reserve University
192-195. Westinghouse Electric Corporation
196-199. Atomic Energy Project, Chalk River
200. Chief of Naval Research
201. H. K. Ferguson Company
202. Harshaw Chemical Corporation
203. Isotopes Division (Mr. McCormick)
204-205. Library of Congress, Acquisition Department (J. W. Cormn)
206. National Bureau of Standards (Library)
207. National Research Council, Ottawa
208. Naval Research Laboratory
209. Nevis Cyclotron Laboratories
210-211. Oak Ridge Institute of Nuclear Studies
212-221. United Kingdom Scientific Mission (M. Greenhill)
222. USAF, Air Surgeon (Colonel A. P. Gagge)
223. USAF, Eglin Air Force Base (Technical Library)
224. USAF, Wright-Patterson Air Force Base (Rodney Nudenberg)
225-229. USAF, Wright-Patterson Air Force Base (CADO)
230. U. S. Army, Army Field Forces (Captain James Kerr)
231. U. S. Army, Army Medical Service Graduate School (Colonel W. S. Stone)
232. U. S. Army, Atomic Energy Branch (Lt. Colonel A. W. Betts)
233. U. S. Army, Director of Operations Research (Dr. Ellis Johnson)
234-235. U. S. Army, Office of the Chief Signal Officer (Curtis T. Clayton through Major George C. Hunt)
236-238. U. S. Army, Technical Command (Colonel J. H. Rothschild Attn: Technical Library)
239. UT-AEC Agricultural Research Program (Charles S. Hobbs)

TABLE OF CONTENTS

		PAGE
	ABSTRACT	5
I.	INTRODUCTION	6
II.	DESIGN SPECIFICATIONS OF THE LABORATORY	7
III.	SPECIMEN TEMPERATURE MEASUREMENT	8
IV.	MEASUREMENT OF CREEP RATE	11
V.	SELECTION OF TEMPERATURE CONTROL EQUIPMENT	12
VI.	OPERATION OF "PERCENTAGE ON-TIME" TYPE ELECTRIC PROPORTIONAL CONTROLLER	15
VII.	SELECTION OF CONTROL CONTACTORS	19
VIII.	CONCLUSION	20
IX.	BIBLIOGRAPHY	20

LIST OF FIGURES

FIGURE		PAGE
1.	View of central control panelboard.	22
2.	View of six inert gas atmosphere units.	23
3.	View of high-vacuum furnace units.	24
4.	Disassembled view of vacuum or inert gas atmosphere furnace showing thermocouples wired to the test specimen.	25
5.	Electrical representation of tube furnace.	26
6.	Simple "on-off" controller.	27
7.	Proportional "percentage on-time" type controller.	28
8.	Resistor-heater assembly heating and cooling curves.	29
9.	"Percentage on-time" type controller with proportional and reset action.	30
10.	Complete circuit drawing of "percentage on-time" type controller.	31
11.	View of control slidewire and control switches.	32
12.	Back view of "percentage on-time" type control unit showing the four resistor-heater assemblies.	33

INSTRUMENTATION FOR A PRECISION CREEP TESTING LABORATORY

BY

Joe Lundholm, Jr., Development Engineer
Oak Ridge National Laboratory
Instrument Department

ABSTRACT:

A discussion of the design of a sixteen machine precision creep testing laboratory for determining the rate of permanent deformation that occurs in metals subjected to stress at high temperatures is given. Many special problems were encountered due to the necessity of conducting tests under high-vacuum and inert gas atmosphere, water cooling of specially designed vacuum furnaces, and room contamination hazards.

Electric proportional controllers are used to maintain the desired test specimen temperature by adjusting the "percentage on-time" of the power to the furnace. Long time stability of the temperature to within $+$ or $-$ 1° Centigrade at any value up to 1000° Centigrade is obtained with this system. A detailed analysis of the operation of this system is given.

Long time stability and long periods of uninterrupted operation up to 10,000 hours are necessary to complete certain tests. An emergency power supply is provided in event of power failure.

INSTRUMENTATION FOR A PRECISION CREEP TESTING LABORATORY

Joe Lundholm, Jr.

INTRODUCTION

As engineers continue to design complex equipment to operate at high temperatures and high stresses, the need for accurate creep testing data becomes of greater importance. Creep is defined as the time rate of deformation that occurs when metals are subjected to load or stress well below the yield point, the proportional limit, or the apparent elastic limit at high temperature.[1] A creep testing laboratory is concerned with measuring the creep rate, or the change in length versus time of a special test specimen held at a definite temperature. When one envisages the complexities of modern equipment, it is easy to see that unless the creep rate of the metal parts was known beforehand, close tolerances might disappear in a few hours operation, rendering the equipment useless.

In order to obtain accurate creep testing data, it is necessary that stable operating conditions be maintained for periods of 1000 to 10,000 hours. Furthermore, in the case of certain metals which are being investigated at the present time, it is necessary to test them in either high vacuum or inert gas atmospheres to prevent serious oxidation of the specimen.

Creep is an extremely temperature dependent phenomenon and significant variations in rate of creep can be produced by very small differences in temperature.[2] It has been stated that an increase in the temperature of 6° to 12° Centigrade may double the creep rate in certain metals.[3] Furthermore, anisotropic type of crystal structures in metals may display permanent dimensional changes due to temperature cycling alone. This means that temperature control continues to be one

of the main problems in the design of a creep testing laboratory.

DESIGN SPECIFICATIONS OF THE LABORATORY

The general design specifications of the creep testing laboratory centered around sixteen testing machines, eight of which were to be equipped with vacuum furnaces to operate at 0.1 micron pressure or lower and at temperatures up to 1000° C.; six inert gas atmosphere furnaces to operate at temperatures up to 1000°C.; and two standard tube furnaces to operate up to 1000°C. East testing machine and associated furnace has its own temperature recorder-controller with thermocouple fail-safe protection. All control and recording instruments are mounted in a central control panelboard as shown in Figure 1.

Four thermocouples are wired to the surface of each test specimen, three of which are used for checking the temperature gradient across the test specimen, and one for the temperature controller.

In order to monitor the 64 chromel-alumel thermocouples a 75 point precision indicator is used. A 12 point strip-chart temperature recorder is used to continuously monitor a selected group of the thermocouples. A special plug system is used with flexible leads to enable one to choose any twelve couples in the precision indicator to be recorded. The recorder is used mainly for checking on temperature gradients in the furnaces and to facilitate shunting the furnace if a temperature gradient exists.

Special thermocouple plug panels are installed at each testing machine to facilitate installation of the furnace assembly. They consist of four two pole receptables mounted in a single outlet box cover. All the metal parts of the plugs and receptables are made of thermoelectric material to match that of the thermocouples being used. This tends to eliminate all sources of extraneous thermal emf's.

Small special panels were also fabricated to facilitate the installation and removal of the two vacuum thermocouple gages and the one Philips ion gage for the

vacuum system. All vacuum gages are monitored from the central control panel-board along with the control of the mechanical and VMF-80 oil diffusion pumps.

An emergency automatic starting 20 kilowatt motor-generator set is provided in case of a power failure which would ruin the tests. A power failure would not only cause a serious temperature fluctuation, but failure of the mechanical vacuum pumps could result in cracking the diffusion pump oil and also in oxidation of the test specimen.

Figure 2 shows a view of the six inert gas atmosphere units. Figure 3 shows the high-vacuum furnace units. Figure 4 is a disassembled view of the special furnace which is used for both the high vacuum and inert gas tests. It shows the bellows which allow the pull rods to move as the specimen elongates during the test, the rubber sealing glands for the thermocouples, the thermocouples wired to both a flat strip and a round test specimen, radiation shields on the pull rods, water cooled ends and windowports, and the ten taps on the furnace windings.

SPECIMEN TEMPERATURE MEASUREMENT

The design requirements call for four thermocouples to be wired to the surface of the test specimen as shown in Figure 4. At the present time, specially calibrated 20 gage chromel-alumel thermocouples are being employed.

Three of the thermocouples are for determining the temperature gradient across the length of the test specimen. These thermocouples are wired on the surface at the top, middle, and bottom of the test specimen. It is desired to maintain these three temperatures within 1° Centigrade of each other. The furnaces are all specially wound with spaced windings which provide extra turns at the ends to compensate for the additional end heat losses. This materially aids in providing a uniform temperature over the entire length of the tube furnace. The furnaces are also tapped at ten points for adding external shunts which are used to provide additional control over the temperature gradient when necessary.

Since both the vacuum and inert gas atmosphere furnaces consist of a $2\frac{1}{2}$" x 1/8" wall stainless steel tube placed inside the Alundum tube which holds the windings, it has been found that the temperature gradient across the length of the test specimen is already well within the desired 1° C. limit. This is due to the stainless steel and Alundum tube tending to even out the temperature gradients. Consequently, the external shunts are seldom needed on these furnaces.

The fourth thermocouple is also wired on the surface at the center of the test specimen and is used for control purposes only. It is connected to one of the sixteen temperature recorder-controllers. This also provides continuous monitoring of the specimen temperature. Since the electric proportional controllers are equipped with automatic reset or droop correction the specimen temperature should stay at the set value for long periods of time, barring a shift in thermocouple calibration, thermocouple failure, or instrument failure.

The selection of the proper type of thermocouple was given considerable thought. Upon disassembling the vacuum furnace after an initial test run using chromel-alumel thermocouples, all the parts showed a coating of metal. This was the result of high temperature (800° C.) and high vacuum (0.1 micron) which allowed various alloy materials to literally "boil off" or vaporize out of the metal parts in the furnace, possibly including the thermocouple materials.

Subsequent tests with both chromel and alumel spirals in a partially enclosed quartz tube placed inside the furnace at various temperatures have shown that aluminum may vaporize from the alumel wire at around 750° to 800° C. and it appears that manganese is evaporating from the chromel wire. In the case of chromel the quartz tube was clear except at each end where the tube entered the cooler zone of the furnace and at that point a ring of manganese colored material was deposited. In the case of alumel the quartz tube had a heavy plating of what was thought to be aluminum on the inside. In both cases, the amount of deposited metal was too small to obtain a definite chemical analysis of its composition.

To determine if this was affecting the calibration of the chromel-alumel thermocouples, tests were conducted with iron-constantan, chromel-alumel, and platinum 10% rhodium-platinum thermocouples wired to the surface of the specimen and a chromel-alumel thermocouple placed in a stainless steel well exposed to the open atmosphere. Tests of 100 hours each at five different temperatures up to 800° C. showed no definite change in calibration of any of the various thermocouples. It appears that one type of thermocouple is as good as the other.

Recent tests have shown that the alloy constituents of the stainless steel tube of the vacuum furnace itself will vaporize and coat the quartz tube without any thermoelectric materials in the furnace at temperatures above 800° C. Even this does not appear to be affecting the temperature-emf properties of the thermocouples.

Although no shift in the calibration of the iron-constantan thermocouples was found, it appears that the manganese in the constantan and other controlled impurities in the iron wire could likewise vaporize under the test conditions. Furthermore, platinum thermocouples are notorious for their tendency to alloy with extraneous metallic vapors, thereby considerably changing their calibration. These phenomena might be particularly bad in a high-vacuum atmosphere although present tests have shown no definite shift in calibration.

Tests are being continued to see if any definite change in the calibration of the three types of thermocouples is occuring and to what degree.

At the present, chromel-alumel thermocouples are being used and are serving satisfactorily. Tests indicate that the variation in calibration of these couples is in the order of 2° to 3° C. over long periods of time. This is a matter of a shift in the calibration and not the initial absolute accuracy.

To achieve initial absolute accuracy of the thermocouples, it is necessary to compare the calibration of the wire being used with known accuracy material.

For these checks, special 8 gage chromel-alumel wire pairs as supplied by the National Bureau of Standards are used. This wire has a stated accuracy of + or - 2 degree Centigrade and the errors in our calibration amount to approximately one degree. Thus, the initial absolute accuracy of the chromel-alumel thermocouple is probably + or - 2.5° C. for temperatures up to 1000° C. For greater accuracy below 500° C. it would be possible to calibrate the couples with a platinum resistance thermometer. This is considered unnecessary at the present time as it is felt that other errors such as the shift in calibration during long time tests are in the order of a few degrees Centigrade.

MEASUREMENT OF CREEP RATE

At the present time, the optical method of measuring the extension of the specimen is being used. With this method, a measuring microscope with a bifilar eyepiece is employed to view specially marked platinum strips which are wired to the test specimen. In order to view the test specimen with the platinum strips, it is necessary to provide two viewing windows placed on diametrically opposite sides of the furnace. It is often desired to view two sets of strips from opposite sides of the specimen to determine if the load on the specimen is producing straight-line motion and not bending the specimen.

With this method, and the existing microscope, a sensitivity of 50 microinches is being obtained. With the three inch long specimen, this amounts to 17 microinches per inch.

A rule of thumb is that the maximum sensitivity of the creep measuring apparatus be comparable to the magnitude of the thermal expansion effects produced by temperature variations of the specimen. This effect in many materials amounts to 10 to 20 microinches per inch per degree Centigrade.

A development program is being initiated to design a recording extensometer to eliminate the necessity of having an operator spend considerable time each day to "read" the platinum strips. This is also desirous in that it would give

additional information on creep phenomenon such as momentary high rates of creep. It also would allow one to correlate sudden changes in creep rates with temperature flucuations, etc. It appears that this is a rather formidable project considering the fact that both extreme sensitivity and long time stability are needed. A unit utilizing strain gages, linear differential transformers, or variable capacitance between two plates or concentric cylinders is being considered. The problem is further complicated in this case due to the necessity of either inserting the equipment inside a cooler zone of the vacuum furnace, or transmitting the mechanical motion through bellows to the outside of the furnace. The latter method is probably impractical because of the accuracy of measurement desired.

SELECTION OF TEMPERATURE CONTROL EQUIPMENT

The initial design specification on quality of temperature control were, of course, dependent on testing available industrial controllers to determine their capabilities. Initial tests and subsequent rechecks have shown this to be in the order of + or - 1°C. over long periods of time with an instrument span of 0 to 1000° C using chromel-alumel thermocouples.[4]

Due to the design of the special vacuum and inert gas atmosphere furnaces, which require water-cooling of the furnace ends to protect "O" ring seals, bellows, thermocouple entrance seals, etc., it was desired that the control thermocouple be wired directly to the surface of the test specimen rather than being placed near the windings. In any case, placing the control thermocouple on the specimen is better, since the temperature of the windings are never the same as the specimen; thus, requiring a correction factor in determining the set point. Obviously, this will necessitate the use of a proportional controller to eliminate the hunting or cycling produced by a simple "On-Off" controller.

The lags to be expected in the measurement of temperature of the specimen in the vacuum were considered; especially, since the only means of transferring heat in a vacuum is by radiation. Furthermore, it was necessary to not only transfer

the heat through an Alundum tube but through a stainless steel tube which is the actual vacuum chamber. Unfortunately, stainless steel has both a high specific heat and a low thermal conductivity.

Tests showed that at temperatures above 500° C the lags were quite small, but as the control temperature approached 200° C, the lags were of great enough magnitude to approach the limits of adjustment of the controller. Specifically, the reset rate or rate of droop correction was too fast with the controllers which were used. In a few cases, it has been necessary to remove the automatic reset and adjust it manually. A general statement may be made that higher temperatures are more easily controlled due to better heat transfer and the resultant reduction in time lags in the system.

The result of this study showed that there existed three principal types of proportional controllers equipped with automatic reset or droop correction capable of controlling electric furnaces. These are as follows:

1. "Percentage on-time" type known by such names as Duration Adjusting Type, Electropulse, Putmo, etc.
2. Electric or pneumatic actuated Variac or Powerstat unit.
3. Saturable reactor type.

The accuracy of the temperature measurement would be identical in all cases if a similar type recorder-controller with calibrated thermocouples was used.

All three types of controllers were tested. In all cases, strip-chart recorder-controllers were used in order to achieve maximum readability of the record.

The "percentage on-time" type controller achieves control by pulsing the power to the furnace achieving proportional control by varying the "percentage on-time". It requires only a standard power contactor or relay as the control element. It is available as a completely electric type controller. Results showed control to + or - 1° C. with an instrument span of 0 to 1000° C.

The electric driven or pneumatic actuated Variac or Powerstat control system achieves control by adjusting the furnace input voltage to the value necessary to maintain the desired temperature. Both the electric and pneumatic system were tested and the control results obtained were identical. The cost of the electric type control unit with strip-chart recorder, control unit, electric drive unit, and Variac is practically the same as the strip-chart pneumatic controller with a commercially available pneumatic actuated Variac or Powerstat unit.

One drawback to the latter system is the step-action of the Variac or Powerstat caused by the convolutions in their windings. This control element has a minimum voltage change of .25 to .5 volt depending on the type. The second drawback is the non-linearity of the control unit when one considers the power input versus position of the Variac. This results because power is proportional to the square of the voltage. This is not a serious disadvantage but should at least be considered. While the control is almost as good as that obtained with the "percentage on-time" type, it appears to be continually cycling over at least + or - 1° C. as the Variac hunts between adjacent convolutions. The "percentage on-time" type merely displays long time drifts of the same magnitude. Since a minimum of cycling is desired, this would tend to rule out the Variac unit in this case.

The saturable reactor unit achieves control by a varying impedance (the saturable reactor) which is placed in series with the furnace windings. The impedance of the reactor is varied by changing the magnetic saturation of the iron circuit in the reactor. By controlling a few watts of d-c saturating current, a few kilowatts of a-c power may be controlled. The complete unit consisting of the recorder-controller, electric reset or droop correction unit, Reactrol panel for supplying the d-c saturating current and the appropriate saturable reactor is considerably more complex than the other two types of controllers. It has the disadvantage of requiring that the saturable reactor be correctly matched to the particular furnace. It is also considerably more costly. The control results

obtained with the unit are comparable to that obtained with the "percentage on-time" type.

The "percentage on-time" type controller was chosen after considering the factors of quality of control, dependability, and cost. As mentioned previously, closeness of control was as good or better than the other two types. The only critical item in the control unit is one vacuum tube. Furthermore, there is no air supply problem. On a cost comparison based on the use of strip chart recorders, the Variac type is 25% more costly than the "percentage on-time" type and the saturable reactor type is 50% more costly.

It should be stated that there are two types of furnaces for which the "percentage on-time" type of unit is not particularly well suited. One is a very small furnace with little insulation which means that the effective time constant of the furnace is very small. This furnace cannot tolerate the on-off periods of this type controller and one of the other types which provide continuous power input should be used. The second type of furnace is the very large type where it is not advisable to be continually loading and unloading the building distribution system which might cause trouble to other research projects. In this case, the saturable reactor type is best suited for handling these large loads.

OPERATION OF "PERCENTAGE ON-TIME" TYPE ELECTRIC PROPORTIONAL CONTROLLER

The "percentage on-time" type of control unit achieves proportional control by pulsing the power to the furnace, say 5 seconds "on" and 5 seconds "off" which is 50% "on-time", or 6 seconds "on" and 4 seconds "off" which represents 60% "on-time".

A furnace can be represented in electrical terms as shown in Figure 4 where C_1 represents the thermal mass (mass x specific heat) or capacity of the windings and the Alundum tube which holds the windings, C_2 the thermal mass of the specimen or furnace charge, R_2 the resistance to the transfer of heat to the specimen,

R_3 and R_4 the heat losses through the insulation from the windings and through the ends of the furnace from the specimen.

With reference to Figure 5, it can be seen that this represents a filter network for obtaining smooth d-c from half-or full-wave rectification. It is also known as a second-order system. Furthermore, the effective time-constant of the usual furnace is such that one can tolerate on and off periods of five seconds to as much as sixty seconds without seeing a fluctuation of temperature at the specimen.

This is possible only with at least a second or higher order system. With a first order system, which would be equivalent to placing the thermocouple directly on the windings, it would be impossible to eliminate the effects of on-off action. Consequently, this system works best with the control thermocouple placed directly on the test specimen.

In order to explain the operation of this electric control unit as to how proportional action, droop correction, and impulse rate are obtained, it will best be seen by analyzing a series of three drawings.

With reference to Figure 6, it is obvious that this is an ordinary Wheatstone bridge circuit, fed with an a-c source, and using an a-c detector which will only actuate the contactor if the bridge is unbalanced in the correct direction. In other words the a-c detector is phase-sensitive. A control slidewire is used to provide the electrical signal indicating whether the temperature departure is above or below the set point and the extent of the departure. The control slidewire is attached to the same shaft as the measuring circuit slidewire. The resistors are all manganin (zero-temperature coefficient wire). This unit will provide ordinary, non-proportional on-off control and the temperature will cycle (overshoot and undershoot) as is characteristic of any on-off controller. The main thing to notice is that if the temperature drops, the bridge is unbalanced due to the contact shifting on the control slidewire and unbalancing the bridge in the correct direction to

actuate the power contactor. When the temperature reaches the correct value, and not until then, will the contactor be opened. Naturally, the stored heat in the windings will cause the temperature of the specimen to continue to rise above the desired value.

The next figure, Figure 7, is the same bridge circuit but with resistor R_3 replaced with a nickel resistor wound intimately with a small five watt heater. The heater is energized whenever the power is applied to the furnace. The cooling and heating of the nickel resistor will be sufficient to unbalance and balance the Wheatstone bridge. To show how this bridge, Figure 7, provides proportional control only, it is necessary to keep in mind the exponential heating and cooling curves of the resistor-heater assembly which is shown in Figure 8. Figure 8 shows how the temperature at which R_3 operates determines the "percentage on-time". Assume that the furnace is operating with 50% on-time at the set point when a drop in line voltage causes the temperature of the furnace to fall. This will cause leg R_1 of the bridge to have more resistance than R_2, unbalancing the bridge in the direction to actuate the furnace contactor. The furnace will continue to heat until the resistor-heater unit R_3 is heated to have sufficient resistance to balance the bridge $\left(\frac{R_1}{R_2} = \frac{R_3}{R_4}\right)$. To maintain this higher temperature, in R_3, a greater "percentage on-time" will be required, say 60%. By varying the proportional band adjustment which consists of a variable shunt on the control slide-wire, any percentage proportional band may be obtained. As is the case with a proportional controller, the temperature will droop or be displaced from the set point due to a sustained load change or drop in line voltage. This may be corrected by making resistor R_4 variable, thus, providing manual droop correction or reset. This may be seen by the fact that as R_4 is increased, R_3 must heat to an even higher temperature to maintain the bridge in balance. Thus, by slowing manually increasing the "percentage on-time" of the power to the furnace, the temperature will eventually be brought back to the set point.

In Figure 9, R_4 is now also made of nickel with a five watt heater and provides automatic droop correction. This resistor-heater assembly (R_4) is of the same physical dimension as R_3 but wound on a solid steel slug instead of a thin-walled, hollow brass tube as is R_3.

The operation of the two resistor-heater units is equivalent to the two bellows used in a pneumatic controller to achieve automatic reset, where one tends to either "chase" the other up or down to increase or decrease the value of the controlled variable.

If a line voltage change causes the temperature of the test specimen to drop, the bridge is unbalanced $\left(\frac{R_1}{R_2} > 1\right)$, the furnace contactors is actuated, and R_3 will increase in value to balance the bridge. $\left(\frac{R_1}{R_2} = \frac{R_3}{R_4}\right)$ The unit will now pulse at some greater "percentage on-time". Due to the steel core, R_4 will heat very slowly but as its temperature rises, R_3 must continue to stay ahead to maintain the ratio $\left(\frac{R_3}{R_4} > 1\right)$. The continuing increase in the "percentage on-time" will continue until the specimen temperature is again at the set point.

The mass of R_4 unit determines the reset rate, or how fast it is capable of "chasing" R_3. Since it is difficult to vary the mass, it is more simple to build a bridge with two sets of resistor-heater assemblies, in one case R_4 has a solid steel core and the other one, R_4 is a hollow-brass tube. Two ganged rheostats allow one to obtain various reset rates by utilizing a weighted average of the two units. Adjustment of proportional band is accomplished by varying the shunt on the control slidewire. Impulse rate is adjusted by varying the sensitivity of the a-c electronic phase-sensitive amplifier. Figure 10 is a schematic drawing of the complete unit. Figure 11 shows the 100 ohm control slidewire and limit switches of the electric controller. Figure 12 is a back-view of the electric control unit showing the four resistor-heater assemblies. PF and DF are the proportional and droop units associated with fast droop and PS and DS are the units used for the slow rate of droop correction.

Control switches L and L_1 are for two purposes. One, to apply full power to the furnace should the temperature drop one-half inch below the set point. Second, to maintain full power on heat-up till the temperature is within one-quarter inch of the set-point. During the long heating period of the furnace, the resistor-heater assemblies of the control bridge will have reached their limit temperature. Consequently, upon initially arriving at the set point the unit would operate with 100% on-time. Since in many cases this is not desired, it would be advantageous if one could select the initial "percentage on-time". This is accomplished by limiting the maximum temperature of the heavy base droop correction resistor-heater assemblies by inserting a rheostat in series with the heaters calibrated in percentage on-time. The rheostat is shorted out after the temperature arrives within $\frac{1}{4}$" of the set point by L and L_1 contacts. After that, the droop correction control action will adjust the temperature of these units to the value which will provide the correct percentage on-time to maintain the temperature at the set point. Contact L_2 is a safety contact set to open one-quarter inch above the set point. This opens both the control contactor and a second safety contactor in case the control contactor is stuck.

SELECTION OF CONTROL CONTACTORS

In the case of the "percentage on-time" type of temperature controller, the final control element is a standard contactor or relay capable of handling the heavy furnace current. In all cases, two contactors wired in series are used as a safety measure. With the use of the over-temperature safety contact L_2, the controller will provide non-proportional on-off control at a point $\frac{1}{4}$" above the set point.

All dual contactor units in use at the present time are of the enclosed mercury type rated at 30 amperes, 115 volts, 60 cycles and 20 amperes, 230 volts, 60 cycles.

No failures have occured in the sixteen sets installed in the creep laboratory, although out of a number of additional units installed in the Laboratory, a considerable number of failures have occurred. The manufacturer has assured us that this was the result of a bad lot in manufacturing.

It has been found that the mercury type relays are desirable due to their silent operation.

CONCLUSION

The creep testing laboratory has been in operation a sufficient length of time to show that the design, as discussed in this paper, has been a sound one. No trouble has been experienced with the instrumentation as far as component failures or the inability to measure or control to the desired limits. It has been necessary to resort to manual reset or droop correction at low temperatures in the vacuum furnaces due to the long time lags. The resultant temperature control still appears to be within 1° C. No conclusive data is yet available that would show a definite change in the calibration of the chromel-alumel thermocouples, even though they are working at both high temperature and high vacuum.

BIBLOIGRAPHY

(1) "Creep Tests", Kanter, J. J., Metals Handbook, The American Society for Metals, Cleveland, 1948 edition, page 115.

(2) "Metallic Creep", Sully, A.H., Interscience Publishers Inc., New York, First Edition, 1949, page 12.

(3) Temperature, Its Measurement and Control in Science and Industry, Reinhold Publishing Corporation, New York, page 963.

(4) "Babcock & Wilcox Company Installs Laboratory for Creep and Stress Rupture Studies", Industrial Heating, Volume 17, June, 1950, Pages 988 - 994.

UNCLASSIFIED
PHOTO 8359

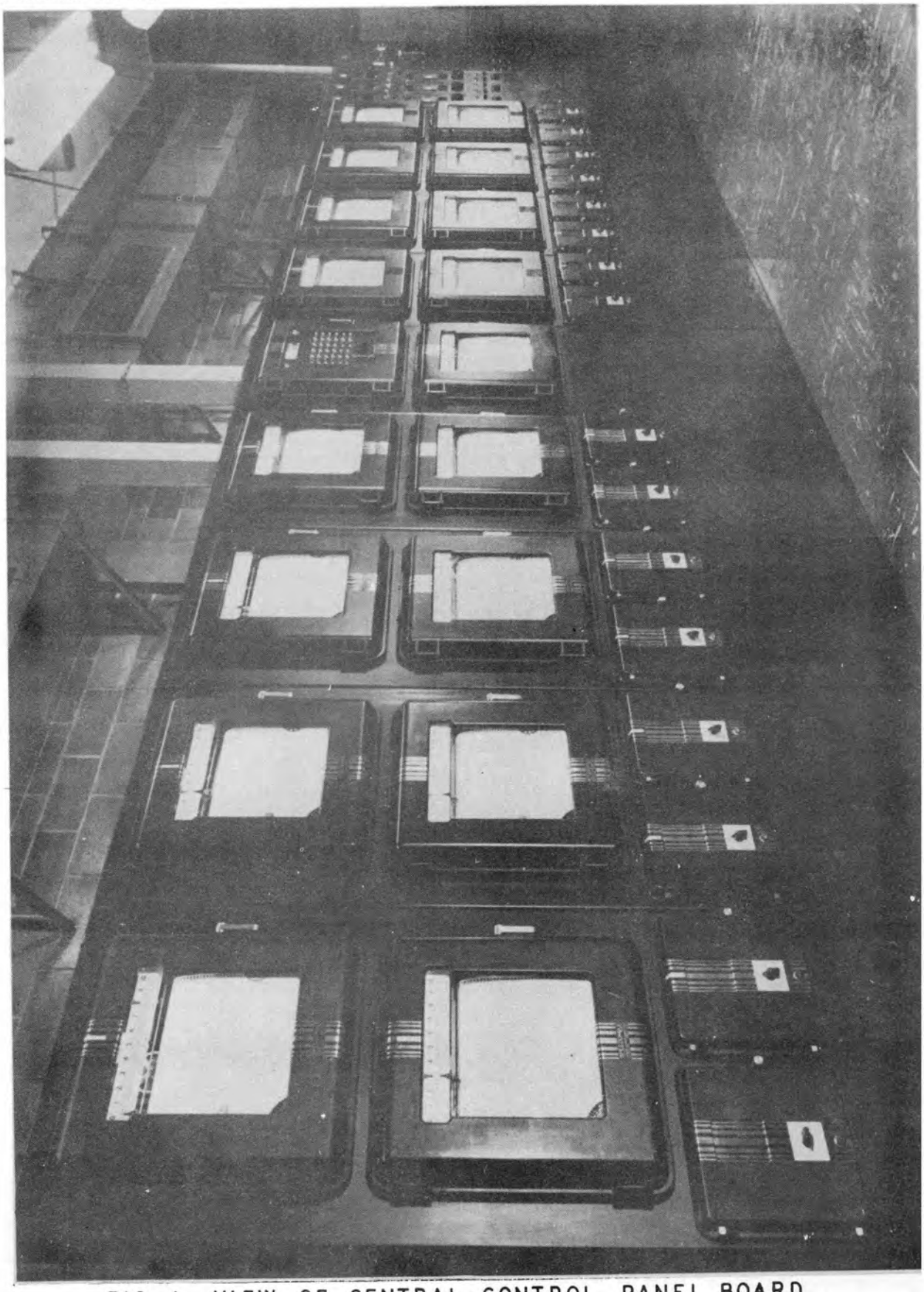

FIG. 1 VIEW OF CENTRAL CONTROL PANEL BOARD

UNCLASSIFIED
PHOTO 8358

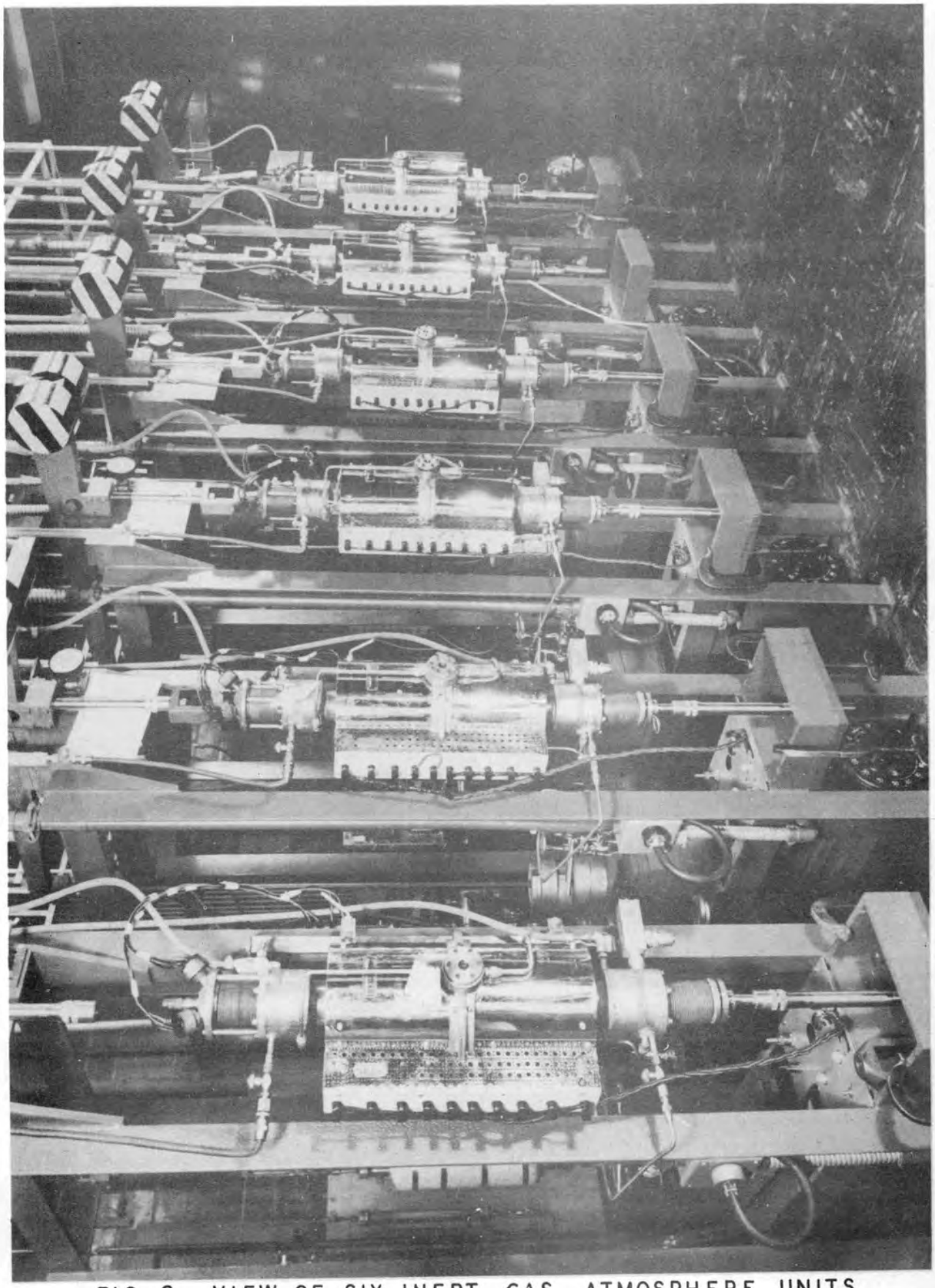

FIG. 2 VIEW OF SIX INERT GAS ATMOSPHERE UNITS

UNCLASSIFIED
PHOTO 8357

FIG. 3 VIEW OF HIGH-VACUUM FURNACE UNITS

UNCLASSIFIED
PHOTO Y-3981

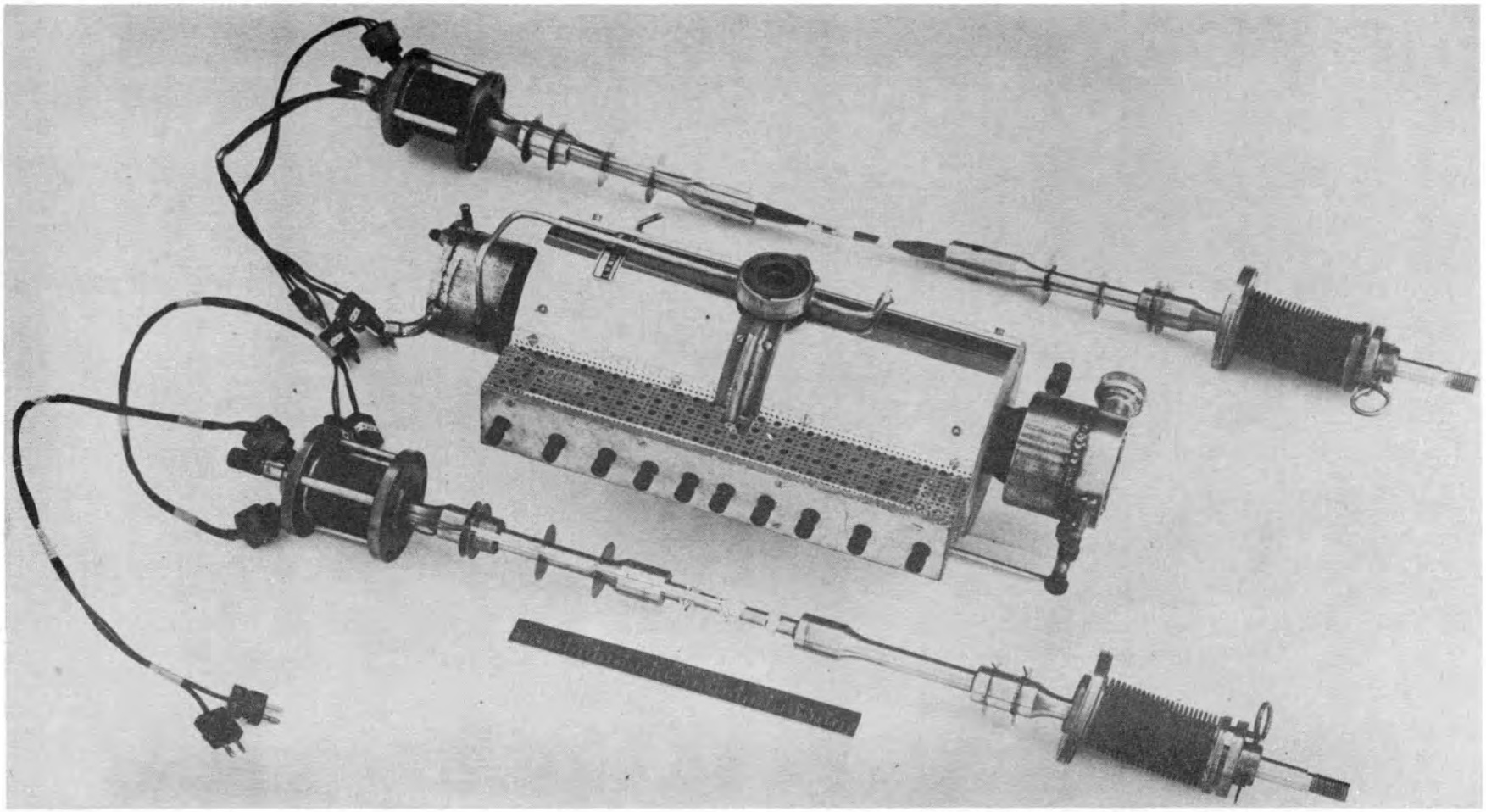

FIG. 4 DISASSEMBLED VIEW OF VACUUM AND INERT GAS ATMOSPHERE FURNACE SHOWING THERMOCOUPLES WIRED TO TEST SPECIMEN

UNCLASSIFIED
DWG. 11843

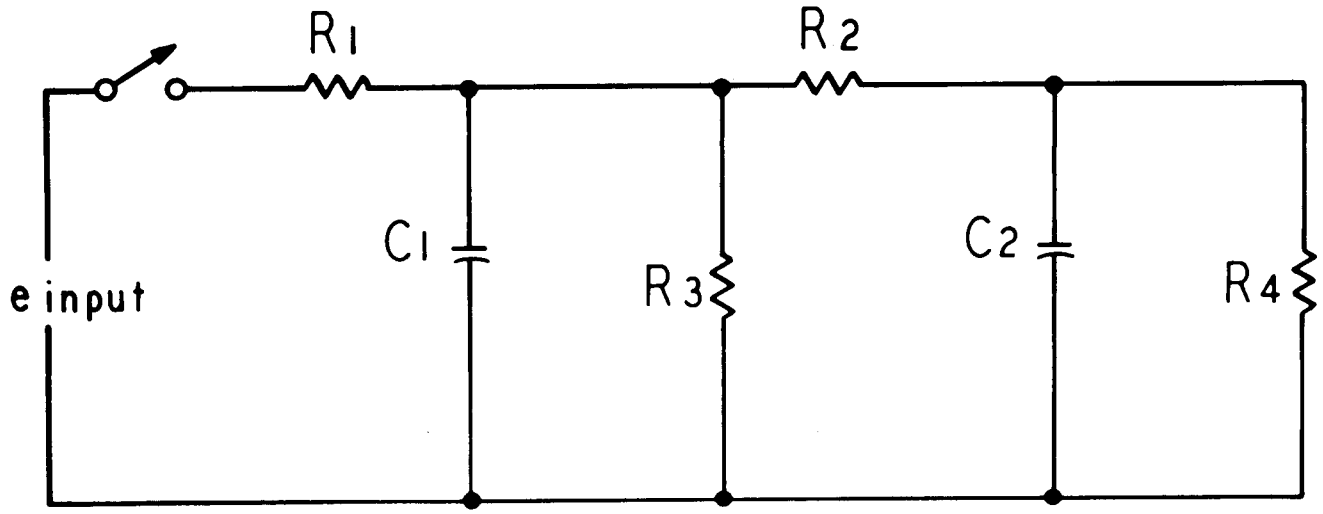

FIG. 5 ELECTRICAL REPRESENTATION OF TUBE FURNACE

UNCLASSIFIED
DWG. 11844

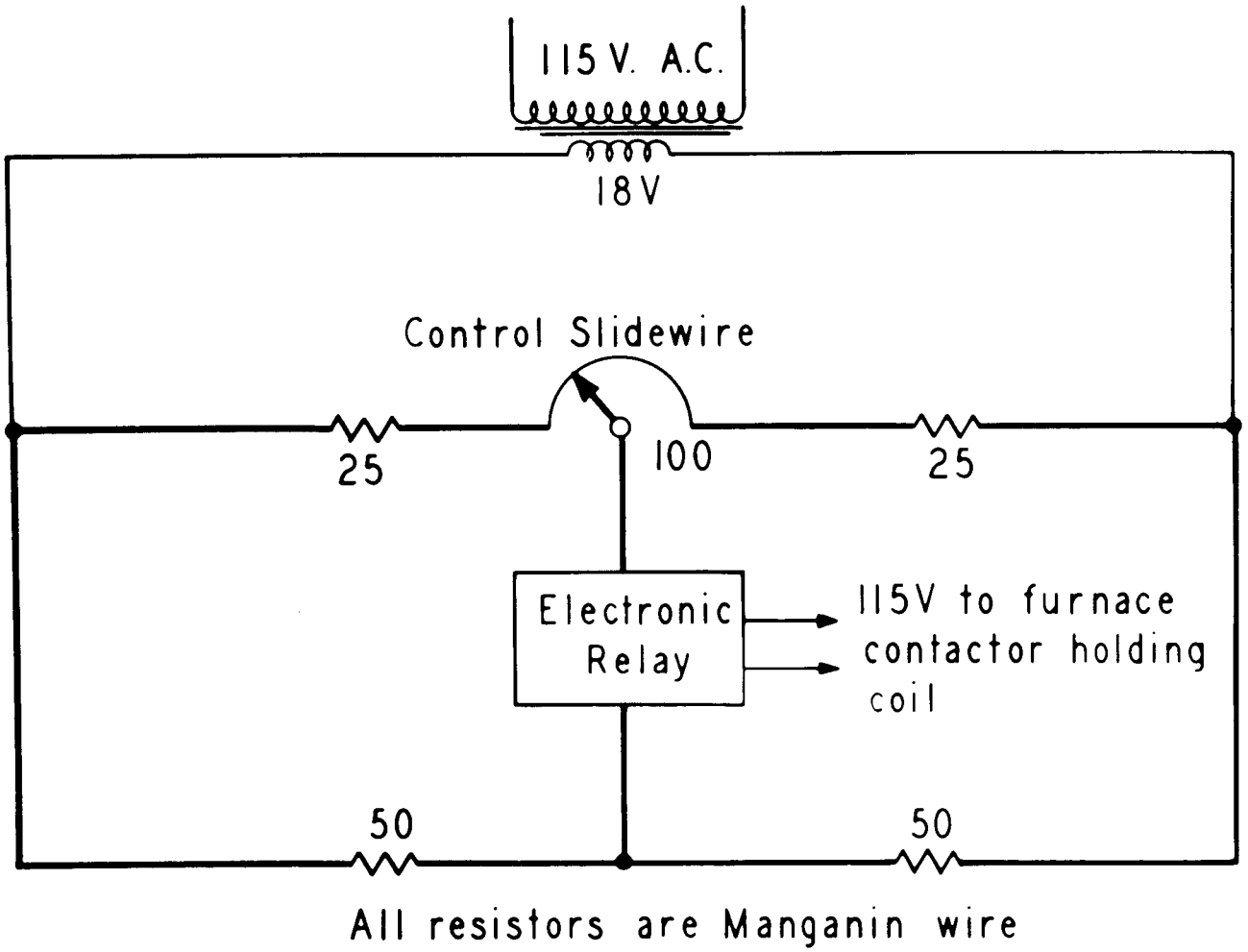

FIG. 6 SIMPLE "ON-OFF" CONTROLLER

UNCLASSIFIED
DWG. 11845

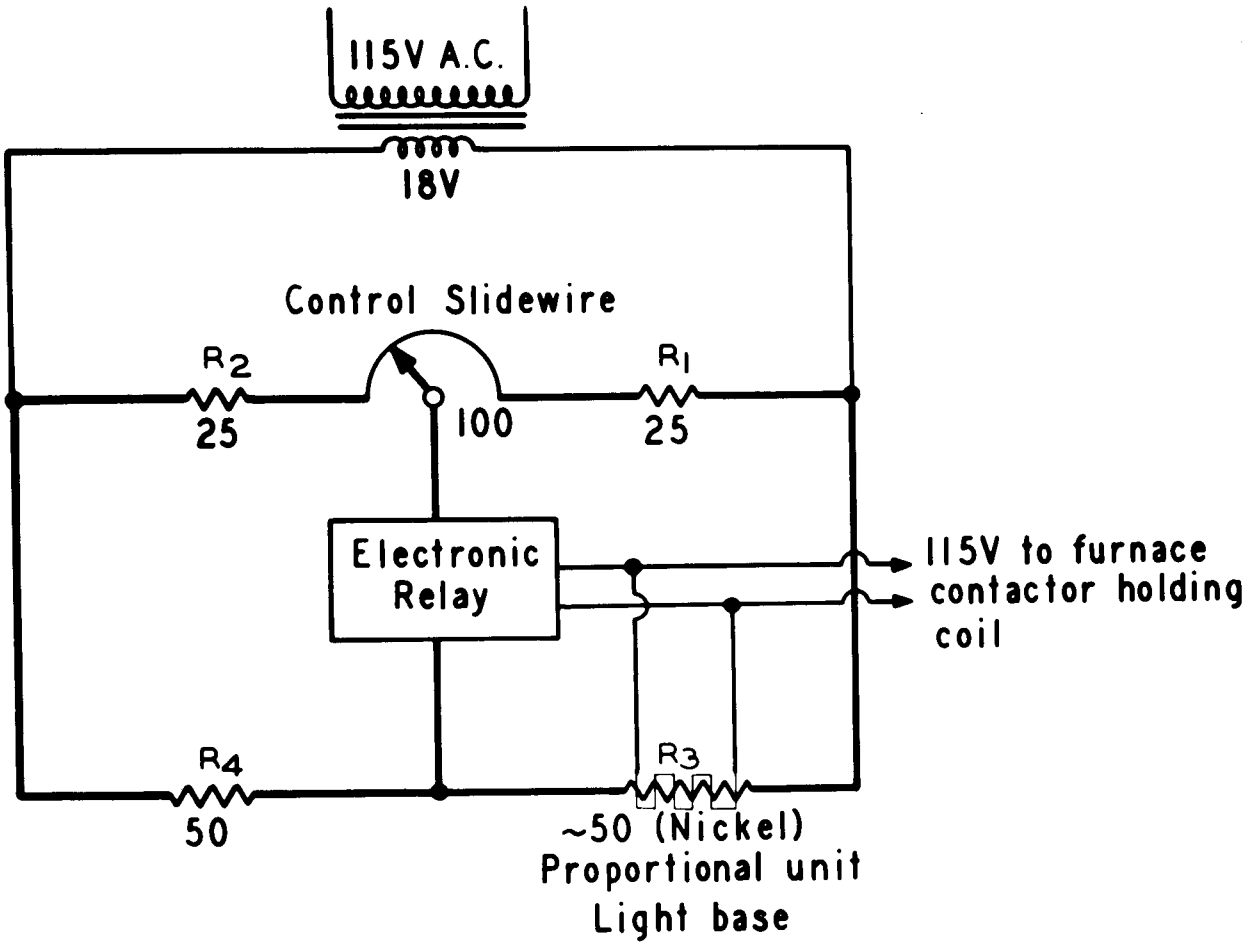

FIG. 7 PROPORTIONAL "PERCENTAGE ON-TIME" TYPE CONTROLLER

UNCLASSIFIED
DWG. 11846

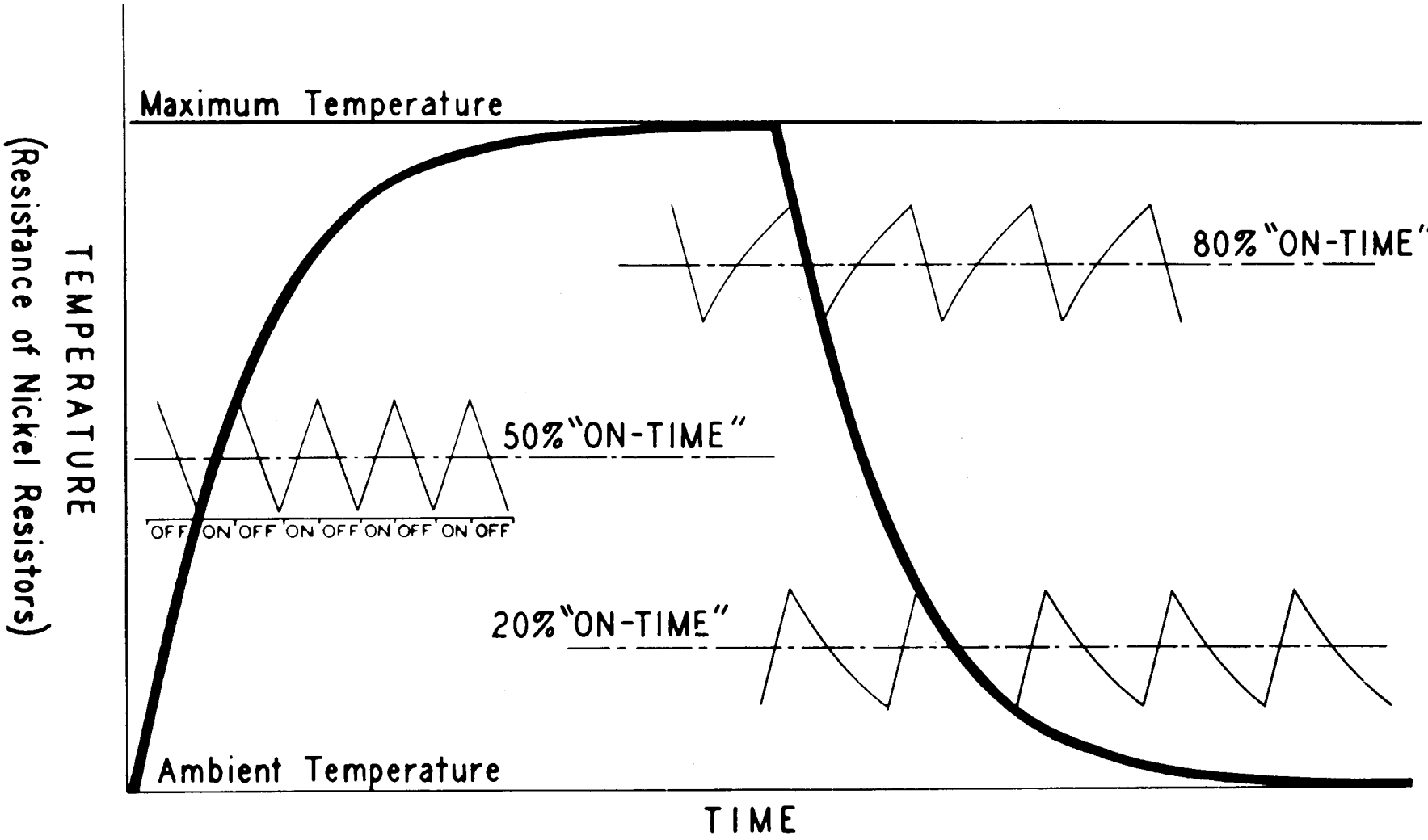

FIG. 8 RESISTOR-HEATER ASSEMBLY HEATING AND COOLING CURVES

UNCLASSIFIED
DWG. 11847

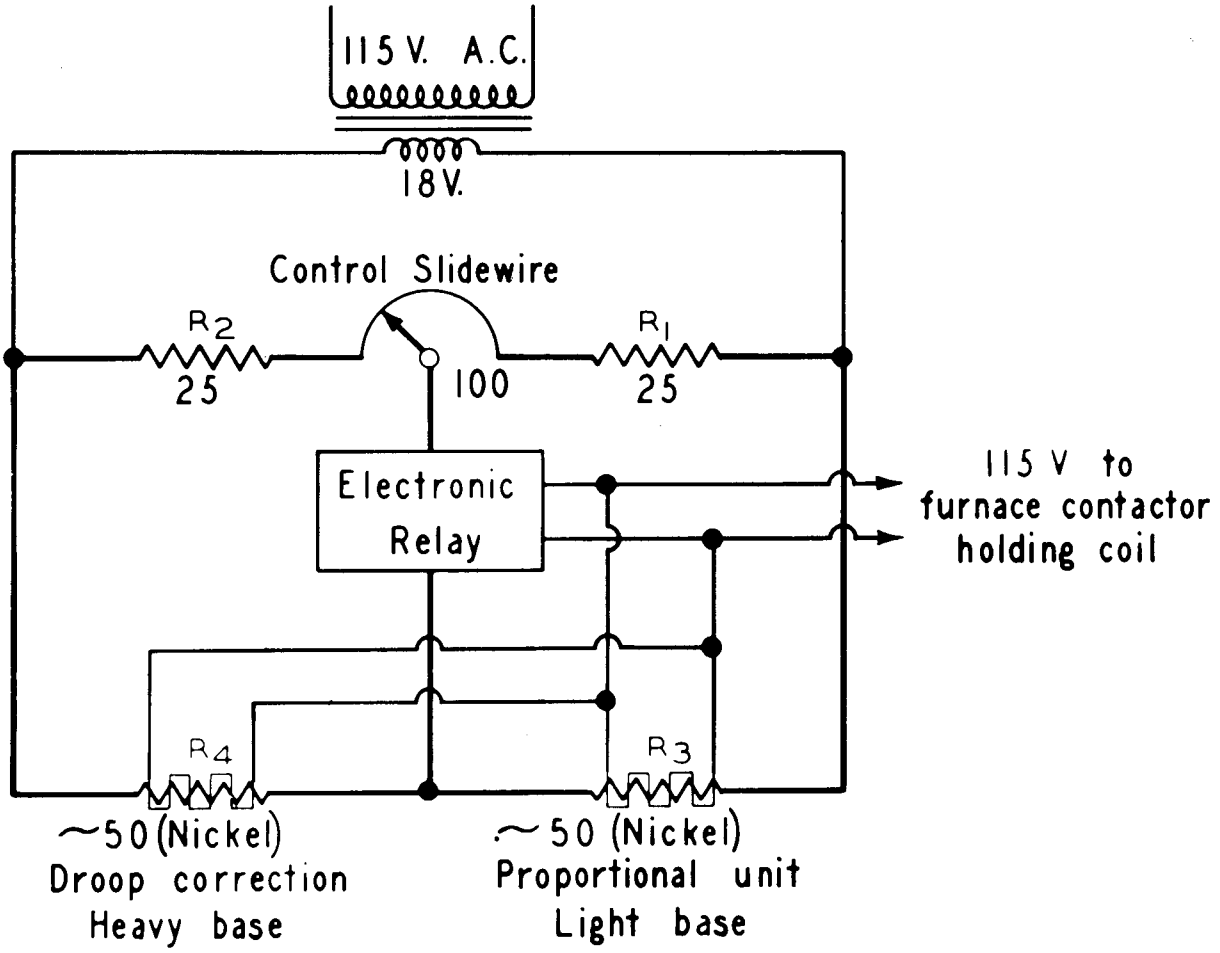

FIG. 9 "PERCENTAGE ON-TIME" TYPE CONTROLLER WITH PROPORTIONAL AND RESET ACTION

UNCLASSIFIED
DWG. 11848

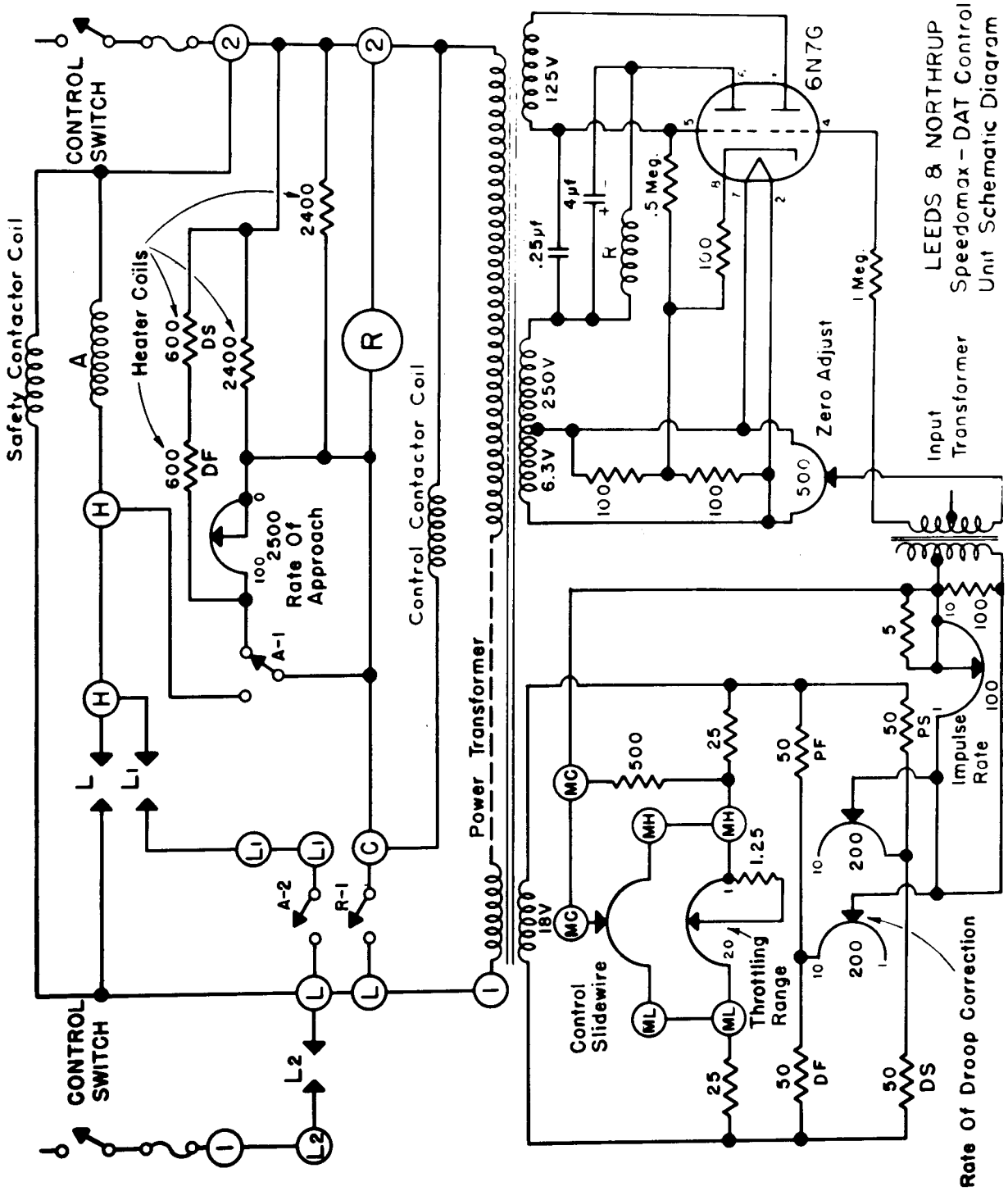

FIG. 10 COMPLETE CIRCUIT OF "PERCENTAGE ON-TIME" TYPE CONTROLLER

UNCLASSIFIED
PHOTO 8409

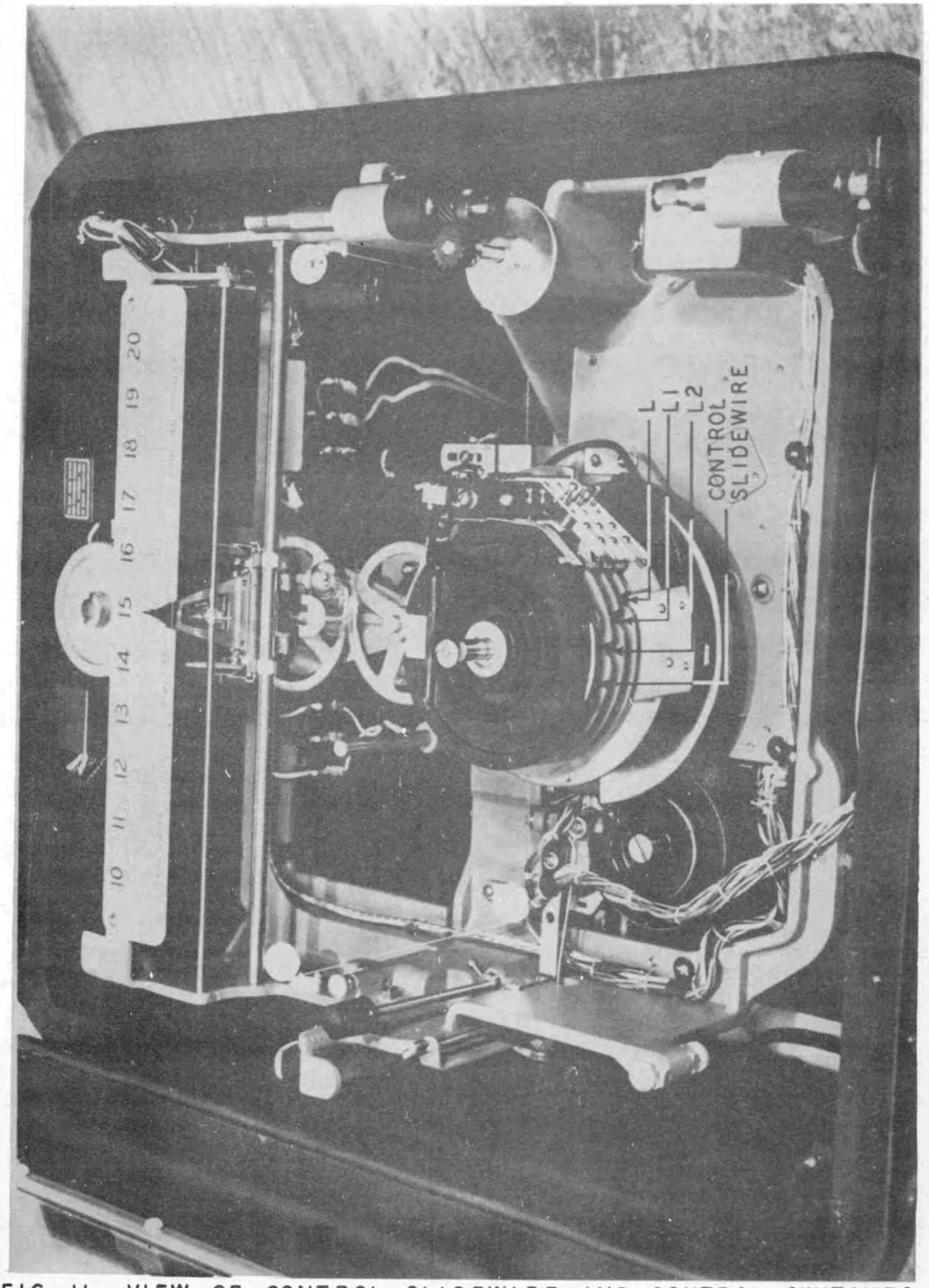

FIG. 11 VIEW OF CONTROL SLIDEWIRE AND CONTROL SWITCHES

UNCLASSIFIED
PHOTO 8410

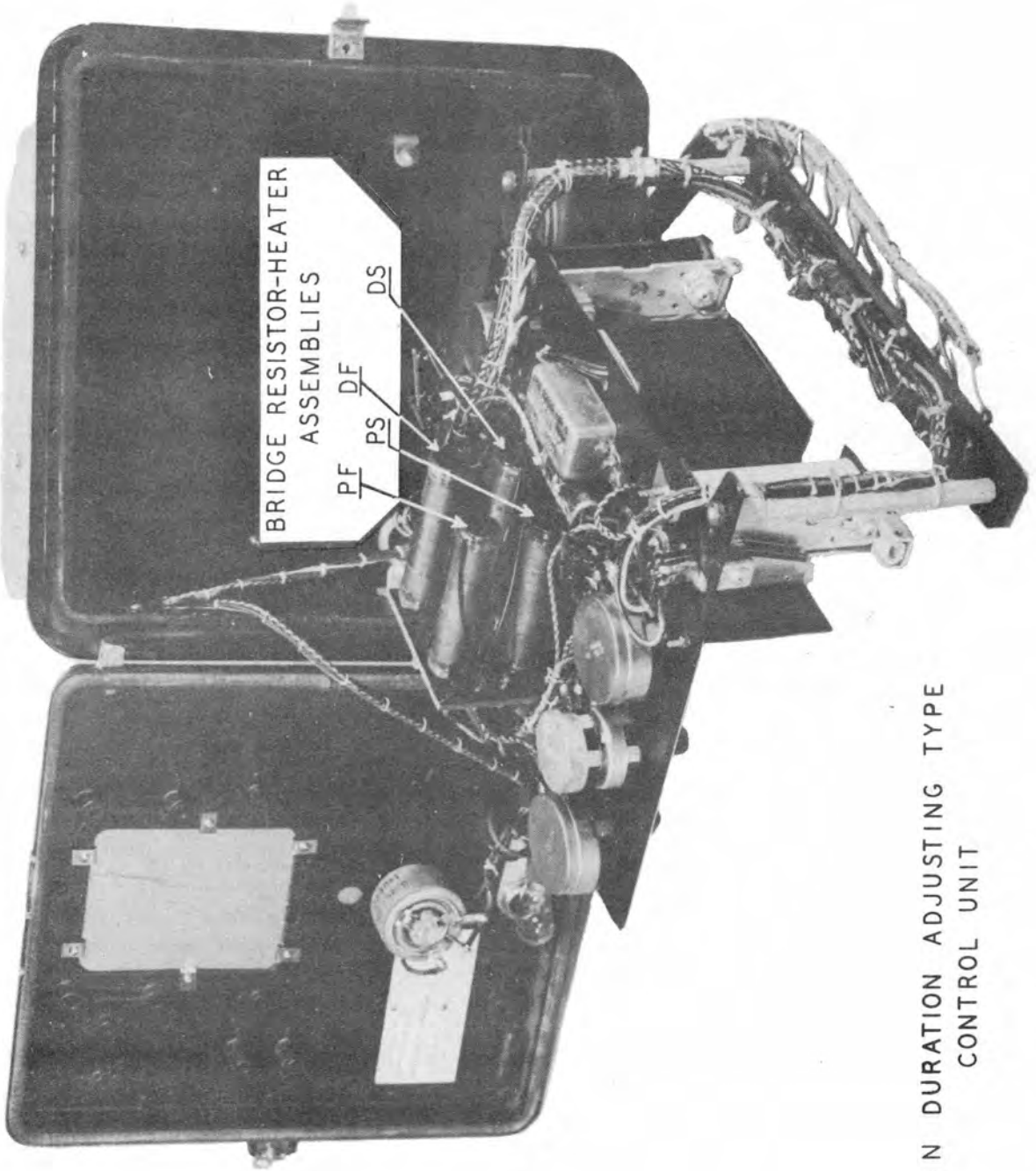

FIG. 12 BACK VIEW OF "PERCENTAGE ON-TIME" TYPE CONTROL UNIT SHOWING THE FOUR RESISTOR-HEATER ASSEMBLIES