[redacted]

CENTRAL RESEARCH LIBRARY
DOCUMENT COLLECTION

OAK RIDGE NATIONAL LABORATORY LIBRARY
3 4456 0023192 4

ORNL-1417

Reactors-Research and Power

ORNL X-PILE FILTER HOUSE

OAK RIDGE NATIONAL LABORATORY
CENTRAL RESEARCH LIBRARY
CIRCULATION SECTION
4500N ROOM 175
LIBRARY LOAN COPY
DO NOT TRANSFER TO ANOTHER PERSON
If you wish someone else to see this report, send in name with report and the library will arrange a loan.
UCN-7969 (3 9-77)

OAK RIDGE NATIONAL LABORATORY
OPERATED BY
CARBIDE AND CARBON CHEMICALS COMPANY
A DIVISION OF UNION CARBIDE AND CARBON CORPORATION
UCC
POST OFFICE BOX P
OAK RIDGE, TENNESSEE

[redacted]

[redacted]

[redacted]

ORNL 1417

This document consists of 17 pages.
Copy 6 of 164 copies. Series A

O R N L

X - P I L E F I L T E R H O U S E

By F. M. Tench and M. E. Ramsey

May 21, 1952

DECLASSIFIED Per Letter Instructions Of
AEC 1-26-54
W C Brown
for N. T. Bray
6-2-54 SUPERVISOR LABORATORY RECORDS
ORNL

[redacted]

[redacted]

OAK RIDGE NATIONAL LABORATORY LIBRARY
3 4456 0023192 4

[redacted]

ORNL X-PILE FILTER HOUSE

I. Introduction

The ORNL X-pile Filter House was designed to filter 120,000 cfm of air at a temperature of 215°F and a negative pressure of 50" wg. The expected dust load was less than 900 grams per day of particles ranging in size from 600 microns down, with a large part of them in the submicron range. The designed efficiency of this house was 99.9% or better for particles down to 0.1 micron in size.

It has been estimated that the cooling air stream normally contains 280 grams of atmospheric dust per day (0.3 grains/1000 cu. ft.). To remove much of this, the cooling air is filtered before it enters the pile with American Air Filter Corporation's airmat type PL-24 filter units loaded with 3/32" type G airmat filter media. Although this media has a discoloration efficiency of approximately 20%, the actual amount of dust that it removes is believed to be low.

II. Description of the Filter House

A. General Structural Details:

The filter house is a large reinforced concrete structure composed of four identical cells, each containing a roughing filter and a polishing filter.

The air enters the top of the filter house, passes downward through the roughing filter, then horizontally through the polishing filter into the exit air duct.

A canal located across the front of the filter house provides a water seal between the roughing filter area and the atmosphere and is a safe receptacle for the dust laden filters when the filter media is being renewed.

The steel supporting structure for the filter frames is sealed to the

[redacted]

concrete wall of the filter house with a copper flashing which had a layer of calking compound placed between the flashing and wall when the filter house was being built. The filter frames and filter pockets are gasketed to each other and to the steel supporting structure with a 1/4" felt gasket.

To preclude the possibility of a dust leak around the filters, the polishing filters are surrounded by an air seal, which is an air space encircling the filter frames open to the atmosphere. The high pressure in this zone as compared to the pressure on either side of the polishing filter prevents any leakage of contaminated air around the filters.

All access to the filters is through removable roof slabs. In fact, practically all maintainance of the filters is done remotely through these roof openings.

B. Roughing Filters:

The roughing filters are American Air Filter Company deep pocket filters, each pocket containing two layers of filter media. Each cell contains 30 frames of 5 pockets each. The filter media used is one layer of A.A.F. Filterdown F.G. #25 and one layer of Filterdown F.G. #50. The following is a list of data pertaining to these filters:

	F.G. #50	F.G. #25
Thickness of sample tested, single layer	1/2"	1/2"
Density of media oz./sq. ft.	0.8	0.7
Fibre diameter, microns	$1\frac{1}{4}$	2 3/4
Discoloration efficiency, atmospheric dust	85 + %	70%
Media velocity, deep bed frame, FPM	20	20
Initial resistance at 20 FPM, in w.g.	0.32"	0.11"
Initial resistance in PL frame at 35 FPM	0.56"	0.35"

C. Polishing Filters:

The polishing filters are manufactured by use of Chemical Warfare Service No. 6 paper or AEC No. 1 paper. Five 2' x 2' x 11½" filter units are contained in a plywood frame. The frames are arranged in each cell in two parallel banks, one above the other, each containing five frames.

The CWS #6 paper is primarily composed of specially screened Bolivian asbestos combined and strengthened with other fibers. It has the following characteristics:

Thickness: 0.035" to 0.045"

Minimum tensile strength: In machine direction 7.3 lbs/"width

Resistance at 28 linear feet/minute air velocity: 110 mm water or less.

Penetration 0.3 micron Dioctyl Phthalate smoke at same air velocity: 0.12% or less for one ply.

Water repellency: one ply shall support a column of water not less than 20" without immediate penetration.

The AEC #1 paper is a compound of specially selected and treated Kraft pulp strengthened with other fibers such as asbestos. It has the following characteristics:

Thickness: 0.033" to 0.045"

Minimum tensile strength: Machine direction-above 1½ lbs per inch width.

Resistance at 28 linear feet per minute air velocity: 110-115 mm water or less.

Penetration of 0.3 micron dioctyl phthalate smoke at same air velocity: 0.10 to 0.15% or less.

The filters are manufactured by pleating approximately 257 sq. feet of filter media into 11 inch pleats and fastening these into a 3/4" plywood frame 2' x 2' x 11½" using a high softening point adhesive. The individual pleats

are separated from each other with separators of corrugated paper which form small air ducts between the pleats.

The finished filters have the following specifications:

Resistance to air flow of 1000 cfm at 65°F to 100°F: 1.25" of water or less.

Penetration of 0.3 micron dioctyl phthalate smoke at same air flow: 0.05% or less.

Must withstand 7" of water static pressure without visible sagging, buckling, shifting or vibration of the filter media or separators.

D. Instrumentation:

The instrumentation for the filter house is simple. The static pressure and pressure drop across the roughing filters is indicated by barometric type manometers, and the pressure drop across the polishing filters is indicated by a Hays Limp Diaphram type gage.

A measure of the activity on the filters was originally made using an ion chamber spaced approximately one foot from the surface of the filter frames; its output was amplified and recorded on a Brown electronic recorder. The data gained from this instrument was of limited value and the cost of upkeep high. The instrument was therefore discarded after one year of operation.

III. Maintenance of Filter House

A. Filter Changes:

Maintenance of the filter house is practically non-existent except for the periodic renewal of the filter media. The average life of the roughing filters is two years and the polishing filters two and one-half years.

The roughing filters are changed one cell at a time at approximately six month intervals. A change is made when the pressure drop across the filter house approaches or exceeds 8.00 inches water gage. The cell with the maximum pressure drop is always chosen.

To make this change, the desired cell is closed off from the air stream in such a manner that it is maintained at a slight negative pressure. All roof slabs are removed and the entire set of used filters wet down using a wetting agent to reduce dusting as the filter pockets are submerged in the canal. Working through the open roof of the building, the filter pockets are pulled from the frame and dumped into the canal. The radiation at the open end of the pockets is approximately 50 mr/hr.

When all the pockets are thus submerged and the cell washed out, men outfitted in protective clothing and wearing gas masks* enter the cell and

---

*supplied air masks, chemox self contained masks, or army assault masks with US-M-11 cannisters (red cannisters).

---

install the preloaded and pregasketed pockets containing the new filter media. The radiation inside of the cell is approximately 15 mr/hr during this work.

The wet pockets in the canal are then stripped of the used media. This can be done without danger as the hazard of handling the pockets is that of inhaling active dusts and not the exposure to penetrating radiation. The radiation from used media is 10-25 mr/hr at two inches after wetting in the canal for 48 hours.

The unloaded pockets are washed, reloaded, and used in the next change. The contaminated filter media is buried. The activity level of the canal water gets as high as 20,000 c/min/ml during this work.

The polishing filters are all changed at the same time when the pressure drop across them reaches or approaches 5.00 inches water gage. To do this, the air flow through the cell is reduced but not [redacted]f. The roof

slab directly in front of the polishing filter is removed giving access to the dirty face of the filters.

A painter clothed in protective clothing and wearing a gas mask is lowered into the cell on a boatswain's chair. He applies a heavy coat of "Strip Coat" (cocoon) to the face of the filters. The roof slab directly in back of the filters is then removed and this process repeated on the rear face of the filter.

The strip coat produces a tough durable film which is sufficient to seal the dust in the filter while they are being removed from the cell and transported to the burial ground.

The radiation in the cell during this work ranges from 60 mr to 300 mr/hour, the lower bank of filters being the most active.

IV. Characteristics of the Filter House:

A. The following tables will serve to indicate the ranges of the pressure drop occurring in the filter house:

Table #1

Data on Filter Changes - Roughing filters - Inches Water Gage

Date	Cell Changed	ΔP Filter Changed	ΔP average of the 4 cells-Roughing Filter	ΔP average of 4 cells Polishing Filter	ΔP House Before Change	ΔP House After Change
11-16-48*	----	-----	1.10	1.05	3.35	----
4-26-49	4	5.30	4.90	1.55	7.55	6.00
12-18-49	2	5.10	4.30	2.30	7.85	6.35
5-7-50	1	5.00	3.75	2.85	7.75	6.35
10-23-50	3	4.75	3.25	3.50	7.95	6.80

*Date of Start-up of Filter House.

Table #2

Data on Filter Changes - Polishing Filters - Inches Water Gage

Date	Δ P Maximum Polishing Filters	Δ P Average of 4 cells Polishing Filters	Δ P Average of 4 cells Roughing Filters	Δ P House
11-16-48*1	1.10	1.05	1.10	3.35
11-16-49	3.85	2.20	4.20	7.70
11-23-50	4.60	3.60	2.00	6.90
4-30-51*2	5.00	4.05	2.75	8.10
5-27-51*3	1.60	1.20	2.65	5.15

*1 Date of Startup of Filter House.

*2 Date just prior to complete change of Polishing Filters.

*3 Date just after complete change of Polishing Filters.

B. Dust Loads:

One of the research groups of Oak Ridge National Laboratory has supplied the following data on the dust load of the filters. The data are obtained from the used filters themselves and from various sampling devices installed in the exit air stream.

All measurements of β activity assume one β particle per disintegration and all measurements of γ activity assume one photon at one mev per disintegration. The data quoted were taken after 156 days of operation.

Roughing Filters (600 Filters)

Dust load	239 grams/day
β activity	250 mc at 156 days
γ activity	133 mc at 156 days
U in dust load	less than 0.2 grams/day

Polishing Filters (200 Filters)

Dust Load	less than 10 grams/day, probably 1 gram/day
β activity	290 mc at 156 days
γ activity	127 mc at 156 days
U in dust load	negligible

[redacted]

At the present time there are no figures available for the instantaneous activity content of the filters as these activities are constantly decaying with an unknown mixture of half lives.

C. Efficiency of the Filter House:

The efficiency of the filter house is estimated to be in the order of the designed efficiency. This estimate is based largely on data obtained from a location other than the filter house. The following facts are cited in support of this conclusion.

1. The efficiency of the Polishing filter units at another building using an ultrafilter as a reference was found to be between 98% and 100%. In general, the average particle size at this location should be somewhat smaller than the particles emanating from the pile.

2. The evaluation of F.G. #25, and F. G. #50 Filterdown and CWS #6 filter media in pile air with CWS #6 filter media as a reference indicated an efficiency of 99.9 %.

3. The evaluation of another filter house, a miniature duplicate of the pile filter house, an ultrafilter as a reference indicated efficiency in the order of 99.7% at a contaminated dust flow rate of 10 millicuries per hour.

4. A recorder reading the activity adhering to a continuous sticky tape which passed into the air leaving the filter house, perpendicular to the air stream did not show any active particles during its six months of operation.

V. Manpower Requirements for Changing Filters

Roughing Filters - Man Days/Cell

Loading and gasketing filter pockets	Millwrights	6 man days
	Laborers	2 man days
Changing filters	Operators	4 man days
	Riggers	2 man days

	Utility mechanics	1 man day
	H. P. surveyor	1 man day
Unloading and cleaning pockets	Operators	10 man days
	Total	26 man days

The loading and gasketing of filter pockets is done prior to the filter change and the unloading and cleaning of pockets is done after the filter change. The removal of the dirty pockets and installation of the clean ones is done over an eight-hour period.

Polishing Filters - Man Days/Cell

Manufacture and loading of frames	Carpenters	10 man days
Changing filters	Riggers	10 man days
	Painters	3 man days
	Truck driver	2 man days
	H. P. surveyor	2 man days
	Total	27 man days

The filter frames were constructed and loaded well in advance of the date of the change.

Five frames (1/2 cell) were all that could be changed conveniently in an eight-hour day. The time schedule used was five frames on Monday while the pile was down and the remaining five frames on the following Thursday. On Thursday the pile was operating using only three of the four filter cells.

VI. Cost of Operation

The cost of operation of the filter house is low except for filter changes. The normal operation of the house requires less than 1 man hour per day.

The following is breakdown of the cost of a complete filter change:

Roughing Filters			
	Materials	$3,800	
	Labor & Equipment	3,400	
		$7,200	$7,200
Polishing Filters			
	Materials	$10,000	
	Labor & Equipment	4,500	
		$14,500	14,500
			$21,700

[redacted]

With one roughing filter change every two years and one polishing filter change every two and one-half years, this comes to an annual maintainance cost of $9400.00.

By F. M. Tench and M. E. Ramsey

FMTench:md

5-21-52

[redacted]

B I B L I O G R A P H Y

1. Data supplied by the Technical, Chemistry, and Health Physics Divisions of the Oak Ridge National Laboratory.

2. Letter of November 19, 1948, from James W. May of the American Air Filter Company to F. C. McCullough of Oak Ridge National Laboratory.

3. "An Informal Report on the Development and Manufacture of Special Filters", NP-368, by the Chemical Warfare Service, May 12, 1948.

4. "Survey of Electrostatic Precipitators for the Separation of Radioactive Particles". ORNL-310, by F. C. McCullough, J. A. Lane and F. L. Culler.

5. "Slug Ruptures in the Oak Ridge National Laboratory Pile" - ORNL-170, by C. D. Cagle and L. B. Emlet, October 13, 1948.

6. CWS Specification X10 197-54-303.

7. Tentative Specification of High Efficiency Filters for Laboratory Hood Exhaust Systems. Revised 1-15-52 ORNL.

8. Investigation of Stack Gas Filtering Requirements and Development of Suitable Filter - Arthur D. Little Inc. NYO-1575 Waste Disposal.

[redacted]

UNCLASSIFIED
DWG. 16806

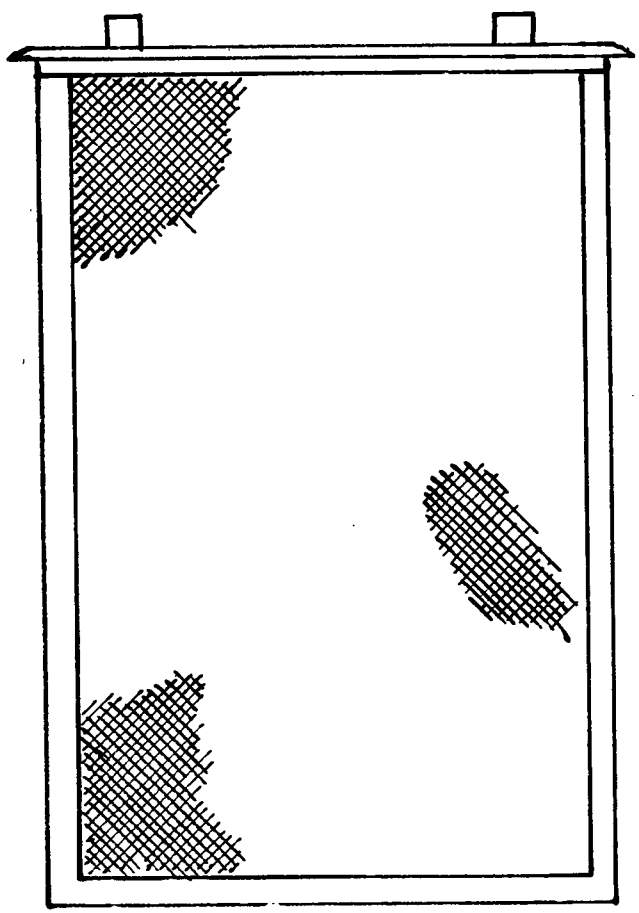

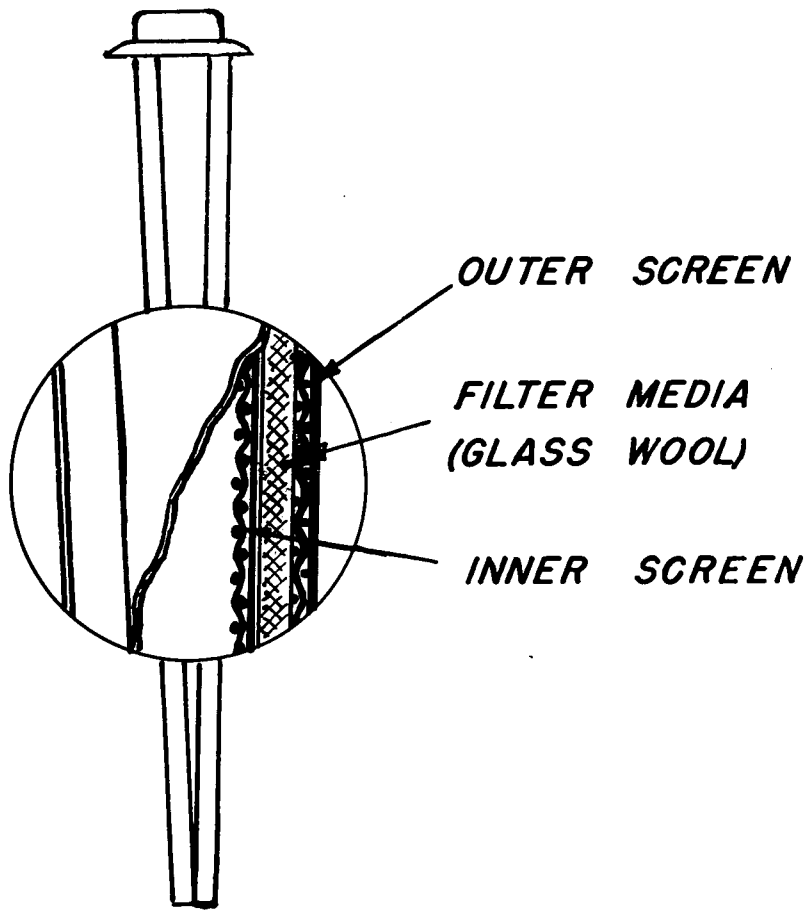

A.A.F. FILTER

UNCLASSIFIED
DWG. 16807

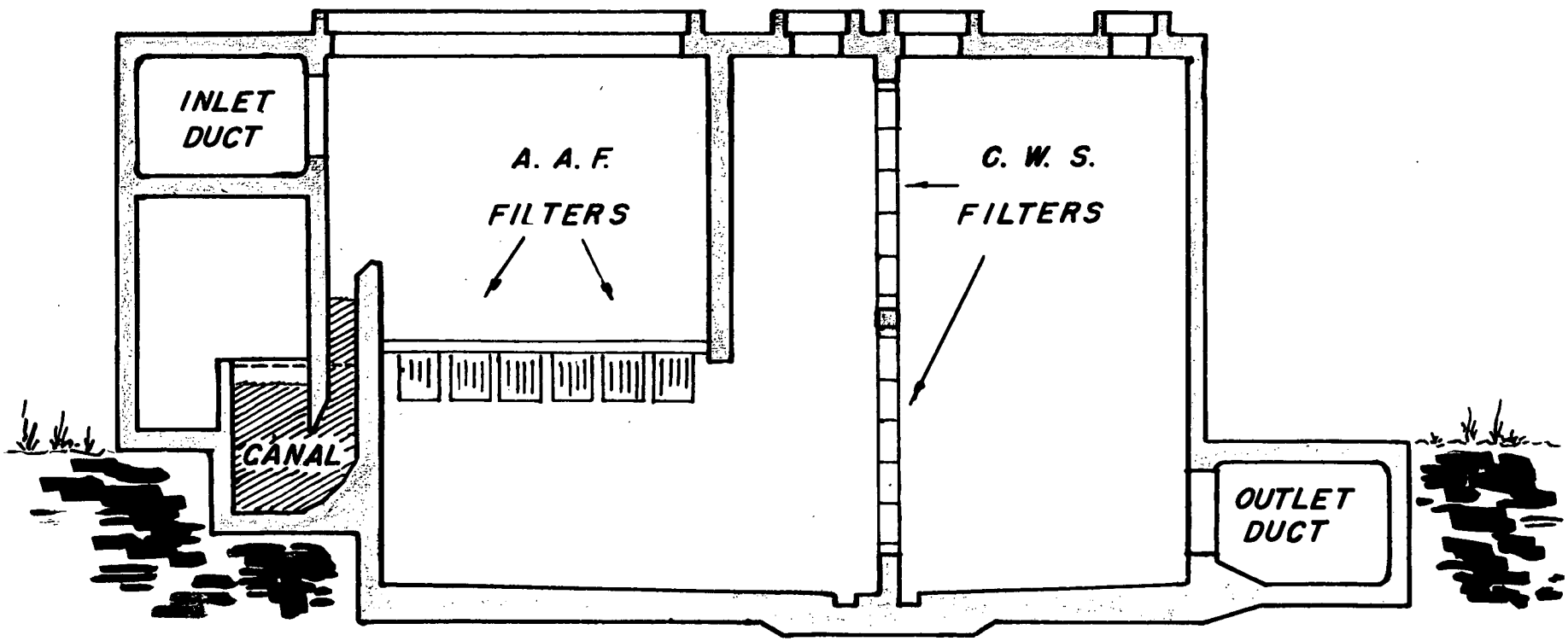

FILTER HOUSE

UNCLASSIFIED
DWG. 16808

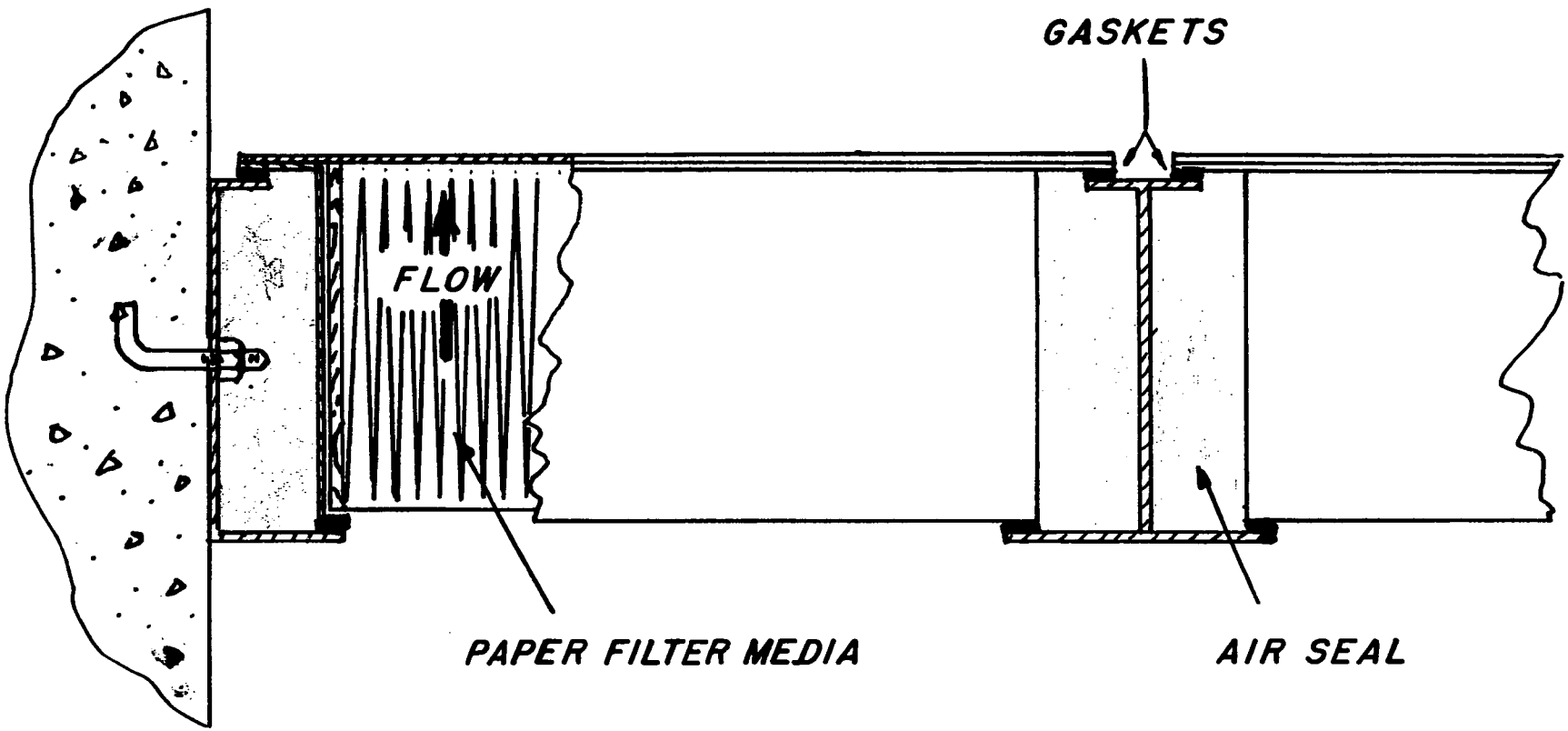

C.W.S. FILTERS