MARTIN MARIETTA ENERGY SYSTEMS LIBRARIES
3 4456 0049265 1

TRAINING SCHOOL LIBRARY

ORNL-1335
PROGRESS REPORT
9A

INSTRUMENT RESEARCH AND DEVELOPMENT

QUARTERLY PROGRESS REPORT

FOR PERIOD ENDING JANUARY 20, 1952

CENTRAL RESEARCH LIBRARY
DOCUMENT COLLECTION

LIBRARY LOAN COPY

DO NOT TRANSFER TO ANOTHER PERSON

If you wish someone else to see this document, send in name with document and the library will arrange a loan.

OAK RIDGE NATIONAL LABORATORY
OPERATED BY
CARBIDE AND CARBON CHEMICALS COMPANY
A DIVISION OF UNION CARBIDE AND CARBON CORPORATION
UCC
POST OFFICE BOX P
OAK RIDGE, TENNESSEE

ORNL-1335

This document consists of 23 pages.
Copy 9 of 312. Series A.

Contract No. W-7405 eng 26

INSTRUMENT RESEARCH AND DEVELOPMENT

QUARTERLY PROGRESS REPORT

for Period Ending January 20, 1952

DATE ISSUED

AUG 12 1952

OAK RIDGE NATIONAL LABORATORY
Operated by
CARBIDE AND CARBON CHEMICALS COMPANY
A Division of Union Carbide and Carbon Corporation
Post Office Box P
Oak Ridge, Tennessee

MARTIN MARIETTA ENERGY SYSTEMS LIBRARIES
3 4456 0049265 1

INTERNAL DISTRIBUTION

1. G. T. Felbeck (C&CCC)
2-3. Chemistry Library
4. Physics Library
5. Biology Library
6. Health Physics Library
7. Metallurgy Library
8. Reactor Experimental Engineering Library
9-10. Training School Library
11-14. Central Files
15. C. E. Center
16. C. E. Larson
17. S. Cromer (K-25)
18. L. B. Emlet (Y-12)
19. A. M. Weinberg
20. E. H. Taylor
21. E. J. Murphy
22. E. D. Shipley
23. C. S. Harrill
24. F. C. VonderLage
25. R. C. Briant
26. J. A. Swartout
27. S. C. Lind
28. F. L. Steahly
29. A. H. Snell
30. A. Hollaender
31. M. T. Kelley
32. K. Z. Morgan
33. J. S. Felton
34. A. S. Householder
35. C. E. Winters
36. D. W. Cardwell
37. E. M. King
38. L. M. Reynolds
39. W. J. Ladniak
40. P. R. Bell
41. C. J. Borkowski
42. W. M. Hurst
43. W. H. Jordan
44. R. S. Livingston
45. E. E. Fairstein
46. J. W. Morfitt
47. C. W. Sheppard
48. W. G. Stone
49. D. D. Cowen
50. C. P. Keim
51. C. D. Susano
52. P. M. Reyling
53. M. J. Skinner
54-57. Central Files (O.P.)

EXTERNAL DISTRIBUTION

58-312. Given distribution as shown in TID 4500 under Instrumentation Category.

TABLE OF CONTENTS

PHYSICS DIVISION 1

- Twenty-Channel Analyzer 1
- Time-of-Flight Spectrometer 2
- Servo for Curve Analyzer 3
- Production and Detection of Heavy Ions 4
- Optics of Polished Scintillation Phosphors 5
- Adjustment of Voltage Distribution on the Electrodes of the 5819 Photomultiplier 7
- Effect of a Longitudinal Magnetic Field on the Resolution of a 5819-NaI Scintillation Spectrometer 9
- Neutron-Sensitive Phosphors 10
- Neutron Response of NaI Scintillation Counters 12

CHEMISTRY DIVISION 12

- A New Linear Amplifier for Scintillation Spectrometry 12
- A Logarithmic Sweep Circuit for Use in Pulse-height Analysis 13
- Photomultiplier Detection of Ionizing Events in a Gas 14

HEALTH PHYSICS DIVISION 16

- Low-level Measurements of Radioactivity in Water 16

INSTRUMENT DEPARTMENT 16

- High-voltage Accelerator Program 16
- Fluorophotometer, Q-1165 16
- A Medium-power Frequency Converter 17
- A Portable Fast-Neutron Survey Instrument, Q-1238 18
- Condenser-type Ionization Chambers, Q-1033-2 18
- X-ray Diffraction Spectrometer, Q-1147 18

INSTRUMENT RESEARCH AND DEVELOPMENT REPORT

PHYSICS DIVISION

TWENTY-CHANNEL ANALYZER

G. G. Kelley P. R. Bell
C. G. Goss

On the basis of experience gained through the use of the ten-channel analyzers described previously,[1] a twenty-channel analyzer was designed and constructed and has been in operation for several months. It differs from the ten-channel units in the layout of the pulse sorter and pulse-sorter power supply in that ten additional scalers and registers are required. Present ten-channel analyzers can be modified by replacing the pulse sorter and pulse-sorter power supply and adding an auxiliary unit containing ten scalers and registers. Alternatively, the present scaler panel and register board can be replaced by a slightly larger unit, as yet undesigned, containing the necessary extra equipment. The height of the pulse sorter and test pulse generator panels have been decreased to allow for this expansion.

The greatest source of dissatisfaction with the ten-channel analyzer has been associated with the need for gating the signal channel off during the analysis of a pulse; the amplifier may be resensitized during a succeeding pulse, which then will not be recorded in the proper channel. This need has been eliminated by an "inspector" circuit that permits a pulse to be analyzed only if a sufficient interval (2.3 μsec) succeeding it is free from pulses. Another source of dissatisfaction has been the difficulty of keeping the reset operation fast enough to prevent a pulse from being recorded in two adjacent channels if it falls near the boundary between them. The new analyzer interrogates all channels simultaneously and produces an output pulse in only one channel by the use of anticoincidence circuitry between discriminators. An improved pulse-lengthener circuit drives the discriminators, which need not be particularly fast since they are not interrogated until at least 0.6 μsec after the crest of an input signal. Each channel requires only one 12AT7 dual triode as a discriminator and half of another 12AT7 as a scaler driver tube. Mainly owing to the simplification in this part of the circuit, the new pulse-sorter chassis requires fewer tubes for twenty channels than the original analyzer required for ten channels. This simplification and a further refinement of design in the auxiliary circuitry make the new analyzer considerably more reliable than the old one. At present the stability is about equal to that of the old analyzer (1% channel width held for a 24-hr period), but from all indications poor quality tube sockets are responsible for most of the variation. A diagram of this unit and a description of the circuit will be published after it has been in use long enough to uncover whatever flaws may be present.

During the testing of the new pulse sorter, sources of error that had been previously overlooked were found external to this unit. An incremental gain variation of about 5% (see Fig. 1) was discovered in the output cathode follower of the A-1 amplifier. The modification shown in Fig. 2 has been made to correct this difficulty (see Fig. 1, MonP-323, for circuit diagram of A-1 amplifier). A type-5687 dual triode with both

[1] G. G. Kelley, "A Multi-Channel Pulse Sorter," *Instrument Research and Development Quarterly Progress Report for Period Ending April 15, 1950*, ORNL-714, p. 29; G. G. Kelley, "Multi-Channel Analyzer," *Instrument Research and Development Quarterly Progress Report for Period Ending July 15, 1950*, ORNL-796, p. 63.

halves in parallel replaces the cathode follower in the last feedback group and drives the load directly.

The motor driven 0.1% helipot in the test pulse generator has been another source of difficulty. It has been found to cause an error of as much as 3% in window width when 40 dial divisions cover one channel.

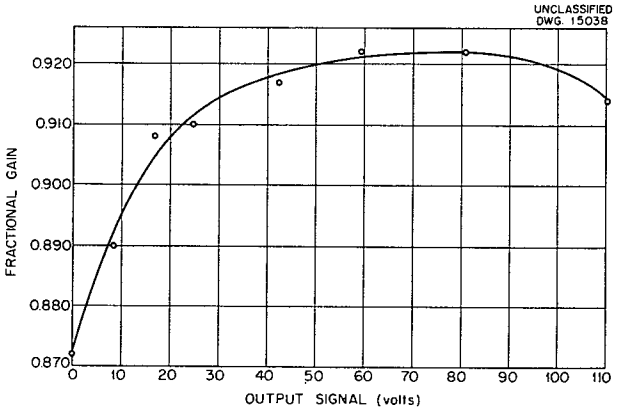

Fig. 1. Gain of Type-6AG7 Tube as a Cathode Follower.

TIME-OF-FLIGHT SPECTROMETER

G. S. Pawlicki[2] E. C. Smith

The slow-neutron time-of-flight spectrometer is essentially completed. The rotating shutter has been successfully operated at 4800 rpm and the anticipated maximum speed is 6000 rpm. These speeds correspond to resolutions of 1.3 and 1.1 μsec per meter, respectively. The mechanical components of the spectrometer operate according to expectations.

As predicted by preliminary trials of the electronic equipment prior to delivery by the Instrument Department,

[2] ORINS research participant.

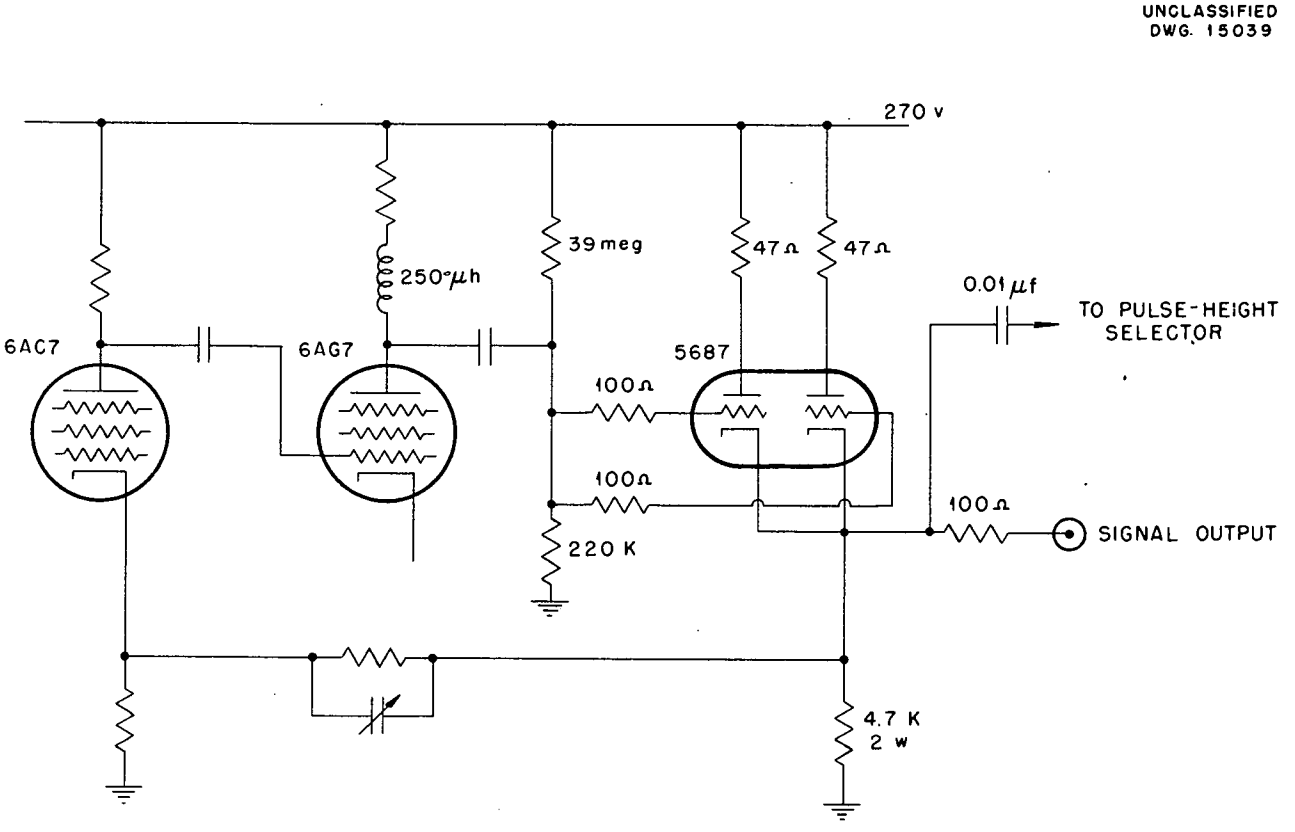

Fig. 2. Modification of Output Feedback Group of A-1 Amplifier.

all failures of the 84-channel counting equipment have been caused by tube failure. This is to be expected in a circuit involving 960 vacuum tubes.

Present operating time of the instrument is being devoted to preliminary spectrum and background measurements, to the spotting of known resonances, and to the determination of the operating characteristics of the instrument.

SERVO FOR CURVE ANALYZER

J. E. Francis P. R. Bell
S. H. Hanauer

A small-velocity servo that will balance the setting of one helipot against another to less than one division has been developed for use in a curve analyzer now under construction. The curve analyzer will analyze spectra from a scintillation spectrometer into the individual components by subtracting one component at a time. It will also partly correct the shape of the curves for statistical spread introduced by the photomultiplier.

A circuit diagram of the servo is shown in Fig. 3. Any change in the potential of the ungrounded grid of *V*-1 causes an unbalance in the potential at the plates of *V*-1, and this in turn causes an unbalance of the plates of *V*-2. The unbalance of the plates at *V*-2 has two effects:

1. It causes a current to flow into one-half of *V*-3. This closes either relay No. 1 or No. 2, depending on the sign of the input signal to the servo. The closing of a relay connects a d-c motor in the cathode circuit of the 2050 thyratrons (*V*-4, *V*-5), and the direction of rotation of the motor is determined by the closed relay.

2. It raises the potential of one of the plates of the 6AL5 (*V*-6). This raises the d-c level of the grids of *V*-4 and *V*-5 so that they fire over a

UNCLASSIFIED
DWG. 15040

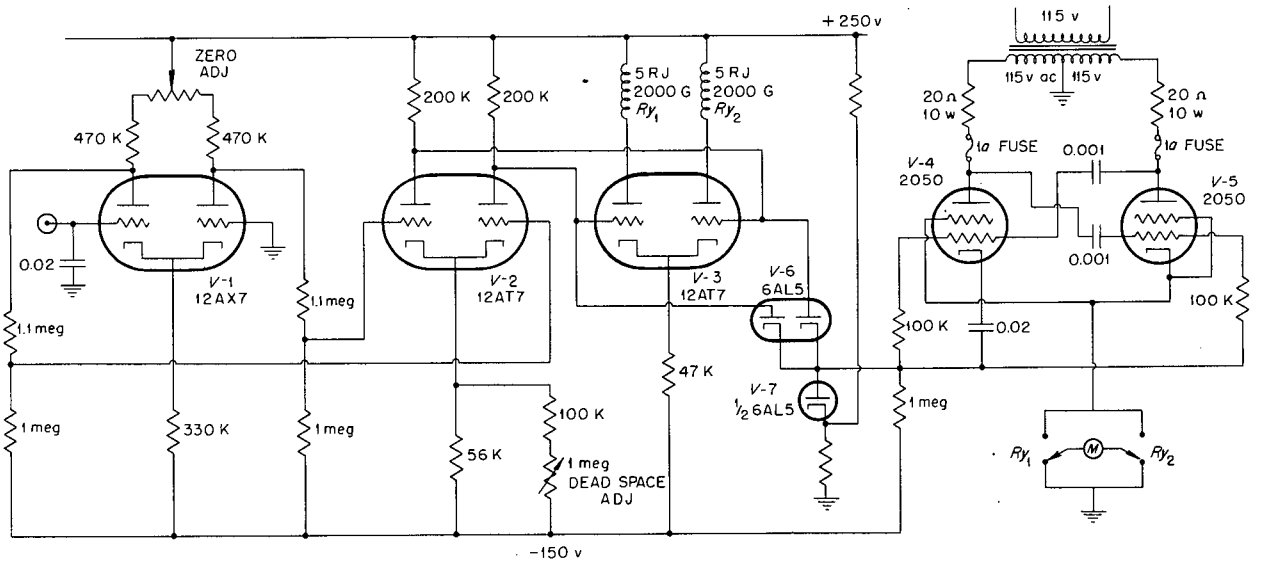

ALL RESISTORS 1w (5%) UNLESS OTHERWISE SPECIFIED;
ONE SIDE OF FILAMENT GROUNDED TO CHASSIS

Fig. 3. Servo for Curve Analyzer.

part of a cycle. The fraction of a cycle over which they conduct depends on the magnitude of the input signal.

To prevent damage to the motor, the maximum voltage applied is limited by limiting the voltage applied to the grids of the thyratron by means of *V*-7. Variations in the load are compensated for by the back emf of the motor.

PRODUCTION AND DETECTION OF HEAVY IONS

G. E. Evans P. M. Stier
C. F. Barnette V. L. DiRito

During the past quarter the PIG-type ion source described in previous quarterly reports has been used for production of H^+, He^+, N^+, N_2^+, Ne^+, A^+, and A^{++} ions at energies of 50 to 300 kev. Analyzed beam currents of 100 to 150 μa normally have been used for the research described here, although several times this amount of current is available if needed. The particular source in use has been run satisfactorily for more than 500 hr of operating time. A bench model of the source has been converted to include a resistance-heated source chamber to permit use of solid source materials.

The operation of a conventional electrostatic electron multiplier as a detector of low-energy heavy ions is being studied. In a preliminary experiment the counting efficiency of the electron multiplier for Po^{210} alpha particles has been measured roughly as 100%. Experimental equipment has been built that permits the exposure of the electron multiplier to a beam of ions of known intensity, energy, and mass. Ions are produced in a PIG-type source and are magnetically analyzed to select a desired energy and mass. A system of variable apertures permits extreme attenuation of the beam by known amounts so as to allow comparison of the electron multiplier output current (or counting rate) with the incident positive ion current as measured by an electrometer. N_2^+ ions of 10-kev energy have been detected with this apparatus in preliminary bench tests (see Fig. 4).

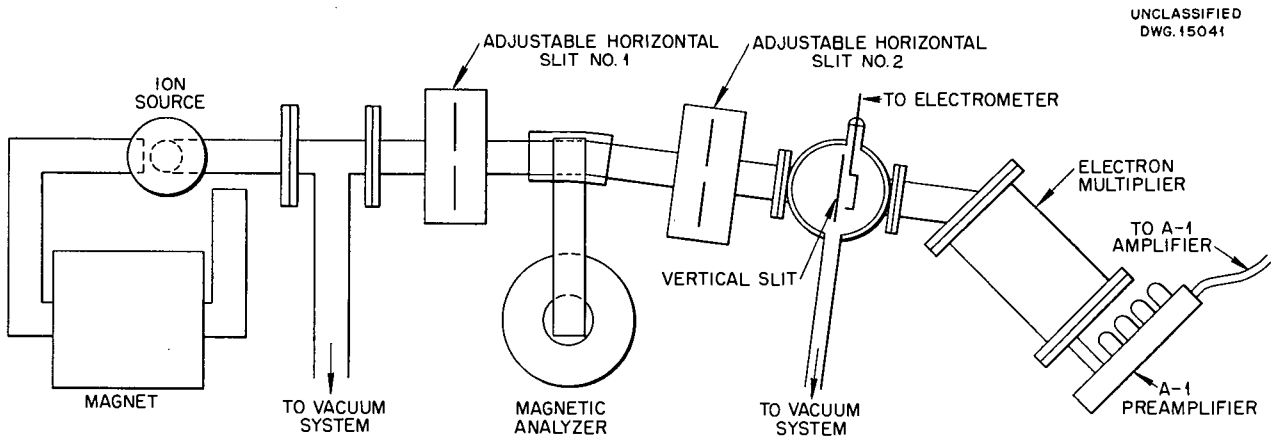

NOTE: BOTH VERTICAL SLIT AND ELECTROMETER COLLECTOR MAY BE MOVED ACROSS OR OUT OF BEAM.

Fig. 4. Equipment for Ion Source and Electron Multiplier Response Studies.

UNCLASSIFIED
DWG. 15042

OPTICS OF POLISHED SCINTILLATION PHOSPHORS

W. E. Millet[3]

Many factors are involved in obtaining good resolution with a scintillation spectrometer. One of the more important factors is the efficiency with which the light produced in the phosphor is collected onto the photocathode of the multiplier. The following analysis was undertaken in order to understand the nature of the collection process. Only polished surfaces were considered, although it has been observed experimentally that better resolution is obtained with ground surfaces.

A clear crystal in the form of a right-circular cylinder that has polished surfaces, with the top and bottom surfaces being plane and parallel to one another, will be considered (Fig. 5). If the index of refraction of the crystal is n_1, if the top and side surfaces are in contact with air, and if the bottom surface is in optical contact with a clear medium that has an index of refraction, n_2, where $n_1 > n_2 > 1$, the problem is to determine that fraction of the total light that leaves an isotropic point source within the crystal and enters into medium n_2.

The first consideration will be the light from the point source that is directed into the lower hemisphere.

A ray incident upon the side of the crystal will be totally reflected if $\cos\theta > 1/n_1$, where θ is the angle between the ray and the axis of the crystal. This relation follows immediately from the condition for total internal reflection if the ray and the normal to the side at the point of reflection define a plane normal to the base. If this plane

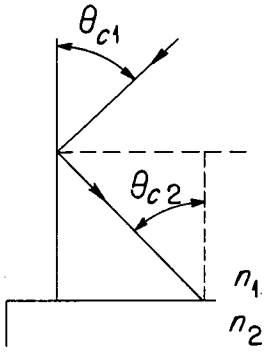

Fig. 5. Reflection of a Ray of Light from the Cylindrical Surface of a Polished Phosphor.

is other than normal to the base the inequality must still hold, since the angle of incidence is then still greater than the critical angle.

A ray striking the bottom of the crystal will be transmitted if $\sin\theta < n_2/n_1$. Let

$$\cos\theta_{c1} \equiv \frac{1}{n_1} \tag{1}$$

and

$$\sin\theta_{c2} \equiv \frac{n_2}{n_1} . \tag{2}$$

If $\theta_{c1} = \theta_{c2}$, a ray that strikes the side at the critical angle will upon reflection strike the bottom at the critical angle. Then all light directed downward within a cone of half-angle θ_{c2} will enter medium n_2 whether or not the light in this cone strikes the side of the crystal first. Thus the fraction of the light directed in the lower hemisphere that enters medium n_2 is a constant independent of the position of the light source within the crystal. This is a very desirable situation from the standpoint of good resolution in gamma-ray scintillation spectrometers.

[3] University of Florida research participant.

This situation will also be realized if

$$\theta_{c1} \geq \theta_{c2} \ . \qquad (3)$$

If, however,

$$\theta_{c1} < \theta_{c2} \ , \qquad (4)$$

the fraction of light entering medium n_2 is *dependent* upon the position of the light source within the crystal.

The light that goes into the upper hemisphere will now be considered (see Fig. 6). The light that will escape from the top must satisfy

$$\sin\theta < \frac{1}{n_1} \ .$$

If

$$\sin\theta_{ct} \equiv \frac{1}{n_1} \ ,$$

then

$$\theta_{ct} = \frac{\pi}{2} - \theta_{c1}$$

and

$$\theta_{ct} < \theta_{c2} \ .$$

UNCLASSIFIED
DWG. 15043

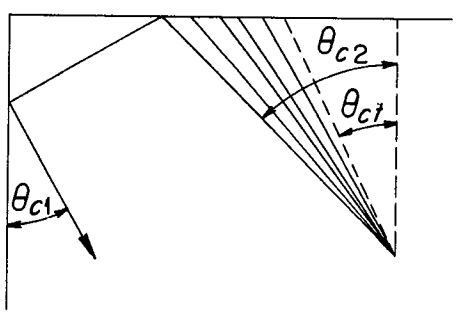

Fig. 6. Reflection of Light from the Top Surface of a Polished Phosphor.

Therefore, if $\theta_{c1} = \theta_{c2}$, that light going into the upward hemisphere, which lies between the cones having half-angles θ_{ct} and θ_{c2}, will be totally reflected. Here again it makes no difference if the light strikes the side before it strikes the top. If $\theta_{c1} > \theta_{c2}$, the previous analysis still applies. The case for $\theta_{c1} < \theta_{c2}$ is again undesirable and for the same reason as before.

The resolution of the gamma-ray spectrometer will be further improved if the total fraction of light entering n_2 is increased. Thus it would be desirable to reflect back to the crystal the light within the cone that has half-angle θ_{ct}.

It is seen from this analysis that for good resolution $\theta_{c1} \geq \theta_{c2}$, which may be rewritten in terms of the indices n_1 and n_2:

$$\sin\theta_{c1} \geq \sin\theta_{c2} \ ,$$

$$\sqrt{1 - \cos^2\theta_{c1}} \geq \sin\theta_{c2} \ ,$$

$$\sqrt{1 - \left(\frac{1}{n_1}\right)^2} \geq \frac{n_2}{n_1} \ ,$$

or

$$n_2 \leq \sqrt{n_1^2 - 1} \ . \qquad (3a)$$

The solid angle subtended by a cone of half-angle θ_{c2} is

$$\Omega = 2\pi \ (1 - \cos\theta_{c2}) \ .$$

By assuming that the reflector on the top surface is 100% effective, the

fraction of the total light that enters n_2 will be

$$f = \frac{2(2\pi)(1 - \cos\theta_{c2})}{4\pi}$$

$$= 1 - \cos\theta_{c2} = 1 - \sqrt{1 - \sin^2\theta_{c2}}$$

or

$$f = n_1 - \frac{\sqrt{n_1^2 - n_2^2}}{n_1}.$$

Then by Eq. 3*a*,

$$f \leq \frac{n_1 - 1}{n_1}.$$

The equality holds when $\theta_{c1} = \theta_{c2}$; i.e., when

$$n_2 = \sqrt{n_1^2 - 1}.$$

It should be pointed out that if Eq. 3 is satisfied, the light that goes out the side of the crystal can never be reflected back into the crystal in such a manner as to make it pass into medium n_2. This is true since the rays refracted out the side of the crystal have all angles represented, and any one of these when reflected back into the crystal must be within a cone of half-angle $(\pi/2 - \theta_{c1})$ and cone axis parallel to the base of the cylinder and will consequently not enter medium n_2. It should also be noted that for a cylindrical crystal with a circular cross section, the amount of light escaping out the side of the crystal is not constant.

ADJUSTMENT OF VOLTAGE DISTRIBUTION ON THE ELECTRODES OF THE 5819 PHOTOMULTIPLIER

W. E. Millet

The photocurrent from different points on the photocathode was measured. A collection voltage of about 45 v between the photocathode and the multiplier unit was used while all of the multiplier dynodes were connected. An image of the face of a cathode-ray tube was focused on the photosurface of the 5819 photomultiplier. The beam of the cathode-ray tube was scanned along a straight line in the horizontal direction. The same scanning voltage was placed on the horizontal deflection plates of another cathode-ray tube, while the output of the phototube was amplified and fed onto the vertical deflection plates of the second cathode-ray tube. A plot of the sensitivity of the photosurface was then obtained along a line across the face of the phototube. This line could be moved to any line across the face of the tube, and plots obtained in this manner were painted on the face of the viewing cathode-ray tube. Reproduction of these plots for two different phototubes are given in Fig. 7. The deep dips in the response curves are caused by opaque patches placed on the face of the phototube for identification purposes.

After a series of these patterns had been outlined on the face of the viewing cathode-ray tube, the photomultiplier dynodes were connected with an appropriate voltage distribution. The voltage distribution on the dynodes that most nearly reproduced the photosensitivity patterns was then sought. No voltage distribution was found that

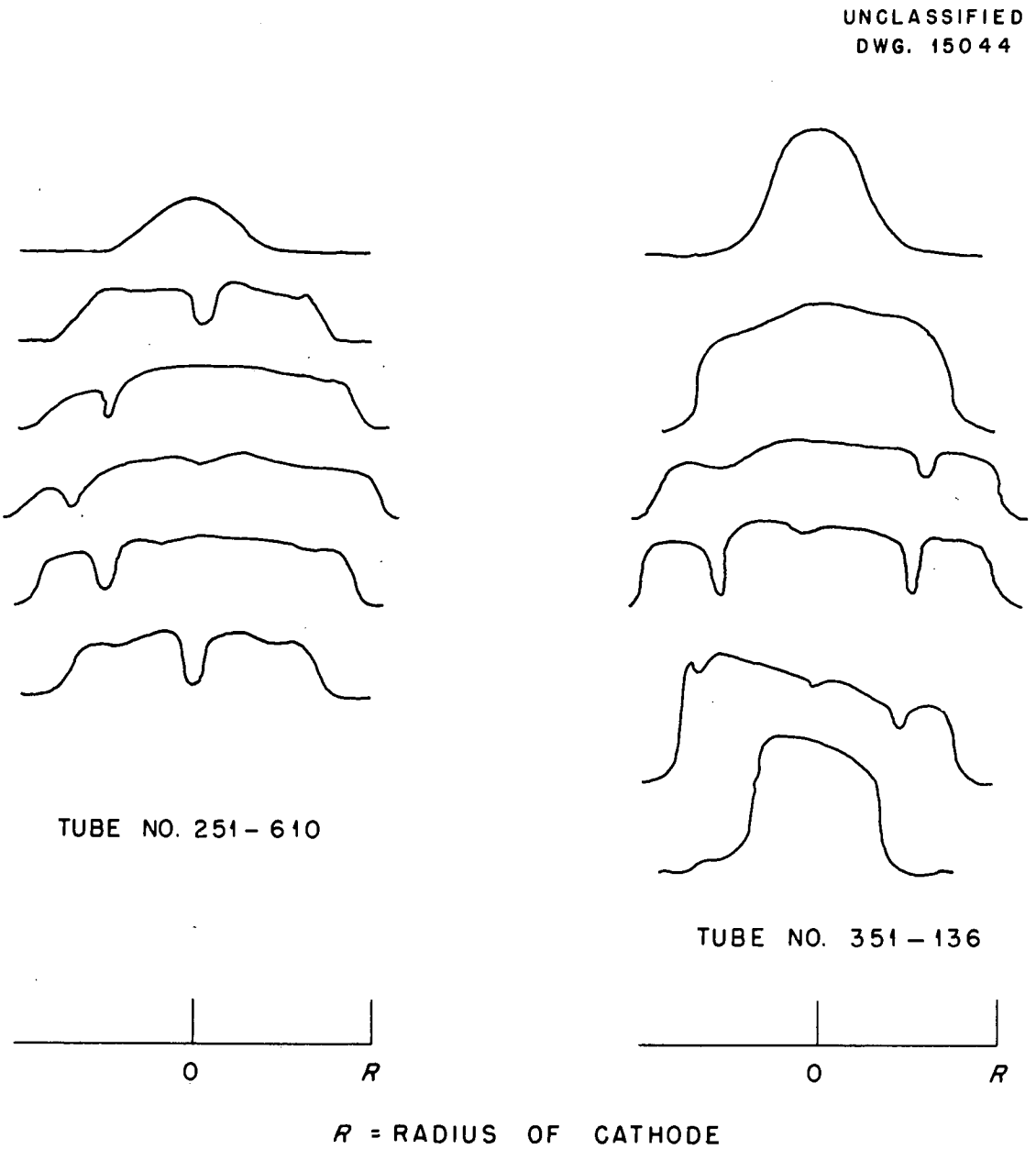

Fig. 7. Photocathode Emission Across the Cathode of Typical 5819 Photomultipliers.

gave the same response as the photosurface. A voltage distribution that gave a good reproduction of the photosensitivity curve along one line across the phototube gave a poor reproduction along another line. After this study was completed the tube was used in a scintillation spectrometer. It was found that the resolution of the spectrometer was greatest for the voltage distribution that was found to reproduce most nearly the photosensitivity patterns.

Another experiment was carried out in an attempt to determine the best

voltage distribution on the dynodes. The dynode voltage distribution was set to that value which gave the best results in the previous experiment. The voltage between the photocathode and the first dynode was then varied, and the peak-to-valley ratio was measured. The over-all voltage on the voltage distribution was adjusted each time so that the photoelectric peak always occurred at the same pulse height. In some cases this meant that the gain of the amplifier had to be increased from 16 to as much as 64. The voltage distribution was indicated as follows:

$$(m, n, p, 1, 1, 1, 1, 1, \ldots) ,$$

where m is the ratio of the voltage difference between the photocathode and dynode 1 and the voltage difference between the last two dynodes, n is the ratio of the voltage difference between dynodes 1 and 2 and the voltage difference between the last two dynodes, etc.

Figure 8 shows three graphs of peak-to-valley ratio, one with m variable, one with n variable, and one with p variable.

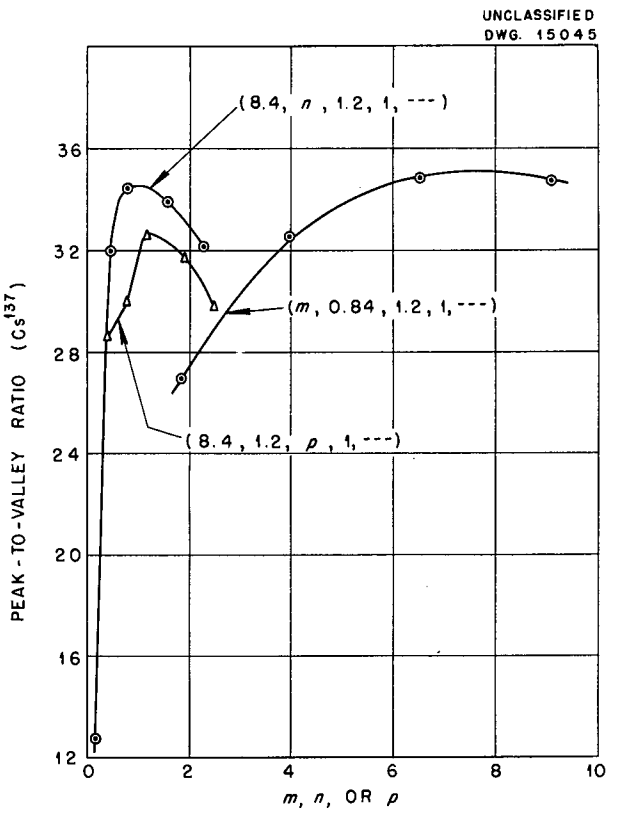

Fig. 8. Resolution of Scintillation Spectrometer as a Function of Collector Voltage and First and Second Dynode Voltages.

EFFECT OF A LONGITUDINAL MAGNETIC FIELD ON THE RESOLUTION OF A 5819-NaI SCINTILLATION SPECTROMETER

W. E. Millet

In an effort to determine whether a magnetic field along the axis of the multiplier would improve the resolution of the scintillation spectrometer, the following experiments were conducted.

Helmholtz coils were mounted on the light shield. The strength and direction of the field were adjusted so that the horizontal component of the earth's field at the place at which the multiplier tube was to operate was cancelled. A magnetized needle floating on water was used as an indicator for the field adjustment.

A solenoid with 120 turns was wound on a form about 2 in. in diameter and about 1 in. long. This coil was fitted over the 5819 multiplier that was mounted with the axis of the tube vertical. The coil then produced a field along the axis of the tube in the region between the photocathode and the multiplier unit.

There was an annoying decrease in the peak-to-valley ratio (Cs^{137}) during the course of the experiment. This may have been caused by a slight heating of the NaI crystal as a result of the current in the solenoid. The experiment was performed three times, and each

time there was an indication that the peak-to-valley ratio was best for solenoid fields of zero and about 1.2 gauss upward, with a minimum at about 0.6 gauss upward. If the vertical component of the earth's field was 0.6 gauss downward, this would indicate that a field of about 0.6 gauss in either direction along the axis of the tube gave best results. The peak-to-valley ratio at ±0.6 gauss was only 3 to 6% higher than it was at zero field (P/v = 32). At about 2 gauss downward the peak-to-valley ratio was down about 10%. This same behavior was noted in all three experiments, even though the order of taking the points on the curve was different in each case.

NEUTRON-SENSITIVE PHOSPHORS

J. Schenck

Crystals of LiI with thallium activation have been shown[4] to respond to thermal neutrons.

In the course of testing the effect of various activators in LiI, it was found that a strong luminescence occurred under ultraviolet excitation when LiI was activated by tin. In order to determine its response to slow neutrons, crystals of this phosphor containing about 0.1 mole % of SnI_2 were grown from the melt. One of these crystals was selected that was about 1 by 0.5 by 0.5 cm, irregular in shape, transparent, and ranging in color from faint yellow to nearly colorless. The crystal was ground smooth on one side and optically connected to a 5819 photomultiplier through a lucite light piper (1 in. dia by 0.5 in. long). White vaseline was used to join the crystal, lucite, and photomultiplier. An aluminum can covering the crystal and clamped with an "O" ring to the lucite served as a reflector and as a means of maintaining the crystal in an atmosphere of dry nitrogen.

The crystal was exposed to uncollimated neutrons from an unshielded polonium-beryllium source. A flux of slow neutrons was obtained by placing a block of paraffin behind the source. The measured photomultiplier pulse-height spectrum is shown in Fig. 9. Even in the presence of the gamma rays and fast neutrons emanating from the source, and in spite of the irregularity and nonuniformity of the crystal, the pulse-height spectrum exhibits a resolution of 15.1% for the monoenergetic excitation of the phosphor from the reaction of the moderated neutrons with the Li^6.

Figure 10 shows the pulse-height spectrum of the same crystal and mounting with the peak caused by photoelectrons from Cs^{137} gamma radiation. A similar spectrum was taken

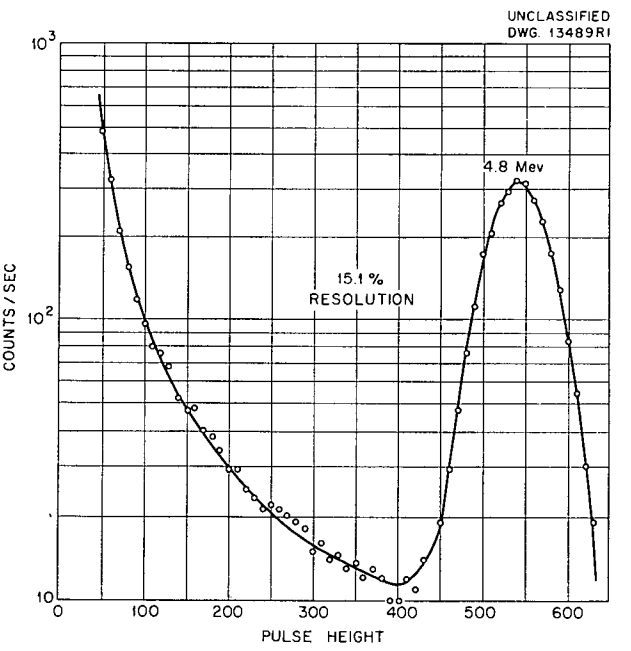

Fig. 9. Pulse Spectrum Produced in LiI (SnI_2 Activated) by Slow Neutrons.

[4] R. Hofstadter, J. A. McIntyre, H. Roderick, and H. I. West, Jr., "Detection of Slow Neutrons," *Phys. Rev.* 82, 749 (1951).

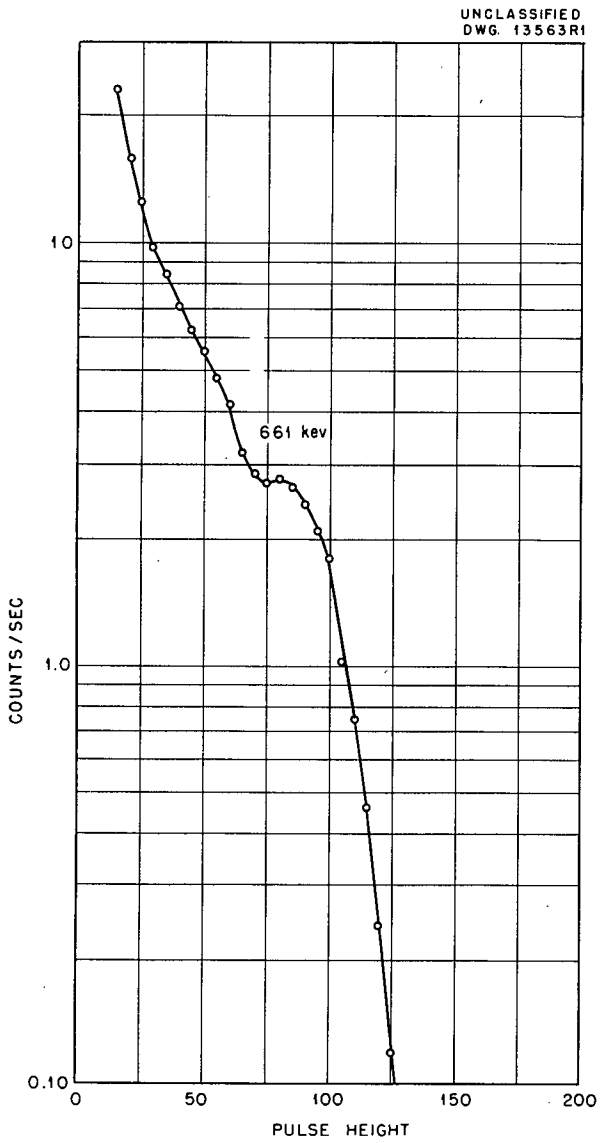

Fig. 10. Pulse Spectrum Produced in LiI (SnI_2 Activated) by Cs^{137} Gamma Rays.

after replacing the LiI-SnI_2 with a NaI-TlI crystal. A comparison of the pulse heights at the photoelectric peaks gives an electron excitation efficiency for LiI-SnI_2 relative to NaI-TlI of 1/24.5. A comparison of the pulse heights with LiI-SnI_2 for Cs^{137} gamma rays and for neutrons, assuming linearity, gives a Q of 4.5 Mev for the $Li^6(n,\alpha)H^3$ reaction, which is 94% of the correct value of 4.785 Mev.

The scintillations produced by neutrons on LiI-SnI_2, which were detected by the photomultiplier, were observed on an oscilloscope, and the decay of fluorescence appeared to be purely exponential with a time constant of about 0.7 μsec.

In addition to the results obtained with LiI, it was found that tin will activate LiBr. A small amount of $SnBr_2$ was mixed with LiBr and melted in a pyrex test tube. After cooling, the white, microcrystalline mass gave a strong, white luminescence under ultraviolet excitation. When placed on the photomultiplier tube and exposed to thermal neutrons, the same sample produced large scintillation pulses that had a decay time constant of about 1.5 μsec. It is planned to grow single crystals of the bromide incorporating a number of different activators.

Investigation of oxygen-containing phosphors was continued, and many more samples, including silicates, titanates, phosphates, and stanates, were prepared and tested. The only good phosphor discovered was Li_2SnO_3 activated with 1 mole % TiO_2. The concentration of titanium could be varied over a range of ten to one without much change in the luminescence. The efficiency, emission spectrum, and decay time were found to be much the same as Ca_2WO_3. Instead of melting, Li_2SnO_3 decomposed when heated in a platinum crucible over a methane-oxygen flame.

The Li_2SnO_3 was prepared by a dry reaction of equimolar proportions of Li_2CO_3 and SnO_2 for several hours at a temperature of 1100°C in an air atmosphere. Since this compound was not found to be reported in the literature

and because there was a question about its existence, an x-ray diffraction pattern was taken of a powdered sample. The pattern gave evidence of a definite structure and showed only a small trace of unreacted SnO_2 and no lines corresponding to Li_2O or Li_2O_2. The comparatively simple diffraction spectrum suggested the presence of a single phase.

NEUTRON RESPONSE OF NaI SCINTILLATION COUNTERS

J. K. Bair H. B. Willard

In the attempt to measure the gamma-ray yield from the $Li^7(p,\gamma)Be^8$ reaction, it was discovered that the NaI crystal scintillation counter does not have negligible sensitivity for low-energy neutrons (~ 30 to 100 kev). When biased to count all gamma pulses above 2 to 3 Mev, the yield curve followed very closely that of the $Li^7(p,n)Be^7$ reaction, exhibiting a geometric peak and the resonance at 2.25 Mev. The spectrum analysis indicates that this response is caused by gamma rays of ~ 8 Mev, presumably from neutron capture in the iodine. This capture cross section decreases with increasing neutron energy as was evidenced by the relative heights of the geometric peak and the 2.25-Mev resonance. For 30-kev neutrons, the efficiency for neutron capture seemed to be about 1% of that for gamma rays of equivalent energy.

CHEMISTRY DIVISION

A NEW LINEAR AMPLIFIER FOR SCINTILLATION SPECTROMETRY

E. Fairstein

The basic developmental work on a new amplifier has been completed and a model is now being constructed. The novel feature of the amplifier is the pulse shaper. The shaper consists of two identical, shorted, delay lines. The lines are cascaded at the input of the amplifier and cause the output-pulse shape to be the second derivative of the photomultiplier voltage pulse. On an oscilloscope the output is a flat-topped pulse of approximately 0.6-μsec duration followed by an undershoot of equal amplitude and duration. The advantages of this pulse shape over the usual one will become apparent from the following discussion.

In the usual RC-coupled pulse amplifier, the time constant of one of the coupling networks is made very much smaller than that of any of the others. If the usual detector pulse is applied to such an amplifier, the output pulse will have a rapid rise and a longer exponential decay. The rate of decay will depend upon the time constant of the smallest coupling network. The pulse will also undershoot the base line. The peak amplitude of the undershoot compared with the peak of the first part of the pulse will never exceed the ratio of the shortest time constant to the next shortest, but it will approach it for time-constant ratios less than 0.05. Since an RC-coupled amplifier can pass no direct current, the long-time average of any given pulse must be zero – that is, the integrated area of the pulse on one side of the line must be numerically equal to that on the other. It is evident that a pulse whose peak undershoot is small compared with that of the primary pulse must be of long duration compared with that of the primary pulse.

Under actual counting conditions where pulses occur at a random rate, it is a common situation for pulses to occur in the troughs of the undershoot of earlier pulses. These pulses will appear to have lower amplitudes than those of their neighbors. It can also be observed that the average value of all the pulses appears smaller than their true average value by an amount that is numerically equal to the duty cycle of the counting process, where the duty cycle is defined as the ratio of the total measured primary pulse area to the total possible primary pulse area for a unit time interval of measurement. As a consequence of these effects, if an attempt is made to obtain the pulse height distribution of a monoenergetic emitter, for example, it is found that as the counting rate increases the peak will broaden and shift toward the zero-energy axis.

It appears that the only solution to the problem is the extreme of making the undershoot as large as the primary pulse. When this is done, the duration of the undershoot is the same as that of the primary pulse. The operating conditions of the counting system can be chosen so that a pulse is either recorded correctly, or not at all. The dead time of the system need not be more than twice that of the older method using the same primary pulse width, and the usable counting rate can probably be increased by a factor of 10 or more.

The signal shaping can be accomplished by RC, LC, or delay-line networks. Delay-line networks give much better results than the RC or LC networks and are being used in the present amplifier. No difficulties with reflections are experienced if care is taken in termination. The expected characteristics of the new amplifier are as follows:

Primary pulse width - 0.6 μsec

Maximum dead time - less than 2.0 μsec

Dynamic range - greater than 300 to 1

Blocking characteristics - nonblocking

Output-pulse height - 100 volts into 1000 ohm or greater load

Pulse-height selector - built-in, single-channel, differential discriminator

Gain - 50,000

Preamplifier - gain of one may be used with 100 ft of 100-ohm cable without pulse-shape degradation

Usable counting rate - depends upon permissible counting loss. There will be no energy spread or base-line shifts with high counting rates or loads

A LOGARITHMIC SWEEP CIRCUIT FOR USE IN PULSE-HEIGHT ANALYSIS

E. Fairstein

A photographic method for determining the energy distribution of a radioactive source has been known for some time. The radiations from the sample are converted to electrical pulses whose amplitudes are proportional to the energy of the radiations. The pulses are shaped to have a flat top and are then applied to the Y-axis terminals of an oscilloscope. A linear sweep is triggered by each of the pulses. The controls are set so that the pulses appear on the screen as a series of straight lines parallel to the X-axis. A light filter is then placed over the screen, and a long-time exposure photograph is taken of the pulses. The characteristics of the filter are such that the rate of light absorption in the X direction increases logarithmically. The absorption in the Y direction is constant. Evidently, those regions where the pulse rate is high will appear to

penetrate further into the area of high absorption than those regions where the pulse rate is low. On the finished photograph, a light contour will represent a graph of pulse rate vs. pulse amplitude. The pulse amplitude corresponds to the *Y*-axis displacement, and the logarithm of the pulse rate corresponds to the *X*-axis displacement. If high-contrast film is used and successive copies of the photograph are made on high-contrast film or paper, a line of demarcation between regions of high and low light intensity will be quite apparent. This line represents the desired contour of pulse rate vs. amplitude.

The most serious limitation to the technique is the problem of obtaining sufficient light intensity for a good photograph in a reasonably short-time exposure. It was suggested by H. Zeldes that this limitation could be overcome by using a logarithmic sweep for the *X*-axis rather than an absorption filter over the face of the cathode-ray tube. In the case of a two-cycle sweep, the improvement in light intensity is approximately fiftyfold.

A unit was built that provides the necessary sweep voltage and offers the user some additional conveniences as well. A counting circuit is included to disconnect the input after a predetermined number of pulses have been recorded. The number can be set for 1,000, 2,000, 5,000, or 10,000 pulses. This is necessary for producing identical exposures of samples with different disintegration rates. A flat-topped pulse is provided to turn on the cathode-ray tube beam at the start of the sweep. A pulse stretcher is provided so that the pulses from an A-1 amplifier may be properly shaped. The sweep duration can be set for 5, 10, 25, or 50 microseconds. Two cycles are displayed for all sweep-duration settings. The pulse-stretching time and the beam-gate duration are also controlled by the setting of the sweep-duration switch. A pulse-height selector is provided to suppress the zero of a pulse-height distribution.

The unit has been tested electrically, but no photographic measurements have yet been made with it.

PHOTOMULTIPLIER DETECTION OF IONIZING EVENTS IN A GAS

R. Stone C. J. Borkowski

Energy in the form of light quanta is emitted when an ionized or excited atom of a gas drops to a lower level of excitation. An investigation is being made of the feasibility of detecting ionizing events in gases by the measurement of this light.

The method has been to attach an end-window photomultiplier to a gas chamber containing an alpha source. A suitable gas is continuously passed through the chamber. When argon is used, nearly 100% of the alpha particles passing through the gas is detected.

Only in monatomic gases has sufficient light been emitted to observe single alpha ionizing events. The pulse height in neon is about twice that in helium, and in argon it is three times that in helium. Since the alpha particle range exceeded the chamber dimensions when helium and neon were used, the relative pulse heights do not indicate the relative light production in the gases for equivalent alpha-energy expenditure.

All the pulses are small, with those in argon giving about 1/500 the height of sodium iodide pulses for the same dissipation of energy. About 100-kev alpha-energy dissipation in argon is required to release a single photoelectron from the photocathode.

A considerable amount of self-absorption of light apparently takes

place in the counting gas, since the largest pulses are obtained when the sample can be collimated so that the ionization takes place quite close to the photocathode. A very small amount of air or polyatomic gas is sufficient to quench all pulses. The quenching action is similar to that which takes place in a Geiger-Mueller counter discharge.

In a single check, little difference was found between the response of a type-5819 photomultiplier (down 90% at 3000 Å) and a type-C-7140A photomultiplier (down 90% at 2200 Å) when the tubes were equalized for the same peak response. This result could be expected because of the wide emission spectrum of argon.

Figure 11 was drawn from an oscilloscope record of the gas pulses, by using a sweep speed equal to 0.1 μsec/cm. The general pulse shape is shown and a rise time of about 0.15 μsec is indicated. Considerably more light would be emitted if lower pressures of gas could be used, since, at atmospheric pressure, excited argon atoms lose a large fraction of their energy in thermal collisions with neighboring atoms before photon emission takes place. Because of the small amount of light emitted, practical application of the detection of ionizing particles by this method is limited to densely ionizing events produced by alpha particles, fission fragments, and high atomic number cosmic-ray particles. Possible applications might be the assay of intense sources of polonium or the counting of fission pulses in the presence of intense alpha and beta activity. For example, a fission counter of this type might be considered for use as a neutron-flux monitor in a reactor. The light could be piped out to an external photomultiplier, and thus the electrical leads to conventional detectors, such as pulse ion counters could be eliminated. Furthermore, no deterioration of the gas would be expected, as would be the case if organic or inorganic phosphors were used.

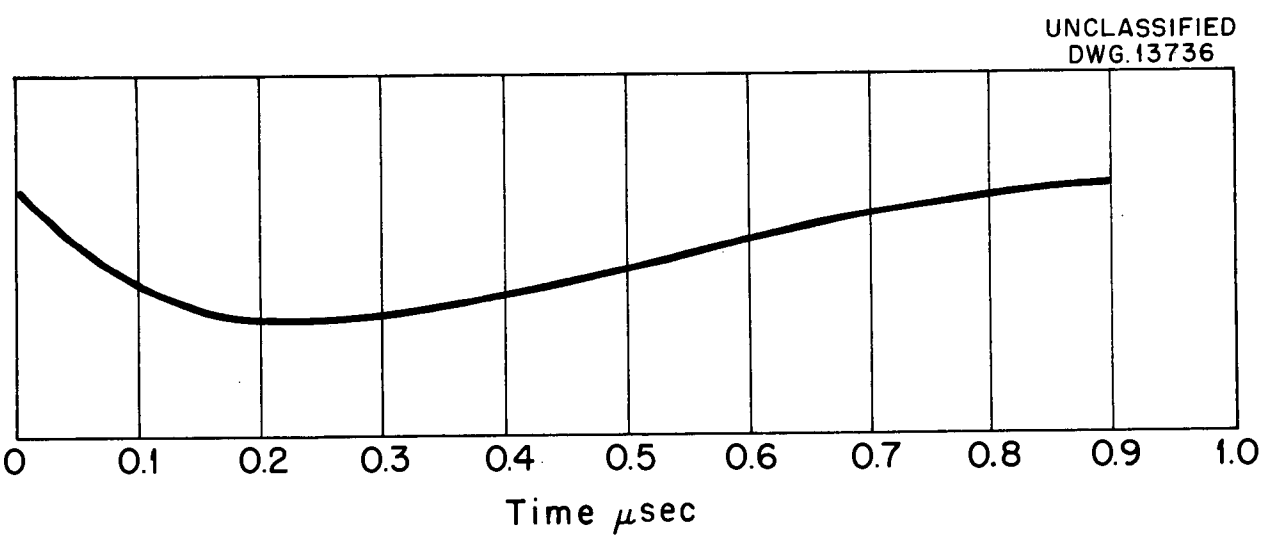

Fig. 11. Typical Shape of Gas Pulse.

INSTRUMENT RESEARCH AND DEVELOPMENT REPORT

HEALTH PHYSICS DIVISION

LOW-LEVEL MEASUREMENTS OF RADIOACTIVITY IN WATER

J. M. Garner O. W. Kochtitzky
R. A. Lauderdale

The development and use of a column type of water monitor that employs a 10-in. glass Geiger-Mueller tube surrounded by a bed of ion-exchange resin has been continued. This device is now being used to measure activity levels of natural ground and surface waters and of rain water collections in the vicinity of Oak Ridge. Experience with it has been amplified by the counting of more than 150 such water samples. It is capable of measuring activities in the order of 10^{-7} μc/ml in the absence of large quantities of nonradioactive soluble salts.

INSTRUMENT DEPARTMENT

HIGH-VOLTAGE ACCELERATOR PROGRAM

R. F. King A. W. Prichard
R. W. Bennett H. Reese
H. E. Banta

Stabilization of the terminal voltage of the 2-Mev Van de Graaff generator has been completed. This is a servo system that samples the energy of the output beam of the machine and feeds back a signal which controls the terminal voltage. Also, much time and energy has gone into investigation of commercially available Cockroft-Walton machines for installation in the new High-Voltage Building.

Design of a slide-type valve has been completed and an initial model produced.

Installation of an RF ion source on the Cockroft-Walton machine at the Bulk Shielding Facility has been completed, and the first neutrons have been produced at this facility. This machine gives a deuteron beam of about 100 μa at an energy of about 200 kev. Zirconium tritide targets have been produced up to a maximum thickness of about 250 mg/cm^2.

FLUOROPHOTOMETER, Q-1165

D. M. Collier

The fluorophotometer, Q-1165, was designed primarily to determine the quantity of uranium present in liquid or solid samples. This is accomplished by measuring the intensity of fluorescence from the sample by employing a constant-intensity, ultraviolet, exciting source and a vacuum-tube voltmeter measuring device.

It has been well established that the fluorescent intensity of uranium fluxed with sodium fluoride is proportional to the quantity of uranium present when a constant-intensity source of ultraviolet light is used for excitation. The fluorescence is characteristically at a longer wavelength than the source of excitation. Therefore, in the fluorophotometer the light from two 100-w mercury-arc lamps is filtered by the primary filter to allow only ultraviolet light to strike the sample. The primary filter passes light of wavelengths of from 3200 to 3900 Å, with a maximum of about 32% transmission at 3600 Å. Fluorescence of the sample occurs at a wavelength

of approximately 5550 Å. The secondary filter allows wavelengths longer than 5100 Å to strike the photomultiplier tube, with about 80% transmission at 5550 Å. The photomultiplier tube transforms the light energy into a proportional electrical current whose magnitude is measured with the vacuum-tube voltmeter.

The new instrument has several decided advantages over preceding models. Its photomultiplier tube is located directly over the sample and is as close to the sample as possible. This makes the tube subtend a rather large solid angle with respect to the sample, which contributes to the efficient collection of the fluoresced light. Similarly, the mercury lamps, one on each side of the photomultiplier tube, are located quite close and as nearly vertical to the sample as the geometry will allow. The net result of this configuration is that many of the optical accessories ordinarily used in such instruments are eliminated.

The range of the fluorophotometer will allow measurements of about 10^{-10} to 10^{-5} g of uranium. Furthermore, the measurements with it are reproducible to less than 1%. By use of multirange scales on the meter and precision resistors in the grid circuit of the vacuum-tube voltmeter, current readings may be taken directly. By limiting the range of the instrument slightly, it can be adjusted to give meter readings directly in uranium weight, thus eliminating the necessity for a calibration curve.

A MEDIUM-POWER FREQUENCY CONVERTER

W. G. James

A medium-power frequency converter supplies a 10-cps signal for use in the investigation of the electromagnetic-induction flowmeter. A line voltage of 60 cps is applied to an isolating transformer, the output of which is fed through a mercury contact relay to the magnet coil of the flowmeter. The output is also connected to the rectifier and filter network for the electronic circuits employed.

The mercury contact relay is pulsed at the rate of 50 pulses per second by the multivibrator and the adjoining relay-driver amplifier. The pulse duration is of the order of 3 milliseconds. Thus, a chopped signal containing the sum and difference frequencies appears at the magnet coil. A condenser is connected across the magnet coil of the correct value of capacitance to produce resonance at the 10-cps difference frequency. This signal contains the basic pulses from the mercury switch; but these pulses appear only as a ripple, since the amplitude is low owing to the low resonant frequency of the resonant circuit made by the coil-condenser combination.

The relay must carry a relatively high current in the system, therefore, careful selection of a relay was necessary. Western Electric mercury contact relays were selected, since they have high-peak current handling capabilities and can be actuated up to 100 times per second. Preliminary investigation indicated that better operation could be obtained if the dwell time of the relay contacts was considerably less than the open time. The multivibrator was designed to provide a signal with these characteristics. It was found that if the dwell time of the relay is approximately 3 msec, the conversion efficiency is at a maximum. For the frequencies used, the efficiency was about 85%. Successful operation was obtained at a number of frequencies below 60 cycles by changing the pulsing frequency of the multivibrator.

INSTRUMENT RESEARCH AND DEVELOPMENT REPORT

A PORTABLE FAST-NEUTRON SURVEY INSTRUMENT, Q-1238

H. N. Wilson F. M. Glass

G. S. Hurst and R. H. Ritchie of the Health Physics Division have developed a portable fast-neutron proportional counter, Q-1238, that has a sensitivity to fast neutrons approximately equal to the first-collision dose curve. The counter described herein has been made fairly insensitive to gamma radiation, which makes it possible to bias out the gamma pulses. This results in fixing the low-energy limit for fast neutrons to a value between 200 and and 250 kev. The counters, which were constructed by the Instrument Department at ORNL, have been tested for neutron energies as high as 14 Mev. The early models contained paraffin as the solid hydrogeneous material. In later models, the paraffin was replaced by polyethylene. This allows for easier, more durable construction.

It is possible with this special counter to measure neutron tissue doses by conventional counting-rate methods. A prototype instrument has been built that contains a detector, a vibrator-type high-voltage power supply, a stable amplifier, a counting-rate meter, and an integrator. A phone jack is provided on the instrument for ear phones that permit aural monitoring. The pulse integrator is needed for the extremely low counting rates that are normally encountered and is designed so that integration of 200 counts will cause the meter to read full scale.

The instrument is constructed in two sections connected by a flexible cable. This arrangement makes the instrument easier to handle, since the detector is directional; and it serves to protect the surveyor when neutron beams are to be measured.

CONDENSER-TYPE IONIZATION CHAMBERS, Q-1033-2

R. K. Abele

Two condenser-type ionization chambers, Q-1033-2, have been built for measuring gamma radiation in a fast-neutron field. One uses bismuth as the electrode material and fluorothene as the insulating material, whereas the other is constructed of lead and fluorothene. The chambers are concentric cylinders, and use is made of their intrinsic electrical capacitance in measuring the gamma-ray dosage in terms of roentgens. The over-all size of the chambers is approximately 5/8 in. OD and 2 1/2 in. long. They have a capacitance of approximately 30 $\mu\mu$f and can thus be used in the range of 0 to 30 roentgens. The chambers are charged by a Victoreen electrometer, which is normally used with the Victoreen r-meter. An experienced operator who is aware of the leakage and dust problems connected with this type of device can interpret readings to an accuracy of ±5%. Additional information covering a device such as this can be found in ORNL-1003,[1] in which a similar chamber, made of beryllium, is described.

X-RAY DIFFRACTION SPECTROMETER, Q-1147

D. J. Knowles

Commercial x-ray spectrometers usually consist of an x-ray tube and motor-driven goniometer arrangements that scan x-ray beams through large angles of diffraction. After being diffracted from the sample an x-ray beam is detected by a Geiger-Mueller tube, and spectrum lines show up as peaks of counting rate that are recorded on a strip-chart recorder.

---

[1] E. B. Darden, Jr., C. W. Sheppard, and L. C. Emerson, *Gamma-Ray Contamination in the Thermal Neutron Exposure Facility of the Oak Ridge Reactor*, ORNL-1003 (Sept. 6, 1951).

The Q-1147 x-ray diffraction spectrometer contains the mechanical and electronic modifications necessary for use with highly radioactive samples. For example, its sample holder is remotely controlled so that the entire mechanical assembly can be placed in a cell and the sample inserted by means of a manipulator. The spectrometer is made to use double reflection of the x-ray beam so that lead shielding can be placed between the samples and the counter. This is done to prevent jamming of the Geiger-Mueller tube by high gamma-ray background from the sample. Also, the counter is immersed in 2 in. of lead shielding to protect it further from back-scattering. Scanning with the x-ray tube and keeping the counter fixed is the preferred method.

A proportional counter is used in the Q-1147 spectrometer instead of the Geiger-Mueller tube described earlier, and the counter is followed by an amplifier and a differential pulse-height detector. Background counts will be rejected in this apparatus unless they coincide with the x-ray energy, because all the pulses from the x-ray beam will be the same, since it is essentially monoenergetic. The counter is specially designed to have efficiency for low-energy x-rays, such as those produced by iron or copper targets, and poor efficiency for cosmic radiation. Also included in the design are the necessary regulated power supplies, a counting-rate meter, a scaler, a Brown Electronic potentiometer recorder, and controls for the sample holder. When nonradioactive samples are used, the background count is nil.

The present experiment with this apparatus by the Solid State Division involves low counting rates and no background. This experiment will serve to put the apparatus in smooth working order before it is set up as a remotely controlled facility in a cell.