[redacted]

CENTRAL RESEARCH LIBRARY

MARTIN MARIETTA ENERGY SYSTEMS LIBRARIES
3 4456 0250919 5

ORNL-1273 cy. 6w
Reactors-Research and Power

DECLASSIFIED
CLASSIFICATION CHANGED TO:
BY AUTHORITY OF: GDC 11-28-67
BY: Carbermeter 8/2/68

LABORATORY RECORDS 1964

BACKGROUND CALCULATIONS FOR THE PROPOSED TOWER SHIELDING FACILITY

OAK RIDGE NATIONAL LABORATORY
OPERATED BY
CARBIDE AND CARBON CHEMICALS COMPANY
A DIVISION OF UNION CARBIDE AND CARBON CORPORATION
UCC
POST OFFICE BOX P
OAK RIDGE, TENNESSEE

[redacted]

[redacted]

ORNL-1273

This document consists of 61 pages.
Copy 6 of 162 copies. Series A

Contract No. W-7405-eng-26

BACKGROUND CALCULATIONS

FOR THE

PROPOSED TOWER SHIELDING FACILITY

A. Simon and R. H. Ritchie

Date Issued

OCT 15 1955

[redacted]

Operated by
CARBIDE AND CARBON CHEMICALS COMPANY
A Division of Union Carbide and Carbon Corporation
Post Office Box P
Oak Ridge, Tennessee

MARTIN MARIETTA ENERGY SYSTEMS LIBRARIES

3 4456 0250919 5

[redacted]

INTERNAL DISTRIBUTION

1. G. T. Felbeck (C&CCC)
2. Biology Library
3. Health Physics Library
4. Metallurgy Library
5-6. Training School Library
7. Reactor Experiment Engineering Library
8-13. Central Files
14. C. E. Center
15. C. E. Larson
16. W. B. Humes (K-25)
17. L. B. Emlet (Y-12)
18. A. M. Weinberg
19. E. [illegible] Taylor
20. E. D. Shipley
21. A. H. Snell
22. F. C. VonderLage
23. R. C. Briant
24. J. A. Swartout
25. S. C. Lind
26. F. L. Steahly
27. A. Hollaender
28. T. Kelley
29. G. [illegible] Clewett
30. K. Z. [illegible]
31. J. S. Felton
32. A. S. Householder
33. C. S. Harrill
34. C. E. Winters
35. D. S. Billington
36. D. W. Cardwell
37. E. [illegible] King
38. O. Wollan
39. A. J. Miller
40. R. B. Briggs
41. L. D. Roberts
42. R. N. Lyon
43. W. C. Koehler
44. W. K. Ergen
45. E. P. Blizard
46. M. E. Rose
47. D. D. Cowen
48-50. [illegible]
51. R. H. [illegible]

EXTERNAL DISTRIBUTION

52-62. Argonne National Laboratory
63. Armed Forces Special Weapons Project (Sandia)
64-71. Atomic Energy Commission, Washington
72. Battelle Memorial Institute
73-75. Brookhaven National Laboratory
76. Bureau of Ships
77-78. California Research and Development Company
79-84. Carbide and Carbon Chemicals Company (Y-12 Area)
85. Chicago Patent Group
86. Chief of Naval Research
87-91. duPont Company
92-94. General Electric Company (ANPP)
95-98. General Electric Company, Richland
99. Hanford Operations Office
100-106. Idaho Operations Office
107. Iowa State College
108-111. Knolls Atomic Power Laboratory
112-114. Los Alamos
115. Massachusetts Institute of Technology (Kaufmann)
116. Massachusetts Institute of Technology (Benedict)
117-119. Mound Laboratory
120. National Advisory Committee for Aeronautics, Cleveland
121. National Advisory Committee for Aeronautics, Washington
122-123. New York Operations Office
124-125. North American Aviation, Inc.

SECRET
SECURITY INFORMATION

[redacted]

[redacted]

126. Nucl[redacted]r Development Associates [redacted]DA)
127. Patent [redacted]nch, Washington
128. Rand Corp[redacted]on
129. Savannah Riv[redacted]eratio[redacted]ffice (Augusta)
130. Savannah River O[redacted]s Office (Wilmington)
131-132. University of Cali[redacted] Radiation Laboratory
133. Vitro Corporation [redacted] Ame[redacted]
134-137. Westinghouse E[redacted]ric Corpo[redacted]n
138-147. Wright Air D[redacted]opment Center ([redacted]pies to Convair, 1 copy dir[redacted]d to H. E. Stern and 1 copy to C. H. Bernard)
148-162. Technical [redacted]formation Service, Oak Ridge

[redacted]

[redacted]

TABLE OF CONTENTS

I. INTRODUCTION 1

II. GROUND SCATTERING 3

A) Uncollided Ground Scattering At the TSF 5

B) "Air-Collided" Contributions to Ground Scattering 11

C) Diffusion Calculation of Ground Scattering 15

D) Effect of Thinning Down the Shield 21

E) The Single Tower 26

F) The Igloo 27

G) Possible Use of the I. E. T. for Air Scattering Measurements 36

III. STRUCTURAL SCATTERING 38

A) Tower Scattering 38

B) Aircraft Structure Scattering 42

IV. ACKNOWLEDGMENT 46

V. REFERENCES 47

VI. APPENDICES 48

A) Theoretical Evaluation of the Albedo 48

B) Effects of Preferential Forward Scattering and Air Attenuation 52

[redacted]

[redacted]

BACKGROUND CALCULATIONS

FOR THE

PROPOSED TOWER SHIELDING FACILITY

I. INTRODUCTION

Calculations of the dose arriving at the crew box from a divided shield are difficult and uncertain due to a lack of detailed information about neutron and γ-ray cross sections for air. In addition, measurements of the flux and angular distribution of radiations leaving the reactor shield exterior cannot be easily obtained in existing facilities. Finally, the cumbersomeness of the calculations makes the method totally unsuited for shield optimization. As a result it seems necessary to devise a facility which is suitable for large scale testing of divided shields. A proposal for such a facility has been made[1] and the necessary arguments are given there in greater detail.

In brief, the proposed facility consists of two 300-ft. high steel towers joined at the top by a horizontal steel bridge which is 200-ft long. At the center of this bridge and placed at right angles to it is a 100-ft. long horizontal steel cross-member which extends out 50 ft. in each direction. The reactor and crew box will be suspended from either end of this cross piece. A drawing of this facility is shown in Fig. 1.

In order that background-free measurements of air scattering can be achieved it is necessary that the reactor and crew box be at a sufficient height above the ground so that the ground reflected flux of neutrons and γ-rays is small compared to the air-scattered flux. In addition, the scattering from the tower structure itself must be small compared to the air scattering. It is the purpose of this report to indicate the calculations which were used to evaluate these effects and fix the specifications for the tower. In addition, calculations for some alternate proposals which were not adopted and calculations of structure scattering in a B-36 are discussed.

[redacted]

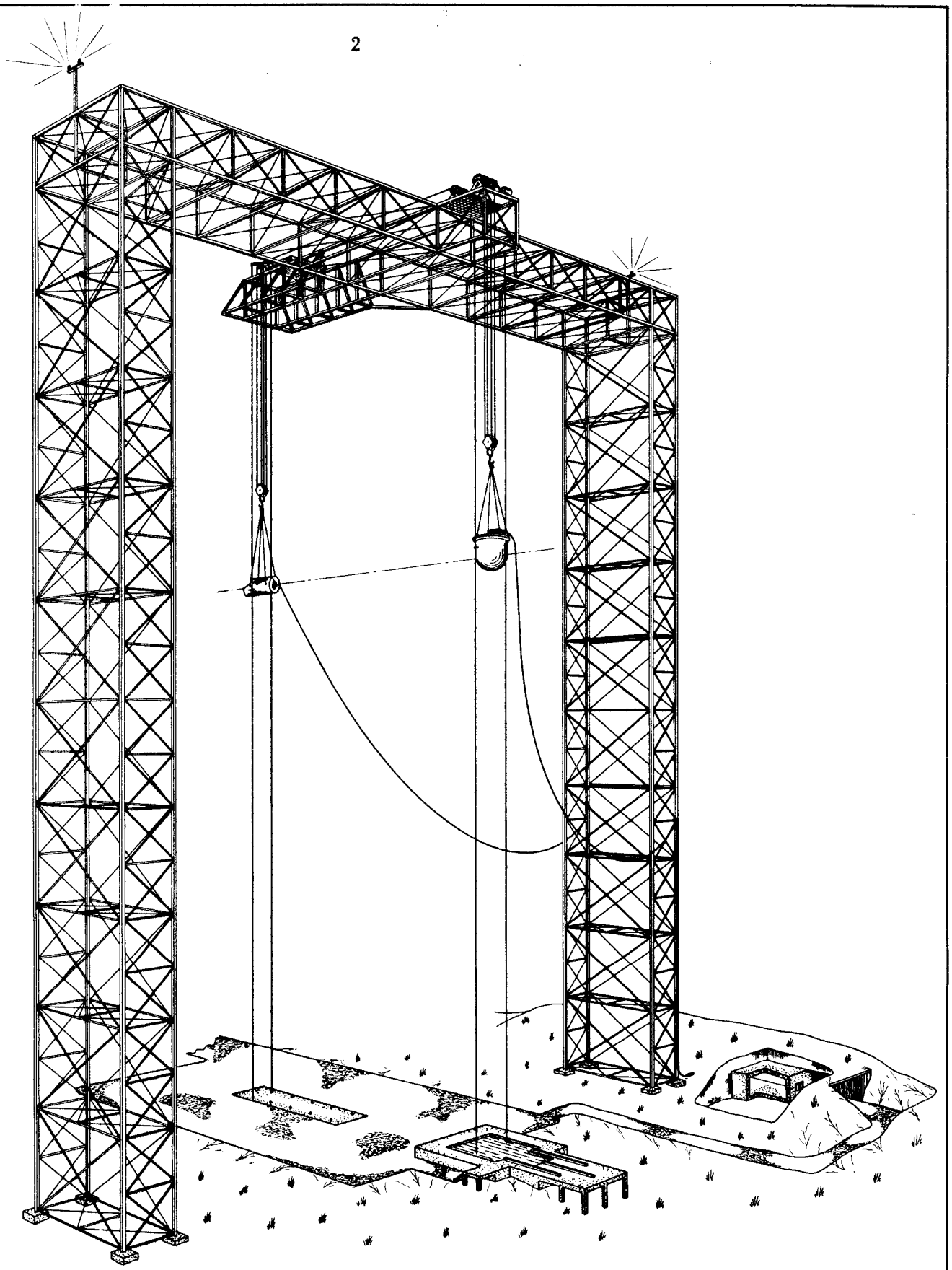

PERSPECTIVE
ACCESS STAIRS OMITTED

Fig. 1

PERSPECTIVE
TOWER SHIELDING FACILITY
OAK RIDGE NATIONAL LABORATORY
DRAWING Q

C-12117

[redacted]

II. GROUND SCATTERING

The flux at the crew box due to neutrons or γ-rays which have been reflected from the ground can be calculated by an "albedo" approach[2-4]. The ground is assumed to reradiate a flux which is proportional to the flux incident upon it. This constant factor of proportionality is the albedo and is determined from experiment. The reradiated flux is assumed to emerge with either an isotropic or a cosine distribution about the normal to the ground.

In this report the following values of the albedo will be used:

$$\alpha_n = 0.2 \qquad \alpha_\gamma = 0.04. \tag{2.1}$$

The relevant experiments that were used to determine these quantities are described by Hungerford[5]. It will be noted in Ref. (5) that the final value of α_n is 0.12 which is smaller than used in Eq. (2.1). The value given in Eq. (2.1) was a preliminary result and has been used unchanged throughout this report as an added factor of safety. In Appendix A, a theoretical calculation is presented which tends to confirm Hungerford's results.

All neutron results are given in terms of percentage background relative to the air scattering itself which is taken to be

$$F_A = 1.2 \times 10^{-9} N_0 \text{ n/cm}^2\text{/sec} \tag{2.2}$$

at a standard reactor-crew box separation of 65 ft. Here N_0 is the total (isotropic) source strength. This somewhat low (and hence pessimistic with regard to background predictions) figure is arrived at as follows. In Section II B it is shown that the air scattering from a point source of strength N_0 to a milligoat (non-directional detector) at a distance d is given by

$$F_A = \frac{N_0 \pi}{16 \lambda d} \tag{2.3}$$

where λ is the scattering mean free path in air. This formula omits the effects of air attenuation as well as preferential forward scattering. If one assumes λ = 130 meters, as in ANP-53,

$$F_A = 7.6 \times 10^{-9} N_o \ n/cm^2/sec$$

at a 65-ft separation. This number should be reduced by a factor of 2 if the milligoat is taken to be near the walls of a crew box since half of the air scattering is then shadowed out. In addition, the effect of preferential forward scattering is to reduce the dose by about another factor of 2. This point is discussed more fully in Section II B and in Appendix B. Finally since there is some attenuation in air and since the mean free path is no less than 130 meters and may be higher it seemed reasonable to use (2.2) as the standard value.

In Section II A an expression is derived for the "uncollided" ground reflected flux observed at the proposed tower shielding facility (hereafter referred to as the TSF). The term "uncollided" refers to the ground scattered flux due to those neutrons which travel directly from the source to the ground and then reflect directly back to the crew box. At tower heights of several hundred feet, such as will be seen to be needed in this facility, the contribution to ground scattering of neutrons which scatter once or more in air either before hitting the ground or after can no longer be neglected. The effect of these collisions is considered in Section II B. Section II C considers the diffusion limit of this problem.

The actual divided shield will be thinned down in the rear in order to optimize the shield weight. Owing to the fact that some regions of the ground contribute more strongly to scattered background than others, it is possible that this shield thinning may seriously increase the background. The effect of this thinning on the TSF is considered in Section II D.

The uncollided ground-scattered flux for a vertical tower arrangement is calculated in Section II E and that for an "igloo" configuration in Section II F. The effect of thinning down on the igloo and on the possible use of the IET for a test is also considered here.

A) Uncollided Ground Scattering at the TSF

For the proposed tower a geometry such as shown in Fig. 2 is applicable. Both the reactor (R) and the crew box (C) are at a distance h above the ground.

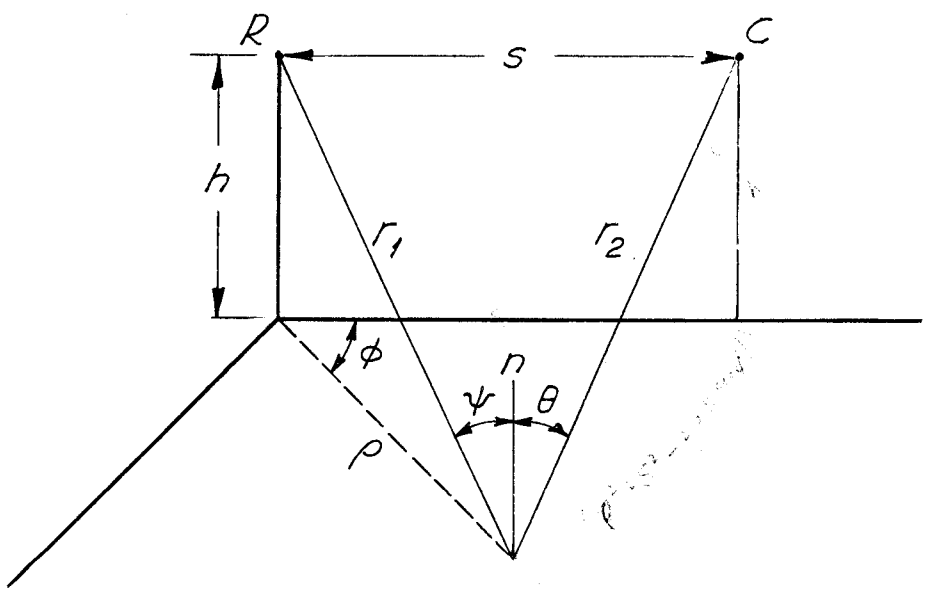

TOWER GEOMETRY
Figure 2

They are separated by a distance s. The normal uncollided flux of neutrons incident upon an element of ground $d\sigma$ at a point specified by the coordinates (ρ, Φ) is then

$$\frac{dF_G}{d\sigma} = \frac{N_o}{4\pi r_1^2} \cos\psi \, e^{-\Sigma r_1} = \frac{N_o h}{4\pi r_1^3} e^{-\Sigma r_1}$$

where Σ is the macroscopic neutron cross section in air. If α is the albedo of the ground, the flux observed at C is then:

$$\frac{dF_c}{d\sigma} = \frac{N_o h}{4 \pi r_1^3} \frac{\alpha}{2 \pi r_2^2} \cdot \left\{ \frac{1}{2 \cos \theta} \right\} e^{-\Sigma(r_1 + r_2)} \tag{2.4}$$

where the choice of either an isotropic or a cosine reradiation has been indicated. The total flux at C is obtained by integrating over the entire ground. The integral can not be done analytically in its present form. However, a simple approximation ($s/h = o$) leads to a very accurate result in the regions of interest.

As a first step in the justification of this approximation, the air attenuation is neglected entirely. Thus the exponential is replaced by unity in Eq. (2.4). The resultant flux in the isotropic case is now:

$$F_c = \frac{N_o h \alpha}{8 \pi^2} \int_0^\infty \rho \, d\rho \int_0^{2\pi} d\Phi \frac{1}{(\rho^2 + h^2)^{3/2} \left[h^2 + \rho^2 + s^2 - 2\rho s \cos \Phi\right]}.$$

The integral over Φ is easily done since

$$\int_0^{2\pi} \frac{d\Phi}{A + B \cos \Phi} = \frac{2 \pi}{\sqrt{A^2 - B^2}}$$

$$F_c = \frac{N_o h \alpha}{4 \pi} \int_0^\infty \frac{\rho \, d\rho}{(\rho^2 + h^2)^{3/2} \sqrt{\rho^4 + 2 \rho^2 (h^2 - s^2) + (h^2 + s^2)^2}}.$$

Making the substitutions $\rho = h \tan \theta$ $\quad \delta = s^2/h^2$, this becomes

$$F_c = \frac{N_o \alpha}{4 \pi h^2} \int_0^{\pi/2} \frac{\sin \theta \, d\theta}{\sqrt{\tan^4 \theta + 2 \tan^2 \theta (1 - \delta) + (1 + \delta)^2}}$$

$$= \frac{N_o \alpha}{4 \pi h^2} \int_0^1 \frac{\cos^2 \theta \, d(\cos \theta)}{\sqrt{\sin^4 \theta + 2 \sin^2 \theta \cos^2 \theta (1 - \delta) + \cos^4 \theta (1 + \delta)^2}}$$

$$\therefore F_c^{iso} = \frac{N_o \alpha}{4 \pi h^2} \int_0^1 \frac{x^2 \, dx}{\sqrt{\delta(4 + \delta) x^4 - 2 \delta x^2 + 1}} . \tag{2.5}$$

For the cosine reradiation

$$F_c = \frac{N_o h^2 \alpha}{4 \pi^2} \int_0^\infty \rho \, d\rho \int_0^{2\pi} d \Phi \frac{1}{(h^2 + \rho^2)^{3/2} \left[h^2 + s^2 + \rho^2 - 2s \rho \cos \Phi\right]^{3/2}} .$$

Now

$$\int_0^{2\pi} \frac{d \Phi}{\left[A - B \cos \Phi\right]^{3/2}} = \frac{4}{\sqrt{A + B} \, (A - B)} E \left(\frac{\pi}{2}, \sqrt{\frac{2 B}{A^2 + B^2}} \right)$$

where E is the complete elliptic integral of the second kind.

$$F_c^{cos} = \frac{N_o h^2 \alpha}{\pi^2} \int_0^\infty \frac{\rho \, d\rho \; E \left(\frac{\pi}{2}, \sqrt{\frac{4 s \rho}{h^2 + (s + \rho)^2}} \right)}{(h^2 + \rho^2)^{3/2} \sqrt{h^2 + (\rho + s)^2} \left[h^2 + (\rho - s)^2\right]} . \tag{2.6}$$

Eqs. (2.5) and (2.6) can be used to evaluate the non air-attenuated neutron ground scattering as a function of the height h and the results are shown in Fig. 3.

For the approximation s/h = o, Eqs. (2.5) and (2.6) become simply

$$F_c^{iso} = \frac{N_o \alpha}{12 \pi h^2} \tag{2.7}$$

$$F_c^{cos} = \frac{N_o \alpha}{8 \pi h^2} . \tag{2.8}$$

The results of this approximation are also noted in Fig. 3. Note that the limit s/h = o results in errors of less than 10% for heights above 150 ft.

These results already indicate that it will not be necessary to consider heights lower than 150 ft. To see this, in an approximate fashion, the air attenuation is included as the factor $e^{-2 \Sigma h}$ corresponding to the minimum neutron path length in air. The ground scattering at 100 ft, if a cosine distribu-

[redacted]

DWG. 15326

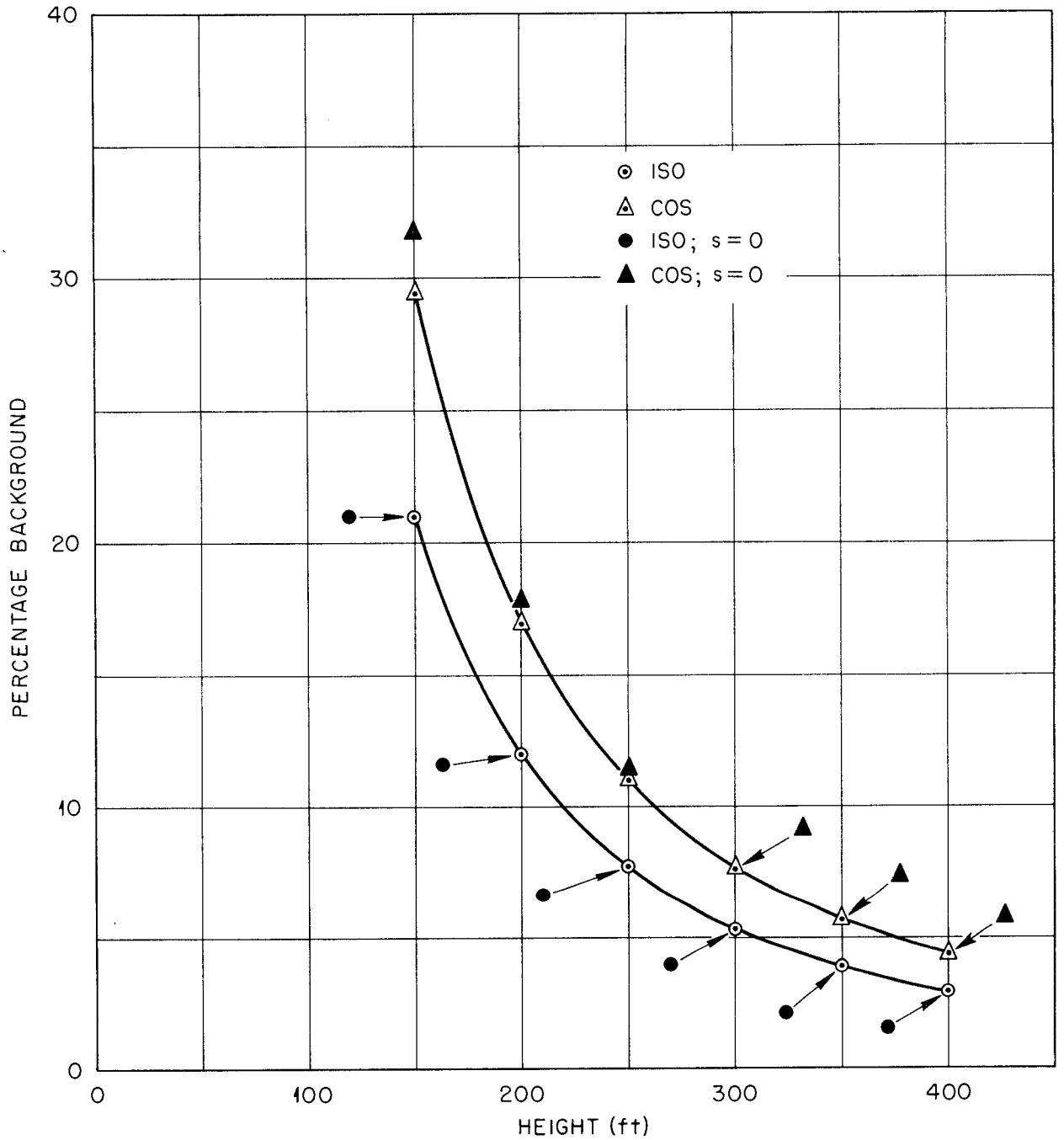

Fig. 3. Neutron Ground Scattering. No Air Attenuation ($\alpha = 0.2$; $s = 65$ ft)

tion is valid can be as high as 45%, while that at 150 ft. can still be as high as 14.6%. In addition to this there is the contribution of ground scattered neutrons which have collided once or more in air. If one aims for backgrounds of the order of 10% or so this means that the region of interest will be from h = 150 ft. or up. The approximation $\frac{s}{h} = o$ can be made to good accuracy in this region.

If this approximation is made in the original expression, Eq. (2.4), it is no longer necessary to neglect air attenuation in order to solve the equation. The expression becomes

$$\frac{dF_c}{d\sigma} = \frac{N_o\, h}{4\,\pi\, r^3}\;\frac{\alpha}{2\,\pi\, r^2}\left\{\begin{matrix} 1 \\ 2\cos\theta \end{matrix}\right\} e^{-2\,\Sigma\, r}. \tag{2.9}$$

In the isotropic case, then:

$$F_c^{iso} = \frac{N_o\, h\, \alpha}{4\,\pi}\int_h^{\infty}\frac{e^{-2\,\Sigma\, r}}{r^4}\,dr$$

$$= \frac{N_o\,\alpha}{12\,\pi\, h^2}\; e^{-2\,\Sigma\, h}\left\{1 - \Sigma\, h + 2\,(\Sigma\, h)^2 - 4\,(\Sigma\, h)^3 e^{2\,\Sigma\, h}\; E_i\,(2\,\Sigma\, h)\right\} \tag{2.10}$$

and for cosine reradiation

$$F_c^{cos} = \frac{N_o\,\alpha\, h^2}{2\,\pi}\int_h^{\infty}\frac{e^{-2\,\Sigma\, r}}{r^5}\,dr = \frac{N_o\,\alpha}{8\,\pi\, h^2}\; e^{-2\,\Sigma\, h}\left\{1 - \frac{2\,\Sigma\, h}{3} + \frac{2\,(\Sigma\, h)^2}{3}\right.$$

$$\left. - \frac{4\,(\Sigma\, h)^3}{3} + \frac{8\,(\Sigma\, h)^4}{3}\; e^{2\,\Sigma\, h}\; E_i\,(2\,\Sigma\, h)\right\} \tag{2.11}$$

where

$$E_i\,(y) = \int_y^{\infty}\frac{e^{-x}}{x}\,dx\ .$$

[redacted]

DWG. 15325

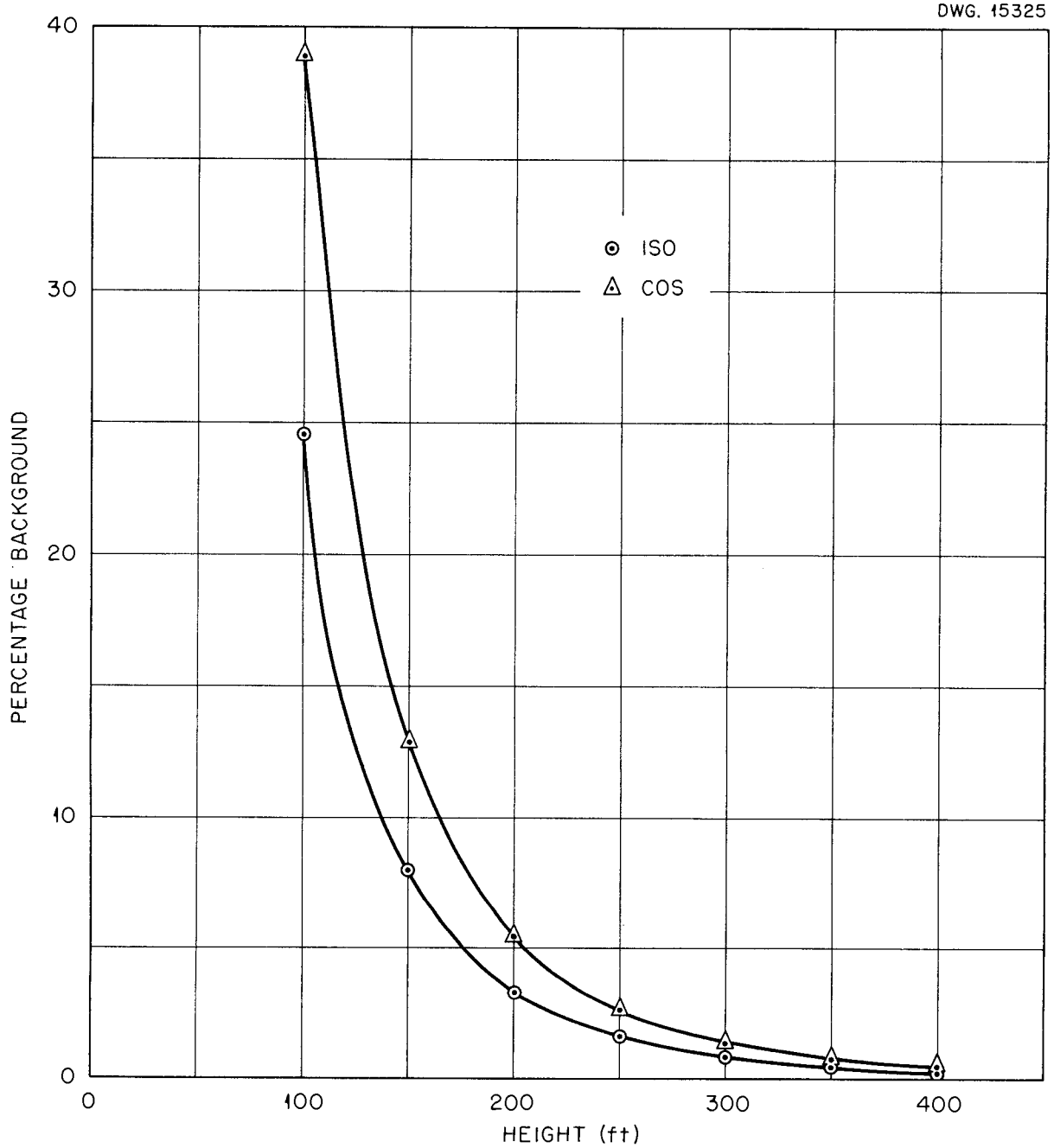

Fig. 4. Uncollided Neutron Ground Scattering. Air Attenuation Included ($a = 0.2$; $s = 0$).

The results of Eqs. (2.10) and (2.11) are plotted in Fig. 4[6]. Neutron absorption in air is neglected and thus $\Sigma = \Sigma_s = 130$ meters. Note the steep rise in ground flux as h decreases. Because the operating altitude must be at least 150 ft. it is clear that the minimum path length of a neutron is of the order of the scattering mean free path in air and one can no longer neglect the contribution of neutrons which scatter in air before or after striking the ground. This point is considered in the next section.

γ-rays of 3 Mev have a scattering mean free path in air of 237 meters. This results in a decreased air scattering compared to neutrons and an increased ground scattering since the exponential factor is larger. This is more than compensated for by the reduced albedo of γ-rays in the ground ($\alpha_o \cong 0.04$). As a result the background prediction for γ-rays is of the order of or slightly less than that for neutrons. However, no serious attention need be given the γ-ray question because the ground reflected γ-rays are highly degenerated in energy as has been confirmed by experiment[5]. As a result, they can be easily shielded out by the lead around the crew box and constitute no problem.

B) "Air Collided" Contributions to Ground Scattering

Consider some general properties of the air scattering from a point isotropic source at R to a milligoat at C (see Fig. 5).

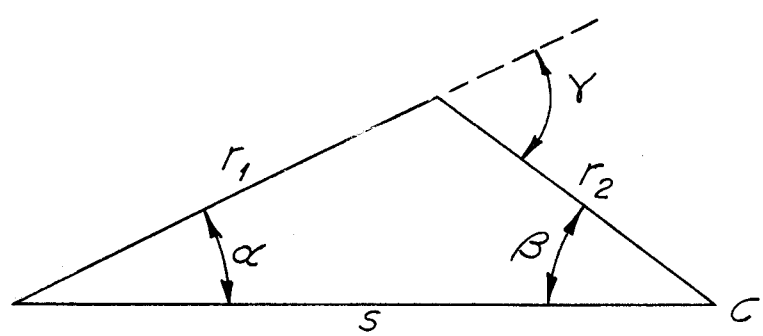

AIR SCATTERING GEOMETRY
Figure 5

The total flux due to single scattering in air, neglecting air attenuation, is:

$$F_c = \iiint_{\text{space}} r_1^2 \, dr_1 \, d(\cos\alpha) \, d\Phi \quad \frac{N_o \, \sigma_s(\gamma)}{4\pi r_1^2 \; 4\pi r_2^2}$$

where Φ is the azimuthal angle of the vector $\vec{r}_1$ measured about the reactor-crew axis. Here $\sigma_s(\gamma)$ is the differential scattering cross section in air.

$$\therefore F_c = \frac{N_o}{8\pi} \int_0^\infty \int_0^\pi \frac{\sigma_s(\gamma) \sin\alpha \, d\alpha \, dr_1}{r_2^2} .$$

If we replace r_1 by angle β as an independent variable using the relation

$$\frac{r_1}{\sin\beta} = \frac{s}{\sin(\alpha+\beta)}$$

we find

$$dr_1 = s \frac{\sin\alpha}{\sin^2(\alpha+\beta)} \, d\beta$$

and

$$F_c = \frac{N_o}{8\pi s} \int_0^\pi \int_0^{\pi-\beta} \sigma_s(\alpha+\beta) \, d\alpha \, d\beta. \tag{2.12}$$

For isotropic scattering this becomes

$$F_c = \frac{N_o \Sigma_s \pi}{16 s} \tag{2.13}$$

as has been shown previously[7]. The total scattering cross section is denoted by Σ_s.

It is clear that anisotropic scattering will not change the dependence of the air scattering on the separation s. If a cross section which varies as $1 + \cos(\alpha+\beta)$ is assumed it is easily seen that expression (2.13) is reduced by the numerical factor $1 - \frac{4}{\pi^2} \cong 0.6$.

The effects of both anisotropic scattering and air attenuation are considered in Appendix B. A solution of the transport equation for the dose (which is effectively a one-velocity problem) assuming no explicit absorption in air, is obtained for a point source in an infinite medium. This solution has the general form

$$F_A = \frac{c}{s} e^{-\Sigma_A s}$$

where Σ_A is an effective macroscopic cross section which is shown to be $\Sigma_A = .378\,\Sigma_s$ where Σ_s is the macroscopic scattering cross section in air. The constant depends on the anisotropy of scattering, and is in good agreement with the number obtained from single scattering when isotropy is assumed. As a consequence, it will be assumed henceforth that the complete effect of multiple air scattering is contained in the expression

$$F_A = N_o (1.2 \times 10^{-9}) \frac{65}{s} e^{-\Sigma_a s} \qquad (2.14)$$

where s is in feet and where the constant is chosen to agree with the standard value at a 65-ft. reactor-crew separation. Note that Σ_a is so small that the exponential can be neglected at this separation.

Three main neutron histories will be considered. One is the "air-ground" contribution consisting of those neutrons which scatter once or more in air and then reflect from the ground directly back to the crew. The "ground-air" is the reverse of this procedure. Finally "air-air" contributions are made by those neutrons which scatter once or more in air both before and after striking the ground. It is assumed that the contribution of neutrons which strike the ground two or more distinct times can be neglected.

The $s = 0$ approximation will be made throughout this section.

Consider the calculation of the "air-ground" scattered flux. The flux striking the ground is

$$\frac{dF_G}{d\sigma} = N_o (1.2 \times 10^{-9}) \frac{65}{s} e^{-\Sigma_a s}$$

This equation involves two approximations. For one thing the presence of the ground removes some of the air which was usable for scattering in the derivation of Eq. (2.13). Secondly, the neutrons strike the ground at varying angles and some average cosine factor should be included. For simplicity the first effect will be assumed small and the unknown cosine will be replaced by unity. Both of these approximations result in an overestimate of the effect.

The flux arriving at the crew box is now

$$F^{AG} = N_o\,(1.2 \times 10^{-9})(65)\,\alpha \int_h^{\infty} \frac{e^{-\overline{\Sigma}\,r}}{r^2} \begin{Bmatrix} 1 \\ 2\,h/r \end{Bmatrix} dr$$

where the choice of either an isotropic or cosine reradiation is indicated and where

$$\overline{\Sigma} = \Sigma_s + \Sigma_a = 1.378\,\Sigma_s.$$

In the isotropic case this becomes

$$F^{AG}_{iso} = N_o\,(1.2 \times 10^{-9})(65)\,\alpha\,\frac{e^{-\overline{\Sigma}\,h}}{h}\left\{1 - \overline{\Sigma}\,h\,e^{\overline{\Sigma}\,h}\,E_i\,(\overline{\Sigma}\,h)\right\} \qquad (2.15)$$

where

$$E_i\,(y) = \int_y^{\infty} \frac{e^{-t}}{t}\,dt.$$

For cosine reradiation

$$F^{AG}_{cos} = N_o\,(1.2 \times 10^{-9})\,\frac{(65)\,\alpha}{h}\,e^{-\overline{\Sigma}\,h}\left\{1 - \overline{\Sigma}\,h + (\overline{\Sigma}\,h)^2\,e^{\overline{\Sigma}\,h}\,E_i(\overline{\Sigma}\,h)\right\}. \qquad (2.16)$$

The calculation of the "ground-air" contribution follows in a similar fashion. The difference between isotropic and cosine reradiation from the ground, however, is obscured since neutrons which leave the ground at any angle are capable of scattering back into the receiver. For simplicity the expression in Eq. (2.14) is taken for the flux scattered back into the receiver in both the isotropic and cosine case. N_o is now the total flux reradiated by the ground. This contribution, denoted as F^{GA} is now:

$$F^{GA} = \frac{N_o\,(1.2 \times 10^{-9})(65)\,\alpha\,h}{2} \int_h^{\infty} \frac{e^{-\overline{\Sigma}\,r}\,dr}{r^3} = \frac{1}{4}\,F^{AG}_{cos}. \qquad (2.17)$$

Finally there is the calculation of the "air-air" contribution.

$$F^{AA} = N_o (1.2 \times 10^{-9})^2 (65)^2 \alpha 2 \pi \int_h^\infty \frac{e^{-2 \Sigma_a r}}{r} dr$$

$$= N_o (1.2 \times 10^{-9})^2 (65)^2 \alpha 2 \pi E_i (2 \Sigma_a h). \qquad (2.18)$$

Adding all these contributions to the "uncollided" results obtained in the previous section, the total ground scattering as a function of tower height is obtained. The results are plotted in Fig. 6. The results obtained by use of a diffusion approximation are also plotted in Fig. 6. This approach is discussed in the next section.

Note the steep rise in flux as the tower height is decreased. Because of the desire for a background of the order of 10% and because of the uncertainties in the calculation a minimum operating altitude of 200 ft. was agreed on.

C) Diffusion Calculation of Ground Scattering

The problem of ground scatter will now be treated using existing theories of neutron transport in matter. If certain simplifying assumptions are made the problem becomes an easy one. Specifically assume that: a) no capture occurs in the collisions of neutrons with air or ground elements; b) scatter of neutrons on all elements involved is isotropic in the center-of-mass system; c) the fast neutron dose-energy variation may be expressed as a power of the neutron energy, e.g. E^η. (A good fit to the dose-energy function is obtained by taking $\eta = 0.35$).

The Boltzmann equation describing $\psi(Z, \bar{\Omega}, u)$ (the neutron flux at Z per unit solid angle $d\bar{\Omega} = d\mu\, d\Phi$ in the direction $\bar{\Omega}$ per unit logarithimic energy internal du at u) in a medium composed of a single element may be written[8]

$$\left[\mu \frac{\partial}{\partial Z} + \sigma(u)\right] \psi(Z, \mu, u) = \int_0^u du \int d\bar{\Omega}' f(\mu_o, u - u')\, \psi(Z, \mu', u') + S(Z, u) \qquad (2.19)$$

where $\sigma(u)$ is the total cross section, $f(\mu_o, u)$ is the scattering function, μ_o

[redacted]

DWG. 15324

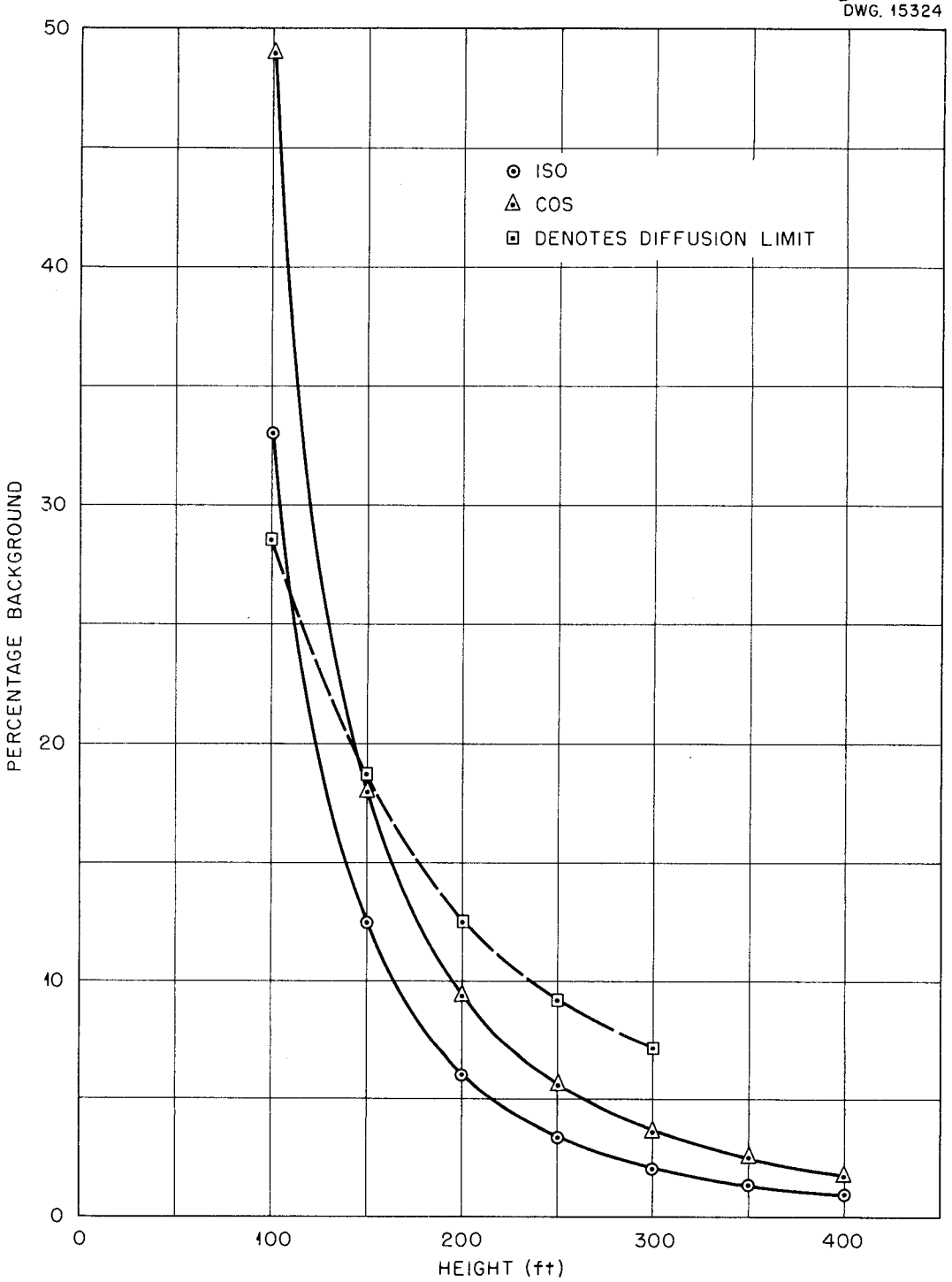

Fig. 6. Total Ground Scattering ($\alpha = 0.2$; $s = 0$).

is the angle of scattering and $S(Z, u)$ is the source term, which is assumed monoenergetic. If this equation is multiplied by $E^{\eta\alpha} e^{-\eta u}$ and integrated over all u, the one velocity equation[9]

$$\left(\mu \frac{\partial}{\partial Z} + 1\right) \Phi(Z, \mu, \eta) = \int d\Omega' \, g(\mu_0, \eta) \, \Phi(Z, \mu', \eta) + S(Z) \tag{2.20}$$

is obtained. $\Phi(Z, \mu, \eta) = \int_0^\infty e^{-\eta u} \psi \, du$ is the Laplace transform of ψ and is proportional to the dose per unit solid angle at Ω for $\eta = 0.35$. The space variable Z is here measured in units of mean free paths at the source energy. It is assumed in obtaining this equation that the mean free path of neutrons in air and soil is constant at the source energy. This should be a good approximation since only points close to the source are of concern and where little energy degradation of the scattered flux has occurred.

Expand the angular distribution of Φ and g in spherical harmonics,

$$\Phi(\eta, \mu, Z) = \sum_{\ell} \frac{2\ell + 1}{4\pi} \Phi_\ell(\eta, Z) P_\ell(\mu)$$

$$g(\eta, \mu) = \sum_{\ell} \frac{2\ell + 1}{4\pi} g_\ell(\eta) P_\ell(\mu)$$

substitute these expansions in Equation (2.20), take Legendre moments of the equation, and further, assume that only the first two terms in the above expansions are sufficient for a good description of the problem. Then

$$\frac{d}{dZ} \Phi_1 + \Phi_0 = g_0 \Phi_0 + S_0$$

$$\frac{1}{3} \frac{d\Phi_0}{dZ} = (g_1 - 1) \Phi_1$$

Eliminating Φ_1

$$\frac{d^2 \Phi_o}{d Z^2} = 3 \left[g_o (\eta) - 1\right]\left[g_1 (\eta) - 1\right] \Phi_o + 3 \left[g_1 (\eta) - 1\right] S_o .$$

Generalizing to three dimensions

$$\nabla^2 \Phi_o (\bar{r}) - \frac{\Phi_o}{L^2} (\bar{r}) + \frac{1}{D} S_o (\bar{r}) = 0 \qquad (2.21)$$

where

$$L = \left.\frac{\lambda}{\left[3 \left[g_o (\eta) - 1\right]\left[g_1 (\eta) - 1\right]\right]^{1/2}}\right\}_{\eta = 0.35}$$

$$D = \left.\frac{\lambda}{3 \left[1 - g_1 (\eta)\right]}\right\}_{\eta = 0.35}$$

$$S_o (\bar{r}) = \text{source term}$$

λ = mean free path at the source energy and the value of η has been chosen as 0.35 so that the Φ_o of Equation (2.21) is proportional to the dose.

The functions $g_e (\eta)$ are given explicitly by Bethe, Tonks and Hurwitz[10] for an element of mass M. For $M = 14$, $L = 3\lambda$ and $D = \lambda/2.5$.

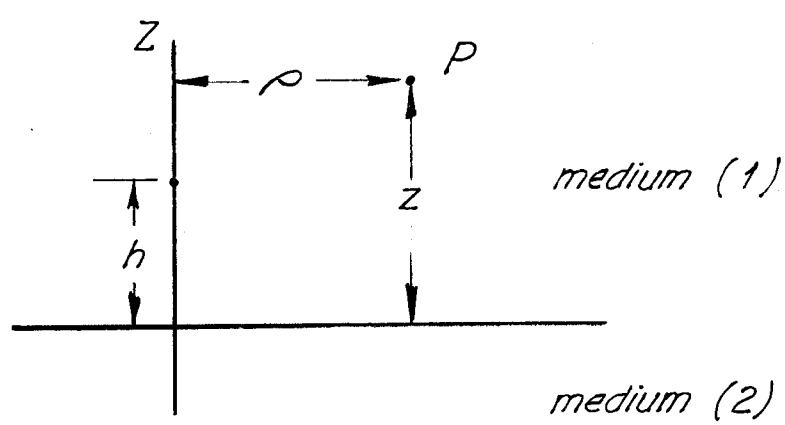

GEOMETRY FOR DIFFUSION CALCULATION
Figure 7

The diffusion equation must now be solved for the configuration shown in Fig. 7. Consider a point source of unit strength on the positive Z axis at distance h from the origin. The plane $Z = 0$ is taken as the interface between two homogeneous media having diffusion lengths and diffusion coefficients L_1, D_1 and L_2, D_2, respectively.

The diffusion equations become

$$(Z<0) \quad \frac{1}{\rho}\frac{\partial}{\partial\rho}\left(\rho\,\frac{\Phi_o^{(1)}}{\rho}\right) + \frac{\partial^2 \Phi_o^{(1)}}{\partial Z^2} = \frac{1}{L_1^2}\,\Phi_o^{(1)} \quad \frac{\delta(\rho)\delta(Z-h)}{2\pi\rho D_1} \tag{2.22}$$

$$(Z>0) \quad \frac{1}{\rho}\frac{\partial}{\partial\rho}\left(\rho\,\frac{\partial\Phi_o^{(2)}}{\partial\rho}\right) + \frac{\partial^2 \Phi_o^{(2)}}{\partial Z^2} = \frac{1}{L_2^2}\,\Phi_o^{(2)} \tag{2.23}$$

with the boundary conditions at $Z = 0$

$$\Phi_o^{(1)}(\rho, 0) = \Phi_o^{(2)}(\rho, 0)$$

$$D_1\frac{\partial\Phi_o^{(1)}}{\partial Z} = D_2\frac{\partial\Phi_o^{(2)}}{\partial Z}$$

and where ρ is the polar radius measured from the Z axis. This problem is mathematically similar to the problem of the oscillating dipole above a finitely conducting plane which was first treated by Sommerfeld[11-12].

The problem may be solved by using the Hankel Transform[13]. Multiplying (2.22) and (2.23) by $\rho\, J_o(\xi\rho)$ and integrating over all ρ one finds

$$(Z>0) \quad \frac{d^2\bar{\Phi}_1}{dZ^2} = \left(\xi^2 + \frac{1}{L_1^2}\right)\bar{\Phi}_1 - \frac{\delta(Z-h)}{2\pi D_2}$$

$$(Z<0) \quad \frac{d^2\bar{\Phi}_2}{dZ^2} = \left(\xi^2 + \frac{1}{L_2^2}\right)\bar{\Phi}_2$$

and at $Z = 0$

$$\bar{\Phi}_1 = \bar{\Phi}_2$$

$$D_1 \frac{d\,\bar{\Phi}_1}{d\,Z} = D_2 \frac{d\,\bar{\Phi}_2}{d\,Z}$$

where

$$\bar{\Phi}_{1,2} = \int_0^\infty \rho\, d\rho\, J_o\,(\xi\,\rho)\, \Phi_o^{(1),(2)} .$$

The solutions are easily shown to be

$$\bar{\Phi}_1 = \frac{1}{4\,\pi} \frac{\left\{D_1\,\varkappa_1 - D_2\,\varkappa_2\right\}}{D_1\,\varkappa_1\left\{D_2\,\varkappa_2 + D_1\,\varkappa_1\right\}}\; e^{-(Z + Z_o)\,\varkappa_1} + \frac{e^{-|Z - h|\,\varkappa_1}}{4\,\pi\,D_1\,\varkappa_1} \tag{2.24}$$

$$\bar{\Phi}_2 = \frac{1}{2\,\pi} \frac{e^{-h\,\varkappa_1 + Z\,\varkappa_2}}{\left\{D_1\,\varkappa_1 + D_2\,\varkappa_2\right\}} \tag{2.25}$$

where

$$\varkappa_{1,2} = \sqrt{\xi^2 + 1/L_{1,2}^2} .$$

Applying the inversion formula

$$\Phi_o^{(1),(2)} = \int_0^\infty \xi\, d\,\xi\, J_o\,(\xi\,\rho)\, \bar{\Phi}_{1,2}$$

to (2.24) and (2.25)

$$(Z>0)\quad \Phi_o^{(1)} = \frac{1}{4\,\pi}\left\{\frac{e^{-\frac{1}{L_1}\sqrt{\rho^2 + (Z - h)^2}}}{D_1\sqrt{\rho^2 + (Z - h)^2}} \quad \frac{e^{-\frac{1}{L_1}\sqrt{\rho^2 + (Z + h)^2}}}{D_1\sqrt{\rho^2 + (Z + h)^2}} + \right.$$

$$\left. + 2\int_0^\infty \xi\, d\,\xi\, J_o\,(\xi\,\rho)\; \frac{e^{-(Z + h)\sqrt{\xi^2 + 1/L_1^2}}}{\left\{D_1\sqrt{\xi^2 + 1/L_1^2} + D_2\sqrt{\xi^2 / 1/L_2^2}\right\}}\right\}$$

$$(Z<0) \quad \Phi_o^{(2)} = \frac{1}{2\pi}\int_0^\infty \xi \, d\xi \, J_o(\xi\rho) \, \frac{e^{-h\sqrt{\xi^2 + 1/L_1^2}} + Z\sqrt{\xi^2 + 1/L_2^2}}{\left\{D_1\sqrt{\xi^2 + 1/L_1^2} + D_2\sqrt{\xi^2 + 1/L_2^2}\right\}}.$$

The first term in $\Phi_o^{(1)}$ $(Z>0)$ gives the contribution from the source alone while the remaining two terms represent the effect of medium (2) on Φ_o in medium (1). Since the disparity in the densities of the two media is great ($\therefore L_1, D_1 \gg L_2, D_2$) the effect of the ground is overestimated only slightly by neglecting the term containing D_2 in the denominator of the third term in $\Phi_o^{(1)}$. Then

$$\Phi_o^{(1)} = \frac{1}{4\pi D_1}\left\{\frac{e^{-\frac{1}{L_1}\sqrt{\rho^2 + (Z-h)^2}}}{\sqrt{\rho^2 + (Z-h)^2}} + \frac{e^{-\frac{1}{L_1}\sqrt{\rho^2 + (Z+h)^2}}}{\sqrt{\rho^2 + (Z+h)^2}}\right\}.$$

The second term represents a mirror image of the source in the plane $Z = 0$.

Then the background is, in this approximation (for $Z = h$, $\rho = s = 65'$, $L = 3.05\lambda$)

$$\%B\,G = \frac{100\,s}{\sqrt{(2h)^2 + s^2}} \, e^{-\frac{1}{L_1}\left[\sqrt{s^2 + (2h)^2} - s\right]}.$$

This is plotted in Fig. (6) using $\lambda = 130$ meters.

A more detailed calculation considering first collisions in the air and ground as diffusion sources and taking into account also the direct first scatterings in the two media results in a percentage background which differs from that found above by only 2% at most in the range of h considered.

D) Effect of Thinning Down the Shield

The previous calculations of ground scattering have all been based on the assumption of an isotropic reactor. In practice the rear and side portions of the reactor shield will be shaved down; as a result the radiation will be far from isotropic. The resultant angular distribution is an unknown quantity since optimization will be done right at the tower site.

It is of interest to inquire what the maximum increase in background can be due to an arbitrary thinning down of the shield. It is assumed that the thinning will be done in a symmetrical fashion as regards rotation about the reactor crew axis. The effective source strength is then a function of θ only where θ is the angle between the reactor-crew axis and the direction of emission. It is also assumed that the neutrons emerge in the normal direction to the shield.

In this section the uncollided (direct) ground reflection of neutrons is compared with the air scattering. Air attenuation is neglected in both cases.

The appropriate geometry for this calculation is shown in Fig. 8. The

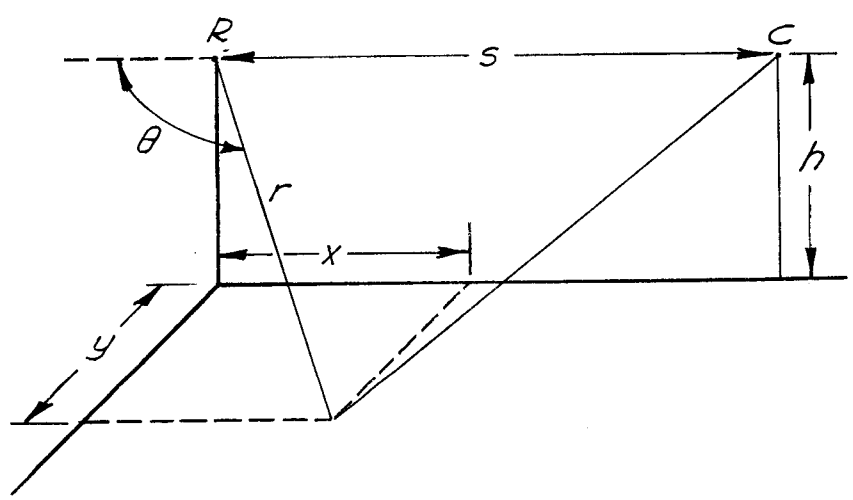

SHIELD THINNING GEOMETRY
Figure 8

independent variables for the integration over the ground are now θ and x. In terms of these coordinates the direct flux striking the ground is

$$dF_G = \frac{N_o\ h}{4\ \pi}\ \frac{\sin\theta\ \ d\theta\ \ dx\ \ f(\theta)}{x\sqrt{x^2\ \tan^2\theta\ -\ h^2}}$$

where

$$y^2 = x^2 \tan^2 \theta - h^2$$

and

$$r = -x \sec \theta \quad .$$

The function $f(\theta)$ represents the asymmetry of the reactor. It is normalized so that

$$2\pi \int_{-1}^{1} f(\theta)\, d(\cos\theta) = 1 \quad .$$

The resultant flux reflected back to the crew box is then:

$$dF_c = \frac{N_o\, h\, \alpha}{8\pi^2} \frac{f(\theta) \sin\theta \; d\theta \; dx}{x\sqrt{x^2 \tan^2\theta - h^2}\left[(s-x)^2 + x^2 \tan^2\theta\right]} .$$

Integrating over the ground, this becomes

$$F_c = \frac{N_o\, h\, \alpha}{8\pi^2} \int_0^{\pi} f(\theta) \sin\theta \; d\theta \int_{\frac{-h}{\tan\theta}}^{\mp\infty} \frac{2\, dx}{x\sqrt{x^2 \tan^2\theta - h^2}\left[(s-x)^2 + x^2 \tan^2\theta\right]} \tag{2.26}$$

where the limit of $\left[\mp\infty\right]$ is used if θ is in the $\left\{\begin{matrix}\text{first}\\ \text{second}\end{matrix}\right\}$ quadrant. The factor of 2 results from the fact that the integration over x repeats itself once. Equation (2.26) simplifies still further if the substitution $x \tan\theta = -h \sec\Phi$ is made. The integral over x becomes

$$F_c = \frac{2}{h} \int_0^{\pi/2} \frac{d\Phi}{\left[(s^2 + 2\, sh \frac{\sec\Phi}{\tan\theta} + \frac{h^2 \sec^2\Phi}{\tan^2\theta} + h^2 \sec^2\Phi\right]}$$

$$= \frac{2 \sin^2\theta}{h^3} \int_0^{\pi/2} \frac{\cos^2\Phi \; d\Phi}{1 + 2\lambda \cos\Phi \sin\theta \cos\theta + \lambda^2 \cos^2\Phi \sin^2\theta}$$

where

$$\lambda \equiv \frac{s}{h} .$$

$$\therefore F_c = \frac{N_o \alpha}{4 \pi^2 h^2} \int_0^{\pi} f(\theta) \quad Q(\theta) \quad \sin \theta \quad d\theta \tag{2.27}$$

where

$$Q(\theta) = \sin^2 \theta \int_0^{\pi/2} \frac{\cos^2 \Phi \quad d\Phi}{1 + 2\lambda \cos \Phi \quad \sin \theta \quad \cos \theta + \lambda^2 \cos^2 \Phi \quad \sin^2 \theta}$$

A similar formula may be written down for the air scattering using the results of Section II B. Equation (2.12), assuming isotropic scattering in air, now becomes

$$F = \frac{N_o \Sigma_s}{8 \pi s} \int_0^{\pi} \int_0^{\pi - \alpha} f (\pi - \alpha) \, d \beta \, d \alpha$$

where $\Sigma = \frac{1}{\lambda_s}$ = total scattering cross section in air. Recalling that $\theta = \pi - \alpha$ this is

$$F = \frac{N_o}{8 \pi s \lambda_s} \int_0^{\pi} f(\theta) \quad \theta \quad d\theta. \tag{2.28}$$

The ratio of ground to air scattering is now given as

$$R\left(\frac{G}{A}\right) = \left(\frac{2 \alpha}{\pi}\right)\left(\frac{\lambda_s \varepsilon}{h^2}\right) \frac{\int_0^{\pi} f(\theta) \, Q(\theta) \, \sin \theta \quad d\theta}{\int_0^{\pi} f(\theta) \, \theta \, d\theta} .$$

The upper limit of this ratio, for arbitrary $f(\theta)$ is easily found as follows.

The integral in the numerator can be written as

$$I_N \equiv \int_0^{\pi} f(\theta) \left[\frac{Q(\theta) \sin \theta}{\theta}\right] \theta \, d\theta .$$

The quantity in the brackets is a well behaved positive function of θ and finite at all points.

$$\therefore I_N \leq \left[\frac{Q(\theta) \sin \theta}{\theta}\right]_{MAX} \int_0^{\pi} f(\theta) \, \theta \, d\theta$$

and

$$R\left(\frac{G}{A}\right) \leq \left(\frac{2\alpha}{\pi}\right)\left(\frac{\lambda_s s}{h^2}\right) \left[\frac{Q(\theta) \sin \theta}{\theta}\right]_{MAX} \tag{2.29}$$

where the subscript on the brackets indicates that the maximum value of the function over the range of integration is to be used.

Actually the resultant value of R cannot be used immediately to estimate the increase in background due to shaving down the reactor. For one thing, the air scattering chosen in Eq. (2.28) has not been normalized to the standard value given in Eq. (2.29). In addition, the effects of air attenuation, preferential forward scattering and multiple scattering in air have not been included. Instead the background given by Eq. (2.29) should be compared to the background resulting from an isotropic source distribution making the same assumptions with regard to air attenuation, etc. This background is

$$R_{iso}\left(\frac{G}{A}\right) = \frac{2\alpha}{\pi}\left(\frac{\lambda_s s}{h^2}\right)\left(\frac{2}{\pi^2}\right)\int_0^{\pi} Q(\theta) \sin \theta \, d\theta .$$

The maximum relative increase of background is then given by the ratio of these two quantities

$$\frac{R\left(\frac{G}{A}\right)}{R_{iso}\left(\frac{G}{A}\right)} = \frac{\pi^2}{2} \frac{\left[\frac{Q(\theta) \sin \theta}{\theta}\right]_{MAX}}{\int_0^{\pi} Q(\theta) \sin \theta \, d\theta}$$

The maximum value of the quantity in the brackets is easily found by numerical means for an operating altitude of 200 ft. and a reactor crew separation of 65 ft. The maximum occurs at $\theta \cong 88^{\circ}$ and is numerically equal to 0.462. The integral in the denominator has also been evaluated numerically and found to be equal to 1.017. The maximum relative increase in background is then

$$= \frac{\pi^2}{2} \frac{0.462}{1.017} = 2.24.$$

Thus the effect of an arbitrary shield thinning is to increase the background over the value calculated in the isotropic case by a factor which is not greater than 2.24.

In practice the shield will not be thinned down just at one angle but will be thinned fairly gradually. The resultant increase in background should be much less than the maximum value.

E) <u>The Single Tower</u>

An earlier design that was considered for the TSF is illustrated in Fig. 9. Here the reactor is mounted above the crew box in a vertical line above the

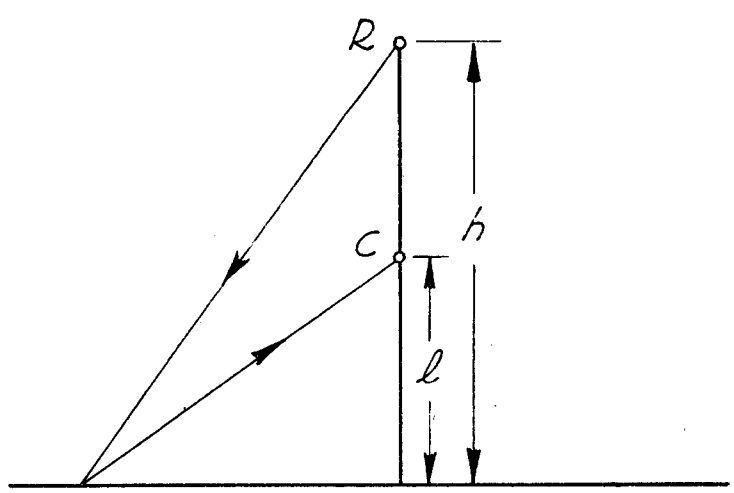

SINGLE TOWER GEOMETRY
Figure 9

ground. Using the albedo approach the ground scattering can be written as

$$F_c = \frac{N_o \alpha h}{4 \pi} \int_0^\infty \frac{\rho \, d\rho}{(h^2 + \rho^2)^{3/2} (\ell^2 + \rho^2)} \left\{ 2 \frac{\ell}{\sqrt{\ell^2 + \rho^2}} \right\}^{1}$$

where the choice of either an isotropic or cosine reradiation is indicated. This integral can be done analytically with the following results.

$$F_c^{iso} = \frac{N_o \alpha}{4 \pi (\ell^2 - h^2)} \left\{ 1 - \frac{h}{\sqrt{\ell^2 - h^2}} \left[\frac{\pi}{2} - \tan^{-1} \frac{h}{\sqrt{\ell^2 - h^2}} \right] \right\} (h < \ell)$$

$$= \frac{N_o \alpha}{4 \pi (h^2 - \ell^2)} \left\{ \frac{h}{2 \sqrt{h^2 - \ell^2}} \log \frac{h + \sqrt{h^2 - \ell^2}}{h - \sqrt{h^2 - \ell^2}} - 1 \right\} (h > \ell) \tag{2.30}$$

$$F_c^{cos} = \frac{N_o \alpha}{2 \pi (\ell + h)^2} . \tag{2.31}$$

Although the resultant backgrounds are of the same order of magnitude as those calculated in Section II A this design was abandoned. The principle reason was that engineering requirements resulted in large structural members being near the reactor and crew box. The reflected neutron fluxes from these members completely obscured the air scattering.

F) The Igloo

An alternative proposal for a testing facility involved the use of a spherical reactor-shield combination half buried in the ground. A similar structure for the crew box would be located 65 feet away. (See Fig. 10, Page 28.)

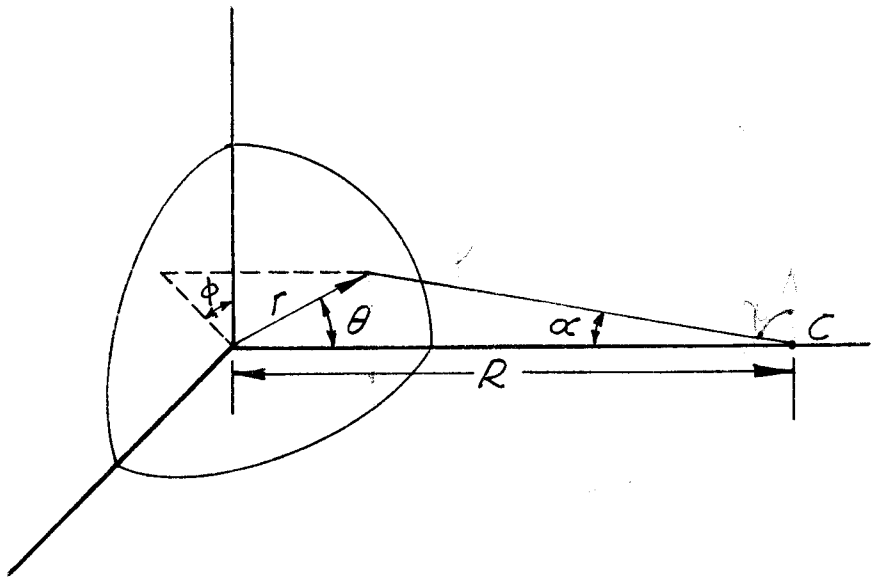

IGLOO GEOMETRY
Figure 10

In order to calculate the ground scattering some assumption must be made as to the angular distribution of neutrons leaving the shield surface. Of course, if the neutrons all emerged with a radial distribution there would be no direct ground scattering. Such an assumption would be grossly optimistic. Instead, for convenience, the angular distribution is assumed to be proportional to the cosine of the angle between the direction of emission and the normal to the surface.

The calculation will be done in two steps. First, the actual flux falling upon the ground at a distance R (see Fig. 10) from the center of the reactor is calculated. This result is then used to obtain the flux reradiated to the crew box.

The relevant equation for the first part may be found by the methods of vector analysis. Let $\vec{r}$ be a vector extending from the center of the reactor to an arbitrary point on the surface. The vector $\vec{r}$ is specified by the angle θ which it makes with the direction vector $\vec{R}$ to the ground point and by a phase angle Φ as shown. Those neutrons which leave the reactor surface at $\vec{r}$

and strike the ground at $\vec{R}$ travel along the vector $\vec{R} - \vec{r}$ and leave the surface at an angle ψ to the normal given by :

$$\cos \psi = \frac{(\vec{R} - \vec{r}) \cdot \vec{r}}{|R - r| \; |r|}$$

where the absolute values indicate the magnitude of the vectors. They also strike the ground at R at an angle χ given by:

$$\cos \chi = \frac{|r| \sin \theta \; \cos \Phi}{|R - r|}.$$

Finally, if the total (over 4π radians) strength of the reactor is N_o (neut/sec) the flux emerging in the direction $\vec{R} - \vec{r}$ per unit solid angle per unit area of reactor surface is:

$$F = \frac{N_o}{4\pi |r|^2} \frac{\cos \psi}{\pi}$$

since

$$\int d\Omega_\psi \int d(\text{surface}) \; F = N_o.$$

The total flux at $\vec{R}$ can now be written as:

$$F(R) = \int \frac{N_o}{4\pi |r|^2} \frac{\cos \psi}{\pi} \frac{\cos \chi}{|R - r|^2} \; d(\text{surface})$$

$$= \frac{N_o}{4\pi^2} \int \frac{[(\vec{R} - \vec{r}) \cdot \vec{r}]}{|R - r|^4 \; |r|^2} \sin \theta \; \cos \Phi \; d(\text{surface})$$

where the integral over the surface is extended only over those regions visible from $\vec{R}$. Now $\vec{R} \cdot \vec{r} = Rr \cos \theta$. Furthermore, the limit of integration over the surface is obtained by finding that angle θ at which the vector $(\vec{R} - \vec{r})$ is normal to the surface. This angle θ_{MAX} is given by the relation

$$(\vec{R} - \vec{r}) \cdot \vec{r} = 0$$

or

$$R \cos \theta_{MAX} = r$$

$$\therefore \cos \theta_{MAX} = \frac{r}{R}.$$

Since $d(\text{surface}) = |r|^2 \sin \theta \; d\theta \; d\Phi$, the total flux at R can be written:

$$F(R) = \frac{N_o \, r}{4 \pi^2} \int_0^{\theta_{MAX}} \frac{(R \cos \theta - r) \sin^2 \theta \; d\theta}{(R^2 + r^2 - 2Rr \cos \theta)^2} \int_{-\pi/2}^{\pi/2} \cos \Phi \, d\Phi$$

$$= \frac{N_o \, r}{2 \pi^2} \int_0^{\cos^{-1} \frac{r}{R}} \frac{(R \cos \theta - r) \sin^2 \theta \; d\theta}{(R^2 + r^2 - 2Rr \cos \theta)^2}$$

$$= \frac{N_o \, r}{2 \pi^2 R^3} \int_0^{\cos^{-1} x} \frac{(\cos \theta - x) \sin^2 \theta \; d\theta}{(1 + x^2 - 2 x \cos \theta)^2} \qquad (2.32)$$

where $x = r/R$. The extension of this formula to the case where the emergent angular distribution is not simply $\cos \theta$ is easily made.

The integral, in general, can be evaluated by numerical methods. In the particular case of a $\cos \theta$ distribution, however, an analytic solution can be obtained by using an alternative approach. Instead of using $\vec{r}$ as the variable vector which is to be integrated over, use $\vec{R} - \vec{r} \equiv \vec{\ell}$ say. The flux at the crew is

$$F_c = \frac{N_o}{4 \pi^2 r^2} \int d(\text{surface}) \cos \psi \; \frac{\cos \chi}{\ell^2}$$

but $\cos \psi \; d(\text{surface}) \; \ell^2 \sin \alpha \; d\Phi \, d\alpha$ where α is the angle between $\vec{\ell}$ and $\vec{R}$.

Furthermore

$$\cos \chi = \frac{r \sin \theta \; \cos \Phi}{\ell}$$

and

$$\frac{\sin \theta}{\ell} = \frac{\sin \alpha}{r}$$

$$\therefore F_c = \frac{N_o}{4 \pi^2 r^2} \int_{-\pi/2}^{\pi/2} d\Phi \int_{o}^{\sin^{-1} \frac{r}{R}} \sin^2 \alpha \cos \Phi \, d\alpha$$

$$= \frac{N_o}{4 \pi^2 r^2} \left\{ \sin^{-1} \frac{r}{R} - \frac{1}{2} \sin \left(2 \sin^{-1} \frac{r}{R}\right) \right\}$$

$$= \frac{N_o}{4 \pi^2 r^2} \left[\sin^{-1} x - x \sqrt{1 - x^2} \right]$$

where $x = r/R$

$$\therefore F_c = \frac{N_o r}{2 \pi^2 R^3} \left\{ \frac{1}{2 x^3} \sin^{-1} x - \frac{\sqrt{1 - x^2}}{2 x^2} \right\} .$$

The quantity in the brackets is plotted in Fig. 11 as a function of x. The function very rapidly approaches the asymptotic value of 1/3. At $x = 0.5$ which is a separation of only one reactor radius from the shield surface the integral is already equal to 0.36. Thus the flux striking the ground can be written as

$$F(R) = \frac{N_o r}{6 \pi^2 R^3} f(R) \tag{2.33}$$

where f is a form factor which is equal to unity except very close to the shield surface.

To find the flux reradiated to the crew box an albedo approach will be used assuming isotropic reradiation from the ground. In practice, the front face of the crew box will be rendered almost black to neutrons in order to cut out the direct beam. This also has the additional effect of screening the ground behind

[redacted]

DWG. 15323

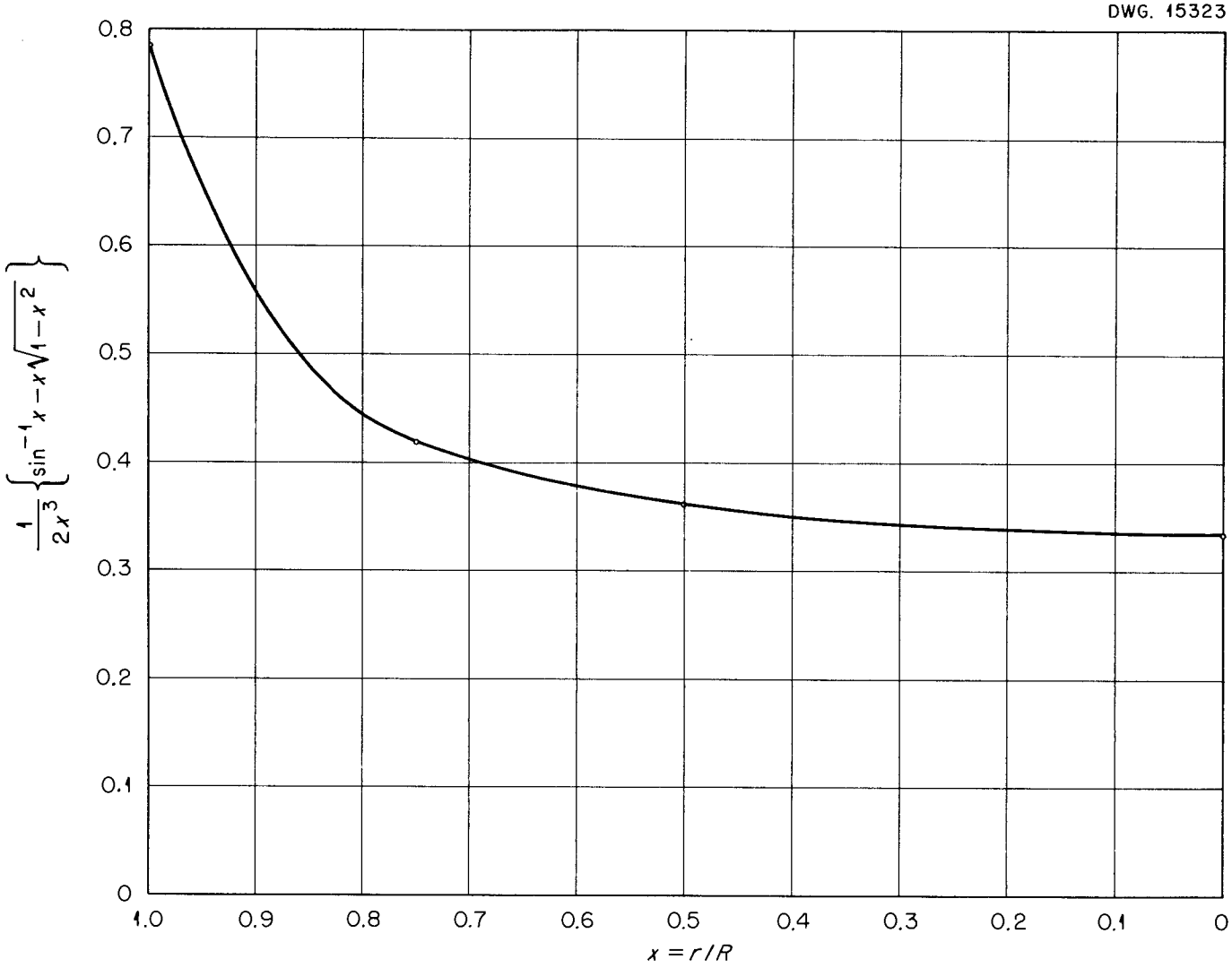

Fig. 11. "Igloo" Form Factor (x $^1/_3$).

the crew box from the reactor beam. To take account of this in an approximate manner, the crew igloo is replaced by a square box as shown in Fig. 12. The

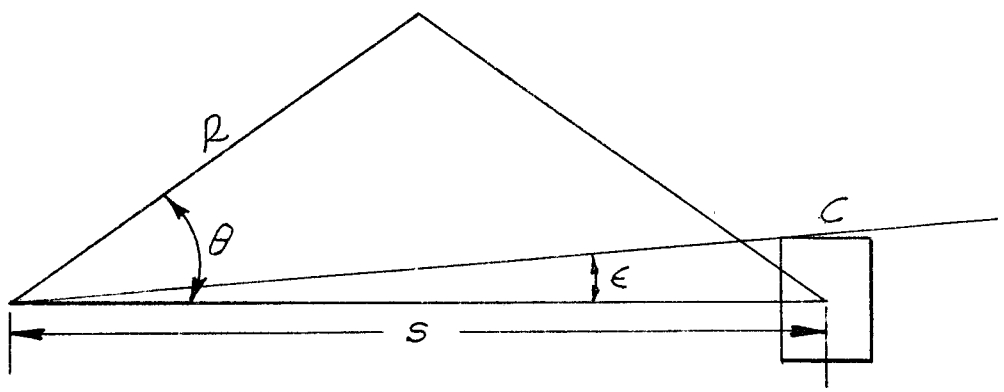

IGLOO GEOMETRY, TOP VIEW
Figure 12

effect of the front wall is taken into account by not integrating over angles of θ which are less than ϵ, where ϵ is the half angle subtended by the crew box at the reactor. The detector is assumed to be in the center of the crew box.

The ground scattered flux is now

$$F_G = \int_{\epsilon}^{\pi}\int_{0}^{\infty} \frac{N_o\, r\, \alpha}{6\,\pi^2\, R^3}\; f\,(R)\; \frac{2\,R\;\; dR\;\; d\theta}{2\,\pi\,(R^2 + s^2 - 2\,R\,s\,\cos\theta)}$$

$$= \frac{N_o\,\alpha\, r}{6\,\pi^3}\int_{0}^{\infty} \frac{f\,(R)\;dR}{R^2}\;\int_{\epsilon}^{\pi} \frac{d\theta}{(R^2 + s^2 - 2\,R\,s\,\cos\theta)}$$

$$= \frac{N_o\,\alpha\, r}{6\,\pi^3}\int_{0}^{\infty} \frac{f(R)\;dR}{R^2}\;\frac{2}{\sqrt{(R^2 - s^2)^2}}\left\{\frac{\tan^{-1}\,(R + s)^2\,\tan\theta/2}{|R^2 - s^2|}\right\}_{\epsilon}^{\pi}$$

$$= \frac{N_o \alpha r}{3 \pi^3} \int_0^\infty \frac{f(R)\, dR}{R^2 \left|R^2 - s^2\right|} \left\{ \frac{\pi}{2} - \tan^{-1} \left[\frac{R + s}{|R - s|} \tan \frac{\epsilon}{2} \right] \right\} . \qquad (2.34)$$

This integral has been evaluated by numerical means using the following values of of the parameters:

$$s = 65 \text{ ft.}$$

$$\alpha = 0.2$$

$$\epsilon = \frac{6.5}{65} = 0.1$$

$$r = 6.5 \text{ ft}$$

The resultant background was found to be approximately 50% .

It should be noted that this is only a lower limit to the flux. A large contribution will be obtained from flux which scatters in air before or after striking the ground. As an example of this, consider the contribution of those neutrons which scatter in air before striking the ground and then reflect back directly to the crew box. Air attenuation will be neglected and the unknown cosine factor for the neutrons striking the ground will be set equal to unity. In order to omit those neutrons which strike the crew box directly on air scattering, the integral over θ will once again be restricted to angles not less than ϵ (see Fig. 12). This omits some regions of the ground which are actually useable for this process. On this score, at least, the result will be an underestimate. Using the same notation as in Fig. 12 the flux at the crew box is seen to be:

$$F_c = \int_\epsilon^\pi \int_0^\infty N_o (1.2 \times 10^{-9}) \frac{65}{R} \cdot \alpha \cdot \frac{2 R\, dR\, d\theta}{2 \pi (R^2 + s^2 - 2 R s \cos \theta)}$$

$$= \frac{N_o (1.2 \times 10^{-9}) (65) \alpha}{\pi} \int_\epsilon^\pi \int_0^\infty \frac{dR\, d\theta}{R^2 + s^2 - 2 R s \cos \theta}$$

let $t = R/s$ and recall that $s = 65$ ft, then:

$$F_c = N_o (1.2 \times 10^{-9}) \frac{\alpha}{\pi} \int_{\epsilon}^{\pi} \int_{0}^{\infty} \frac{dt\, d\theta}{1 + t^2 - 2\, t \cos \theta}.$$

Now

$$\int_{0}^{\infty} \frac{dt}{1 + t^2 - 2\, t \cos \theta} = \frac{\pi - \theta}{\sin (\pi - \theta)}$$

$$\therefore F_c = N_o (1.2 \times 10^{-9}) \frac{\alpha}{\pi} \int_{\epsilon}^{\pi} \frac{(\pi - \theta)\, d\theta}{\sin (\pi - \theta)}.$$

Let $\psi = \pi - \theta$. The ratio of air-ground to air scattering is now

$$R = \frac{\alpha}{\pi} \int_{0}^{\pi - \epsilon} \frac{\psi\, d\psi}{\sin \psi}. \tag{2.35}$$

The integral may be approximated as follows:

$$\int_{0}^{\pi - \epsilon} \frac{\psi\, d\psi}{\sin \psi} = \int_{0}^{\pi - \epsilon} \frac{\pi\, d\psi}{\pi - \psi} + \int_{0}^{\pi - \epsilon} \left(\frac{\psi}{\sin \psi} - \frac{\pi}{\pi - \psi} \right) d\psi.$$

The quantity in the brackets is now a well behaved function and so the upper limit on this integral can be set equal to π. Hence

$$= \pi \log\left(\frac{\pi}{\epsilon}\right) + \int_{0}^{\pi} \left(\frac{\psi}{\sin \psi} - \frac{\pi}{\pi - \psi} \right) d\psi.$$

The integral on the right is some number which is easily evaluated by numerical means. The remaining term is usually dominant, however, for small ϵ. In the previous case, a value of $\epsilon = 6.5/65 = 0.1$ was used to find the direct ground scattering. Using this again, there results

$$R \cong \alpha \log (10\, \pi) = 0.2 \log (31.4) = .69.$$

Hence the percentage background due to this effect is $\%B = 69\%$.

This is even larger than the direct ground scattering. In addition to this, of course, there are the ground-air and air-air contributions which may be expected to be considerable. Because of these results, and because of the impossibility of obtaining a direct measurement of the background, the igloo proposal was abandoned.

G) Possible Use of the I. E. T. for Air Scattering Measurements

The General Electric Company is planning an Initial Engine Test for the aircraft reactor in the near future. The facility will include a reactor mounted on top of a flatcar at a height of about 13 feet. As an adjoint to this, it has been proposed that a crew box be erected at a similar height at a separation distance of 65 feet and that rough air scattering measurements be made. To reduce the very large direct ground scattering, a wall would be built between the reactor and crew box. This wall would be about 10 feet high, in order to allow the direct beam to hit the crew box, and would extend quite far in the perpendicular direction to the reactor-crew axis.

Although use of such a wall could be expected to cut the ground scattering down considerably, there will always be the combined effect of the air-ground and ground-air scattering. Thus, points on the ground which cannot see the reactor, due to the presence of the wall, can be irradiated by air scattering. The resultant background should be of the same order of magnitude as the ground-air contribution to the igloo and hence too high for careful shield optimization. In addition there is always the air-air contribution.

One question of interest that arose was the possibility of a large effect arising from the shaving down of the reactor. To investigate this, Eq. (2.27) of Section II D can be rewritten to take account of the ground-air case. The result is easily found to be:

$$F_c = \frac{N_o\ (1.2 \times 10^{-9})\ \alpha}{4\ \pi^2} \int_0^{\pi} f(\theta)\ \ T(\theta)\ \ \sin\theta\ \ d\theta \qquad (2.36)$$

where

$$T\ (\theta) = \sin\theta \int_0^{\pi/2} \frac{\cos\Phi\ \ d\Phi}{\sqrt{\sin^2\theta\ \ \cos^2\Phi + 2\ \beta\ \cos\Phi\ \ \sin\theta\ \ \cos\theta + \beta^2}}$$

and $\beta = h/s$. As before, the maximum relative increase in background is then found to be:

$$\frac{R\binom{A}{G}}{R_{iso}\binom{A}{G}} = \frac{\pi^2}{2}\ \frac{\left[T\ (\theta)\ \frac{\sin\theta}{\theta}\right]_{MAX}}{\int_0^{\pi} T\ (\theta)\ \sin\theta\ \ d\theta}\ .$$

The maximum value of the quantity in the brackets has been found for $\beta = \frac{13}{65} = 0.2$. It has the value 0.976 at 75°. The total integral was found to be 3.173. The maximum increase in background is then

$$= \frac{\pi^2}{2}\ \frac{0.976}{3.173} = 1.5\ .$$

Thus, no large additional increase in background will result from shaving down the reactor shield.

III. STRUCTURAL SCATTERING

A) Tower Scattering

The configuration of the tower (cf. Fig. 1) makes it clear that an albedo calculation is not valid. The thicknesses of the members are of the order of 1/4 to 3/4 inches and hence are considerably smaller than the mean free path ($\sim$6 cm) of neutrons in steel. As a result, self-shielding will be fairly unimportant. It seems then that a reasonable upper bound to the structural scattering can be found by assuming single scattering by all tower members with no self-shielding.

The scattering cross section will be assumed to be isotropic. This error is mostly compensated for by using the removal cross section, as measured in the lid tank, instead of the actual scattering cross section. The removal cross section effectively is a measure of the scattering with the strong forward peak subtracted out. Using the measured value of 6 cm. the macroscopic cross section for steel can be written in the unconventional units of cm^2/lb as:

$$\sigma_{cm^2/lb} = \frac{\Sigma}{\rho} = \frac{1}{6} \cdot \frac{453.6}{7.86} = 9.62 \ cm^2/lb \ .$$

In the following calculations, it will be assumed that the tower has a weight of 700 pounds per running foot. This is a preliminary estimate and also a probable upper limit to the actual weight. In addition the cross sectional area of the towers, bridge and cross member will be ignored and the entire material is taken to be located at the center lines of these members.

The contribution to scattering of the towers and bridge can be calculated from the general geometry shown in Fig. 13. Here a beam is located half way

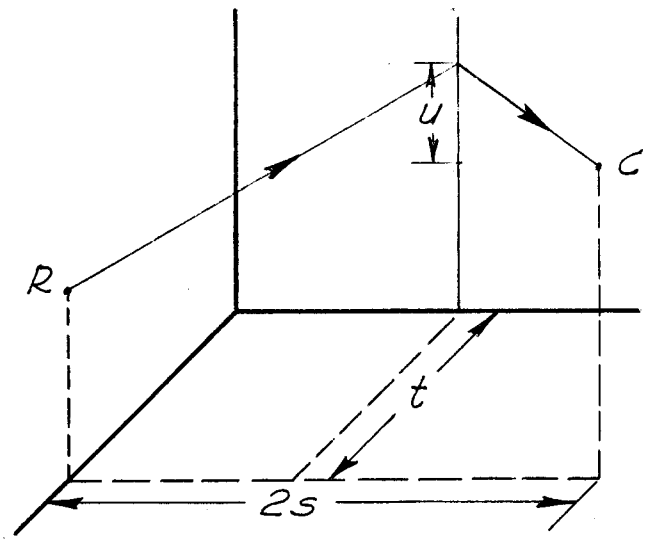

TOWER SCATTERING GEOMETRY
Figure 13

between the reactor and crew box and displaced a distance t from the center point in the perpendicular direction. The reactor-crew separation is 2s . A typical neutron reflects from a point on the beam located by the coordinate u where u is measured from that point on the beam which is at the same height as the reactor and crew. The total reflected flux is now:

$$F_c = \int_{-u_-}^{u_+} \frac{N_o\ (700)\ (9.62)}{(4\ \pi)^2\ \left[(s)^2 + t^2 + u^2\right]^2}\ du$$

where u+ is the distance to the upper end of the beam and u_ the distance to the lower end.

$$F_c = \frac{N_o\ (700)\ (9.62)}{32\ \pi^2\ \lambda^3} \left\{ \frac{u_+\ \lambda}{\lambda^2 + u_+^2} + \frac{u_-\ \lambda}{\lambda^2 + u_-^2} + \tan^{-1}\frac{u_+}{\lambda} + \tan^{-1}\frac{u_-}{\lambda} \right\} \tag{3.1}$$

where $\lambda = \sqrt{s^2 + t^2}$.

For either tower, the parameters are:

$$s = 32.5 \text{ ft.}$$

$$t = 100 \text{ ft.}$$

$$u^+ = 100 \text{ ft.}$$

$$u^- = 200 \text{ ft.}$$

for an operating altitude of 200 ft. For the bridge, the parameters are:

$$s = 32.5 \text{ ft.}$$

$$t = 100 \text{ ft.}$$

$$u^+ = 100 \text{ ft.}$$

$$u^- = 100 \text{ ft.}$$

The resultant backgrounds are easily found to be:

$$\% \text{ B towers} = 10.1\%$$

$$\text{bridge} = 4.4\%.$$

The calculation of the scattering from the cross member requires a different geometry. This is shown in Fig. 14.

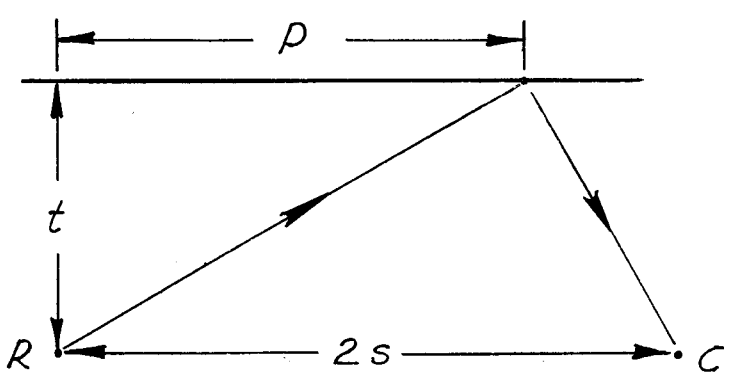

CROSS-MEMBER SCATTERING
Figure 14

The scattered flux is now

$$F_c = \int_0^{2s} \frac{N_o\ (700)\ (9.62)}{4\ \pi\ (p^2 + t^2)} \frac{dp}{4\ \pi\ \left[(2\ s - p)^2 + t^2\right]}$$

$$= \frac{N_o\ (700)\ (9.62)}{16\ \pi^2} \int_0^{2s} \frac{dp}{(p^2 + t^2)\ \left[(2\ s - p)^2 + t^2\right]} .$$

The integral can be evaluated by the method of partial fractions and the result is:

$$F_c = \frac{N_o\ (700)\ (9.62)}{32\ \pi^2\ (s^2 + t^2)\ t} \left\{ \tan^{-1}\left(\frac{2\ s}{t}\right) + \left(\frac{t}{2\ s}\right) \log\left[1 + \frac{4\ s^2}{t^2}\right]\right\} . \qquad (3.2)$$

The parameters are now:

$$s = 32.5 \text{ ft.}$$

$$t = 100 \text{ ft.}$$

and the resultant background becomes:

$$\%\ B \text{ cross-member} = 2.4\ \%.$$

The total structural scattering is now

% Tower	10.1	~ 10.1
Bridge	4.4	29.8
Cross-member	2.4	15.6
Total	16.9 %	55.5 %.

The second column indicates the results of increasing the operating altitude to 250 feet. It is clear that the reactor and crew must be 100 ft. below the tower top. This requirement, coupled with the previously determined minimum operating altitude of 200 ft. resulted in the requirement of a 300 ft. tower.

It should be mentioned that the γ-ray background can be calculated by the

the same techniques using a cross section, corresponding to 1 Mev γ-rays, of

$$\sigma = 27.2 \text{ cm}^2/\text{lb}.$$

However, since the results of the albedo experiments[5] indicate that the reflected γ-rays at about 180° are completely degenerated in energy, it will always be possible to screen these out with ease.

B) Aircraft Structure Scattering

In this calculation specifications for the B-36 airplane were used to calculate neutron scatter from various components of the air frame.

A reactor-crew separation of 65' was assumed. The reactor was assumed to be centrally located with respect to the wing base.

Scatter From Wings

Since the wings (39,000 lb. of Al) carry the fuel load ($\sim$175,000 lb. full load) an albedo calculation is in order for wing scatter of fast neutrons.

The bottom of the wing assembly meets the fuselage approximately at the center line of the body group. It is assumed that the the reactor and shield may be taken as a sphere of 6-foot radius of which half extends below the bottom surface of the wing and that radiation emerges from the shield with a cosine distribution about the normal.

Each wing is taken to be 115' long, 9' wide at the top and 25' wide at the base and it is assumed that all of the wing area is located on the line formed by the intersection of the wing and a plane which passes through the center of the reactor and is normal to the fuselage axis.

It has been shown (Sec. II F) that for cosine emergent radiation, the flux at a point on the wing distant D from the center of the reactor is given by

$$F = \frac{N_o \, r_1}{6 \, \pi^2 \, D^3} \qquad r_1 = \text{radius of the reactor}$$

if $D/r_1 \geq 2$. For smaller values of D, the flux is larger. One underestimates

the flux by using this expression over the whole range of D. The flux reaching the crew is then

$$F_c = \frac{N_o \, 2 \, r_1 \, \alpha}{6 \, \pi^2} \int_{r_1}^{115} \frac{dx}{x^3} \, \frac{\left(25 - \frac{16x}{115}\right)}{4 \, \pi \, (\ell^2 + x^2)}$$

where $\alpha (= 0.2)$ is the albedo, ℓ is the reactor crew separation (65') and $r_1 = 6$. This gives

$$F = \frac{N_o \, r_1 \, \alpha}{12 \, \pi^3} \left\{ \frac{25}{2} \left(\frac{1}{\ell^2} \left[\frac{1}{r_1^2} - \frac{1}{115^2} \right] + \frac{1}{\ell^4} \ln \frac{r_1^2}{\ell^2 + r_1^2} - \ln \frac{115^2}{\ell^2 + 115^2} \right) + \right.$$

$$\left. - \frac{16}{115} \left(\frac{1}{\ell^2} \left[\frac{1}{r_1} - \frac{1}{115} \right] + \frac{1}{\ell^3} \tan^{-1} \frac{r_1}{\ell} - \tan^{-1} \frac{115}{\ell} \right] \right) \right]$$

and substituting values into this equation

$$F/N_o = 0.258 \cdot 10^{-9} = 21.5\% \text{ B.G.}$$

Engine Scatter

The six reciprocating engines bulge below the wings with a projected area at the reactor of approximately 70 ft.^{2} per pair at distances of 17, 37 and 46 ft. from the outside of the reactor. The number of neutrons scattered to the crew is then, using an albedo calculation,

$$\frac{F}{N_o} = \frac{70 \, \alpha}{(4\pi)^2 \, (30.48)^2} \left[\frac{1}{(17)^2 \, (17^2 + 65^2)} + \frac{1}{(37)^2 \, (37^2 + 65^2)} + \frac{1}{(46)^2 \, (46^2 + 65^2)} \right]$$

$$= \overset{1.553 \times 10^{-10}}{.928} \cdot 10^{-10} = \overset{12.5\%}{7.8\%} \text{ B.G.}$$

The two jet engine assemblies are approximately 80 ft. from the reactor and have a total projected area of about 180 ft^2. The resulting flux is only 0.3% of background.

Tail Scatter

The projected area of the vertical tail assembly as seen from the reactor is approximately 49 ft^2 and the leading edge is about 124 ft. from the crew and 59' behind the reactor. Then

$$\frac{N}{N_o} = \frac{1}{(30.48)^2} \cdot \frac{1}{4\pi\,(59)^2} \cdot \frac{\alpha \cdot 49}{4\pi(124)^2} = 1.25 \cdot 10^{-12}$$

$$\frac{N}{N_1} = 0.1\%\ \text{B.G.}$$

If we take the effectiveness of rearward neutrons for air scattering to be only 1/20 of that of the forward neutrons to cover the case in which most of the neutrons are emitted in the rearward direction, the effective background due to the tail is still only

$$B_{tail} = (20)\ (0.1) = 2\%.$$

Fuselage Scatter

If the crew box does not fit snugly in the nose of the ship but instead is mounted in the upper portion as indicated in Fig. 15 there will be a large

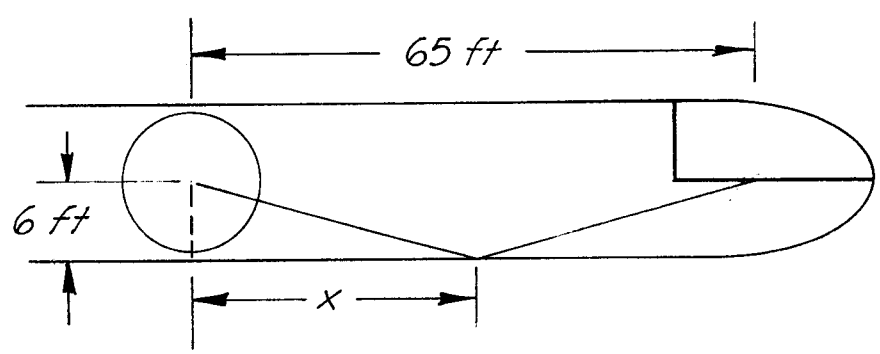

FUSELAGE SCATTERING
Figure 15

component of scattering from the fuselage. If one assumes the fuselage weight to be uniformly distributed along the length of the plane and uses the single scattering approximation with a point source representing the reactor one finds approximately

$$\frac{N}{N_o} = \int_{-\infty}^{\infty} \frac{1}{4\pi\,(6^2 + x^2)} \cdot \frac{\Sigma\, W}{4\pi\,(6^2 + [65 - X]^2)}$$

where W is the weight of the fuselage per unit length, Σ is the scattering cross section per unit weight. Using $W = 890$ lb/ft and $\Sigma_{al} = 16.8\ cm^2/lb$

$$\frac{N}{N_o} = \frac{890 \cdot 16.8}{(4\pi)^2 \cdot (30.48)^4} \cdot \frac{2\pi}{6} \cdot \frac{1}{[4 \times 6^2 + 65^2]}$$

$$\frac{N}{N_o} = 26.3 \cdot 10^{-9}$$

or a background of

$$B_{fuselage} = 2200\% \text{ of air scattering.}$$

While this represents a gross overestimate it seems clear that it will be necessary to lower the bulkhead so as to seal off the nose in any such crew shield design.

IV. ACKNOWLEDGMENT

The authors wish to thank Mr. R. E. Adams of the Consolidated Vultee Aircraft Corporation for making available to us the specifications for the B-36. It is a pleasure to record several helpful conversations with Mr. Henry E. Stern and Mr. C. H. Bernard, also of Convair.

V. REFERENCES

(1) "Proposal for a Divided Shield Testing Facility," Blizard, E. P., Clifford, C. E., Meem, J. L., Ritchie, R. H. and Simon, A., ORNL CF 52-4-85.

(2) Biram, M. and Tate, J. H., AERE T/R 563.

(3) Plesset, M. S., Rand-196. This report considers the uncollided ground scattering for a geometry which is identical to that of the proposed TSF. No account is taken of air collisions en route.

(4) Simon, A., ORNL CF 51-12-185.

(5) Hungerford, H. E., ORNL CF 52-4-99.

(6) The function $E_n(x) = \int_1^\infty e^{-ux} u^{-n} du$ is tabulated in a Montreal Laboratory report MT-1.

(7) "Report of the Shielding Board," ANP-53.

(8) Marshak, R. E., Rev. Mod. Phys. 19, 185(1947).

(9) Ibid, P. 227.

(10) Bethe, H. A., Tonks, L. and Hurwitz, H., Phys. Rev. 80, 11(1950).

(11) Stratton, J. A., "Electromagnetic Theory," P. 573.

(12) Bellman, R., Marshak, R. E. and Wing, G. M., Phil. Mag. 42, 97(1949).

(13) Sneddon, I., "Fourier Transform," P. 232.

VI. APPENDIX A

Theoretical Evaluation of the Albedo

Bethe[1] has given an expression for the albedo which may be applied when absorption is small ($\sigma_a/\sigma_s \ll 1$). However, a more complete theory of reflection of neutrons by a semi-infinite solid for any value of $\frac{\sigma_s}{\sigma_a}$ in the solid is now available[2].

Approximate the reactor-crew configuration by supposing that an isotropic source and receiver are located a distance d above the ground which is large compared with the separation distance S. Little error is made in taking S = 0 to simplify the following discussion. Since $d \gg \lambda$, (where λ is the mean free path of neutrons in the soil) the intensity of the neutron current on the ground

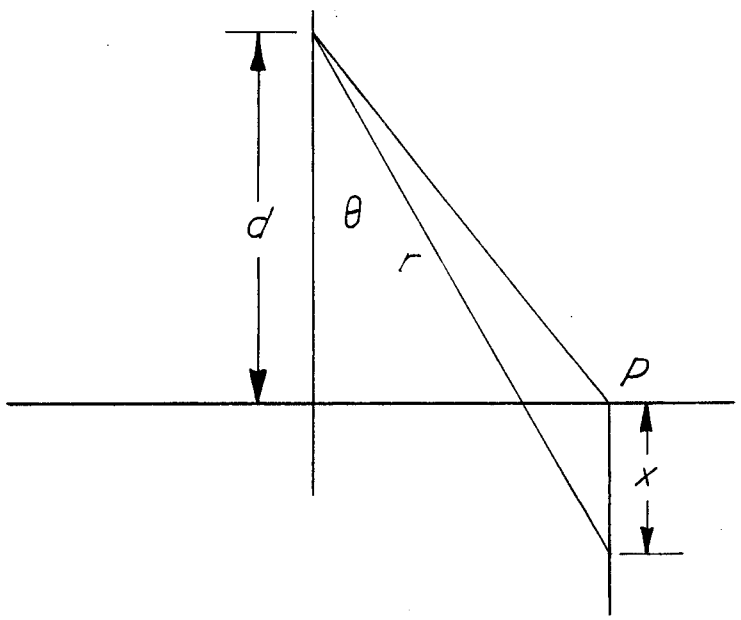

ALBEDO CALCULATION
Figure A1

(1) Bethe, H. A., Rev. Mod. Phys., 9, 153(1937), see also RAD-196-Plesset, M.

(2) Adler, F. T., MT-72, Halpern, O., Luneberg, R. and Clark, O., Phys. Rev. 53, 173(1938), Schuchard, E. A. and Uehling, E. A., Phys. Rev., 58, 611, (1940).

arriving from the source will vary slowly over the surface compared with its variation in the interior of the soil. Then to a good approximation, one may assume that the neutron density in the ground may be treated as a one dimensional problem. Thus if unit neutron current arrives at the point P on the surface at an angle θ to the normal $\rho(x)$, the neutron density in the soil at x below P, if scattering is isotropic and no energy loss occurs, is given by

$$\rho(x) = \frac{\epsilon}{2}\int_0^\infty \rho(x')\, E|x - x'|\, dx' + \frac{e^{-x/\mu}}{\mu}$$

in a neighborhood of point P which is large in dimension compared with the neutron mean free path λ in the soil. x is measured in units of mean free path. ϵ is the ratio of scattering to total cross section in the ground, $\mu = \cos\theta$ and $E(y) = \int_1^\infty e^{-yu}\frac{du}{u}$.

Then the number of neutrons which are scattered back to the receiver from the soil beneath a small area dA at P is, for a source of unit strength

$$dN = dA \int_{r = d/\mu}^{\infty} \frac{1}{4\pi r^2} \cdot \epsilon\, dx\, \rho\left(\frac{r\mu - d}{\lambda}\right) \cdot e^{-\frac{r - d/\mu}{\lambda}} \cdot \frac{1}{4\pi r^2} .$$

Using the fact that $r \gg (r\mu - d) = x \cdot \lambda$ for significant portions of the integration,

$$dN = \frac{dA\mu}{(4\pi r^2)^2} \int_0^\infty \epsilon\, dx\, \rho(x)\, \frac{e^{-x/\mu}}{\mu}$$

but the angular distribution of the emerging neutrons, i.e., the number of neutrons emerging between μ and $\mu + d\mu$ is

$$\psi(\mu) = \frac{\epsilon}{2\mu} \int_0^\infty \rho(x)\, e^{-x/\mu}\, dx$$

so that

$$dN = \frac{dA\mu}{8\pi^2 r^4}\, \psi(\mu).$$

Then

$$N = \int_0^{\pi/2} \frac{\sin\theta\, d\theta\, \psi(\mu)}{4\pi r^2} = \frac{1}{4\pi d^2} \int_0^1 \mu^2\, d\mu\, \psi(\mu).$$

Air attenuation has been neglected. The function $\psi(\mu)$ is given by[3]

$$\psi(\mu) = \frac{(1-\epsilon)(1-\nu\mu)^2}{\nu^2 \epsilon \mu}\, \psi_h^{\,2}(\mu)$$

where $\psi_h(\mu)$ is the angular distribution in the Milne problem with capture and is tabulated [4]. ν is the real solution of

$$\epsilon\, \frac{\tanh^{-1}\nu}{\nu} = 1.$$

The quantity $12\pi d^2 N$ is plotted in Fig. A2.

One may estimate an "albedo" for soil on the basis of this theory by making the following assumptions: a) Neutrons emitted by the source are monoenergetic at 6 Mev; b) the composition of soil is 10% H atoms by number and 90% heavier elements; c) collision with a hydrogen atom is equivalent to an absorption; d) scattering and reaction cross sections for atoms other than hydrogen in the soil may be calculated from the continuum model of the nucleus[5].

Assuming a nuclear radius of 9.10^{-13} cm. for the heavier elements, one finds $\sigma_{reaction} = 3.81$ barns, $\sigma_{scatter} = 3.56$ barns. Then using $\sigma_{hydrogen}$

---

(3) Davison, B. and Placzek, G., MT-118.

(4) Lecaine, J., Can. J. Res., A28, 242 (1950).

(5) Feshbach, H. and Weisskopf, V. F., Phys. Rev., 76, 1550 (1949). NYO-636.

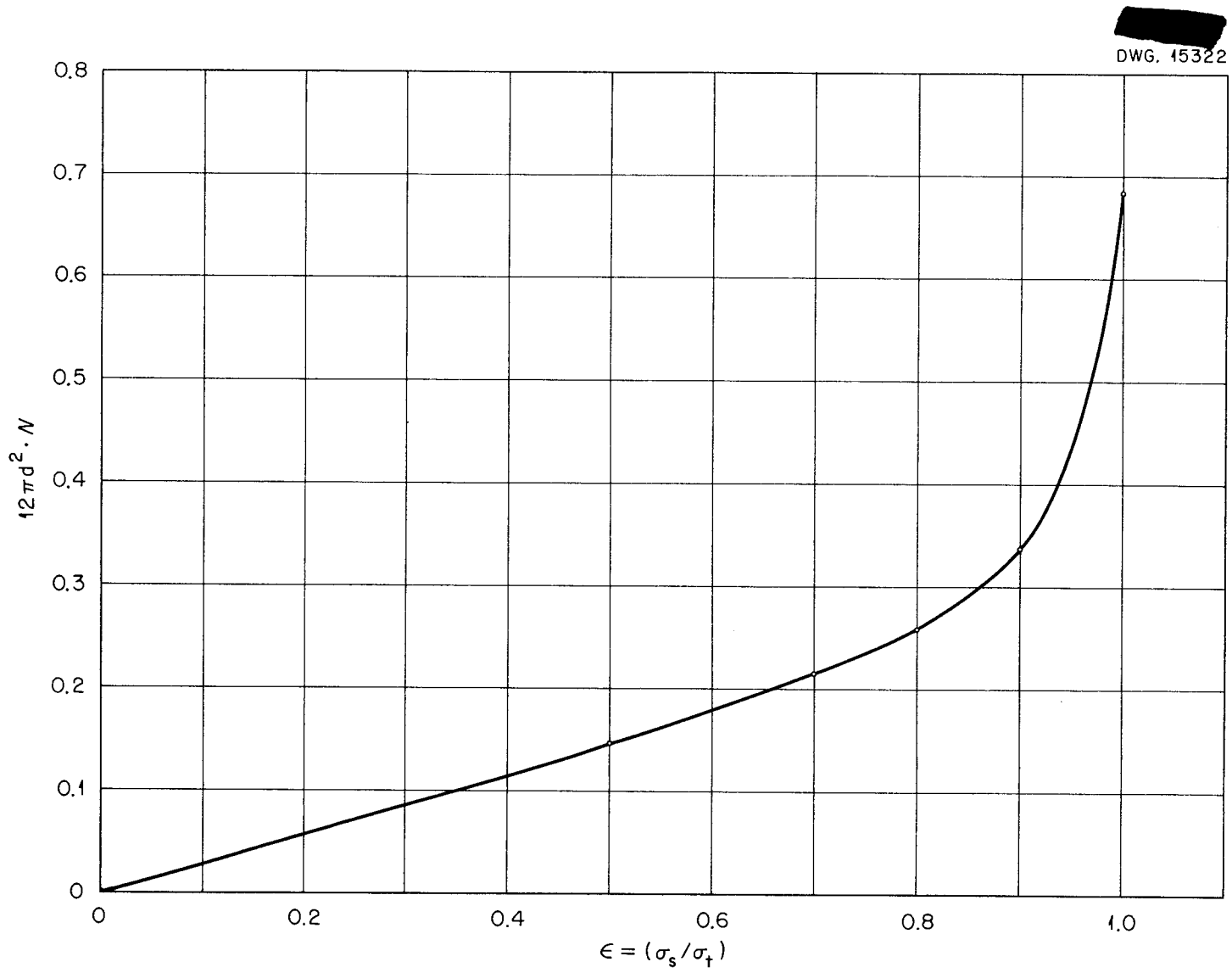

Fig. A2. Reflected Neutron Flux as a Function of Ratio of Scattering to Absorption in the Ground.

= 1.5 barns, ϵ = 0.45 and from the graph 12 $\pi d^2 N$ = 0.13. This is to be compared with the experimental result 12 $\pi d^2 N$ = 0.144. The same calculation carried out for water yields a value for ϵ of 0.34 and (12 $\pi d^2 N$) = .0097 as compared with $(12\ \pi d^2 N)_{experiment}$ = .0096.

The excellent agreement is obviously coincidental in view of the approximations made, but the results are of some interest.

APPENDIX B

Effects of Preferential Forward Scattering and Air Attenuation

To examine the effects of anisotropic scattering upon the number of neutrons reaching the crew neglect energy degradation in neutron collisions with air atoms and assume that the scattering law is

$$F(\hat{\Omega},\hat{\Omega}') = \frac{1}{4\pi}\left[1 + \cos\theta_o\right] = \frac{1}{4\pi}\left[P_o(\mu_o) + P_1(\mu_o)\right]$$

where $F(\hat{\Omega},\hat{\Omega})$ is the probability of scattering from $\hat{\Omega}$ to $d\hat{\Omega}'$ at $\hat{\Omega}'$ per unit solid angle and $\theta_o = \cos^{-1}\mu_o$ is the angle between $\hat{\Omega}$ and $\hat{\Omega}'$. This is a reasonable approximation to the sort of scattering on the nucleus(1).

Let $\psi(\bar{r},\hat{\Omega})$ be the neutron flux at $\bar{r}$ with direction in $d\hat{\Omega}$ about $\hat{\Omega}$ and consider the one-dimensional problem, expanding ψ in spherical harmonics

$$\psi(\bar{r},\hat{\Omega}) = \psi(Z,\mu) = \sum_{\ell} \frac{2\ell+1}{4\pi}\psi_{\ell}(Z)P_{\ell}(\mu)$$

where

$$\psi_{\ell}(Z) = \int d\hat{\Omega}\, P_{\ell}(\mu)\ \psi(Z,\mu).$$

The transport equation with no capture reads

$$\mu\frac{\partial\psi}{\partial Z} + \psi(Z,\mu) = \int d\hat{\Omega}'\, F(\mu_o)\ \psi(Z,\mu') + \frac{\delta(Z)}{4\pi}$$

(1) NYO-636, P. 91.

$$= \frac{1}{4\pi} \int \psi(Z,\mu') \left[P_o(\mu_o) + P_1(\mu_o) \right] d\Omega' + \frac{\delta(Z)}{4\pi}$$

where Z is measured in units of the mean free path and where a monoenergetic source is assumed.

Now

$$P_\ell(\mu_o) = P_\ell(\mu)\, P_\ell(\mu') + 2 \sum_{m=1}^{\ell} (-1)^m \frac{(\ell - m)!}{(\ell + m)!} P_\ell^m(\mu)\, P_\ell^m(\mu') \cos m\,(\Phi - \Phi')$$

Carrying out the integration in $\hat{\Omega}'$ over the azimuthal angle Φ' and taking the Fourier transform of the equation:

$$f\left[\psi(Z, \mu)\right] = \Phi(y, \mu) = \int_{-\infty}^{\infty} e^{iyZ}\, \psi(Z, \mu)\, dZ$$

one finds

$$(1 - iy\mu)\, \Phi(y, \mu) = \frac{1}{4\pi} \left\{ P_o(\mu)\, \Phi_o(y) + P_1(\mu)\, \Phi_1(y) \right\} + \frac{1}{4\pi}$$

where $\Phi_\ell(y) = \int d\hat{\Omega}\, \Phi(y, \mu)\, P_\ell(\mu)$. Dividing through by $(1 - iy\mu)$ and taking the zeroth and first moments with respect to μ one obtains

$$\Phi_o(y) = \Phi_o(y) \frac{\tan^{-1} y}{y} + \Phi_1(y)\, f_1(y) + \frac{\tan^{-1} y}{y}$$

$$\Phi_1(y) = \Phi_o(y)\, f_1(y) + \Phi_1(y)\, f_2(y) + f_1(y)$$

where

$$f_1(y) = \frac{i}{y}\left(1 - \frac{\tan^{-1} y}{y}\right)$$

$$f_2(y) = \frac{1}{y^2}\left(1 - \frac{\tan^{-1} y}{y}\right).$$

Solving the two equations for $\Phi_o(y)$

$$\Phi_o(y) = \frac{\frac{\tan^{-1} y}{y}}{1 - \frac{\tan^{-1} y}{y}} \cdot -\frac{1}{y^2}$$

Using the relation between the point source solution $g_o(r)$ and the plane solution $\psi_o(Z)$, i.e.

$$G_o(r) = -\frac{1}{2\pi r}\left[\frac{\partial \psi \cdot (Z)}{\partial Z}\right]_{Z = r} = -\frac{1}{2\pi r}\left[\frac{\partial}{\partial Z}\left(\frac{1}{2\pi}\int_{-\infty}^{\infty} \Phi_o(y)\, e^{-iZy}\, dy\right)\right]_{Z = r}$$

$$= -\frac{1}{2\pi r}\left[\frac{1}{2\pi i}\int_{-\infty}^{\infty} dy\, e^{-iyZ}\left(\frac{\tan^{-1} y}{1 - \frac{\tan^{-1} y}{y}} - \frac{1}{y}\right)\right]_{Z = r}$$

The first complex integral is just the solution for the point source with isotropic scattering(2), while the second gives the effect of anisotropic scattering. The first integral may be expressed as a real integral while the second has the value $i\pi$. Then

$$G_o(r) = (\text{Isotropic solution}) - \frac{1}{4\pi R\lambda}$$

$$G_o(R) = \frac{1}{4\pi\lambda R}\left\{3 + \int_1^{\infty} \frac{e^{-\mu R/\lambda}\, d\mu}{\left\{1 - \frac{1}{\mu}\tanh^{-1}\frac{1}{\mu}\right\}^2 + \left(\frac{\pi}{2\mu}\right)^2} - 1\right\}$$

where the solution has been expressed in terms of the actual distance from the source, $R = \lambda r$.

Assume R/λ small, express the integral as a series in powers of $\frac{1}{\mu}$ and subtract the term representing the unscattered flux. This gives

$$G_o(R) = \frac{1}{4\pi\lambda R}\left\{2 - \left(0.4674\, E_2(R/\lambda) + 0.1149\, E_4(R/\lambda) + \ldots\right)\right\}$$

(2) Davison, B. and Placzek, G., MT-4.

where $E_n(x) = \int_1^\infty e^{-xu} u^{-n} du$.

The function $4\pi\lambda R\ G_o$ is plotted in Fig. B1 curve D as a function of R/λ. On the same graph are plotted the single, isotropically scattered flux (curve A) isotropic scattering, transport solution (curve B) and the single anisotropically scattered $(\frac{1}{2}[1 + \cos\theta])$ flux (curve C), all due to a point source of unit strength. It is seen that the factor of 2 used to account for anisotropic scattering in obtaining the standard background figure of $1 \cdot 2 \cdot 10^{-11}\ N_o$ is justified, particularly since the scattering is probably more isotropic than that given by the law $\frac{1}{2}(1 + \cos\theta)$ and in addition some energy loss must occur in elastic and inelastic collisions.

Curve E, Fig. B1 gives the quantity $4\pi R\lambda x$ {flux} due to a unit source assuming single isotropic scattering, exponential attenuation, no energy loss and no absorption (taken from NEPA-997). It is seen that at one-third of a mean free path from the source the flux is only half that predicted by the transport theory, while the flux found from single scatter with no exponential attenuation is a good approximation to the transport solution over the whole range of R. This indicates that the proper procedure in calculating air scattered neutrons by first scatter is to <u>omit the exponential factor</u>.

The effect of energy degradation upon neutrons which scatter on air atoms and reach the crew compartment may be investigated by beginning with the "one-velocity" Boltzmann equation in one dimension(3)

$$\left[\mu \frac{\partial}{\partial x} + 1\right] \Phi(x, \hat{\Omega}, \eta) = \int d\hat{\Omega}\, \Phi(x, \mu', \eta)\ g(\mu_o, \eta) + \text{Source Term.}$$

Where x is the space variable measured in units of mean free path at the source

(3) Marshak, R. E., <u>Rev. Mod. Phys.</u> <u>19</u>, 227, (1947).

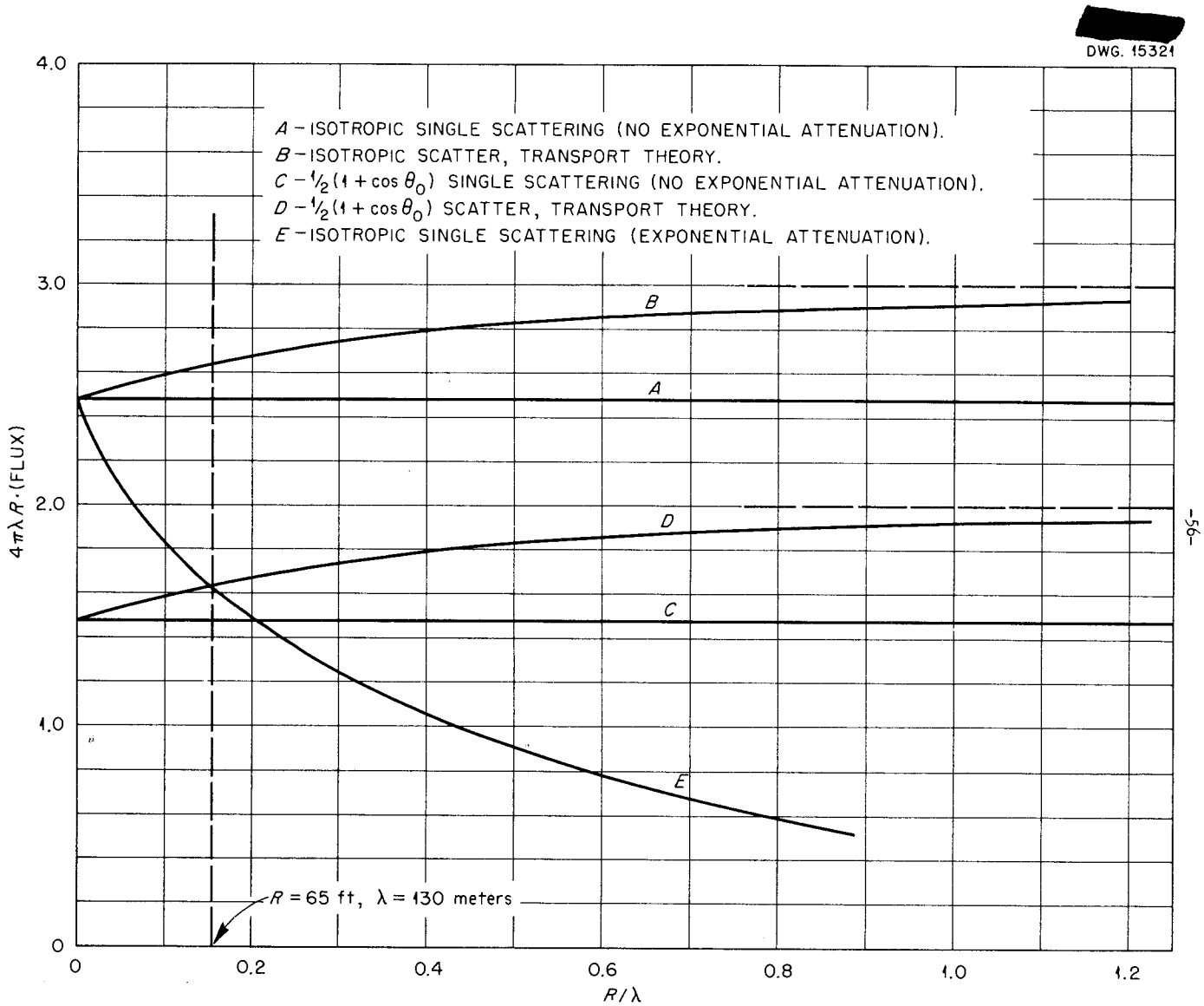

Fig. B1. Neutron Air Scattering.

energy, $\Phi(x, \hat{\Omega}, \eta) = \int_0^\infty e^{-\eta u} \psi(x, \hat{\Omega}, u)\, du$ i.e., the Laplace transform in u, the logarithmic energy variable, of $\psi(x, \hat{\Omega}, u) \cdot \psi(x, \hat{\Omega}, u)\, d\hat{\Omega}\, du$ describes the neutron flux with direction vector in $d\hat{\Omega}$ about $\hat{\Omega}$ lying in the interval du about u.

The assumptions inherent in the above equation are: a) constant mean free path at the source energy which is assumed unique; b) no capture occurs (this is not essential but is made for the sake of simplicity as well as for lack of knowledge of cross sections; c) the medium consists of a single element; d) scattering is isotropic in the center of mass system.

We assume as in Section IIC that the dose-energy variation may be expressed as some power of the energy, eg. $E^{\eta} \propto e^{-\eta u}$. Again proceeding as in Section IIC we find that the asymptotic form of the dose at a distance R from a unit point source is given by $\frac{1}{4 \pi D R} e^{-R/L}$

where

$$D = \frac{\lambda}{3 \{1 - g_1(\eta)\}}$$

$$L = \frac{\lambda}{\sqrt{3 \{1 - g_0(\eta)\} \{1 - g_1(\eta)\}}}$$

The value of L obtained by using $\eta = 0.35$ and an approximate expression[4] for g_0 and g_1 is 2.65 λ. Since the equivalent absorption is small and the diffusion length is correspondingly large one expects that the true solution will approach closely the asymptotic form in a fraction of a mean free path and that the difference will be small even for small values of R. The effect of preponderent forward scatter is to increase L. However, this is not critical in the applications discussed in this paper.

(4) Loc Cit. P. 228.