CENTRAL RESEARCH LIBRARY
DOCUMENT COLLECTION

[redacted]

DECLASSIFIED

CLASSIFICATION CHANGED TO:
BY AUTHORITY OF: TID-1116
BY: R. Page 10/26/56

ORNL-1217
Physics and Mathematics

MARTIN MARIETTA ENERGY SYSTEMS LIBRARIES
3 4456 0352990 1

Cy. 7a

CLASSIFICATION CANCELLED
DATE 7/2/79 (DOE Admin Order)
DECLASSIFICATION OFFICER
OAK RIDGE NATIONAL LABORATORY
AUTHORITY DELEGATED BY ERDA 8-15-77

THE ATTENUATION OF NEUTRONS BY AIR DUCTS IN SHIELDS

LABORATORY RECORDS

OAK RIDGE NATIONAL LABORATORY
CENTRAL RESEARCH LIBRARY
CIRCULATION SECTION
4500N ROOM 175
LIBRARY LOAN COPY
DO NOT TRANSFER TO ANOTHER PERSON
If you wish someone else to see this report, send in name with report and the library will arrange a loan.
UCN-7969 (3 9-77)

OAK RIDGE NATIONAL LABORATORY
OPERATED BY
CARBIDE AND CARBON CHEMICALS COMPANY
A DIVISION OF UNION CARBIDE AND CARBON CORPORATION
UCC
POST OFFICE BOX P
OAK RIDGE, TENNESSEE

[redacted]

[redacted]

[redacted]

ORNL-1217

This document consists of 24 pages.
Copy 7 of 166 copies. Series A.

Contract No. W-7405-eng-26

THE ATTENUATION OF NEUTRONS BY AIR DUCTS IN SHIELDS

Part I: Theory

A. Simon and C. E. Clifford

Date Issued

NOV 11 1952

OAK RIDGE NATIONAL LABORATORY
operated by
CARBIDE AND CARBON CHEMICALS COMPANY
A Division of Union Carbide and Carbon Corporation
Post Office Box P
OAK RIDGE, TENNESSEE

[redacted]

MARTIN MARIETTA ENERGY SYSTEMS LIBRARIES

3 4456 0352990 1

[redacted]

TABLE OF CONTENTS

I. INTRODUCTION 1

II. WALL SCATTERING IN A STRAIGHT SECTION 1

A) Single Scattering (albedo) 1

B) Single Scattering in the Walls 6

C) Multiple Reflections (albedo) 9

III. ATTENUATION DUE TO A SINGLE BEND 15

IV. ATTENUATION DUE TO MANY BENDS 18

V. ACKNOWLEDGEMENT 20

I. INTRODUCTION

The observed attenuation of neutrons by air ducts in shields can be understood on a simple phenomenological picture. In Section II it will be shown that the wall scattering in a straight duct is small compared to the uncollided neutrons which have traveled directly in air from one end of the duct to the other. In Section III the attenuation due to a duct which consists of two straight sections joined at an angle θ is considered. Finally the formula is extended to the case of any number of straight sections joined at arbitrary angles. Part 2, Experiment, will be issued shortly.

II. WALL SCATTERING IN A STRAIGHT SECTION

Consider the neutron attenuation of a long thin circular air duct in an attenuating medium. It is assumed that the inner mouth of the duct is adjacent to a plane isotropic source of neutrons of strength n_o per unit area. There will then be a flux of neutrons at the outer mouth of the duct, due to those neutrons which have traveled directly in air from the inner mouth of the duct, of an intensity given by

$$F = \frac{n_o \pi \delta^2}{2\pi \ell^2} = n_o \frac{\delta^2}{2\ell^2} \tag{1}$$

where δ is the radius and ℓ the length of the duct.

In addition to this flux, there will be contributions due to neutrons which have collided with the walls. The effects of single scattering in the walls can be estimated in two ways--one is by use of an albedo approach.

A) Single Scattering (albedo)

It is assumed that the walls of the duct reradiate a flux that is proportional to the flux incident upon it. The constant of proportionality, α', is the

albedo. The emergent neutrons are assumed to be essentially undegraded in energy and it is assumed that they have either an isotropic or a cosine distribution about the normal to the wall. For simplicity, the source of neutrons is assumed to be a point A of strength N_0 emitting isotropically into the forward hemisphere and located at the center of the mouth of the duct. (See Fig. 1). The detector, similarly, is at the center of the other end; point C.

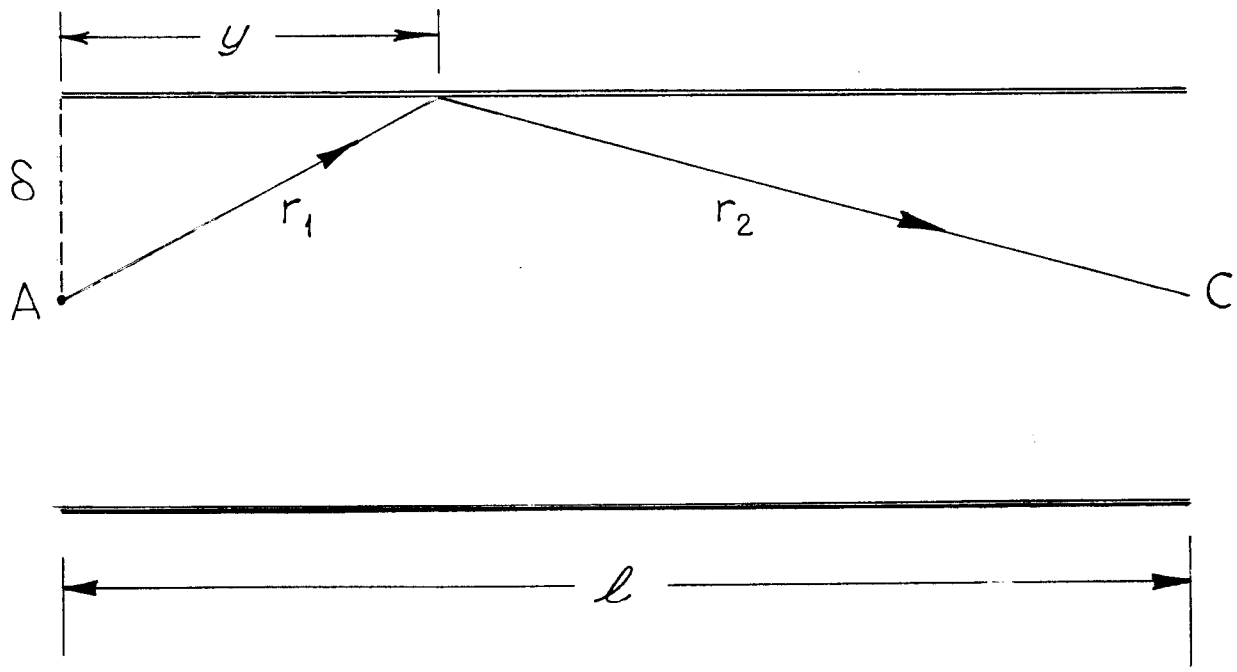

Figure 1

Consider, first, the effect of isotropic reradiation. The flux at C due to a single reflection from the wall is:

$$F_c = \int_0^{\ell} \frac{N_o}{2\pi r_1^2} \cdot \frac{\delta}{r_1} \cdot \frac{\alpha'}{2\pi r_2^2} \, 2\pi \delta \, dy$$

$$= \frac{N_o \alpha' \delta^2}{2\pi} \int_0^{\ell} \frac{dy}{(\delta^2 + y^2)^{3/2} \left[\delta^2 + (\ell - y)^2\right]}$$

$$= \frac{N_o \alpha' \lambda}{2\pi \ell^2} \int_0^1 \frac{dt}{(\lambda + t^2)^{3/2} \left[\lambda + (1 - t)^2\right]}$$

where $\lambda = (\delta/\ell)^2$ and $t = y/\ell$. It will be assumed throughout this report that only ducts which are long compared to their diameter are to be considered. In that case $\lambda << 1$ and the integrand will be sharply peaked at $t = 0$ and $t = 1$. The integrand rises to the value $\lambda^{-3/2} = \left(\frac{\ell}{\delta}\right)^3$ at $t = 0$. At $t = 1$, the maximum value is $\lambda^{-1} = \left(\frac{\ell}{\delta}\right)^2$. Hence, the major contribution to the integral is obtained by neglecting the second peak and integrating up to some upper limit β, where β is of the order of 1/2. Now

$$F_c \cong \frac{N_o \alpha' \lambda}{2\pi \ell^2} \int_0^{\beta} \frac{dt}{(\lambda + t^2)^{3/2} \left[\lambda + (1 - t)^2\right]}$$

and in this range, λ can be neglected compared to $(1 - t)^2$.

$$\therefore F_c \cong \frac{N_o \alpha' \lambda}{2\pi \ell^2} \int_0^{\beta} \frac{dt}{(1 - t)^2 (\lambda + t^2)^{3/2}} .$$

This integral has been done exactly. However, the same result may be obtained more easily by noting that because of the sharp peaking of the integral, due to the quadratic, at $t = 0$ it is permissible to replace the $(1 - t)^2$ term by unity in the last equation. Then

$$F_c \cong \frac{N_o \alpha' \lambda}{2\pi \ell^2} \int_0^\beta \frac{dt}{(\lambda + t^2)^{3/2}} .$$

Now

$$\int \frac{dx}{(x^2 + a^2)^{3/2}} = \frac{x}{a^2 \sqrt{x^2 + a^2}}$$

$$F_c = \frac{N_o \alpha' \lambda}{2\pi \ell^2} \left[\frac{t}{\lambda \sqrt{t^2 + \lambda}} \right]_0^\beta$$

$$= \frac{N_o \alpha'}{2\pi \ell^2} \frac{\beta}{\sqrt{\beta^2 + \lambda}} \cong \frac{N_o \alpha'}{2\pi \ell^2} . \qquad (2)$$

Hence the entire effect of isotropic reradiation from the walls is to produce a flux at the mouth of the duct which is formally equal to the uncollided flux multiplied by the albedo.

In the case of cosine reradiation from the walls

$$F_c = \int_0^\ell \frac{N_o}{2\pi r_1^2} \frac{\delta}{r_1} \frac{2\delta}{r_2} \frac{\alpha'}{2\pi r_2^2} 2\pi \delta \, dy$$

$$= \frac{N_o \delta^3 \alpha'}{\pi} \int_0^\ell \frac{dy}{(\delta^2 + \lambda^2)^{3/2} \left[\delta^2 + (\ell - y)^2\right]^{3/2}}$$

$$= \frac{N_o \alpha'}{\pi \ell^2} (\lambda)^{3/2} \int_0^1 \frac{dt}{(\lambda + t^2)^{3/2} \left[\lambda + (1 - t)^2\right]^{3/2}}$$

where the notation is the same as before. The integral now has two symmetrical peaks at $t = 0$ and $t = 1$.

$$\therefore F_c = \frac{2 N_o \alpha'}{\pi \ell^2} (\lambda)^{3/2} \int_0^{1/2} \frac{dt}{(\lambda + t^2)^{3/2} [\lambda + (1 - t)^2]^{3/2}} .$$

In this range λ can be neglected compared to $(1 - t)^2$.

$$\therefore F_c \cong \frac{2 N_o \alpha'}{\pi \ell^2} (\lambda)^{3/2} \int_0^{1/2} \frac{dt}{(1 - t)^3 (\lambda + t^2)^{3/2}} .$$

Once again $1 - t$ can be replaced by unity and the ramaining integral evaluated as before. Then

$$F_c = \frac{2 N_o \alpha' \sqrt{\lambda}}{\pi \ell^2} = \frac{2 N_o \delta \alpha'}{\pi \ell^3} . \tag{3}$$

Thus the effect of cosine reradiation by the walls is to provide a flux at the outer mouth of the duct which varies as the inverse cube of the length of the duct.

The reradiation from the walls of the duct, per unit solid angle, may be written in the more general form

$$\frac{dF}{d\Omega} = \frac{A + 2B \cos \theta}{2 \pi} \alpha' F_{inc} \tag{4}$$

where F_{inc} = flux incident on wall.

α' = albedo of wall

and A and B express the relative percentages of isotropic and cosine reradiation respectively. By conservation of neutrons, however, one has

$$\int \frac{A + 2B \cos \theta}{2 \pi} \alpha' F_{inc} \, d\Omega = \alpha' F_{inc} . \tag{5}$$

$$\therefore A + B = 1 .$$

By the use of Eqs. (1), (2), (3) and (4), and noting that $N_o = n_o \pi \delta^2$, the flux at the mouth of the duct can be written

$$F_c = \frac{N_o}{2\pi \ell^2}\left(1 + A\,\alpha' + \frac{4B\,\alpha'\,\delta}{\ell}\right) \tag{6}$$

B) Single Scattering in the Walls

An alternative way of estimating the neutron flux is to consider the effects of single scattering in the walls of the duct. In this derivation it will be assumed that the scattering is isotropic and that there is no appreciable energy degradation. Consider a scattering at a point B in the wall located at a distance y down the length of the duct and at a depth x into the wall. See Fig. 2.

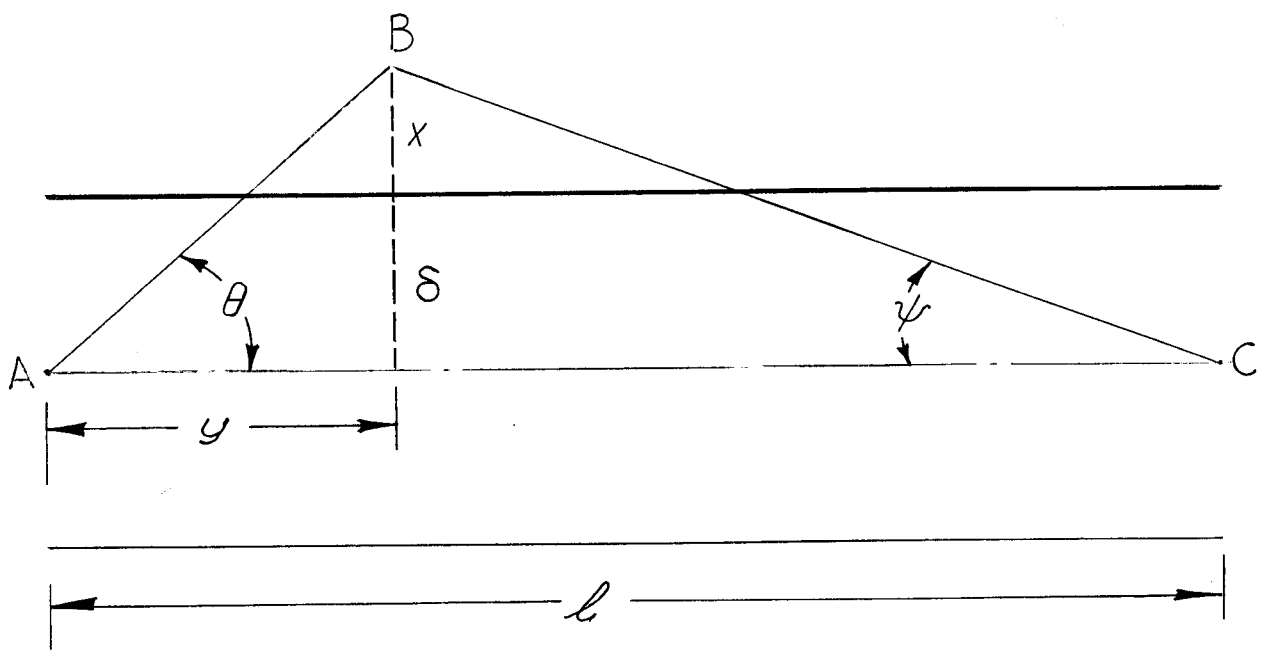

Figure 2

If d is the total length of travel in the wall, the probability of this scattering is

$$\frac{N_o \Sigma_s \, dV \, e^{-\Sigma_t d}}{2\pi \left[y^2 + (\delta + x)^2\right] 4\pi \left[(\ell - y)^2 + (\delta + x)^2\right]} \tag{7}$$

where

Σ_s = macroscopic scattering cross section

Σ_t = macroscopic total cross section

dV = volume element at B.

Now

$$d = \frac{x}{\sin\theta} + \frac{x}{\sin\psi}$$

$$= \frac{x}{x + \delta}\left\{\sqrt{(x + \delta)^2 + y^2} + \sqrt{(x + \delta)^2 + (\ell - y)^2}\right\},$$

and

$$dV = (x + \delta)\, d(x + \delta)\, d\Phi\, dy$$

where Φ is the angle of rotation about the duct axis. The total flux at c, integrating over Φ, becomes

$$F_c = \frac{N_o \Sigma_s}{4\pi} \int_0^{\ell} \int_0^{\infty} \frac{(x + \delta)\, dx\, dy\, e^{-\Sigma_t d}}{\left[y^2 + (\delta + x)^2\right]\left[(\ell - y)^2 + (\delta + x)^2\right]} . \tag{8}$$

Because of the quantity x in the numerator of the expression for d, the exponential results in a sharp peaking of the integrand at $x = 0$. Hence all slowly varying parts of the integrand can be replaced by their values at $x = 0$. The integral becomes

$$\int_0^{\ell} \frac{\delta\, dy}{(y^2 + \delta^2)\left[(\ell - y)^2 + \delta^2\right]} \int_0^{\infty} dx\, e^{-\frac{\Sigma_t q x}{\delta}}$$

where

$$q \equiv \sqrt{\delta^2 + y^2} + \sqrt{(\ell - y)^2 + \delta^2}$$

$$= \frac{\delta^2}{\Sigma_t} \int_0^{\ell} \frac{dy}{(y^2 + \delta^2)\ [(\ell - y)^2 + \delta^2]q} \quad .$$

Now q is almost a constant and equal to ℓ since $\delta << \ell$. Neglecting its variation over the region of integration

$$F_c \cong \frac{N_o\ \delta^2}{4\pi\ell}\left(\frac{\Sigma_s}{\Sigma_t}\right)\int_0^{\ell} \frac{dy}{(y^2 + \delta^2)\ [(\ell - y)^2 + \delta^2]}$$

$$= \frac{N_o}{4\pi\ell^2}\left(\frac{\Sigma_s}{\Sigma_t}\right)\lambda \int_0^{1} \frac{dt}{(\lambda + t^2)\ [\lambda + (1 - t)^2]}$$

where $\lambda = \left(\frac{\delta}{\ell}\right)^2$ and $t = \left(\frac{y}{\ell}\right)$

$$\frac{N_o}{2\pi\ell^2}\left(\frac{\Sigma_s}{\Sigma_t}\right)\lambda \int_0^{1/2} \frac{dt}{(\lambda + t^2)\ [\lambda + (1 - t)^2]} .$$

In this range, one can neglect λ $(<< 1)$ compared to $(1 - t)^2$ and replace $(1 - t)^2$ by unity as before

$$F_c = \frac{N_o}{2\pi\ell^2}\left(\frac{\Sigma_s}{\Sigma_t}\right)\lambda \int_0^{1/2} \frac{dt}{\lambda + t^2}$$

$$= \frac{N_o}{2\pi\ell^2}\left(\frac{\Sigma_s}{\Sigma_t}\right)\sqrt{\lambda}\ \tan^{-1}\frac{1}{2\sqrt{\lambda}} .$$

Finally, since $\frac{1}{2\sqrt{\lambda}} >> 1$, one has

$$\tan^{-1}\frac{1}{2\sqrt{\lambda}} \cong \frac{\pi}{2}$$

$$F_c = \frac{N_o\ \delta}{4\ell^3}\left(\frac{\Sigma_s}{\Sigma_t}\right) \tag{9}$$

Thus isotropic single scattering results in a flux which varies as the inverse cube of the length of the duct.

The agreement of this result with the previous albedo calculation assuming cosine reradiation is not completely unexpected. In a sense, the reradiation arriving at C (see Fig. 2) can be regarded as due to a uniform distribution of sources in the wall with an effective mean free path for the medium which is smaller than the actual one by the factor δ/ℓ. As is well known, such a uniform distribution of sources results in a cosine distribution of the radiation leaving the surface.

If one makes a reasonable estimate of Σ_s and Σ_t in water for a neutron energy of 3 Mev, it is found that the flux given by Eq. (10) is somewhat smaller than that predicted by Eq. (3) using the experimentally measured value of the albedo for water. This again is reasonable since the albedo includes the effects of multiple scatterings in the wall.

C) Multiple Reflections (albedo)

The calculation in Section A of the flux at C is incomplete since no account was taken of the effect of multiple reflections from the walls of the duct. This will now be done for the case of cosine reradiation by the walls. The location of an element of area $d\sigma$ in the wall will be specified by cylindrical coordinates (x, δ, Φ), where x is the distance measured down the duct from the mouth to the area $d\sigma$, σ is the radius of the duct and Φ is an azimuthal angle.

Let F(x) denote the total neutron flux per unit area emerging from a surface area $d\sigma_1$ at the position (x, Φ_x). This function must be independent of Φ_x by the symmetry of the problem. Recalling that this flux has a cosine distribution about the normal, the partial flux falling on another area at y, Φ_y due to this radiation is

$$dG\ (y,\ \Phi_y) = \frac{F\ (x)}{\pi}\ \frac{\cos\theta_1\ \cos\theta_2\ d\sigma_1}{(y - x)^2 + 2\ \delta^2 - 2\ \delta^2 \cos\ (\Phi_x - \Phi_y)}$$

where θ_1 = emerging angle at $(x,\ \Phi_x)$ and θ_2 = incident angle at $(y,\ \Phi_y)$, and the denominator is the square of the distance between the two elements of area.

The value of $\cos\theta_1$ can be found as follows. The location of $d\sigma_1$ at $(x,\ \Phi_x)$ is given by the vector $\vec{A} = \vec{x} + \vec{\rho}_x$ where $\vec{x}$ lies in the direction of the duct axis and $\vec{\rho}_x$ is the radial vector to the area. Similarly, the other area is at $\vec{B} = \vec{y} + \vec{\rho}_y$. Then

$$\cos\theta_1 = \frac{(\vec{A} - \vec{B})\cdot\vec{\rho}_x}{|A - B||\rho_x|} \qquad \cos\theta_2 = \frac{(\vec{B} - \vec{A})\cdot\vec{\rho}_y}{|B - A||\rho_y|}$$

now

$$(\vec{A} - \vec{B})\cdot\vec{\rho}_x = \rho_x^2\ (1 - \cos\Phi)$$

$$(\vec{B} - \vec{A})\cdot\vec{\rho}_y = \rho_y^2\ (1 - \cos\Phi)$$

where Φ is the relative azimuthal angle of the two areas.

$$\cos\theta_1\ \cos\theta_2 = \frac{\delta^2\ (1 - \cos\Phi)^2}{(y - x)^2 + 2\ \delta^2 - 2\ \delta^2 \cos\Phi}$$

since

$$\rho_x^2 = \rho_y^2 = \delta^2$$

$$\Phi = \Phi_x - \Phi_y$$

and

$$|A - B|^2 = \text{distance between the two areas.}$$

$$\therefore\ dG(y,\ \Phi_y) = \frac{\delta^2\ F(x)}{\pi}\ \frac{(1 - \cos\Phi)^2}{\left[(y - x)^2 + 2\,\delta^2\ (1 - \cos\Phi)\right]^2}$$

The total flux incident at (y, Φ_y) due to radiation by the walls is obtained by integrating over the total surface area of the duct.

$$G(y) = \frac{\delta^2}{\pi} \int_0^{\ell} F(x) \int_0^{2\pi} \frac{(1 - \cos \Phi)^2 \, d\Phi \, dx}{\left[(y - x)^2 + 2\,\delta^2 (1 - \cos \Phi)\right]^2} .$$

In addition to this there will be a flux due to direct radiation from the point source at A

$$\therefore G(y) = \frac{N_o \, \delta}{2\,\pi\,(\delta^2 + y^2)^{3/2}} + \frac{\delta^3}{\pi} \int_0^{\ell} F(x) \int_0^{2\pi} \frac{(1 - \cos \Phi)^2 \, d\Phi \, dx}{\left[(y - x)^2 + 2\,\delta^2 (1 - \cos \Phi)\right]^2} .$$

Finally, the flux emerging at (y, Φ_y) is related to the incident flux by the albedo.

$$F(y) = \alpha' \, G(y)$$

$$\therefore F(y) = \frac{N_o \, \alpha' \, \delta}{2\pi\,(\delta^2 + y^2)^{3/2}} + \frac{\alpha' \, \delta^3}{\pi} \int_0^{\ell} F(x) \int_0^{2\pi} \frac{(1 - \cos \Phi)^2 \, d\Phi \, dx}{\left[(y - x)^2 + 2\,\delta^2 (1 - \cos \Phi)\right]^2} . \tag{10}$$

This is an integral equation in the unknown function $F(x)$.

The integral in the azimuthal variable is easily done.

$$\int_0^{2\pi} \frac{(1 - \cos \Phi)^2 \, d\Phi}{\left[(y - x)^2 + 2\,\delta^2 (1 - \cos \Phi)\right]^2} = -\frac{1}{4} \frac{d^2}{d(\delta^2)^2} \int_0^{2\pi} \ell n \left[(y - x)^2 + \right.$$

$$\left. + 2\,\delta^2 (1 - \cos \Phi)\right] d\Phi$$

$$= -\frac{1}{4} \frac{d}{d(\delta^2)^2} \left\{ 2\pi \, \ell n \, \frac{(y - x)^2 + 2\,\delta^2 + (y - x)\sqrt{(y - x)^2 + 4\,\delta^2}}{2} \right\}$$

$$= -\frac{\pi}{2} \frac{d}{d(\delta^2)} \left\{ \frac{2\left[(y - x)^2 + 4\,\delta^2\right] + 2(y - x)}{\sqrt{(y - x)^2 + 4\,\delta^2}\left[(y - x)^2 + 2\,\delta^2 + (y - x)\sqrt{(y - x)^2 + 4\,\delta^2}\right]} \right\} .$$

The quantity in the brackets can be rewritten by rationalizing the denominator as

$$\frac{\left[2(y - x) + \sqrt{(y - x)^2 + 4\,\delta^2}\right]\left[(y - x)^2 + 2\,\delta^2 - (y - x)\sqrt{(y - x)^2 + 4\,\delta^2}\right]}{4\,\delta^4\sqrt{(y - x)^2 + 4\,\delta^2}}$$

$$= \frac{1}{\delta^2} - \frac{y - x}{\delta^2\sqrt{(y - x)^2 + 4\,\delta^2}}$$

the integral becomes

$$\frac{\pi}{2\,\delta^4}\left\{1 - \frac{|y - x|\left[(y - x)^2 + 6\,\delta^2\right]}{\left[(y - x)^2 + 4\,\delta^2\right]^{3/2}}\right\} \equiv \frac{\pi}{2\,\delta^4}\;K(\,|y - x|\,)\quad . \tag{11}$$

The absolute value sign is required since $(y - x)$ was obtained from under a square root sign. Using this result, the integral equation (10) becomes

$$F(y) = \frac{N_0\,\alpha'\,\delta}{2\,\pi\,(\delta^2 + y^2)^{3/2}} + \frac{\alpha'}{2\,\delta}\int_0^{\ell} F(x)\;K(\,|y - x|\,)\,dx\;. \tag{12}$$

An exact solution of this equation seems quite difficult to obtain. However, a simple approximation yields a reasonable result. Consider the function $K\,(\,|y - x|\,)$. At $x = y$ this function is equal to unity and drops off very rapidly from this value as $|y - x|$ increases. The function is already down to 0.1 at $|y - x| \cong 2\,\delta$ and varies as $\frac{6\,\delta^4}{|x - y|^4}$ for $|x - y| >> \delta$. This sharp peaking makes the kernel act almost as a delta function. If the function $F(x)$ is assumed to be smoothly varying the integral equation becomes

$$F(y) \cong \frac{N_0\,\alpha'\,\delta}{2\,\pi\,(\delta^2 + y^2)^{3/2}} + \frac{\alpha'\,F(y)}{2\,\delta}\int_0^{\ell} K(\,|x - y|\,)\,dx$$

Writing

$$I(y) = \int_0^{\ell} K(\,|x - y|\,)\,dx$$

$$F(y) = \frac{N_o \alpha' \delta}{2 \pi (\delta^2 + y^2)^{3/2}} \cdot \frac{1}{1 - \frac{\alpha' I(y)}{2\delta}} .$$

The quantity I(y) is easily evaluated

$$I(y) = \int_o^{\ell} K(|x - y|)\, dx = \int_o^{\ell} \left\{ 1 - \frac{|y - x|}{[(y - x)^2 + 4 \delta^2]^{1/2}} + \right.$$

$$\left. - \frac{2 \delta^2 |y - x|}{[(y - x)^2 + 4 \delta^2]^{3/2}} \right\} dx = \ell + 2 \delta - \frac{y^2 + 2 \delta^2}{\sqrt{y^2 + 4 \delta^2}} - \frac{(\ell - y)^2 + 2 \delta^2}{\sqrt{(\ell - y)^2 + 4 \delta^2}} .$$

Except near the edges of the duct, the conditions $y \gg \delta$; $(\ell - y) \gg \delta$ are satisfied. Then $I(y) \cong 2 \delta$. At the edges the function is

$$I(o) \cong \delta \qquad I(\ell) \cong \delta .$$

Thus, except for an edge effect which reduces the function somewhat, one can write

$$I(y) \cong 2 \delta$$

$$F(y) \cong \frac{N_o \delta}{2 \pi (\delta^2 + y^2)^{3/2}} \cdot \frac{\alpha'}{1 - \alpha'} \tag{13}$$

The flux at C due to wall scattering is now found by integrating over the flux emitted by the walls, recalling that this has a cosine distribution.

$$F_c = \int_o^{\ell} \frac{F(y)}{\pi} \frac{\delta}{[(\ell - y)^2 + \delta^2]^{3/2}} 2 \pi \delta\, dy$$

$$= \frac{N_o \delta^3 (\alpha'/1 - \alpha')}{\pi} \int_o^{\ell} \frac{dy}{(\delta^2 + y^2)^{3/2} [(\ell - y)^2 + \delta^2]^{3/2}} .$$

Comparing this with the previous equation for single scattering with cosine reradiation (in Section II A) it is seen that the effect of multiple scattering is simply to replace α' by $\alpha'/1 - \alpha'$.

A similar procedure can be followed for the case of isotropic reradiation. The integral equation for F is now

$$F(y) = \frac{\alpha' \delta^2}{2\pi} \int_0^{\ell} F(x) \int_0^{2\pi} \frac{(1 - \cos \Phi)\, d\Phi\, dx}{\left[(y - x)^2 + 2\delta^2 (1 - \cos \Phi)\right]^{3/2}} + \frac{N_0 \alpha' \delta}{2\pi (y^2 + \delta^2)^{3/2}} \tag{14}$$

which by the sharp peaking of the kernel at $x = y$ gives

$$F(y) \cong \frac{\alpha' \delta^2 F(y)}{2\pi} \int_0^{\ell} \int_0^{2\pi} \frac{(1 - \cos \Phi)\, d\Phi\, dx}{\left[(y - x)^2 + 2\delta^2 (1 - \cos \Phi)\right]^{3/2}} + \frac{N_0 \alpha' \delta}{2\pi (y^2 + \delta^2)^{3/2}} .$$

Interchanging the limits of integration

$$I(y) \equiv \int_0^{2\pi} (1 - \cos \Phi) \int_0^{\ell} \frac{dx\, d\Phi}{\left[(y - x)^2 + 2\delta^2 (1 - \cos \Phi)\right]^{3/2}}$$

$$= \frac{1}{2\delta^2} \int_0^{2\pi} \left\{ \frac{\ell - y}{\sqrt{(\ell - y)^2 + 2\delta^2 (1 - \cos \Phi)}} + \frac{y}{\sqrt{y^2 + 2\delta^2 (1 - \cos \Phi)}} \right\} d\Phi .$$

For $\ell - y \gg \delta$; $y \gg \delta$ this becomes

$$I(y) \cong \frac{2\pi}{\delta^2}$$

and near the edges

$$I(o) \cong \frac{\pi}{\delta^2} \qquad I(\ell) \cong \frac{\pi}{\delta^2} \quad .$$

Thus, to the same approximation as in the case of cosine reradiation, there results

$$F(y) \doteq \frac{N_o\ \delta}{2\ \pi\ (y^2 + \delta^2)^{3/2}} \cdot \frac{\alpha'}{1 - \alpha'} \quad . \tag{15}$$

Once again the flux at C is immediately seen to be identical to that predicted by single scattering except for the replacement of α' by $\alpha'/1 - \alpha'$.

For the general case of isotropic and cosine reradiation by the walls, including multiple reflection,

$$F_c = \frac{N_o}{2\ \pi \ell^2}\left(1 + A\ \frac{\alpha'}{1 - \alpha'} + \frac{4\ B\ \delta\ \alpha'}{(1 - \alpha')}\right) . \tag{16}$$

It has been found that the albedoes for water and concrete are of the order of 0.1. This result, coupled with the fact that A and B are less than or equal to unity allows one to neglect all but the first term to a reasonable approximation. Hence, the flux at the end of a long thin duct is due to just the uncollided neutrons to within a few percent.

III. ATTENUATION DUE TO A SINGLE BEND

Consider two equally long circular ducts of radius δ joined with a bend of angle θ. See Figure 3 on following page. The results of Section II show that the majority of neutrons arriving in the region of point B are uncollided neutrons entering the region of point B is then

$$D_B = n_o\ (\pi\ \delta^2)^2\ \frac{1}{2\ \pi \ell^2} \tag{17}$$

where ℓ is the length of either straight section. This dose of neutrons is completely absorbed in the walls of region B and as a result a reradiated flux

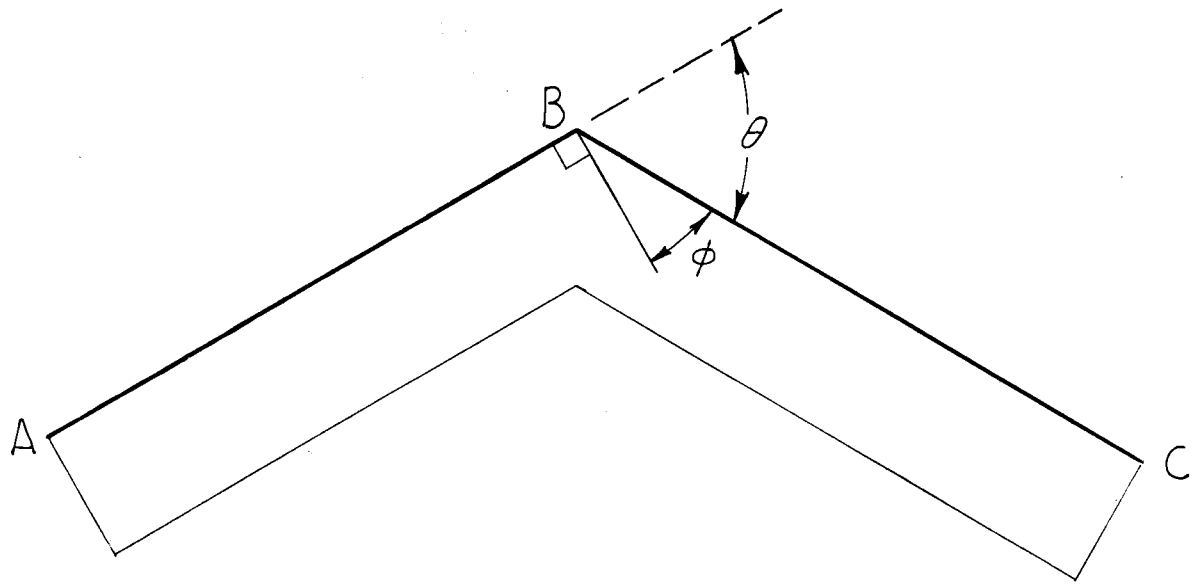

Figure 3

leaves the walls with a source strength proportional to the albedo of the medium. The exact effect of the complicated scatterings at the corner is unknown. However, it will be assumed that the reradiated flux is emitted uniformly from the walls of region B with an angular distribution which is equal to $\left(\frac{\alpha' D_B}{A_t}\right) \cdot \frac{A + 2 B \cos \theta}{2 \pi}$. The effective wall region is taken to be of area A_t. By conservation of neutrons then

$$\int \frac{\alpha' D_B}{A_t} \frac{A + 2 B \cos \theta}{2 \pi} d\Omega = \frac{\alpha' D_B}{A_t}$$

where the integral is over all solid angles $d\Omega$.

$$\therefore \frac{\alpha' D_B}{A_t} (A + B) = \frac{\alpha' D_B}{A_t}$$

or

$$A + B = 1 \, . \tag{18}$$

The neutrons arriving at C are once again those that have come on an uncollided flight from the virtual sources in region B. This dose is

$$D_c = \int_\sigma \left(\frac{\alpha' D_B}{A_t}\right) \frac{A + 2 B \cos \Phi}{2 \pi} \frac{\pi \delta^2}{\ell^2} d\sigma ,$$

where Φ is the angle of emission relative to the normal, see Fig. 3, $d\sigma$ is an element of wall area, and the integral is extended over the region of the wall visible from point C. Denoting this area by A_v

$$D_c = \alpha' (A + 2 B \sin \theta) \frac{\delta^2}{2 \ell^2} \frac{A_v}{A_t} \cdot D_B$$

since the angle Φ is essentially a constant and $\Phi + \theta = \pi/2$. An approximate value of A_v is easily obtained. From the diagram it is evident that

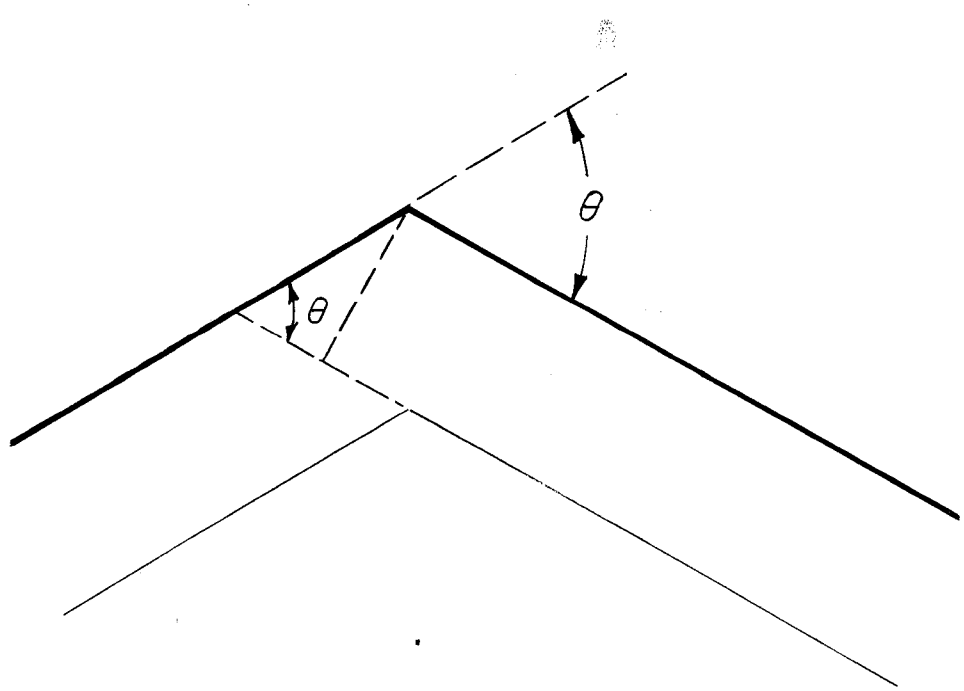

Figure 4

$$A_v \cong \frac{\pi \delta^2}{\sin \theta} \tag{19}$$

$$D_c = \frac{\alpha'}{\sin \theta} (A + 2 B \sin \theta) \frac{\delta^2}{2\ell^2} \left(\frac{\pi \delta^2}{A_t}\right) D_B .$$

Substituting the value of D_B obtained in Eq. (17) there results

$$D_c = n_o \frac{\alpha'}{\sin \theta} \left(\frac{\delta^2}{2 \quad 2}\right)^2 \left(\frac{\pi \delta^2}{A_t}\right) (\pi \delta^2) (A + 2 B \sin \theta)$$

Recalling that A_t is an area essentially independent of the angle of bend, one can write

$$A_t = K \pi \delta^2 \tag{20}$$

where K is an undetermined constant.

$$\therefore D_c = n_o \left(\frac{\alpha'}{K}\right) (\pi \delta^2) \left(\frac{\delta^2}{2\ell^2}\right)^2 \frac{A + 2 B \sin \theta}{\sin \theta}$$

If a general constant α is defined as $\alpha = \alpha'/K$ the dose at C becomes

$$D_c = n_o (\pi \delta^2) \left(\frac{\delta^2}{2\ell^2}\right) \left(\frac{\alpha \delta^2}{2\ell^2}\right) \left(\frac{A + 2 B \sin \theta}{\sin \theta}\right)$$

IV. ATTENUATION DUE TO MANY BENDS

Eq. (21) may be easily generalized to cover the general case of n + 1 straight sections each of length ℓ_i (i = 1, 2, . . ., n + 1) and joined at angles given by $\theta_{i,\ i+1}$ where the subscripts denote the angle between the appropriate straight sections. The result is

$$D = n_o \; (\pi \, \delta^2) \left(\frac{\delta^2}{2 \ell_1^2}\right) \left[\frac{\alpha \, \delta^2 \, (A + 2 \, B \sin \theta_{1,\,2})}{2 \ell_1^2 \sin \theta_{1,\,2}}\right] \cdots\cdots$$

$$\cdots\cdots \left[\frac{\alpha \, \delta^2 \, (A + 2 \, B \sin \theta_{n,\,n+1})}{2 \ell_{n+1}^2 \sin \theta_{n,\,n+1}}\right] . \qquad (22)$$

In the special case of equal lengths of straight sections with equal bends, this becomes

$$D = n_o \; (\pi \, \delta^2) \left(\frac{\delta^2}{2 \ell^2}\right) \left(\frac{\alpha \, \delta^2}{2 \ell^2 \sin \theta}\right)^n (A + 2 \, B \sin \theta)^n \; . \qquad (23)$$

Using Eq. (18) this can be written

$$D = n_o \; (\pi \, \delta^2) \left(\frac{\delta^2}{2 \ell^2}\right) \left(\frac{\alpha \, \delta^2}{2 \ell^2 \sin \theta}\right)^n \left[1 - B \, (1 - 2 \sin \theta)\right]^n \; . \qquad (24)$$

It should be noted that Eq. (24) is not valid for angles that are so small that neutrons can go directly from A to C. In addition, the formula breaks down at angles such that a very large section of the wall ($> A_t$) can be seen from point C. In this region of θ, the predicted dose should be an overestimate of the measured effect. The best results should be obtained at large angles.

Rewriting this equation in terms of the diameter a, there results

$$D = n_o \left(\frac{\pi \, a^2}{4}\right) \left(\frac{a^2}{8 \ell^2}\right) \left(\frac{\alpha \, a^2}{8 \ell^2 \sin \theta}\right)^n \left[1 - B \, (1 - 2 \sin \theta)\right]^n \; .$$

In the remaining experimental sections it is assumed that there is no cosine reradiation by the walls; i.e: $B = 0$. A reasonable fit to the experiments can then be obtained. However, the present experiments are not sensitive enough to allow one to conclude that B is strictly zero or even very small. Future experiments using a dosimeter, should be able to decide on this point.

ACKNOWLEDGEMENT

It is a pleasure to thank Mr. E. P. Blizard for many helpful discussions and suggestions.