[redacted]

JUL 18 1952
TRAINING SCHOOL LIBRARY

ORNL-1312
Physics-Fission
8a

MARTIN MARIETTA ENERGY SYSTEMS LIBRARIES
3 4456 0353040 9

FISSION CROSS SECTIONS OF URANIUM-234 AND URANIUM-236 FOR INCIDENT NEUTRON ENERGIES UP TO 4 Mev

CENTRAL RESEARCH LIBRARY
DOCUMENT COLLECTION
LIBRARY LOAN COPY
DO NOT TRANSFER TO ANOTHER PERSON
If you wish someone else to see this document, send in name with document and the library will arrange a loan.

OAK RIDGE NATIONAL LABORATORY
OPERATED BY
CARBIDE AND CARBON CHEMICALS COMPANY
A DIVISION OF UNION CARBIDE AND CARBON CORPORATION
UCC
POST OFFICE BOX P
OAK RIDGE, TENNESSEE

[redacted]

[redacted]

[redacted]

DECLASSIFIED

ORNL-1312

This document consists of 16 pages.

Copy 8 of 154. Series A.

CLASSIFICATION CHANGED TO:

BY AUTHORITY OF: TID-1148

BY: R. Morrison 7/26/57

Contract No. W-7405, eng-26

PHYSICS DIVISION

FISSION CROSS SECTIONS OF URANIUM-234 AND URANIUM-236 FOR INCIDENT NEUTRON ENERGIES UP TO 4 Mev

R. W. Lamphere

DATE ISSUED

JUL 15 1952

OAK RIDGE NATIONAL LABORATORY
operated by
CARBIDE AND CARBON CHEMICALS COMPANY
A Division of Union Carbide and Carbon Corporation
Post Office Box P
Oak Ridge, Tennessee

[redacted]

[redacted]

MARTIN MARIETTA ENERGY SYSTEMS LIBRARIES
3 4456 0353040 9

[redacted]

ORNL-1312
Physics-Fission

INTERNAL DISTRIBUTION

1. G. T. Felbeck (C&CCC)
2-3. Chemistry Library
4. Physics Library
5. Biology Library
6. Health Physics Library
7. Metallurgy Library
8-9. Training School Library
10. Reactor Experimental Engineering Library
11-14. Central Files
15. C. E. Center
16. C. E. Larson
17. W. B. Humes (K-25)
18. L. B. Emlet (Y-12)
19. A. M. Weinberg
20. E. H. Taylor
21. E. D. Shipley
22. A. H. Snell
23. F. C. VonderLage
24. R. C. Briant
25. J. A. Swartout
26. S. C. Lind
27. F. L. Steahly
28. A. Hollaender
29. M. T. Kelley
30. G. H. Clewett
31. K. Z. Morgan
32. J. S. Felton
33. A. S. Householder
34. C. S. Harrill
35. C. E. Winters
36. D. S. Billington
37. D. W. Cardwell
38. E. M. King
39. E. O. Wollan
40. A. J. Miller
41. L. D. Roberts
42. R. N. Lyon
43. W. C. Koehler
44. W. K. Ergen
45. E. P. Blizard
46. M. E. Rose
47. D. D. Cowen
48. P. M. Reyling
49. J. K. Bair
50. F. P. Green
51. C. H. Johnson
52. J. D. Kington
53. H. B. Willard
54. R. Hibbs (Y-12)
55-60. R. W. Lamphere
61. Central Files (O.P.)

EXTERNAL DISTRIBUTION

62-69. Argonne National Laboratory
70. Armed Forces Special Weapons Project (Sandia)
71. Armed Forces Special Weapons Project (Washington)
72-77. Atomic Energy Commission, Washington
78-80. Brookhaven National Laboratory

[redacted]

[redacted]

[redacted]

81. Bureau of Ships
82-83. Carbide and Carbon Chemicals Company (K-25 Plant)
84-[illegible] Carbide and Carbon Chemicals Company (Y-12 Area)
86. Chicago Patent Group
87. Chief of Naval Research
88. Columbia University (Havens)
89-93. DuPont Company
94-95. General Electric Company (ANPP)
96-99. General Electric Company, Richland
100. Hanford Operations Office
101-102. Idaho Operations Office
103. Iowa State College
104-107. Knolls Atomic Power Laboratory
108-110. Los Alamos [illegible]
111-113. Mound Laboratory
114. National Advisory Committee for Aeronautics
115. Naval Research Laboratory
116-117. New York Operations Office
118-120. North American Aviation, Inc.
121. Nuclear Development Associates (NDA)
122. Patent Branch, Washington
123. Savannah River Operations Office (Wilmington)
124. USAF - Headquarters
125. U. S. Naval Radiological Defense Laboratory
126. UCLA Medical Research Laboratory (Warren)
127-129. University of California Radiation Laboratory
130-131. University of Rochester
132-135. Westinghouse Electric Corporation
136-139. Wright Air Development Center
140-154. Technical Information Service, Oak Ridge

[redacted]

[redacted]

FISSION CROSS SECTIONS OF URANIUM-234 AND URANIUM-236 FOR INCIDENT NEUTRON ENERGIES UP TO 4 Mev

R. W. Lamphere

The shapes of the fission cross-section curves for isotopes (24) and (26) relative to (25) have been determined to 2½% statistical error; points were taken about 50 kv apart. A tritium gas target, which gave an rms energy spread that varied from 60 to 100 kv, was used. Unfortunately the ordinate scale factors are in doubt to a probable error of 14% for (24) and 9% for (26), owing to foil uncertainties.

Thresholds were found to be 0.37 and 0.69 Mev for (24) and (26), respectively. The rising portion of the (26) curve is in agreement with that obtained by Nyer,[1] although his point at 2.55 Mev differs markedly from the results reported here. Two minimums were found in each curve; the probability of each was established to the order of a billion to one compared to the probability of a smooth curve. Since these minimums occur at different neutron energies for the two isotopes, it is believed that they are actually minimums in (24) and (26), rather than maximums in (25). The results are shown in Figs. 1 and 2, and the data are tabulated in Tables 1 and 2. These data are expressed as ratios to (25), since the fission cross section of (25) vs. energy is not accurately known as yet, although B. Diven of Los Alamos is now engaged in determining σ_f (25) to good accuracy. His preliminary results[2] show marked differences from the early work of Hall, Koontz, and Rossi.[3]

[1] W. Nyer, *The Neutron Induced Fission Cross Section of U^{236} as a Function of Energy*, LA-1258, May 26, 1951.

[2] Private communication.

[3] *Absolute Values of the Fission Cross Sections of 25 and 28 from 0.28 to 2.50 Mev*, LA-128, August 23, 1944.

PROCEDURE

Figure 3 shows the comparison-type fission chamber that was used. It was covered with a cadmium shield 1/32 in. thick and was placed in front of the gas target so that the foils subtended a 15 deg half-angle. Argon plus 3% CO_2 at a pressure of 2 atm was passed through the chamber at a rate of about 0.1 cu ft/hr from a gas cylinder. No purification was required.

The central plate, which holds the two foils back to back, was kept at -300 v by means of a Minimax battery. Electrons were collected by the end plates, and the pulses picked up from each plate were fed through two identical channels to recorders. Each preamplifier used a triode-connected 6AK5 input tube, a clipping circuit after the third stage with an RC constant of 0.38 μsec, and a cathode-follower output that fed positive pulses over a 40-ft doubly shielded cable to an A-1 amplifier containing a pulse-height discriminator circuit. The preamplifier gain was about 140, and the A-1 operated at a gain of about 216, which gave an overall gain of 30,200. All stages were gain-stabilized by feedback. A calibrated pulse generator instead of the Minimax was used for switching so that the gains of each channel could be observed periodically during an experiment.

To promote economical use of the Van de Graaff, a method using relatively thick foils was employed, whereby the fission counting rate was increased about 3.3 times; this reduced by that factor the amount of generator time required. All foils were composed of uranium plated on 2-mil platinum backing to form a 1-in. dia circle. Two foils were plated for each isotope;

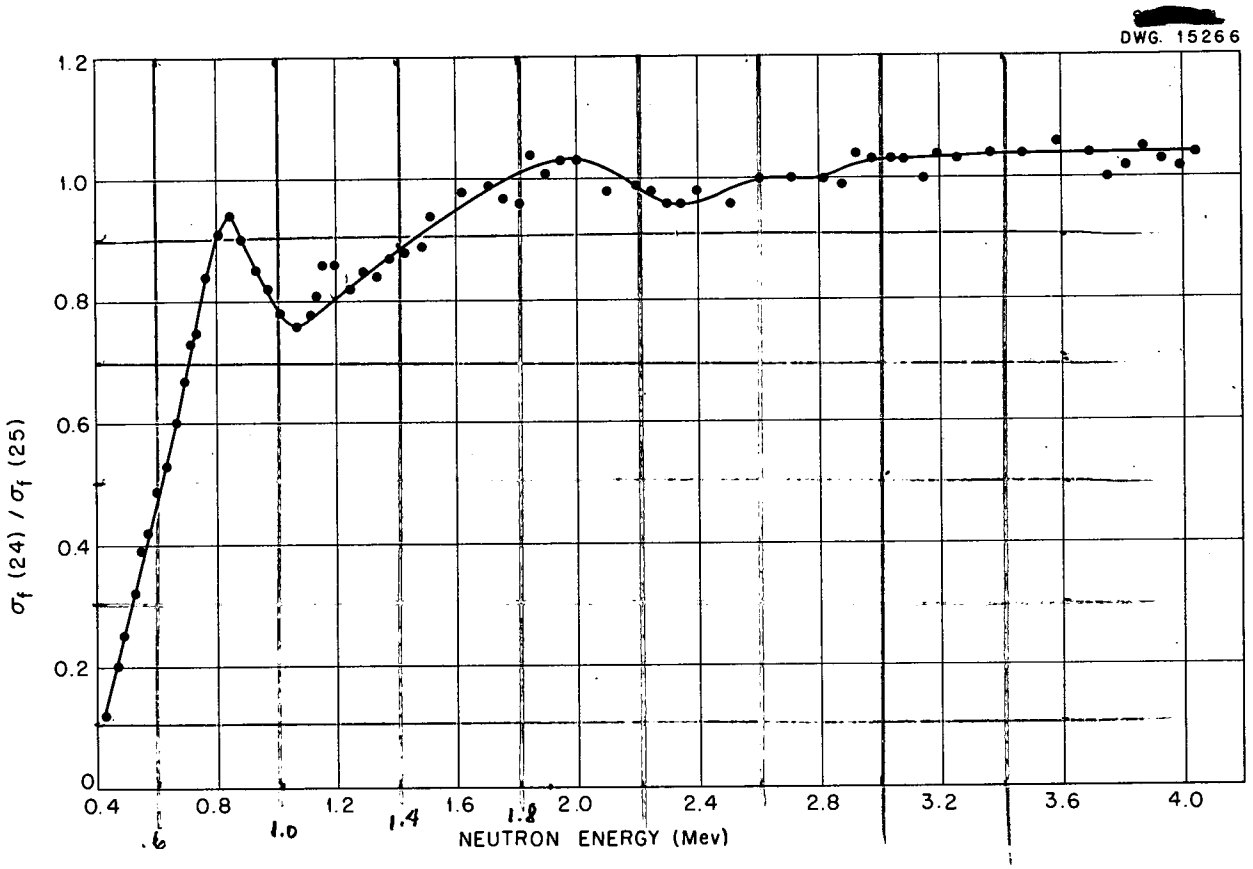

Fig. 1. Fission Cross Section of U^{234} Relative to U^{235}.

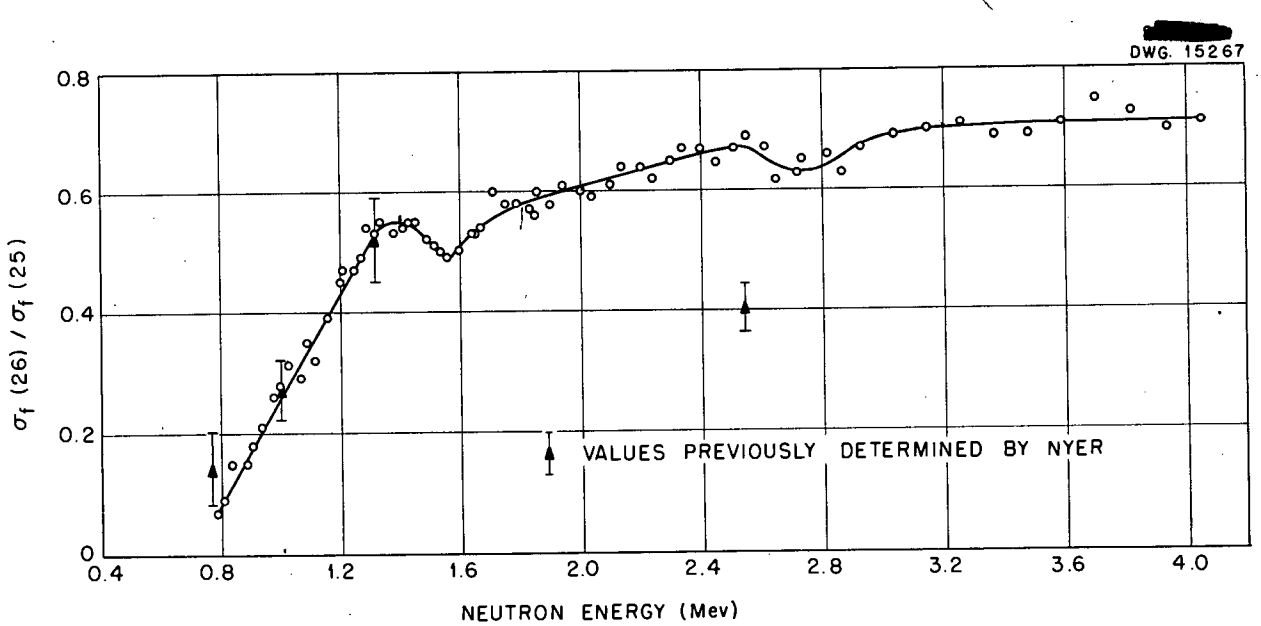

Fig. 2. Fission Cross Section of U^{236} Relative to U^{235}.

one thin foil containing about 1 mg of uranium, and one thick foil containing about 4 mg of uranium. The quantity on the thin foil should be known as accurately as possible, but this is not necessary for the thick one. Two foils of the same isotopic content, one thick and one thin, were placed in the fission chamber back to back, and exposed to neutrons from a polonium-beryllium source for several hours. Thus the ratios of fission yields for two foils were found to 0.2% for pairs of foils of (24), (25), and (26). The thick foils were then used with the Van de Graaff neutrons to find the cross sections of (24) and (26) compared with (25).

All foils were prepared by R. F. Hibbs' group at Y-12 by using source material obtained from B. Harmatz of the isotope separations section at Y-12. The procedure used by Hibbs and his group is capable of high inherent precision. Briefly, it consists of weighing a quantity of the isotope of the order of 10 mg to high accuracy on a microbalance. The sample is dissolved in concentrated

TABLE 1

Counts Taken on (24) Relative to (25)

COUNTS/8		$\bar{E}_n$	$\frac{\sigma_f\ (24)}{\sigma_f\ (25)}$	δE_n	STATISTICS (%)	COUNTS/8		$\bar{E}_n$	$\frac{\sigma_f\ (24)}{\sigma_f\ (25)}$	δE_n	STATISTICS (%)
(24)	(25)					(24)	(25)				
17.2	201	0.29	0	68		433	402	1.85	1.04	67	2.6
10.4	103	0.33	0	68		424	404	1.90	1.01	68	2.5
14.9	102	0.36	0	67		432	403	1.95	1.03	69	2.5
83.3	500	0.38	0.08	67		428	402	2.00	1.03	70	2.5
18.3	101	0.40	0.10	66		407	401	2.10	0.98	72	2.6
20.4	103	0.43	0.12	66		433	422	2.20	0.99	73	2.5
216	803	0.47	0.20	65	2.8	412	403	2.25	0.98	74	2.6
96.6	302	0.49	0.25	65	4.1	909	906	2.30	0.96	75	1.7
155	400	0.53	0.32	64	3.4	419	417	2.35	0.96	76	2.5
230	510	0.55	0.39	64	2.9	412	404	2.40	0.98	77	2.6
200	418	0.57	0.42	63	3.1	887	884	2.51	0.96	79	1.7
224	406	0.60	0.49	63	3.0	426	410	2.61	1.00	81	2.5
1130	1931	0.64	0.53	62	1.4	2664	2561	2.72	1.00	83	1.0
275	422	0.67	0.60	62	2.8	420	404	2.82	1.00	85	2.6
288	401	0.70	0.67	62	2.8	446	434	2.88	0.99	86	2.5
407	522	0.72	0.73	62	2.4	874	807	2.93	1.04	87	1.7
318	400	0.74	0.75	61	2.7	428	402	2.98	1.03	88	2.6
376	424	0.77	0.84	61	2.6	867	809	3.04	1.03	89	1.7
1523	1596	0.81	0.91	61	1.4	450	421	3.09	1.03	90	2.5
2391	2448	0.85	0.94	61	1.0	870	839	3.15	1.00	91	1.7
1150	1225	0.89	0.90	60	1.5	437	406	3.20	1.04	92	2.5
372	416	0.94	0.85	60	2.6	977	920	3.26	1.03	93	1.7
736	848	0.98	0.82	60	1.9	433	404	3.37	1.04	95	2.6
396	479	1.02	0.78	60	2.5	434	404	3.48	1.04	97	2.6
741	919	1.07	0.76	60	1.7	445	404	3.59	1.06	99	2.5
764	925	1.12	0.78	61	1.7	434	402	3.70	1.04	101	2.6
364	426	1.14	0.81	61	2.6	520	503	3.76	1.00	102	2.2
766	851	1.16	0.86	61	1.9	846	805	3.82	1.02	104	1.7
382	425	1.20	0.86	61	2.6	472	434	3.88	1.05	105	2.5
727	842	1.25	0.82	61	1.9	862	811	3.94	1.03	106	1.7
384	428	1.29	0.85	62	2.6	425	401	4.00	1.02	107	2.6
758	856	1.34	0.84	62	1.9	419	389	4.05	1.04	108	2.6
381	419	1.38	0.87	62	2.6						
767	830	1.43	0.88	62	1.9						
390	418	1.49	0.89	63	2.6						
959	977	1.52	0.94	63	1.6						
499	492	1.62	0.98	64	2.4						
417	403	1.71	0.99	65	2.6						
415	412	1.76	0.97	66	2.5						
406	407	1.81	0.96	67	2.6						

TABLE 2

Counts Taken on (26) Relative to (25)

COUNTS/8 (26)	COUNTS/8 (25)	FRONT FOIL*	$\bar{E}_n$	$\frac{\sigma_f(26)}{\sigma_f(25)}$	δE_n	STATISTICS (%)	COUNTS/8 (26)	COUNTS/8 (25)	FRONT FOIL*	$\bar{E}_n$	$\frac{\sigma_f(26)}{\sigma_f(25)}$	δE_n	STATISTICS (%)
4.8	102	4-26	0.64	0.01	62		465	744	4-26	1.79	0.58	67	2.1
12.5	217	1-25	0.66	0.01	62		326	531	4-26	1.83	0.57	67	2.6
6.0	105	4-26	0.66	0.01	62		263	420	1-25	1.85	0.56	67	2.8
6.3	102	4-26	0.67	0.02	62		328	507	4-26	1.86	0.60	68	2.6
5.9	101	4-26	0.69	0.01	62		322	513	4-26	1.90	0.58	68	2.6
20.4	250	1-25	0.70	0.04	62		287	421	1-25	1.94	0.61	69	2.8
7.1	102	4-26	0.70	0.03	62		332	504	4-26	2.00	0.61	70	2.6
7.3	101	4-26	0.72	0.03	61		327	503	4-25	2.00	0.59	70	2.6
7.9	100	4-26	0.74	0.03	61					2.00	0.60	70	1.9
10.6	126	4-26	0.76	0.04	61		287	436	1-25	2.04	0.59	71	2.8
32.0	298	1-25	0.77	0.06	61								
72.7	626	4-26	0.77	0.07	61		341	519	4-26	2.10	0.61	72	2.6
11.5	107	4-26	0.79	0.07	61		300	421	1-25	2.14	0.64	72	2.7
							353	514	4-26	2.20	0.64	73	2.6
80.9	606	4-26	0.81	0.09	61	4.2	305	434	1-25	2.24	0.62	74	2.7
51.0	256	1-25	0.84	0.15	60	5.3	780	1111	4-26	2.30	0.65	75	1.7
101	510	4-26	0.89	0.15	60	3.8	322	431	1-25	2.34	0.67	76	2.7
52.0	222	1-25	0.91	0.18	60	5.4	424	593	4-26	2.40	0.67	77	2.3
131	503	4-26	0.94	0.21	60	3.5	370	503	4-25	2.40	0.67	77	2.4
70.0	226	1-25	0.98	0.26	60	4.8				2.40	0.67	77	1.7
163	527	4-26	0.98	0.26	60	3.2	313	431	1-25	2.45	0.65	78	2.6
			0.98	0.26	60	2.7							
233	699	1-25	1.00	0.28	60	2.7	732	1032	4-26	2.51	0.66	79	1.7
83.0	229	1-25	1.03	0.31	60	4.5	384	507	4-25	2.51	0.68	79	2.4
										2.51	0.67	79	1.4
204	607	1-25	1.07	0.28	60	2.9	332	432	1-25	2.55	0.69	80	2.6
191	551	4-26	1.07	0.30	60	3.0	313	423	1-25	2.61	0.66	81	2.6
			1.07	0.29	60	2.1	362	504	4-26	2.61	0.67	81	2.5
80.0	192	1-25	1.09	0.35	60	4.7	365	503	4-25	2.61	0.66	81	2.5
183	502	4-26	1.12	0.32	60	3.1				2.61	0.66	81	1.7
344	743	1-25	1.16	0.40	61	2.3	625	906	1-25	2.65	0.62	82	1.8
217	507	4-26	1.16	0.38	61	2.9	694	1021	4-26	2.72	0.63	83	1.8
			1.16	0.39	61	1.9	355	510	4-25	2.72	0.63	83	2.5
256	511	4-26	1.20	0.45	61	2.8				2.72	0.63	83	1.4
224	421	1-25	1.21	0.47	61	3.0							
							316	432	1-25	2.74	0.65	83	2.6
267	521	4-26	1.25	0.47	61	2.7	354	502	4-26	2.82	0.66	85	2.5
269	501	4-26	1.27	0.49	61	2.7	372	503	4-25	2.82	0.67	85	2.5
300	511	4-26	1.29	0.54	61	2.7				2.82	0.66	85	1.8
332	555	1-25	1.32	0.53	62	2.6	319	452	1-25	2.87	0.63	86	2.6
331	558	4-26	1.34	0.55	62	2.6	341	451	1-25	2.93	0.68	87	2.5
297	514	4-26	1.38	0.53	62	2.7	716	1008	4-26	2.93	0.66	87	1.7
298	506	4-26	1.41	0.54	62	2.7	401	534	4-25	2.93	0.68	87	2.3
327	530	1-25	1.43	0.55	62	2.6				2.93	0.67	87	1.4
314	530	4-26	1.45	0.55	63	2.6	371	503	4-26	3.04	0.69	89	2.5
302	539	1-25	1.49	0.50	63	2.6							
306	520	4-26	1.49	0.54	63	2.6	323	422	1-25	3.15	0.69	91	2.6
			1.49	0.52	63	1.9	1880	2519	4-26	3.15	0.70	91	1.1
										3.15	0.70	91	1.0
300	538	4-26	1.52	0.51	64	2.6	443	588	4-26	3.26	0.71	93	2.2
261	461	1-25	1.54	0.50	64	2.8	363	487	1-25	3.37	0.67	96	2.5
296	548	4-26	1.56	0.49	64	2.6	413	545	4-26	3.37	0.71	96	2.3
280	510	4-26	1.60	0.50	64	2.7				3.37	0.69	96	1.7
480	830	4-26	1.64	0.53	65	2.0	366	502	4-26	3.48	0.69	98	2.5
254	423	1-25	1.65	0.53	65	2.8							
298	505	4-26	1.67	0.54	65	2.7	329	425	1-25	3.59	0.69	100	2.6
339	525	4-26	1.71	0.60	65	2.6	383	503	4-26	3.59	0.72	100	2.5
289	435	1-25	1.75	0.59	66	2.7				3.59	0.71	100	1.8
315	511	4-26	1.75	0.57	66	2.6	489	617	4-26	3.70	0.75	102	2.2
			1.75	0.58	66	1.9	394	506	4-26	3.82	0.73	104	2.4
							374	503	4-26	3.94	0.70	106	2.5
							88.5	117	4-26	4.05	0.71	107	5.0

*Front foil designation: first figure refers to approximate weight of foil; second figure refers to isotope number.

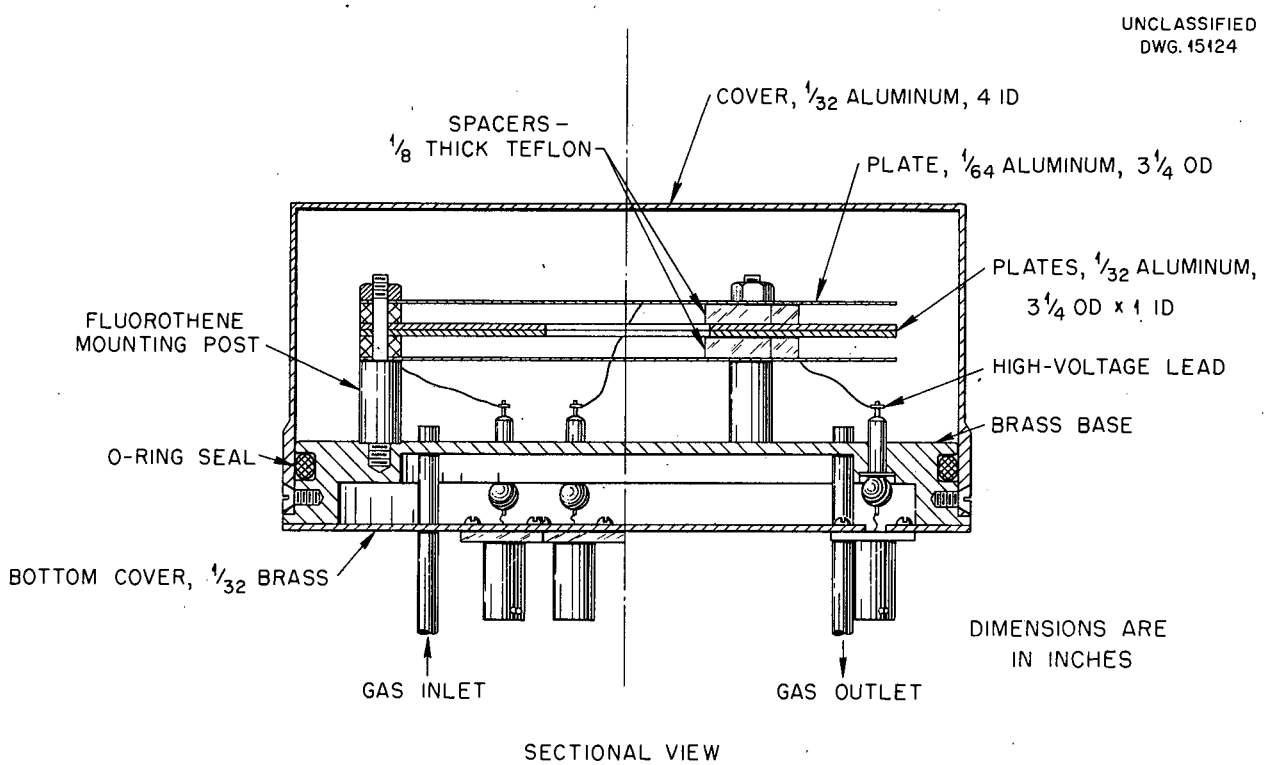

Fig. 5. Fission Chamber

Fig. 3. Fission Chamber.

nitric acid, evaporated to dryness, and then dissolved in water. If a 1-mg plate is desired, a 10% aliquot of this solution is withdrawn and placed in a plating cell, and the uranium is plated onto a platinum foil. This foil is removed from the cell and is replaced with a clean foil. Any residue, usually less than 1% of the 1 mg, plates out practically in its entirety on the fresh, clean foil. This "residue foil" is alpha counted, and the amount found is subtracted from the amount in the aliquot. Foils plated in this way are believed to be accurate to 0.8% by weight.

As a check on the accuracy of the thick-foil technique, the (26) curve was run with the thick foils and also with the thin foils, and the points were found to lie on the same curve. All foils of a given isotope were made from the same batch of source material and hence have the same impurities. The spectroscopic analyses are as follows:

(24)	89.34%	(24)
	7.72%	(25)
	2.89%	(28)
(25)	99.92%	(25)
	0.025%	(24)
	0.05%	(28)
(26)	95.51%	(26)
	4.00%	(25)
	0.43%	(28)
	0.06%	(24)

Figure 4 shows the plateaus obtained with the thick and thin foils exposed to a neutron source. Figure 5 shows the rms spread in neutron energy as a function of average neutron energy.

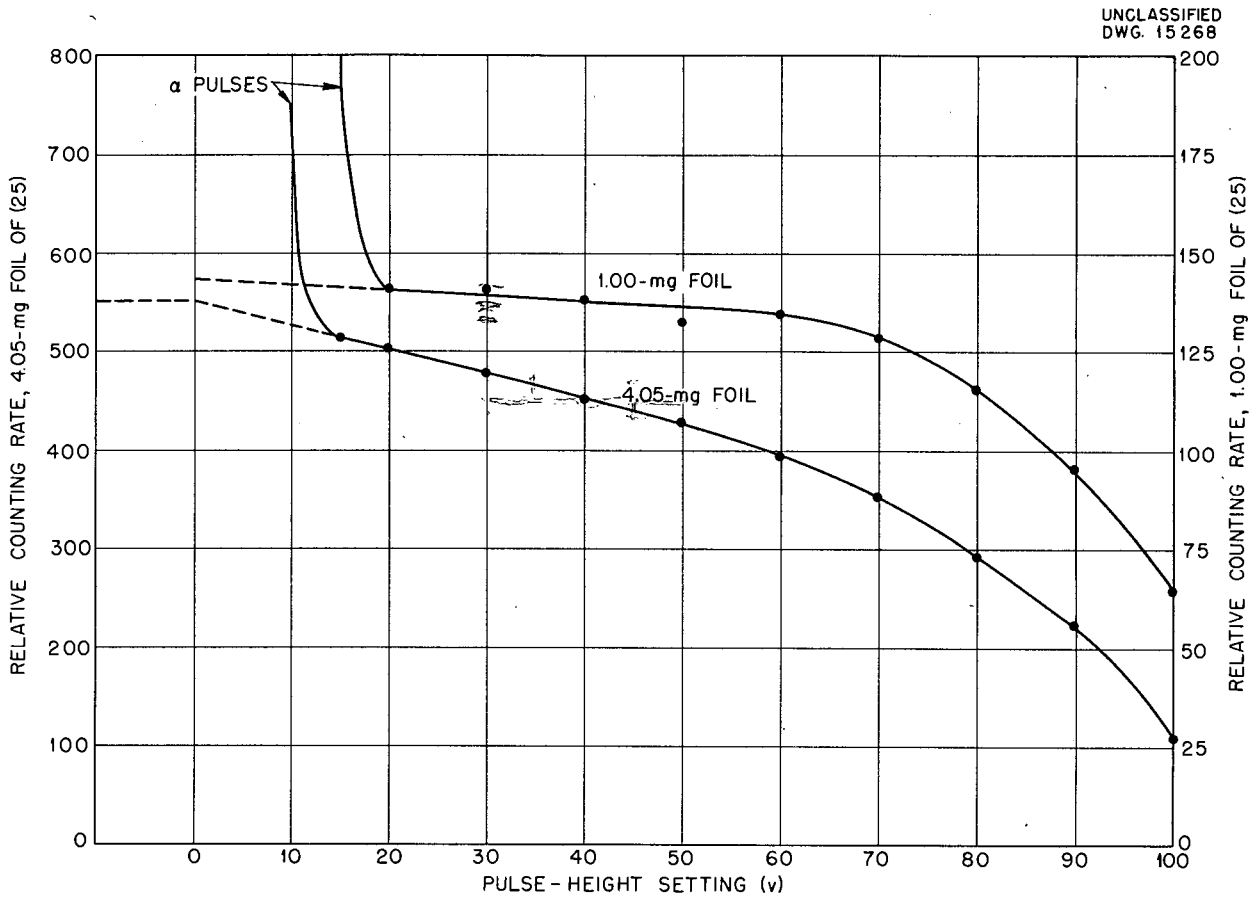

Fig. 4. Plateaus Obtained when Thick and Thin Foils are Exposed to a Neutron Source.

The spread results almost entirely from three causes; variation of energy with angle, target thickness, and proton straggling in the entrance foil. Other factors are negligible. Proton energy was measured from beam-bender magnet current; this relation was established against known thresholds and resonances. Magnet current was always increased during a run and was recycled between runs. The tritium threshold was used as a check point after each recycling and before each run. Beam current averaged about 1 μa; this was about the limit obtainable from the generator.

DISCUSSION OF ERRORS AND CORRECTIONS

Foil Uncertainties

The (25) and (26) foils were alpha counted and found to check within the limits of accuracy imposed by the impurities. This check is believed to be accurate to within 2%. The thin (24) foil was also alpha counted, but because of the high counting loss the results obtained indicated only that they were within reason for the weight given.

After the fission cross sections had been determined by using these

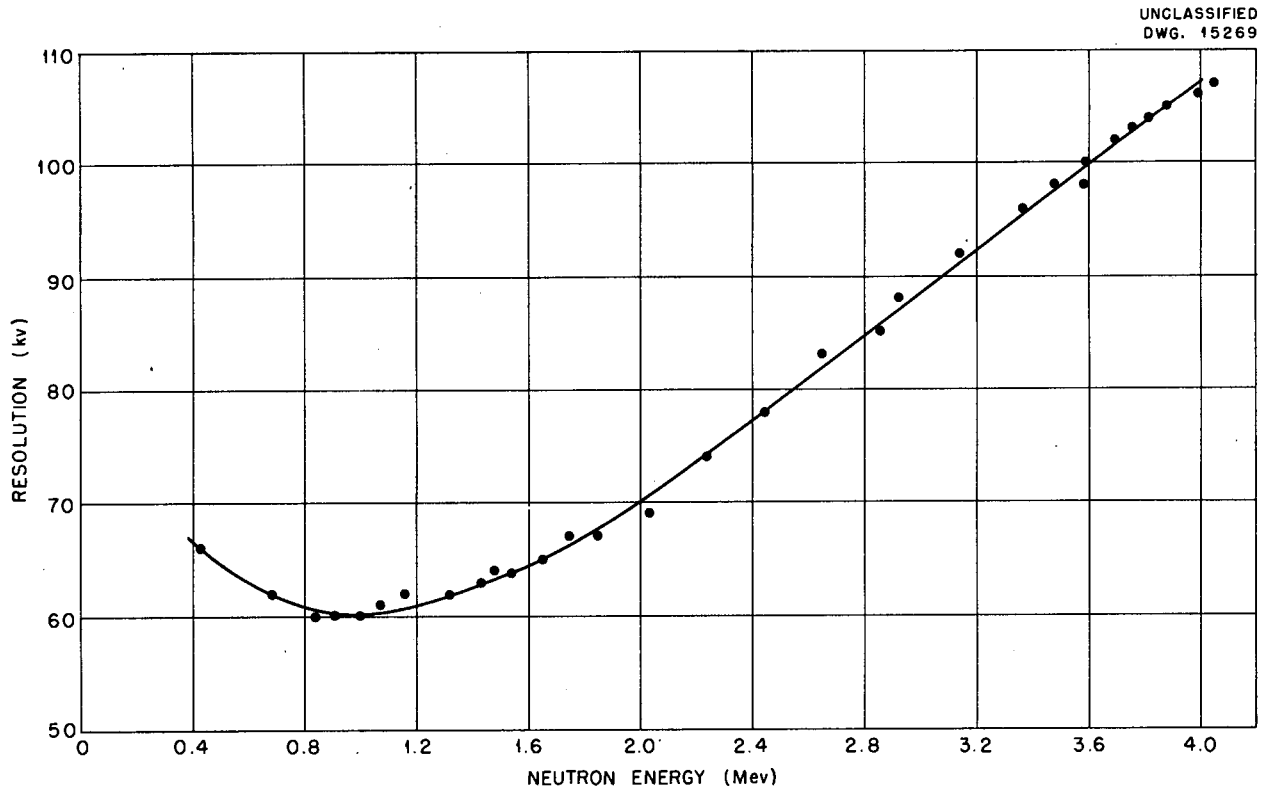

Fig. 5. Energy Spread as a Function of Average Neutron Energy.

foils as a basis, another set of foils secured from Hibbs' group was checked against the first set by simultaneous alpha count in a double alpha chamber. They were also checked by comparison of fission counts by using the fission chamber and the polonium-beryllium source. The results of these checks are summarized as follows:

ISOTOPE	W_2/W_1	α_2/α_1	f_2/f_1
(24)	0.953	1.02	1.07
(25)	1.07	1.14	1.13
(26)	0.974	0.994	1.03

To determine whether the discrepancies between weight ratios and fission yield ratios were due to electronics or chamber asymmetry, the foils were reversed in the chamber, but the same results were obtained. Apparently there is some error, as yet unknown, in the technique of foil preparation. One possibility is that the weights are actually correct, but differences exist in the degree of uniformity to which the foils are plated. Thus a 0.20-mg/cm^2 foil will have 2% self absorption if the coating is uniform. However, if the degree of nonuniformity is such that it could be approximated by assuming 25% of the plate to contain all the material uniformly plated, and 75% of the area to have none, then such a plate would show about 8% self absorption for the fission fragments. If this plate were to be compared with the uniformly plated one, a difference of 6% would be found in the fission yield even though the two plates had the same weight of material on each.

The first set of foils are the ones on which the cross-section curves depend, and at least in the case of (25) and (26) the given weights were in agreement with the alpha counts. Agreement was not so good for the check foils, which probably accounts for the greater part of the discrepancy.

Scattering

A good statistical estimate of the effect of scattered neutrons was made by taking two points for (24) at half angles of 7½ and 15 degrees. A long counter was placed at an angle of 90 deg and at a distance of 1 m from the tritium target during these runs. The pertinent data follow:

$\bar{E}_n$	LONG-COUNTER COUNTS	(24)	(25)	HALF ANGLE
0.85	15,632	1010	1039	7.5
0.85	6,364	1381	1409	15.0
2.72	10,539	1022	1005	7.5
2.72	3,953	1331	1256	15.0

By treating these as a single point, and by assuming that scattered neutrons produce fission only in the (25) foil, a scattering effect of ± 1% is found. Since this effect is small and is not accurately known, the curves have not been corrected for it.

Thick-Foil Equivalent Weights

The thick-foil equivalent weights were found to about 0.2% in terms of the thin-foil weights. The data are listed in the appendix.

Correction for Beam Momentum

The neutron beam is incident normal to the surface of the foil. The fission fragments will therefore pick up some momentum from the incident neutron that causes the fission to take place. The effect of this is to alter the amount of self absorption, which increases the absorption loss for the foil facing the neutron source and decreases it for the foil facing away from the source. The magnitude of this correction for each foil will be about 1% at 4 Mev and will vary as the square root of the energy. This correction is, to first order, independent of foil thickness and of the range of the fragments in the foil. It has been applied to the data in evaluating the cross-section curves; the accuracy of the correction is at least within 10%, so the probable error in cross section from this source is not over 0.15%. An experimental verification of this factor was made for (26) by taking seven points from 2 to 3 Mev with foils "normal" and "reversed" with respect to beam direction (see Table 2, 4-mg foils). The mean spread in cross-section values was found to be 3.4%, and the calculated value is 3.5%, for 2.5 Mev. The correction equations are derived in the appendix.

Effect of Amplifier Gain Changes

The fission-particle plateaus for the thick foils have sufficient slope so that some attention must be paid to the amplifiers to guard against excessive, relative gain changes. The pulse generator served as a monitor, and gain changes were compensated for by adjustment of the pulse-height selector. Relative gain changes were held to 0.2 v on the pulse-height selector dial, and from Fig. 3 this can be shown to alter the count rate by 0.12% for the 4-mg foils. It was easy to hold the relative gains to this degree of precision.

Summary and Acknowledgments

The following is a summary of standard errors applying to the cross-section curves.

Foils:

14% for (24),
9% for (26),
0.2% additional for thick foils.

Scattering (both curves):

1%.

Beam momentum (both curves):

0.15% at 4 Mev, decreasing as energy decreases.

Gain changes (both curves):

0.12%.

Statistics (both curves):

1.5 to 3.0% for most points. These values are listed with the data in Tables 1 and 2.

The shapes of the fission curves have been determined to good accuracy, except for the possibility of the existence of small extrema, 100 kv or less in width, which were not resolved. An investigation of these and other isotopes for small extrema is planned for the fall of 1952, and an attempt will also be made to refine the technique of foil making to a much higher degree of reproducibility.

The writer wishes to thank the following members of the 5-Mev Van de Graaff group for their help in operating and maintaining the generator during the progress of these measurements: J. K. Bair, F. P. Green, C. H. Johnson, J. D. Kington, and H. B. Willard. The author also wishes to extend his thanks to C. H. Johnson for providing the gas target, to J. L. Fowler for his helpful suggestions, and to R. F. Hibbs and his group for preparing the foils.

APPENDIX

1. Beam Correction

Notation:

t_1 = 0.20 mg/cm^2 = actual thickness of the 1-mg foils,

t_2 = 0.80 mg/cm^2 = actual thickness of the 4-mg foils,

t' = effective thickness of foil as a result of pulse-height setting on the A-1 amplifier,

R = 5.0 mg/cm^2 = mean range of fission fragments in foil,

R_b = component of range imparted by beam – component normal to foil,

z = coordinate normal to foil – taken as zero at surface of foil backing and as t at surface of uranium,

W = weight of thick foil,

W' = equivalent thin-foil weight of thick foil as obtained from polonium-beryllium comparison data,

c = fissions occurring in unit thickness of foil,

N_t = total fission processes in foil,

N_{ao} = fissions not recorded owing to absorption – for case of no beam momentum,

N_{co} = fissions that would be counted were it not for beam momentum – corrected count,

N_e = fragments extracted from foil as a result of beam momentum,

N_c = fissions actually counted,

$F = N_e/N_{co}$ (nearly equal to N_e/N_c), then

$$N_{co} = N_c - N_e = N_c[1 - (N_e/N_c)] = N_c(1 - F).$$

Reference for data on self absorption: E. Segrè and C. Wiegand, "Stopping Power of Various Substances for Fission Fragments," *Phys. Rev.*, **70**, 808 (1946).

According to Segrè, the self absorption for the thin foils should be about 2% and for the thick foils about 8%. That is, for a thin (t less than R), uniformly emitting layer, the fractional loss is $t/2R$.

Since fragments must have some energy after leaving the foil in order to be counted, an effective thickness,

t', should be used that can be obtained from the slope of the fission plateau. The effective thickness is 0.60 mg/cm^2 for the thin foil and pulse-height settings of 35 to 45 on the A-1 amplifier. Hence for this work, the loss as a result of foil thickness for the 1-mg foils is 6%.

Since the foils are somewhat non-uniform and R is not the same for all fragments, experimental data were used for evaluating t' and N_{ao}/N_{co} for thick foils:

$$t_2' = 0.10 \frac{N_{ao}}{N_t} = 0.10 \left(1 - \frac{0.94\ W'}{W}\right),$$

where t_2' is for the particular pulse-height setting for which W' is evaluated. The factor, 0.94, may need to be altered somewhat for pulse-height settings outside the range, 35 to 45:

$$F = \frac{N_e}{N_{co}} = \frac{N_e}{N_{ao}} \frac{N_{ao}}{N_{co}} = \left(\frac{N_e}{N_{ao}}\right)_{cal} \left(\frac{\frac{N_{ao}}{N_t}}{1 - \frac{N_{ao}}{N_t}}\right)_{exp} .$$

The last term is obtained from experimental values of W' as shown previously. The first term is calculated as follows: the number of fragments reaching the end of their range in a thickness dz will equal $cz\ dz\ (1/R)$, for z less than R. Hence:

$$N_{ao} = \frac{c}{R} \int_0^t z\ dz = \frac{ct^2}{2R} ,$$

$$N_e = \frac{c}{R} \int_{t-R_b}^t z\ dz = \frac{cR_b}{2R} (2t - R_b) ,$$

therefore

$$\frac{N_e}{N_{ao}} = \frac{R_b}{t} \left(2 - \frac{R_b}{t}\right) .$$

Note that the *calculated* value of N_{ao}/N_{co} is

$$\left(\frac{N_{ao}}{N_{co}}\right)_{cal} = \frac{\frac{t}{2R}}{1 - \frac{t}{2R}} = \frac{t}{2R - t} .$$

This gives a *calculated* F of

$$F_{cal} = \frac{R_b}{t} \left(2 - \frac{R_b}{t}\right) \left(\frac{t}{2R - t}\right)$$

$$= \frac{R_b}{2R - t} \left(2 - \frac{R_b}{t}\right) \simeq \frac{R_b}{2R} = 0.0023 \sqrt{E_n}$$

$$R >> t >> R_b .$$

In this work the calculated ratio of N_e/N_{ao} and the experimental ratio of N_{ao}/N_{co} were used. Thus:

$$F = \frac{2R_b}{t'} \left(1 - \frac{R_b}{2t'}\right) \left(\frac{N_{ao}}{N_{co}}\right)_{exp} ,$$

hence

$$R_b = R \sqrt{\frac{E_n}{E_f} \frac{M_n}{M_f}} = R \sqrt{\frac{E_n}{200} \frac{1}{235}}$$

$$= 0.0046R \sqrt{E_n} = 0.023 \sqrt{E_n} \text{ mg/cm}^2 ,$$

where E_n is neutron beam energy in Mev.

Therefore

$$F = \frac{0.046\sqrt{E_n}}{t'}\left(1 - \frac{0.012\sqrt{E_n}}{t'}\right)\left(\frac{N_{ao}}{N_{co}}\right)_{exp}$$

$$= \frac{0.046\sqrt{E_n}}{t'}\left(1 - \frac{0.012\sqrt{E_n}}{t'}\right)\left(\frac{W}{0.94W'} - 1\right)$$

$$= \frac{0.046\sqrt{E_n}}{10}\,\frac{W}{0.94W'}\left(1 - \frac{0.012\sqrt{E_n}}{t'}\right)$$

$$= 0.0049\,\frac{W}{W'}\sqrt{E_n}\left(1 - \frac{0.012\sqrt{E_n}}{t'}\right),$$

where $t' = 10[1 - (0.94W'/W)]$. Note that for thin foils, $W' \equiv W$.

2. Determination of W' for Thick Foils

(a) Uranium-234

Pulse-height setting = 45 volts

Total counts for thick foil = 122415 × 8

Total counts for thin foil = 36601 × 8

Ratio = 3.34 ± 0.21%

Weight of thin foil = 1.06 mg ± 0.8%

W for thick foil = 3.91 mg

W' for thick foil = 1.06 × 3.34 = 3.54 mg

t' for thick foil = 10(1 −0.94 × 3.54/3.91) = 1.49 mg/cm^2

(b) Uranium-235

Pulse-height setting

	35 volts	45 volts
Thick counts	31585 × 64	24595 × 64
Thin counts	9281 × 64	7494 × 64
Ratio	3.40 ± 0.15%	3.28 ± 0.17%
W (thin)	1.00 mg	
W (thick)	4.05 mg	
W' (thick)	3.40 mg	3.28 mg
t' (thick)	2.10 mg/cm^2	2.48 mg/cm^2

(c) Uranium-236

Pulse-height setting = 35 volts

Thick counts	90626 × 8
Thin counts	26862 × 8
Ratio	3.37 ± 0.25%
W (thin)	1.08 mg
W (thick)	3.99 mg
W' (thick)	3.64 mg
t' (thick)	1.43 mg/cm^2

3. Evaluation of Cross Sections

(a) Uranium-234 Relative to Uranium-235. The pulse-height setting was 45 v for the evaluation of U^{234} relative to U^{235}, and only thick foils were used. The values of W' are used in evaluating the cross-section ratio:

$$\frac{\sigma_f\,(24)}{\sigma_f\,(25)} = 1.038\left[\frac{N_{co}\,(24)}{N_{co}\,(25)} - 0.083 - 0.031\,\frac{\sigma_f\,(28)}{\sigma_f\,(25)}\right].$$

Since the last term is a very small correction, it was evaluated by using the ratio curve of σ_f (28) to σ_f (25).[4] The same foils were used for all the data; the (24) foil was located in the front of the chamber, so the F correction for beam momentum is always positive for the (24) foil and negative for the (25) foil.

(b) Uranium-236 Relative to Uranium-235. The pulse-height setting was 35 v for the evaluation of U^{236} relative to U^{235}, and a comparison was made between two thin foils and also between two thick foils. Foils of the same weight were always used together so that absolute changes in

(4) W. Nyer, *Summary of Fast Fission Cross Sections*, LA-994, December 2, 1949.

[redacted]

gain of the amplifiers (relative gains being the same) would not introduce error. From the data given in the foregoing section, the cross-section ratios are:

for thin foils

$$\frac{\sigma_f\ (26)}{\sigma_f\ (25)} = 0.965 \left[\frac{N_{co}\ (26)}{N_{co}\ (25)} - 0.043 \right],$$

for thick foils

$$\frac{\sigma_f\ (26)}{\sigma_f\ (25)} = 0.976 \left[\frac{N_{co}\ (26)}{N_{co}\ (25)} - 0.043 \right],$$

4. Estimate of Scattering

It is assumed that scattered neutrons give extra counts only in the (25) foil, and a comparison is made of count ratios taken at two different distances between foils and target. For this case the distances chosen corresponded to half angles of 15 and 7½ degrees. The count rate in the (24) foil will not vary exactly as the inverse square of the distance because of small effects such as angular distribution of neutron intensity. The long counter is used to evaluate this relation. The result is:

$$R_{1c} = \frac{1 - D}{\frac{1}{R_1} - \frac{D}{R_2}},$$

$$D = \left[\frac{L}{N_c\ (24)} \right]_{15^\circ} \left[\frac{N_c\ (24)}{L} \right]_{7\frac{1}{2}^\circ},$$

where

R_1 = count ratio, (24) counts divided by (25) counts, at 15 degrees,

R_2 = count ratio at 7½ degrees,

R_{1c} = corrected count ratio for 15 degrees,

L = long-counter counts,

$N_c\ (24)$ = (24) foil fission counts.

The percentage of error as a result of scattering is then:

$$\frac{100(R_{1c} - R_1)}{R_1}.$$

[redacted]

[redacted]