UNCLASSIFIED

ORNL-1376

cy. 1

CENTRAL RESEARCH LIBRARY
DOCUMENT COLLECTION

MARTIN MARIETTA ENERGY SYSTEMS LIBRARIES
3 4456 0353154 1

MASS SPECTROMETER INVESTIGATION OF UF_3

By

L. O. Gilpatrick
Russell Baldock
J. R. Sites

ph. 6-2165

OAK RIDGE NATIONAL LABORATORY
CENTRAL RESEARCH LIBRARY
DOCUMENT COLLECTION
LIBRARY LOAN COPY
DO NOT TRANSFER TO ANOTHER PERSON
If you wish someone else to see this document, send in name with document and the library will arrange a loan.
UCN-7969
(3 3-67)

OAK RIDGE NATIONAL LABORATORY
OPERATED BY
CARBIDE AND CARBON CHEMICALS COMPANY
A DIVISION OF UNION CARBIDE AND CARBON CORPORATION
OAK RIDGE, TENNESSEE

UNCLASSIFIED

Cy. 1

UNCLASSIFIED

Index No. ORNL-1376

Subject Category: Physics

MASS SPECTROMETER INVESTIGATION OF UF_3

L. O. Gilpatrick
Russell Baldock
J. R. Sites

August 29, 1952

MASS SPECTROMETRY LABORATORY
Russell Baldock, Department Head

ISOTOPE RESEARCH AND PRODUCTION DIVISION
C. P. Keim, Director

OAK RIDGE NATIONAL LABORATORY
Operated by
CARBIDE AND CARBON CHEMICALS COMPANY
A Division of Union Carbide and Carbon Corporation
Oak Ridge, Tennessee

Contract No. W-7405-eng-26

UNCLASSIFIED

MARTIN MARIETTA ENERGY SYSTEMS LIBRARIES
3 4456 0353154 1

Index No. ORNL-1376
Physics

Internal Distribution:

1.	C. E. Center
2.	C. E. Larson
3.	L. B. Emlet
4.	A. M. Weinberg
5.	W. B. Humes
6.	E. D. Shipley
7.	C. P. Keim
8-17.	Russell Baldock
18-22.	J. R. Sites
23-27.	L. O. Gilpatrick
28.	C. E. Normand
29.	J. R. McNally, Jr.
30.	Boyd Weaver
31.	George Wells
32.	E. J. Murphy
33-36.	Reports Office, TID

External Distribution:

37-286. Given distribution as shown in TID-4500 under Physics Category.

DISTRIBUTION PAGE TO BE REMOVED IF REPORT IS GIVEN PUBLIC DISTRIBUTION.

Issuing Office
Technical Information Department, Y-12 Plant
Date Issued: OCT 1 8 1952

ABSTRACT

It was found from thermal dissociation studies that UF_3 dissociates at all temperatures from 700°C upward. The rate of dissociation increases steadily with rising temperature to yield UF_4 and uranium metal. No evidence of the sublimation of unaltered UF_3 could be found with temperature in the range of 750° to 1000°C.

MASS SPECTROMETER INVESTIGATION OF UF_3

L. O. Gilpatrick, Russell Baldock, and J. R. Sites

The synthesis of uranium trifluoride (UF_3) is more difficult than the synthesis of uranium trichloride (UCl_3) or tribromide (UBr_3) and as a result has been successfully accomplished only recently as a product of the wartime research on uranium.[1] Two successful methods of synthesis have been used:

$$(1)\quad 3UF_4 + U \underset{}{\overset{950^\circ C}{\rightleftharpoons}} 4UF_3$$

$$(2)\quad a.\quad 2U + 3H_2 \xrightarrow{250^\circ C} 2UH_3 \text{ (Lump U)}$$

$$b.\quad 2UH_3 \xrightarrow[\text{Vac.}]{400^\circ C} 2U + 3H_2 \text{ (Powder U)}$$

$$(3)\quad 2UF_4 + H_2 \underset{\text{Very dry}}{\overset{1000^\circ C}{\rightleftharpoons}} 2UF_3 + 2HF.$$

In equation one the essential reaction is the reduction of uranium tetrafluoride (UF_4), which is stable and readily obtainable, by the use of metallic uranium.[2] Equation two, (a) and (b), shows the formation of uranium hydride and its subsequent decomposition which is used as a means of reducing the uranium particle size to very small dimensions. An alternate method of synthesis used in Great Britain by Spencer Palmer is shown in equation three.[3] His method of hydrogen reduction requires extreme care in freeing all reactants and apparatus from both oxygen and water.

The uranium trifluoride used in this study was prepared by W. C. Whitley of the Georgia Institute of Technology,[4] using the metallic uranium

1. Katz, J. R. and E. Rabinowitch, "Chemistry of Uranium," NNES Vol. VIII, No. 5, McGraw-Hill, 1951, p. 349.
2. Warf, J. C., "UF_3 - A Summary Report," AECD-2523, Iowa State College, March 10, 1949.
3. Palmer, H. J. S., "The Reduction of UF_4 by Hydrogen and the Preparation and Properties of UF_3," BR-422, June, 1944.
4. Materials Chemistry Division, ORNL, Quarterly Progress Report, November 14, 1951, p. 14, Y-827.

reduction method of Chiotti and Raeuchle of Ames Laboratory.[2] The final apparatus which he used is shown in Figure 1. The stoichometric amounts of clean reagent were placed in the system and evacuated to remove water, the hydride formation and decomposition was accomplished next, and finally the system was sealed under vacuum by welding. The stainless steel balls enabled him to get excellent mixing and grinding by a few hours of turning in a ball mill. Heating the sealed vessel for 32 hours at 900°C gave a black to wine red product with the consistency of fine sand. A portion of the best lot of UF_3 was used for the mass spectrographic investigation and was analyzed by X-ray diffraction methods which showed it to be 100 per cent UF_3. Chemical analysis also showed it to be better than 99 per cent pure uranium trifluoride.[5]

Uranium trifluoride has been shown to be isomorphous with the rare earth trifluorides and lanthanum by W. H. Zachariasen.[6] Uranium trifluoride shows no noticeable reaction with the atmosphere nor reactions with glass upon storage, but water slowly oxidizes it to yield tetravalent compounds of uranium. Of major importance however is the fact that reaction number one (page 4) is reversible upon heating to yield uranium tetrafluoride and uranium metal from uranium trifluoride as was observed by Spencer Palmer.

After some preliminary trials in the mass spectrometer a vacuum apparatus was built in which to follow the dissociation of uranium trifluoride (Figure 2). The pure nickel thimble was loaded with 2.4 grams of a UF_3 preparation which was known to be only about 87 per cent uranium trifluoride. The conventional vacuum system was an oil diffusion pump, an ion gauge, and two liquid nitrogen traps which provided a base pressure of from 10^{-5} to 10^{-6} mm of mercury during operation. The temperature was raised to various levels for about 17 hours under vacuum at the end of which time the system was cooled and let down to atmospheric pressure with helium gas before opening the system and determining the weight loss of the thimble. The purpose of the nickel foil hood was to prevent attack on the quartz envelope and to give a check on the amount of UF_4 lost, since if the tube is long enough practically all the UF_4 lost by sublimation will condense on its interior surface where it may be weighed and examined. From 90 to 100 per cent of the losses observed were always accounted for by the gain in weight of the nickel hood. The deposit on the hood proved to be quite pure UF_4. Figure 3 shows a general picture of the results obtained. The two widely scattered points above the curve show the large loss per unit time on the first heating of two different samples.

---

5. Manning, D. L., W. K. Miller, and R. Rowan, "Methods of Determination of UF_3," ORNL-1279, April 25, 1952.
6. Zachariasen, W. H., "The Crystal Structure of PuF_3, NpF_3, UF_3(Pb, Th)F_3, and (Ca, Th)F_3, CH-2526, January 2, 1945.

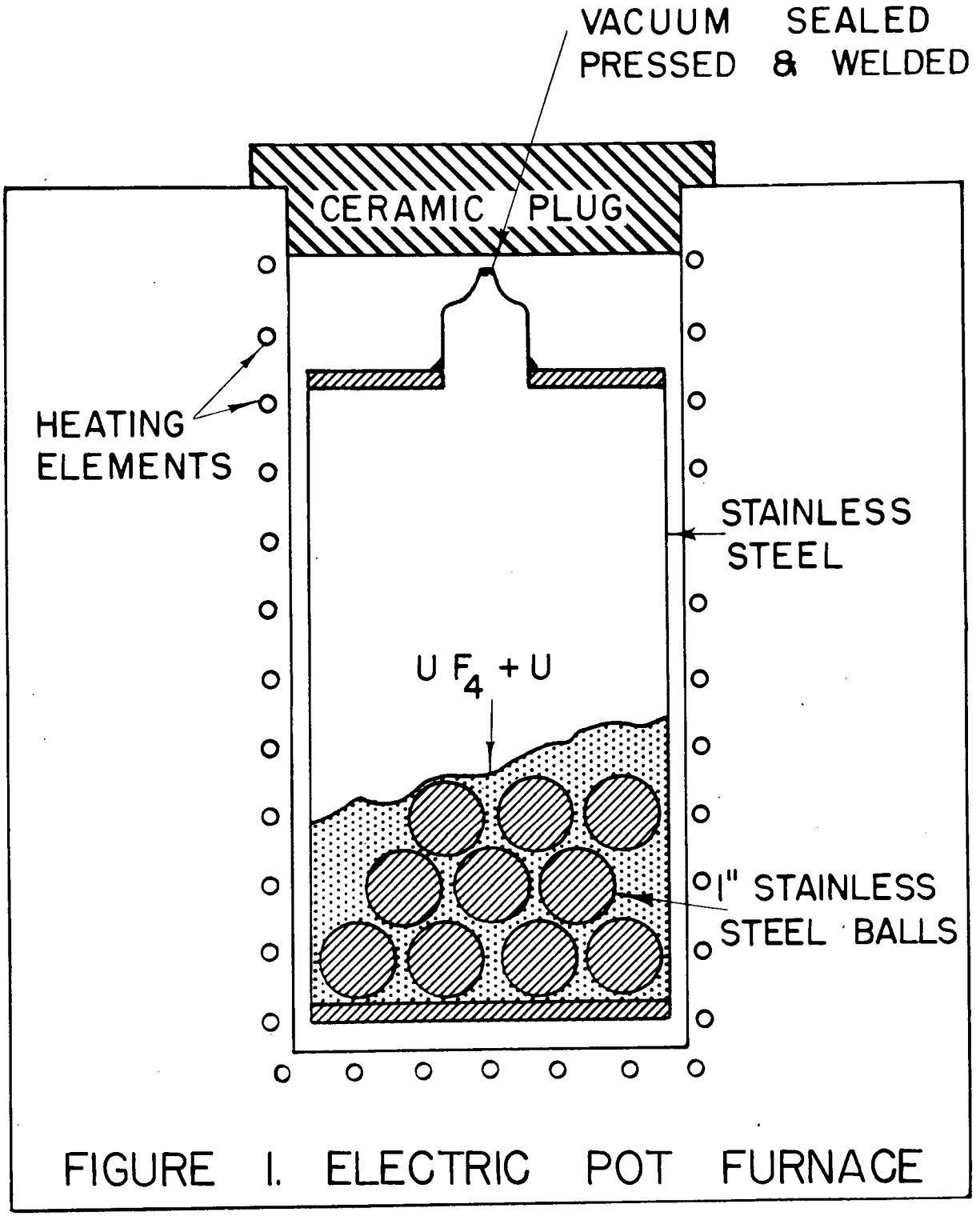

FIGURE 1. ELECTRIC POT FURNACE

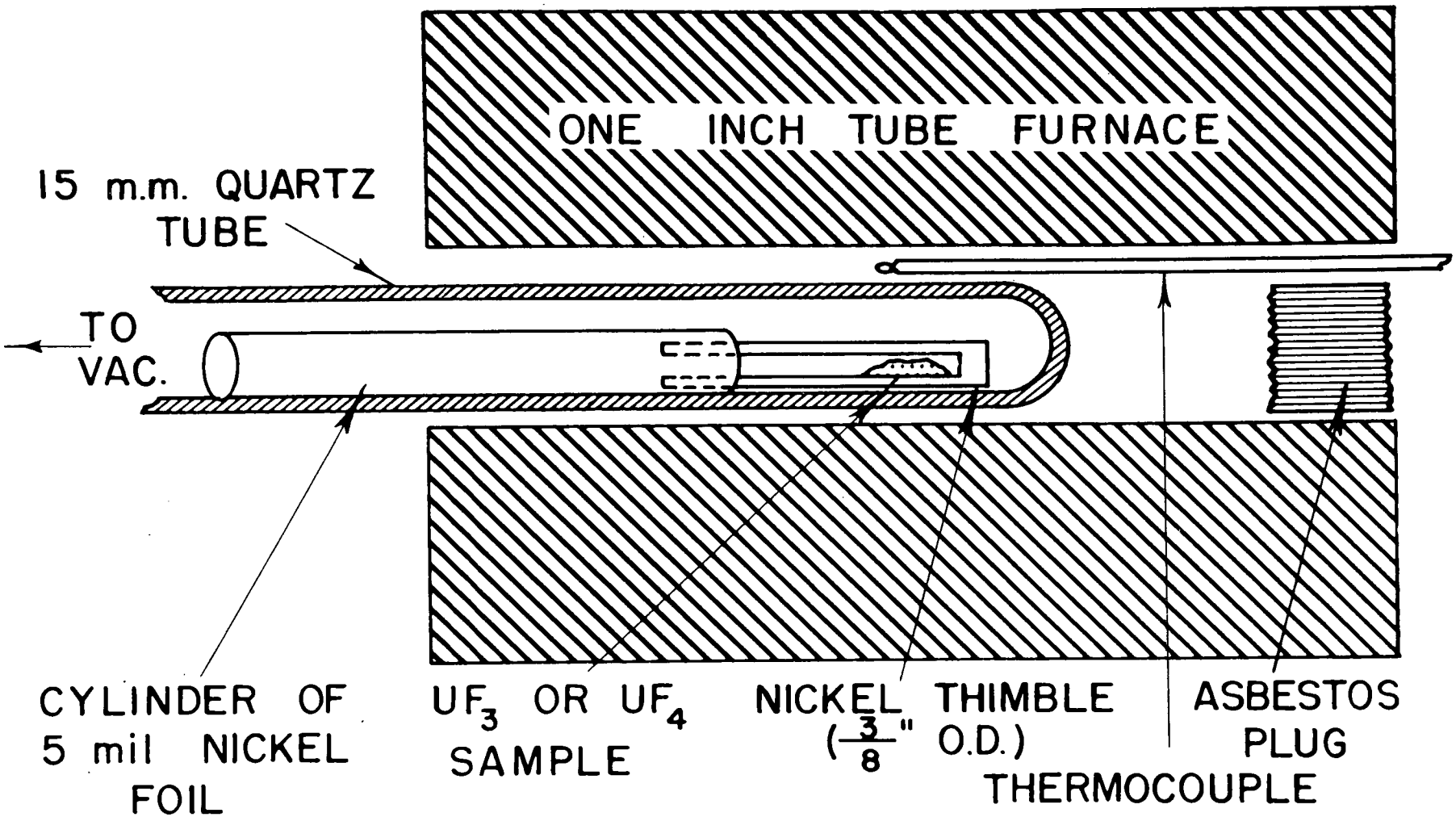

FIGURE 2. VACUUM SUBLIMATION APPARATUS

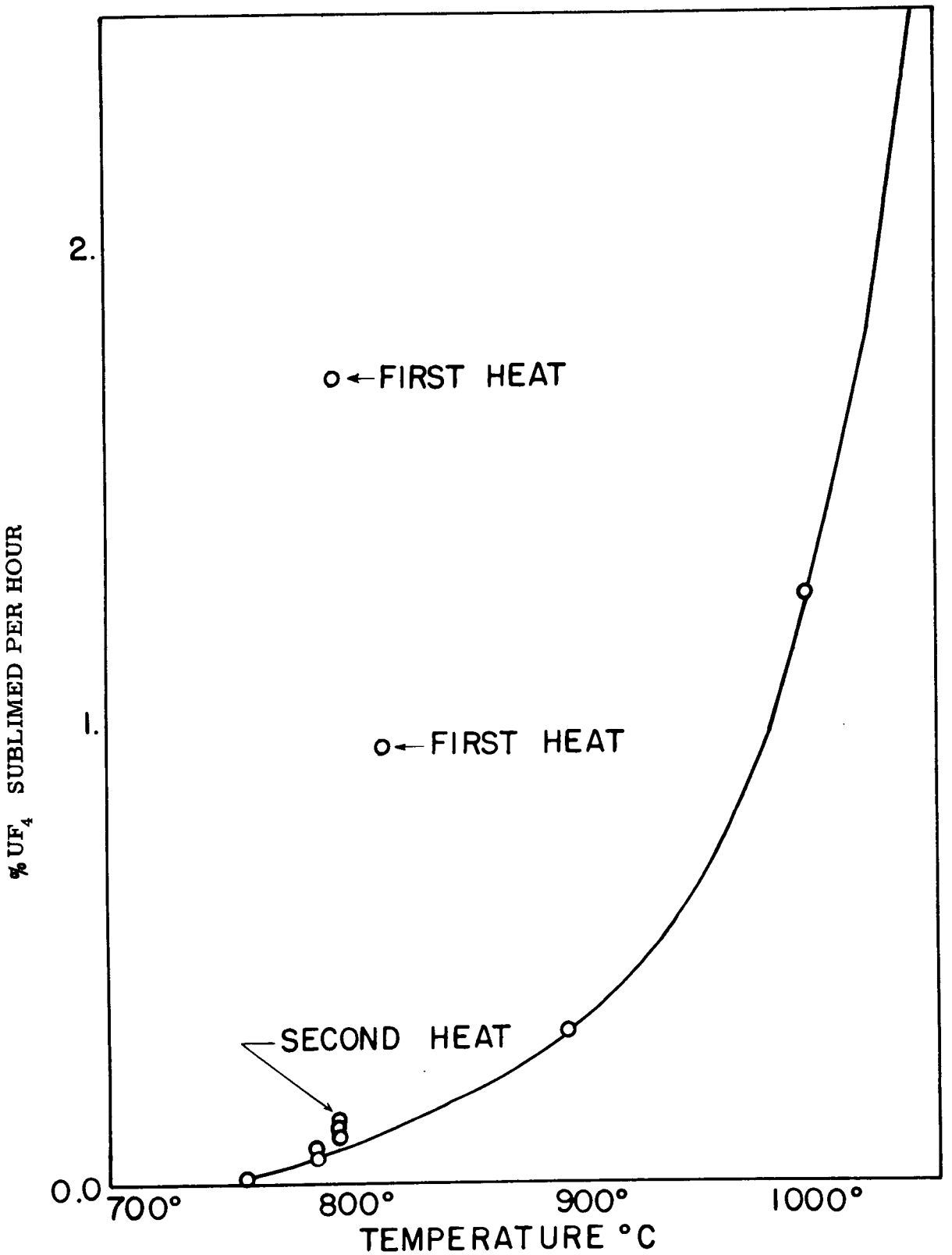

FIGURE 3. DISSOCIATION OF UF_3 % LOSS PER HOUR UNDER VACUUM

$$4UF_3 \longrightarrow 3UF_4 + U$$

This demonstrates the contamination of the original material with residual or unreacted UF_4 which quickly sublimes out of the crude UF_3. By subtracting the dissociation at 800°C as represented by the plot for the standard length of heating from the total weight loss on first heating, the contamination with UF_4 was found to be 13.7 per cent, in agreement with the chemical analysis.

By repeated heating of the material under the same conditions at varying temperatures the data for the dissociation plot were obtained. The results confirm the earlier reported dissociation behavior of UF_3, however, no attempt was made to analyze this data quantitatively because of its cursory nature and the fact thata rate process is in action which is affected by internal diffusion rates, sample size, and geometry; rather than a thermodynamic equilibrium. The best uranium trifluoride produced as a result of this study and referred to earlier showed a contamination by this method of about 2.3 per cent UF_4 as contrasted to about one per cent by chemical analysis. This lot of uranium trifluoride was the one used for the mass spectometer tests.

The materials under examination were held in a 1/8-inch diameter platinum tube 1-1/2 inches long and closed at one end. This oven was heated as shown in Figure 4 with the vapor passing from the open end into the ionization region. In order to get a better picture of the principle involved in this type of mass spectrometer analysis a few words are necessary concerning cracking patterns for typical halide salts. In general, when a simple halide salt is vaporized and subsequently bombarded with a stream of moving electrons in the vapor phase the number of halide atoms removed will differ from collision to collision if energy enough is available. In this investigation 75-volt electrons were used throughout and the typical ion current yields for the various single plus ions formed for nearly pure uranium tetrafluoride is shown in Figure 5. The important point to observe here is the fact that the ion which shows the loss of a single halide atom is the most abundant. It is expected therefore, that uranium trifluoride should yield as its most abundant ion, uranium difluoride with a single plus charge. The uranium tetrafluoride cracking pattern has been shown and uranium pentafluoride (UF_5) and hexafluoride (UF_6) each show a similar behavior. The evidence of uranium pentafluoride in tetrafluoride can be found by observing the cracking pattern of pure UF_4 and determining a standard yield ratio between singly-charged uranium trifluoride ions and singly-charged uranium tetrafluoride ions. The same ratio determined for a uranium fluoride mixture containing uranium pentafluoride should show a very sensitive change in this ratio due to the increased contribution of UF_5 to the UF_4 singly-charged peak. Figure 6 shows such a uranium tetrafluoride sample of supposedly pure material made by the hydrofluorination of uranium dioxide. Chemical analyses show it to be 75.80 per cent uranium; as close to theory as experiment will allow for UF_4. Yet this

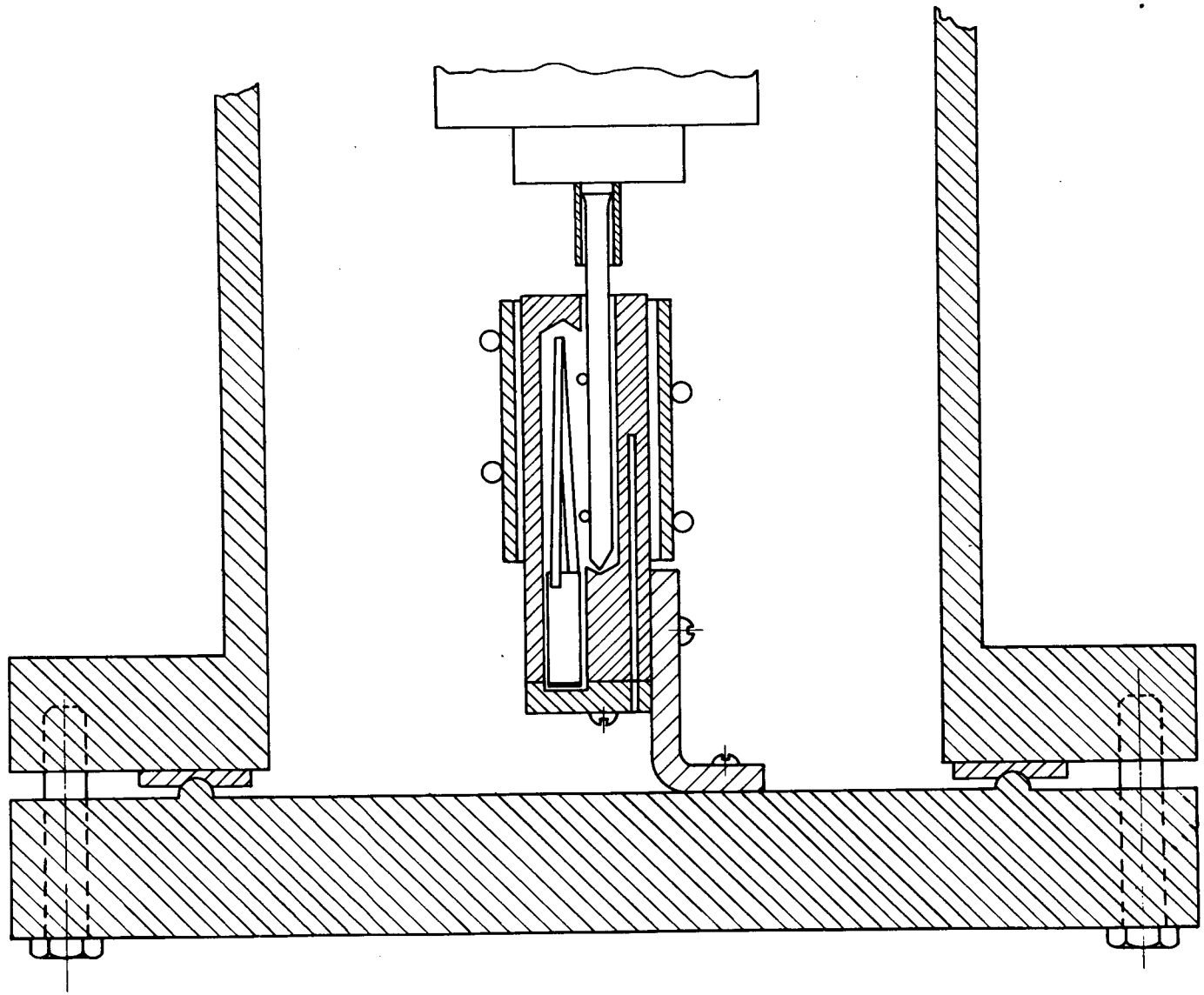

FIGURE 4. ION SOURCE OVEN

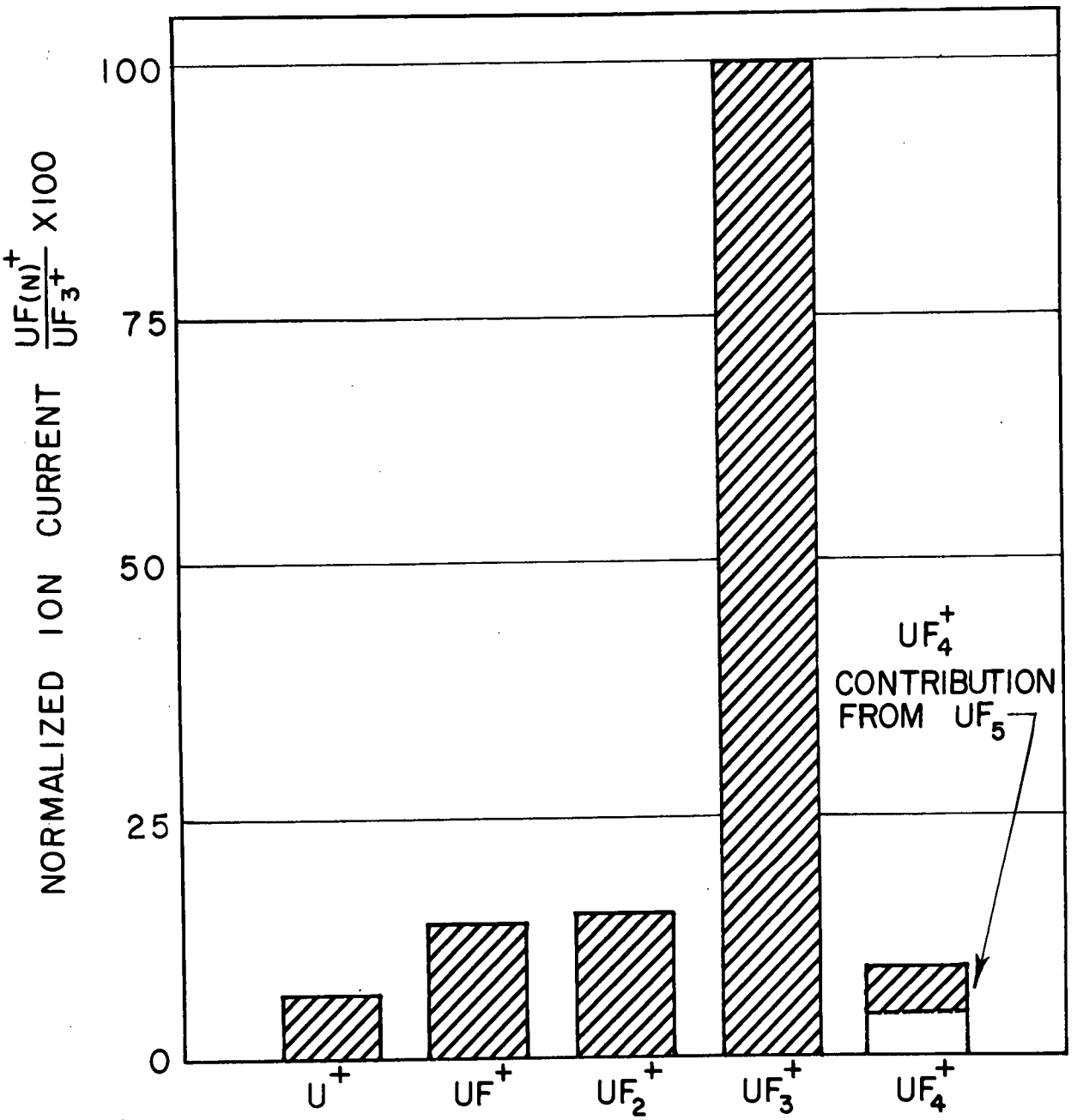

FIGURE 5. TYPICAL UF4 CRACKING PATTERN (585° C SMALL UF_5 CONTAMINATION)

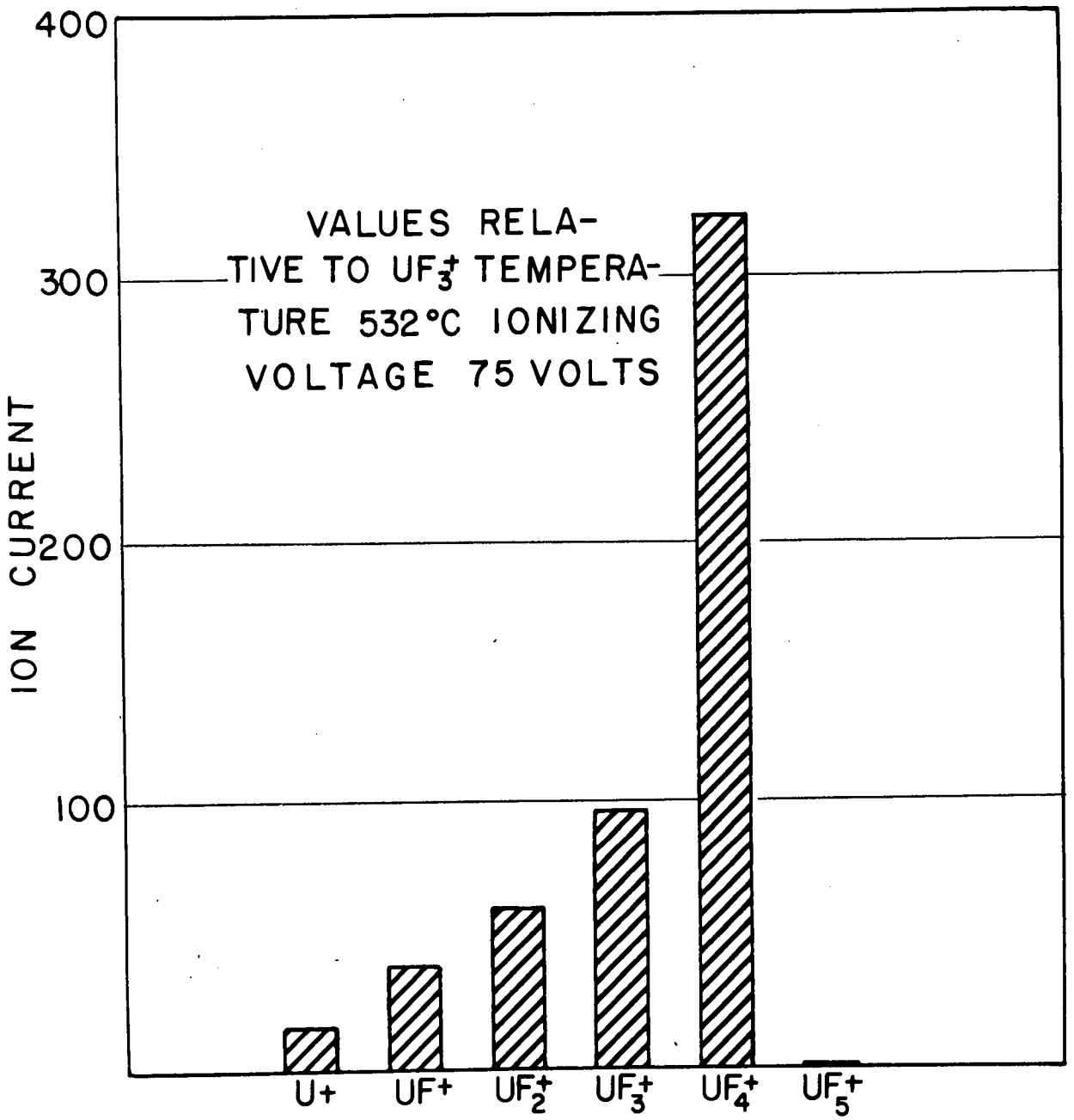

FIGURE 6. CRACKING PATTERN OF UF_4 AT FIRST HEATING

shows a larger ion current at mass position UF_4^+ than at UF_3^+ (Figure 7). This plot of the ratio shows a residual contamination with UF_5 and a plateau region at about 7.5 per cent UF_4^+ which it is believed represents the formation of UF_5 in the sample from compounds of uranium formed by oxidation during synthesis or storage.[7] At the end of this reaction period the ratio of UF_4^+ to UF_3^+ drops to the normal value for pure UF_4, shown at the right of the plot, when the higher valent components of uranium have been exhausted. This UF_4 material upon subsequent examination fails to show further evidence of UF_5.

When uranium trifluoride is treated in like manner a plot (Figure 8) similar to the one for uranium tetrafluoride is found, even to and including the original contamination with uranium pentafluoride. There again is no evidence for sublimation of UF_3 as an entity. The uranium pentafluoride formation must take place after the formation of UF_3 since it is hard to conceive of a uranium compound of valence greater than four existing in the presence of an overpowering excess of uranium trifluoride at 900°C.[8] Therefore, it can be assumed that the oxidation responsible for the formation of uranium pentafluoride takes place at room temperature after the opening of the reaction vessel and the removal of the product uranium trifluoride. No evidence of the very volatile hexafluoride was found in any of this work.

The following conclusions are emphasized. Uranium trifluoride dissociates at temperatures above 700°C into uranium tetrafluoride and uranium metal in confirmation of the literature, but at lower temperatures than heretofore reported. No evidence of the sublimation of uranium trifluoride as such was found at temperatures up to 750°C in the mass spectrometer or up to 1000°C in our sublimation tests. Even uranium trifluoride prepared by the reduction of uranium tetrafluoride with uranium metal shows some evidence of higher valent compounds of uranium which give rise to UF_5 on heating. All uranium tetrafluoride examined to date, that had not been heat treated, has shown pronounced evidence of uranium pentafluoride contamination when examined in the mass spectrometer.

---

7. Kirslis, S. S., T. S. McMillan, and H. A. Bernhardt, "The Reaction of UF with Dry Oxygen," K-567, March 15, 1950.
8. Agron, Paul A., "The Thermodynamics of Intermediate Uranium Fluorides from Measurements of the Disproportionation Pressure," AECD-1878, Columbia University, January 16, 1948.

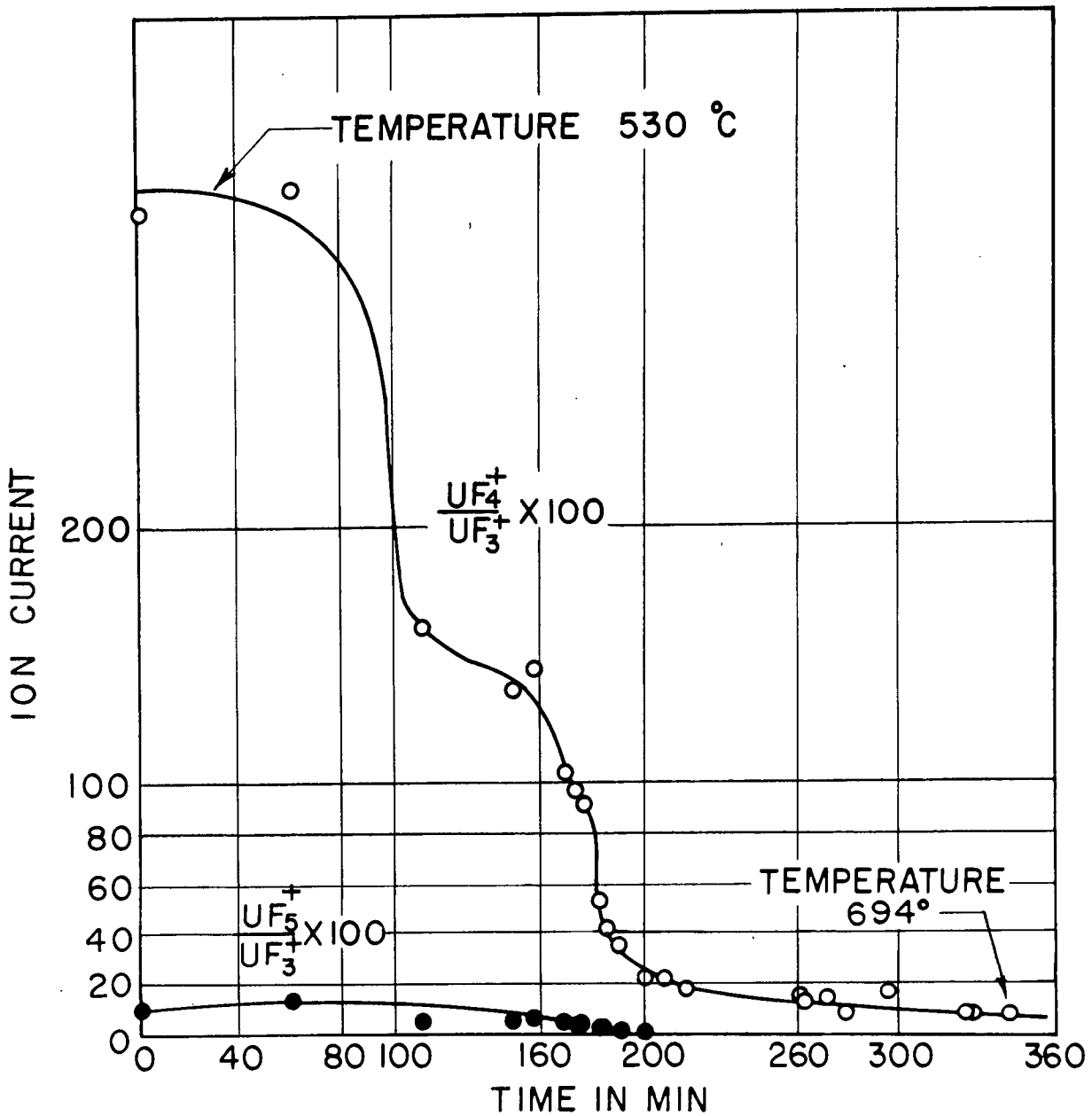

FIGURE 7. USUAL UF_4 PATTERN FROM "PURE" SALT

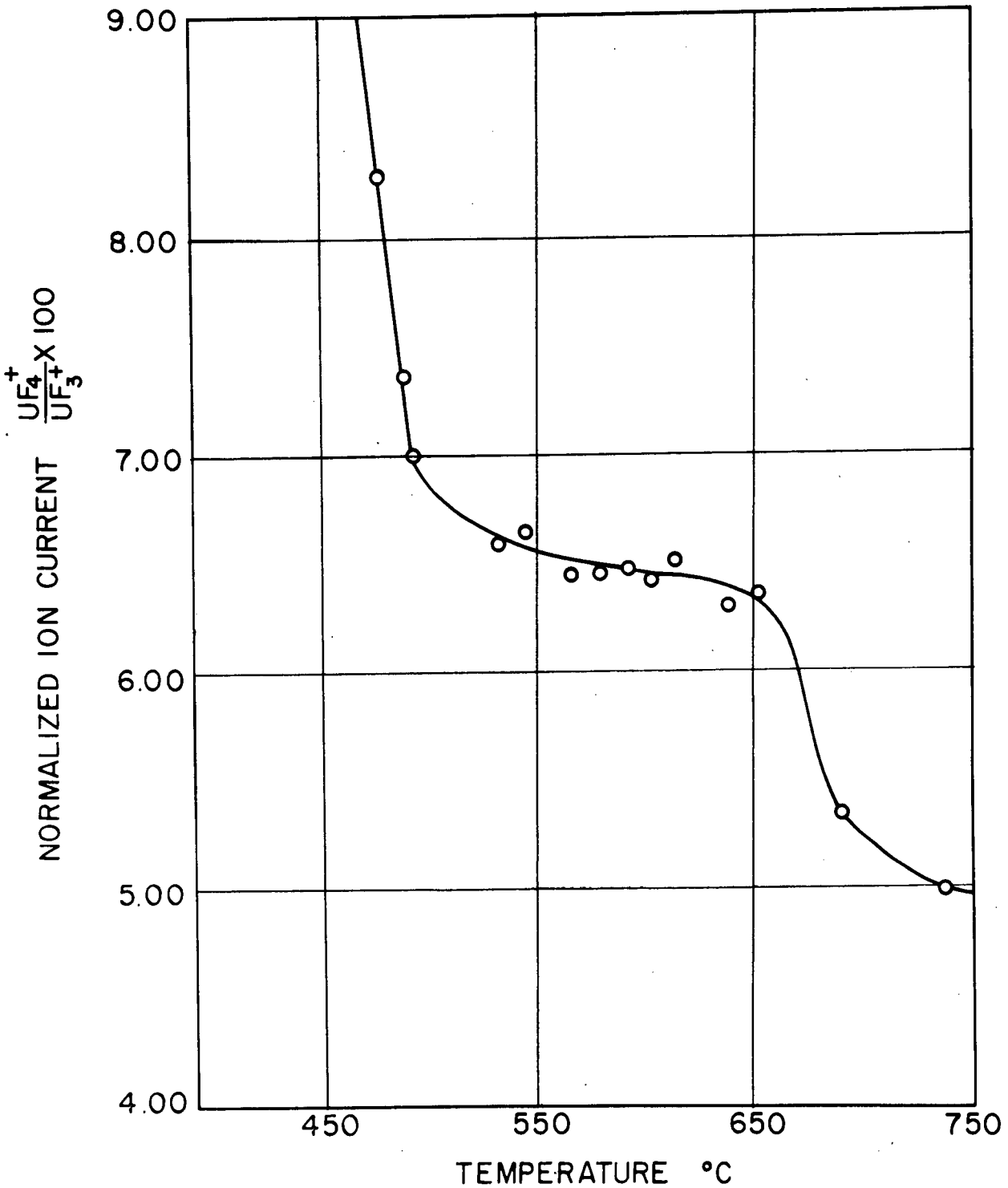

FIGURE 8. UF_3 SUBLIMATION