[redacted]

ORNL-1386

CENTRAL RESEARCH LIBRARY

MARTIN MARIETTA ENERGY SYSTEMS LIBRARIES
3 4456 0353156 9

LABORATORY RECORDS

[redacted]

# THERMAL CYCLING OF URANIUM

BY

Nathaniel Stetson
Melbourne L. Winton

[redacted]

DECLASSIFIED
CLASSIFICATION CHANGED TO:
BY AUTHORITY OF: TID 1224
BY: N. Bowman 7/26/60

OAK RIDGE NATIONAL LABORATORY
OPERATED BY
CARBIDE AND CARBON CHEMICALS COMPANY
A DIVISION OF UNION CARBIDE AND CARBON CORPORATION
OAK RIDGE, TENNESSEE

[redacted]

[redacted]

[redacted]

19A

Index No. ORNL-1386
This document contains 42 pages
This is co[redacted]eries A
[redacted]
Category: Metallurgy and Ceramics

# THERMAL CYCLING OF URANIUM

Nathaniel Stetson
Melbourne L. Winton

ELECTROMAGNETIC RESEARCH DIVISION
Robert S. Livingston, Director

August 1952

[redacted]

OAK RIDGE NATIONAL LABORATORY
Operated By
Carbide and Carbon Chemicals Company
A Division of Union Carbide and Carbon Corporation
Oak Ridge, Tennessee

Contract No. W-7405-eng-26

[redacted]

MARTIN MARIETTA ENERGY SYSTEMS LIBRARIES
3 4456 0353156 9

[redacted]

Index No. ORNL-138
Metallurgy and Ceramics

Distribution, Series A:

1-26. Carbide and Carbon Chemicals Company
27-34. Argonne National Laboratory
35-42. Atomic Energy Commission, Washington
43. Battelle Memorial Institute
44-46. Brookhaven National Laboratory
47. Brush Beryllium Company
48. Bureau of Ships
49-58. California Research and Development Company
59-60. Carbide and Carbon Chemicals Company (K-25 Plant)
61. Chicago Patent Group
62. Dow Chemical Company (Rocky Flats)
63-65. duPont Company
66-68. General Electric Company (ANPP)
69-73. General Electric Company, Richland
74. Hanford Operations Office
75-78. Idaho Operations Office
79. Iowa State College
80-83. Knolls Atomic Power Laboratory
84-86. Los Alamos
87. Massachusetts Institute of Technology (Kaufmann)
88. Massachusetts Institute of Technology (Benedict)
89-91. Mound Laboratory
92. National Advisory Committee for Aeronautics, Cleveland
93. National Advisory Committee for Aeronautics, Washington
94. National Bureau of Standards
95. National Lead Company of Ohio
96. Naval Research Laboratory
97. New Brunswick Laboratory
98-102. New York Operations Office
103-105. North American Aviation, Inc.
106. Patent Branch, Washington
107. Rand Corporation
108. Savannah River Operations Office (Augusta)
109. Savannah River Operations Office (Wilmington)
110. Sylvania Electric Products, Inc.
111-114. University of California Radiation Laboratory
115-118. Westinghouse Electric Corporation
119-126. Wright Air Development Center
127-141. Technical Information Service, Oak Ridge

Carbide and Carbon Chemicals Company internal distribution as follows:

| | | | | | |
|---|---|---|---|---|---|
| 1. | C. E. Center | 7. | J. A. Swartout | 14. | A. L. Bush |
| 2. | C. E. Larson | 8. | J. H. Frye | 15. | F. T. Howard |
| 3. | L. B. Emlet | 9. | E. J. Boyle | 16. | J. S. Luce |
| 4. | W. B. Humes | 10. | R. J. Beaver | 17. | J. A. Martin |
| 5. | A. M. Weinberg | 11. | J. E. Cunningham | 18. | M. L. Winton |
| 6. | E. D. Shipley | 12. | R. B. Small | 19-22. | X-10 Central Files |
| | | 13. | R. S. Livingston | 23-26. | Reports Office, TID |

Issuing Office
Technical Information Department, Y-12 Plant
Date Issued: OCT 17 1952

[redacted]

[redacted]



## ABSTRACT

An apparatus has been designed and used successfully for the thermal cycling of test rods of various metals. Heating is obtained by passing an electrical current through the rod. The equipment provides a wide range of cycling rates and a choice of coolants.

Thermal cycling of water-cooled alpha-rolled uranium rods at 8 cps with a 20% duty cycle and an average power input of 15 kw/in$^3$ produces no elongation of the rods. At higher temperatures and greater temperature fluctuations, obtained with a slower cycling rate and with helium cooling, marked elongation is readily produced. With the minimum temperature held at ~100°C elongation occurs when the maximum temperature exceeds 250°C; at 500°C an elongation of 18% was observed.

Stress failure, without elongation, is observed when the water-cooled uranium rods are subjected to an average power input exceeding 25 kw/in$^3$ at 400 cpm and 33% duty cycle. At these high thermal gradients the rods become badly splintered.

[redacted]

[redacted]



## TABLE OF CONTENTS


| | Page |
|---|---|
| Introduction | 5 |
| Dimensional Instability of Uranium | 5 |
| Tests With Pulsed Proton Beam | 7 |
| Resistance Heating Cycler | 11 |
| Experimental Apparatus | 11 |
| Thermal Cycling | 18 |
| Stress Cycling | 20 |
| Testing of Other Metals | 29 |
| Summary and Conclusions | 32 |
| Acknowledgements | 34 |
| Appendices | |
| A: Parts List for Pulsed Power Supply | 35 |
| B: Summary of Tests with Pulsed Protons | 36 |
| C: Group I Tests | 37 |
| D: Group II Tests | 38 |
| E: Group III Tests | 39 |
| F: Group IV Tests | 40 |
| G: Group V Tests | 41 |
| H: Group VI Tests | 42 |


[redacted]

[redacted]



## THERMAL CYCLING OF URANIUM

Problems are encountered in the design and operation of nuclear reactors because of the dimensional instability of uranium when it is subjected to high heat transfer rates and cycling thermal conditions. It has been found that uranium undergoes considerable deformation when thermally cycled at slow rates, one cycle in 30 minutes to one cycle in 5 minutes. Recently, interest has developed concerning the behavior of uranium under faster thermal cycling conditions, up to several hundred cycles per minute. This investigation of thermal cycling of uranium was undertaken by the Electromagnetic Research Division because of the availability of equipment suitable for producing thermal and stress variations in the desired range.

The initial aim of the project was to determine the behavior of uranium under fast cycling conditions. After these original tests had been completed the cycling equipment was used in determining the conditions which would produce dimensional changes in uranium and to explore the damage produced by large cyclic thermal stresses.

### Dimensional Instability of Uranium

Deformation of the aluminum-jacketed uranium fuel rods in nuclear reactors has been a matter of concern for several years. The first changes observed were surface bumps on the Hanford processed slugs. This "blistering" was also accompanied by some warping. It has been established that changes in shape occur in materials having a high degree of preferred orientation in crystal structure and fine grain size.

[redacted]

The three solid phases of uranium--alpha, beta, and gamma--are characterized by their crystalline structures, which are determined by the working temperature. The alpha phase is produced at temperatures below 660°C, beta phase at 660 to 760°C, and the gamma phase above 760°C. It is generally known that uranium, when repeatedly heated and cooled between temperatures of 50 and 550°C, increases in length. The rate of growth is influenced by such variables as: texture, grain size, temperature range over which cycling occurs, holding time at the upper temperature, composition of the metal, rate of cycling, and number of cycles.

In an investigation of the effects of thermal cycling on uranium, Kelman[1] has observed:

1. A certain preferred orientation is necessary for the growth of uranium under thermal cycling. Beta quenching produces a specimen which shows little change upon thermal cycling.

2. For a given set of cycling conditions, and texture, the grain size has a marked effect upon the amount of growth.

3. Increases in growth rate result from increased holding time at the upper temperature of a cycle, raising the upper temperature from 300 to 660°C, or increasing the cooling time.

It is generally accepted that the dimensional changes in uranium caused by thermal cycling are associated with anisotropy in its coefficient of thermal expansion. A mechanism to account for these changes, proposed by Burke[2] and Turkalo,[3] is a ratchet-like action which depends upon grain-boundary flow to relax stresses produced by anisotropic expansion at high temperatures and upon crystallographic slip to relax the oppositely-directed stresses.

---

1. Kelman, L. R., Dimensional Changes in Uranium Under Thermal Cycling, J. Met. Ceramics, 4:7, Sept. 1949.
2. Burke, J. E., "A Mechanism to Account for the Dimensional Instability of Uranium", Proceedings of Oak Ridge Metallurgy and Materials Information Meeting, TID-5061, p. 277, April 1951.
3. Turkalo, A. M., "Thermal Ratcheting of Zinc Bi-Crystals", Proceedings of Oak Ridge Metallurgy and Materials Information Meeting, TID-5061, p. 265, April 1951.

## TESTS WITH PULSED PROTON BEAM

Equipment already available in the Electromagnetic Research Division was used for the initial testing. This equipment consisted of two calutron units which had been modified to produce large proton currents. The test specimen was bombarded at a point 90° from the proton source to insure distribution of the beam over the 1 1/2 $in^2$ of target area. The arrangement of equipment was similar to that shown in Figure 1. Steady calutron operation at 40 kv yielding the 40 to 50 milliampere proton beam necessary to produce a heat flux of 1200 watts/$in^2$ was easily obtained. After the initial tests to determine the operating characteristics and the uniformity of the beam at the target, the ion source power supply was modified to pulse the beam at the rate of 60 pulses per second, with a rectified sinusoidal waveform. This was accomplished by modifying the six-phase half-wave arc voltage rectifier to a half-wave rectifier circuit and by removing all filters in the output of the supply. The original plan was to apply a 60-cycle alternating potential to the ion source arc and to allow the arc to provide the rectifying action. This resulted, however, in such severe erosion of the filament that its maximum life was limited to about five hours. The use of half-wave rectified voltage eliminated this difficulty.

The test specimens were metal tubes 3 1/2" long, 7/16" ID, and 3/4" OD. Each tube was mounted in the modified calutron in such a manner that the surface could be bombarded while the interior was water cooled. The average power input to the specimen was 1200 watts/$in^2$ at 60 cps. The specimens tested in this manner included twelve alpha-rolled uranium, three alpha-rolled tubes which had been fast beta heat-treated, six thorium, three stainless steel, and one aluminum, see test summary in Appendix B.

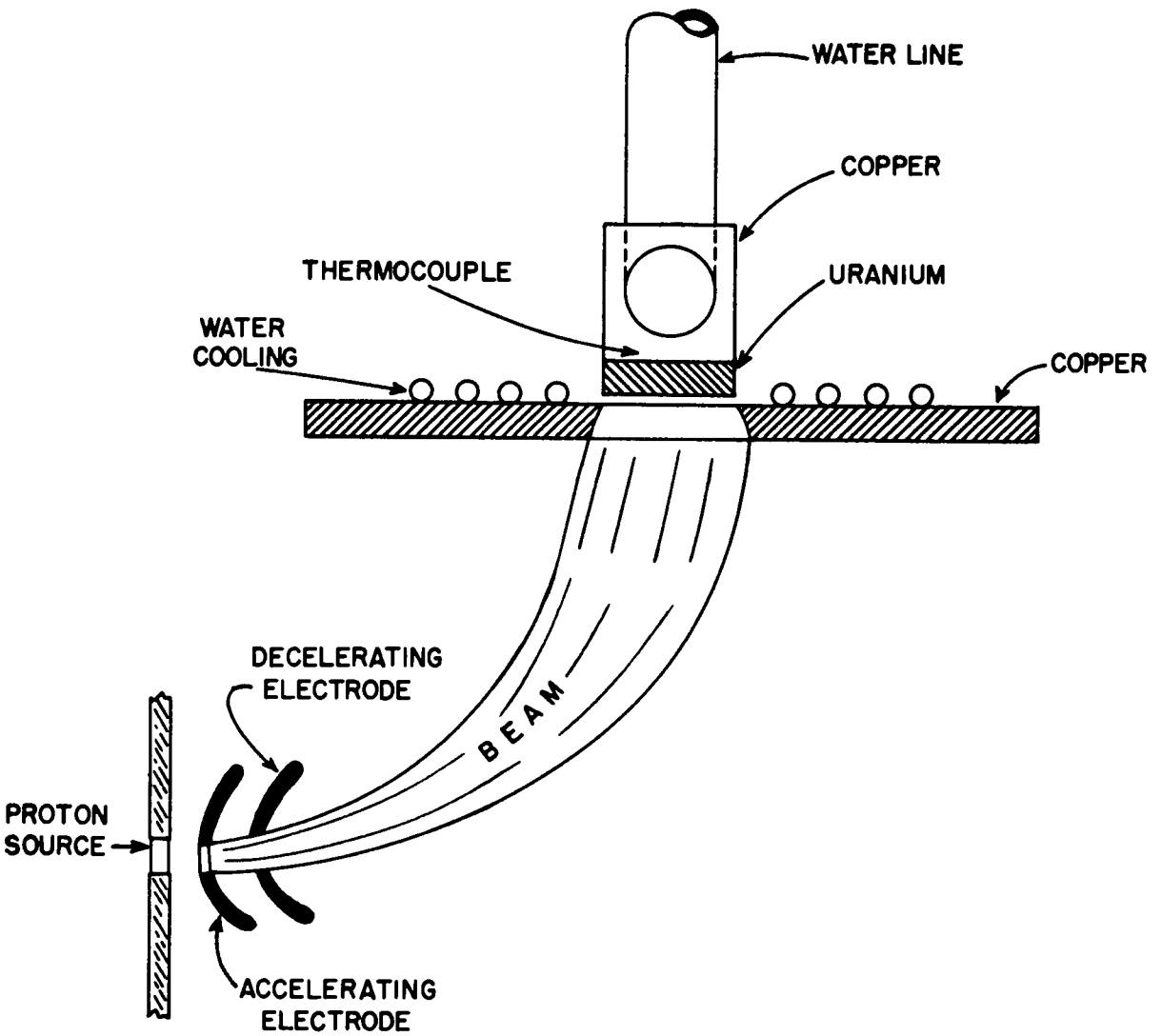


FIGURE I. EQUIPMENT FOR PROTON BOMBARDMENT

In order to plate a thin layer of copper on the surface, the uranium tubes were cleaned electrically and then placed in a 20% solution of $CuSO_4$ for 24 hours. The use of 0.05% solution of $CuSO_4$ as coolant was expected to heal any breaks in the copper coating caused by erosion or the action of heat upon the tube. Distilled water was used as the coolant for all of the stainless steel and aluminum tubes and for half of the thorium tubes. The coolant was maintained at 30°C for the early runs and held at 80°C for later runs.

The first 12 uranium test specimens were alpha-rolled uranium; tubes 13, 15, and 16 were alpha-rolled and fast-beta heat treated. After melting was observed in some of the early tests a more careful examination was made of the uniformity of the proton beam. A complete survey of the beam showed a maximum variation in beam intensity of only 30%, which should not cause any difficulty with "hot spots".

In an attempt to produce large temperature swings and thus greater dimensional changes, alpha-rolled uranium, tube U-11, was tested at a cycling rate of one cycle per minute, with a duty cycle of 50% for 2000 cycles. The proton beam produced a heat flux of 1200 watts/in$^2$. No dimensional changes were detected in the tube. It is assumed that the cooler inner portion of the tube restrained any growth which might have been produced if the full section of the tube had been cycled.

The following conclusions are made from the calutron testing of uranium tubes:

1. All failures resulted from corrosion, local melting, or faulty samples, see Figure 2.

2. A negligible temperature swing is obtained at 60 cps.

3. Since only the surface of the metal could be cycled under conditions calculated to produce growth the restraining influence of the underlying metal prevented growth.

FIGURE 2. FAILURES IN URANIUM TUBES

# RESISTANCE HEATING CYCLER

In order to approximate the desired heat load conditions, and to avoid the surface heating obtained by proton bombardment, a resistance heating method was developed for thermal cycling the test specimens. This method has the advantage that the heat is developed uniformly within the test rod by an electric current.

## Experimental Apparatus

Mechanical. The principal components of the resistance thermal cycler are shown in Figure 3. To establish a thermal cycle the metal rod must be alternately heated and cooled. Heating is obtained from an electrical current flowing through the metal. The cooling is provided by the flowing water, or gas, which surrounds the metal specimen.

The metal rods tested in the early runs were 14" long and 1/4" in diameter. The rods are supported in the horizontal section of the test chamber by two clamps, Figure 4. One clamp is connected rigidly while the other one is supported by a flexible cable about 18 inches long which permits the test rod to expand or contract with changes in temperature. After the first two groups of tests the ends of the rods were enlarged to decrease the contact resistance between the rod and the clamps. The clamps are of brass with the contact surfaces silver-plated to reduce resistance.

The narrow portion of the dumbbell-shaped test rod is enclosed in a glass tube of 9/16" inside diameter. This enables the operator to observe the rod at all times, and increases the water velocity. By means of a cathetometer, the surface of the rod can be closely examined and dimensional changes measured.

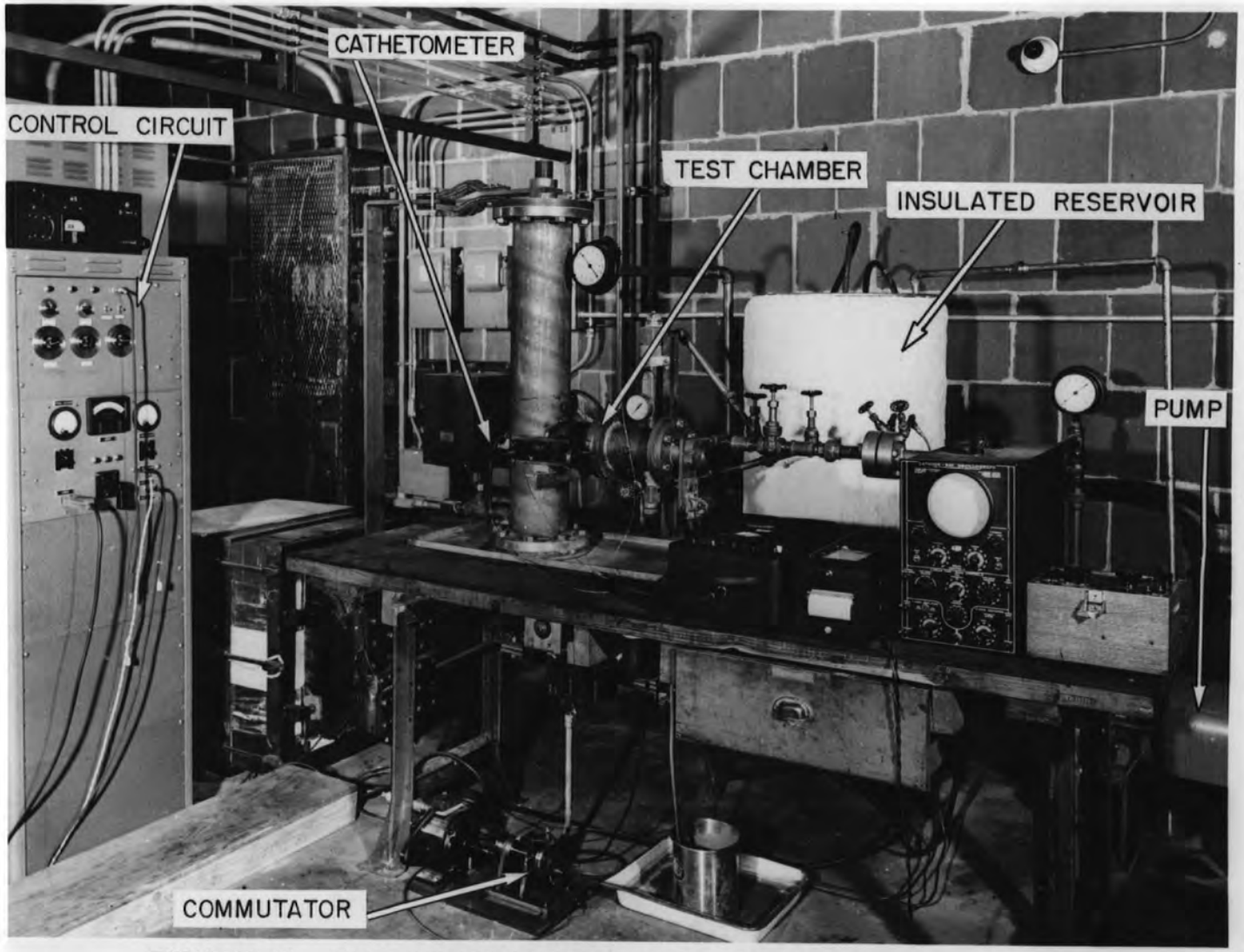


FIGURE 3. THE COMMUTATOR THERMAL CYCLER

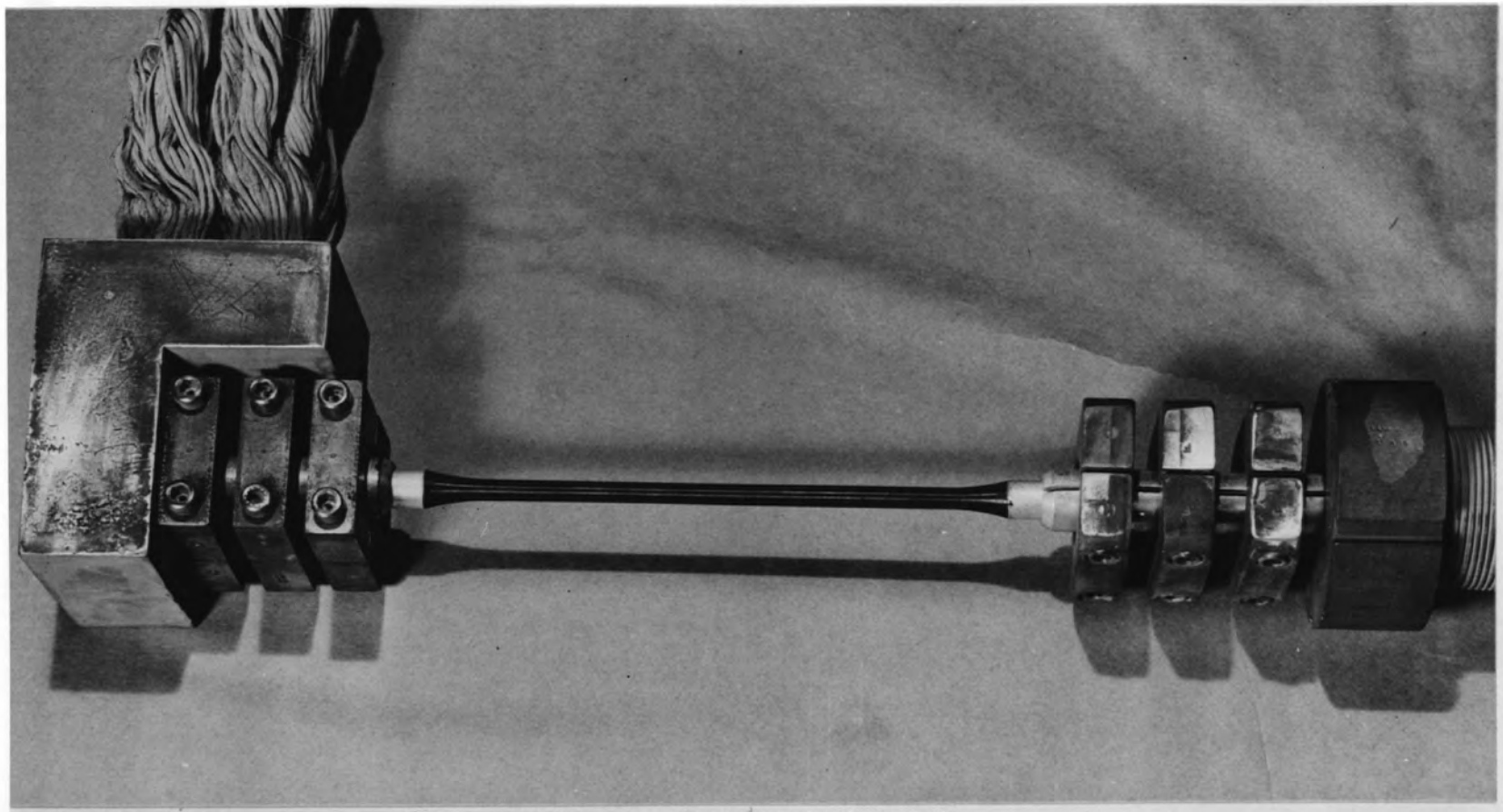

FIGURE 4. TEST ROD IN CLAMPS

The cooling system is shown in Figure 5. Either a gas or water can be used to cool the rod under test. For most of the tests distilled water was used with the addition of small quantities (less than 0.03%) of oxalic acid to keep the water clear of rust. For a few of the tests, 0.05% $CuSO_4$ solution was circulated as the coolant for the purpose of healing breaks in the copper flash coating on the early test rods, but with no apparent advantage. For a 1/4" rod enclosed in a 9/16" ID glass tube the velocities through the tube varied from 9 to 18 fps. The majority of the runs were made with a flow rate of 11 gpm which corresponds to a flow velocity of 18 fps.

Water from a thermally-insulated tank is recycled through the test chamber. Heat is extracted from the coolant by a cooling coil connected to an external water supply. Since the pump and some of the piping were made of iron, there was some rust in the water. The cooling system would be more trouble-free if the pump and all piping were made of non-corrosive material.

Helium was used as the coolant in some tests with this apparatus. The helium was supplied from cylinders and exhausted to the atmosphere. Since these tests were preliminary in nature the construction of a helium recirculating system was not justified.

Electrical. A pulsed electric current of a few thousand amperes is used to heat the sample; the circuit is shown in Figure 6. A welding transformer rated at 375 kva supplies the current. Two ignitrons, connected in inverse parallel in the 460 volt line to the primary, act as switches. The power into the test rod is controlled by the transformer tap position and by the point on the voltage wave at which the ignitrons are fired. The tap position is set manually and the ignitrons are controlled by a resistance-capacitance phase-shift circuit (containing R26, R28, C25, T13, and T12), the power adjustment

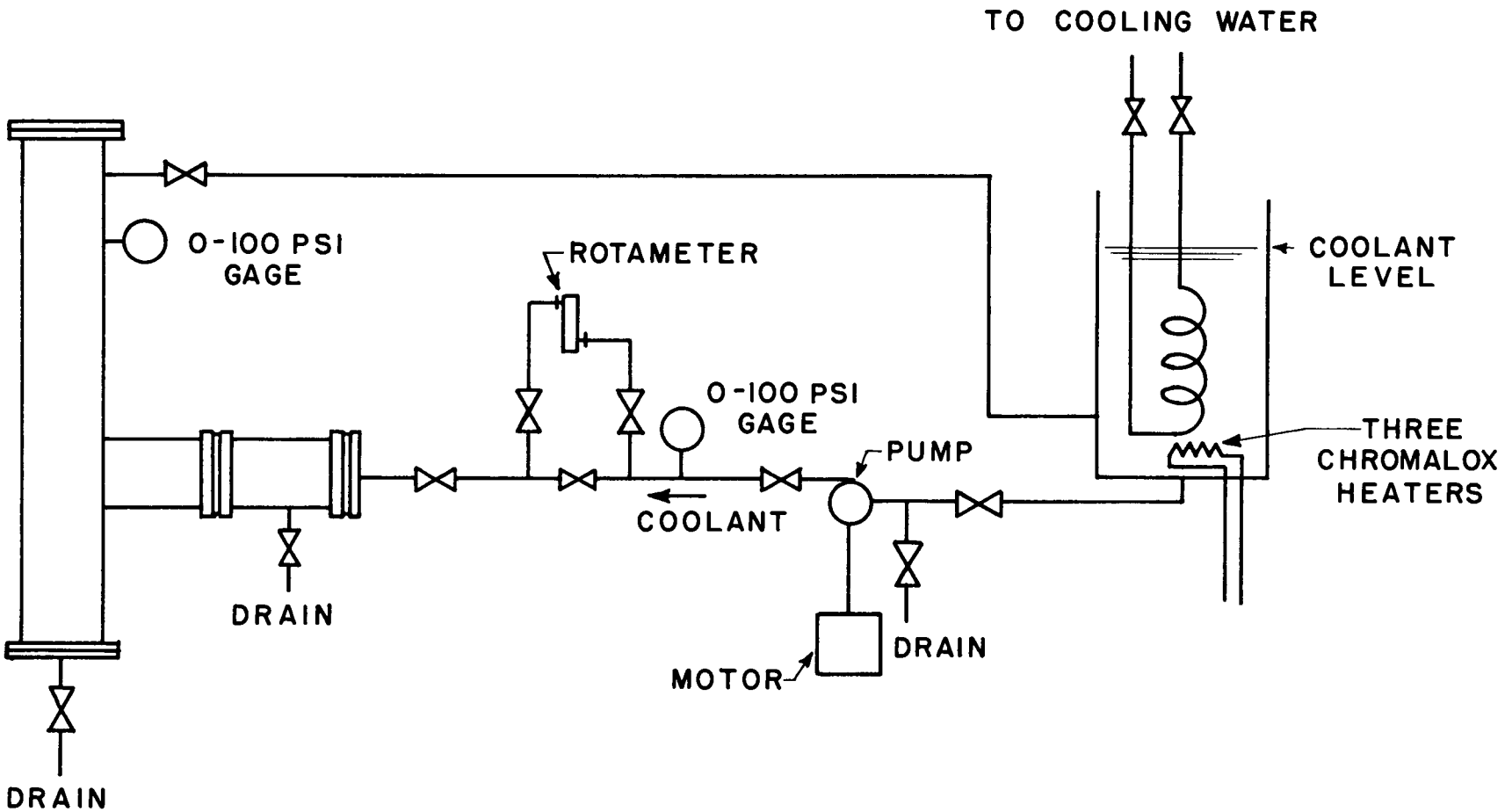


FIGURE 5. WATER COOLING OF THERMAL CYCLER

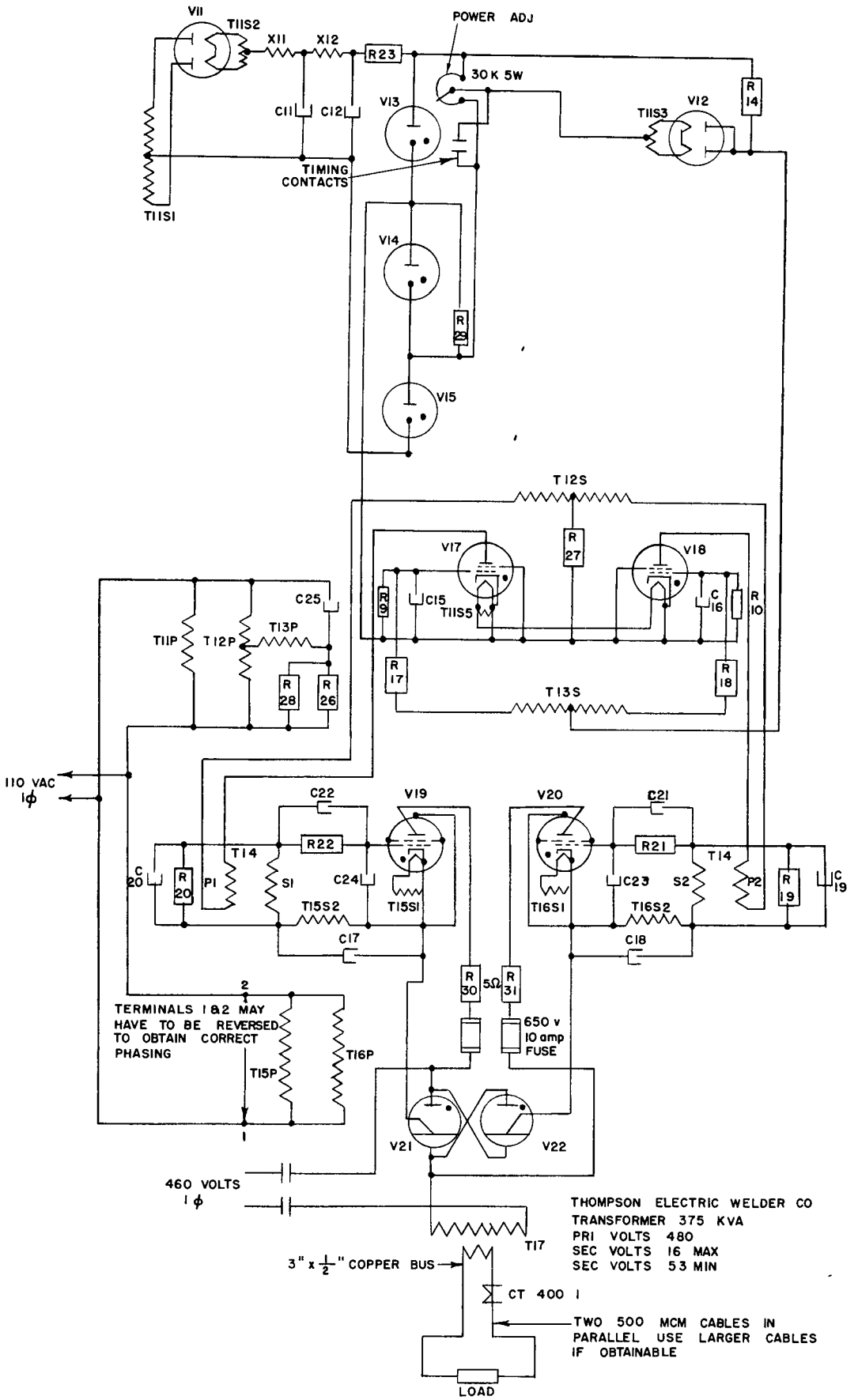


FIGURE 6 POWER SUPPLY FOR THERMAL CYCLING

potentiometer, and a 5Y3 rectifier tube, V12, along with associated resistors, capacitors, etc. The amplifier has two 2050 thyratrons which operate $180^{\circ}$ out of phase with each other, and two FG172 thyratrons which also operate $180^{\circ}$ out of phase with each other.

When the critical value of the thyratron grid voltage is exceeded, the tube fires and the grid loses control until the next positive half-cycle. The firing of the 2050 thyratrons causes the corresponding FG172 thyratron to fire, which in turn causes the FG238 ignitron with which it is associated to become conducting. If the 2050's are fired near the start of their respective positive half-cycle, the current through the ignitron is large. Hence, by controlling the point at which the 2050's fire, the current in the test rod is controlled. Two voltages are applied to the grid of the 2050's, the ac voltage from the phase-shift bridge and the dc bias voltage. The first of the voltages is fixed, but the second may be varied enough to fire the thyratrons and ignitrons at the desired point in the positive half-cycle or to keep them from firing at all. If power adjustment is set at zero the cathodes of the 2050's are positive with respect to the grids and the tubes cannot fire. If the adjustment is set at maximum, the grids of the 2050's will be positive with respect to their cathodes, and the ignitrons are conducting whenever their anode voltages are positive.

When the power adjustment is by-passed with timing contacts a series of pulses of current of fixed frequency and length can be obtained from the ignitrons. A commutator driven by a synchronous motor is used for this purpose. By choosing an appropriate gear ratio the desired cycling rate can be obtained. The percentage of time the contact is opened, called the duty cycle, is determined by the relative length of the insulating segment in the commutator

compared to the conducting segment. The pulse length is determined, of course, by the duty cycle and the cycling rate. Since the period of 60-cycle current is 16 2/3 milliseconds, pulses of shorter duration than 8 1/3 milliseconds are not readily obtained. For pulses of one second a relay is used in place of the commutators.

Thermal Cycling

Preliminary runs were made with stainless steel test rods to locate any difficulties in the electrical or mechanical equipment. For the purposes of reporting, the subsequent tests will be presented in six groups which vary in the average power density, type of coolant, and the cycling rate used. A summary of all test runs in the six groups is given in Appendices C through H.

To provide a temperature calibration for each group of tests, an attempt was made to measure the center and surface temperature of at least one representative test rod in each of the six groups. The surface temperatures are not precise due to intimate contact with the water, turbulence at the junction, and the possibility of oxide formation. In every test, the surface thermocouples cracked off after only a few minutes of operation. Measurements were made of the time required for the thermocouples to reach 63% of full reading under service conditions. It was found that for 32 gage wire the time constant was 0.12 seconds. Without the use of copper dental cement to hold the thermocouple in place the time constant was reduced to 0.008 seconds. These periods increased to 1.2 seconds and 0.04 seconds respectively when 28 gage wire was used for the thermocouple. Therefore, at 30 cycles per minute it appears that the actual internal temperature was successfully measured with the 32 gage wire. With the present technique it is doubtful whether temperature swings at 8 cps can be measured when the duration of the pulse is only 0.025 seconds.

The installation of thermocouples requires that the wire be inserted in the center of the rod. The smallest hole that could be successfully and consistently drilled through 1/4" of uranium was 1/32" in diameter. With failures due to thermal stresses or thermal fatigue, the presence of such a hole gives rise to a point of stress concentration which inevitably hastens failure. After these failures were observed the use of thermocouples was avoided by careful calibration of the power measurements corresponding to the various temperature levels.

Group I. The first group of alpha-rolled uranium rods was tested under the following conditions: average power input 15 kw/in$^3$, 8 cps and 20% duty cycle. The test rods had been alpha extruded to 0.86" at 550°C; cold rolled to 0.5", annealed and again cold rolled to 0.286", cold swaged to 0.262"; and machined to 0.250" ± 0.001" by 14" long. Five tests were completed to determine the behavior of uranium under these conditions. Four of the runs were terminated due to melting of the rods in the clamps. Run U-2 continued for $3.7 \times 10^5$ cycles before being terminated. None of the rods tested under these conditions exhibited dimensional changes.

Group II. To substantiate the reliability of the above tests the equipment was then adjusted to duplicate the thermal cycling conditions which were known to have produced growth in test specimens. Higher temperatures and large temperature swings were in general the conditions used in previous growth studies. In this new group of tests, the rods were cooled with helium instead of water, thus permitting higher temperatures.

Of the seven rods in this group the first, U-6, was prepared in the same manner as those in Group I, above. The other five rods were extruded to 1" at 600°C; alpha rolled to 0.63"; and swaged and machined to 0.25" in diameter.

The rods were cycled between 100 and 500°C, 100 and 250°C, 250 and 500°C, and between 100 and 500°C at rates varying from 1.7 to 4.8 cpm. Accurate temperature limits were assured by using the signal generated in a chromel-alumel thermocouple, welded on the surface of the sample, to control the power transformer. A section of the temperature record chart for test U-11 is shown in Figure 7. From simultaneous measurements of surface and center temperatures the maximum difference was found to be only 8°C.

In all of the tests in which the maximum temperature was 500°C the test rod increased in length. The maximum elongation obtained was 18%. When the maximum temperature was 250°C no dimensional change occurred. A rate-of-growth curve was made for test rod U-7, see Figure 8. The distance between two fiducial marks on the rod was measured after every 100 cycles by means of a cathetometer. These results are in general agreement with those obtained at Argonne National Laboratory[1] which indicate that the maximum temperature should exceed 250 to 300°C before appreciable growth will occur. The test rods show evidences of warping as well as elongation, Figure 9.

Stress Cycling

In the preceding group of tests the thermal cycling conditions used produced rather low temperature gradients between the center and the surface of the test rods. The potentialities of the thermal cycling equipment for stress cycling were evident, however. With the proper choice of pulse characteristics the temperature at the center of the test rod could be cycled several hundred degrees while the temperature of the water-cooled surface remained relatively constant.

---

1. Kelman, Op. Cit.

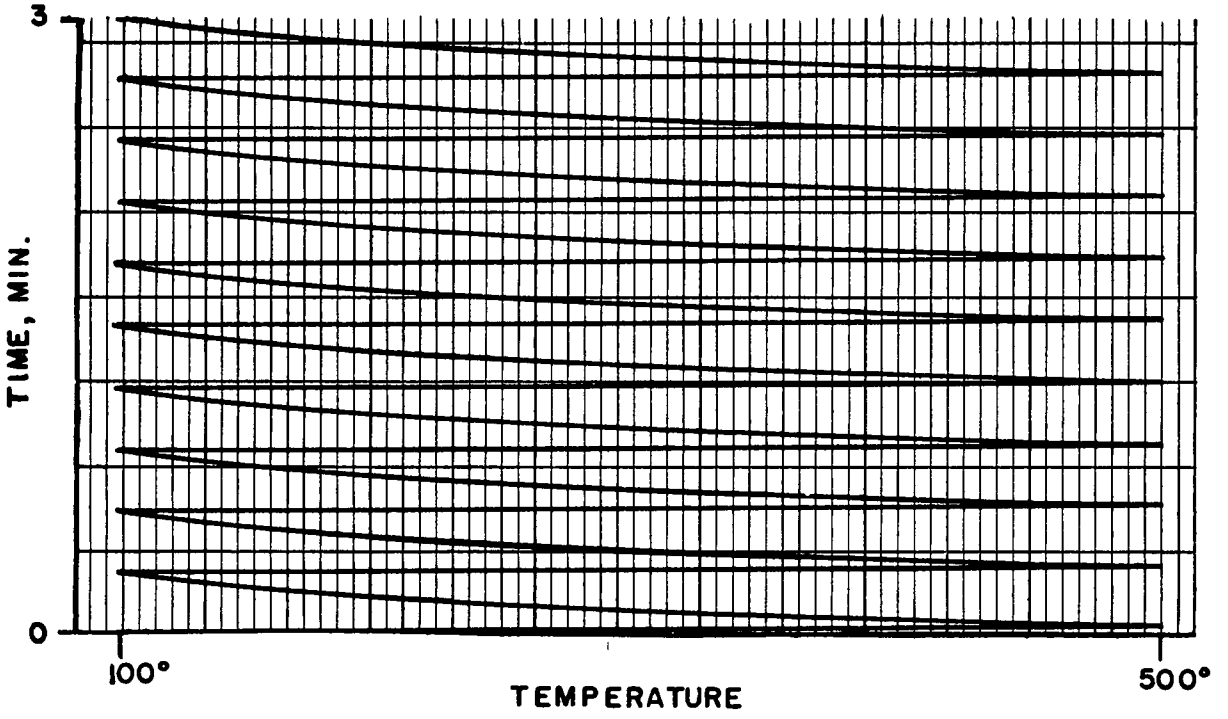


FIGURE 7 TEMPERATURE RECORD, SAMPLE U-11.

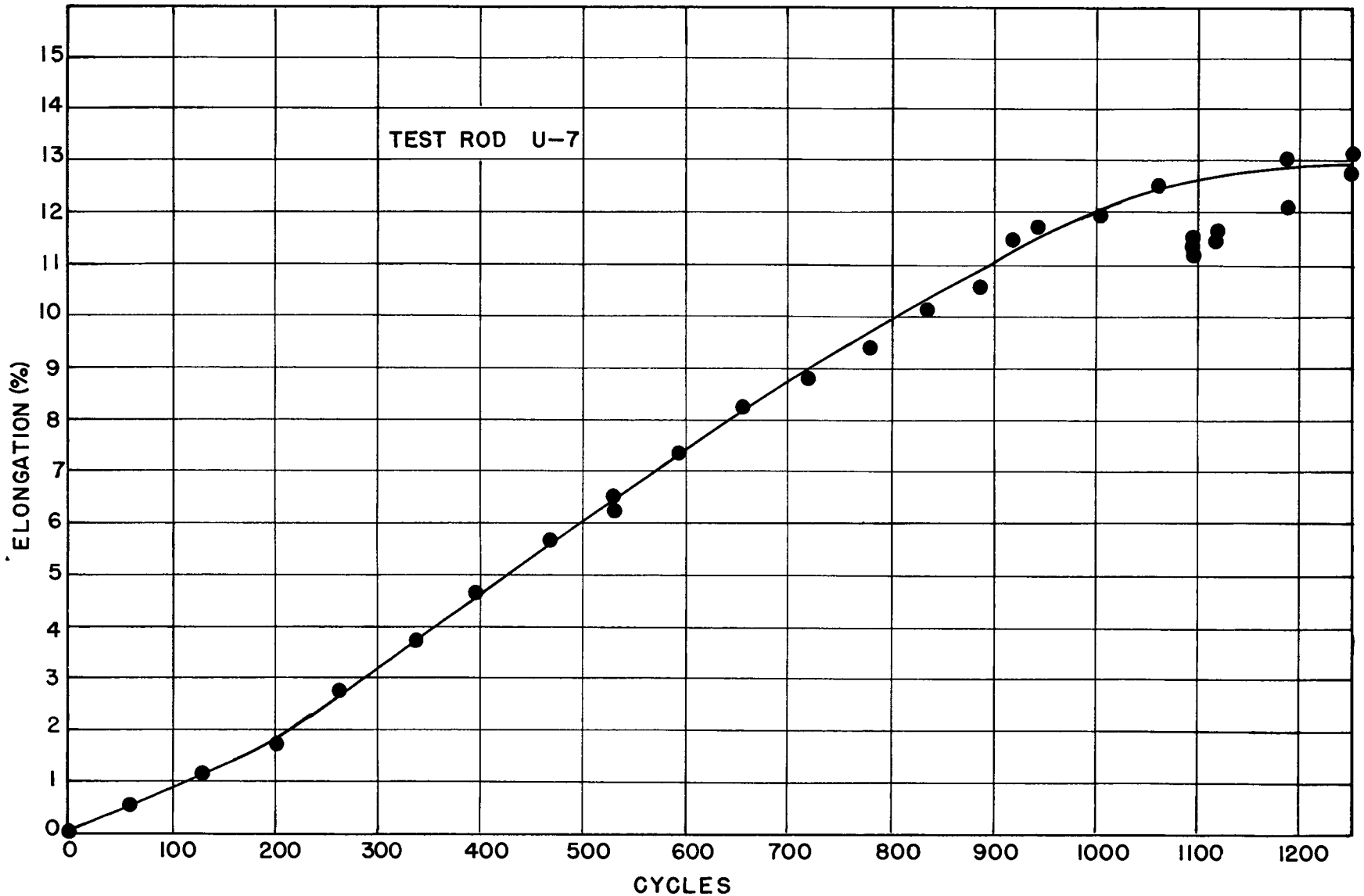


FIGURE 8 RATE OF ELONGATION

FIGURE 9. ELONGATED TEST RODS

To avoid the difficulty previously experienced with rod-to-clamp resistance, the test rods were redesigned to provide greater clamping surface. Also, the ends of the rods were usually silver-plated. In a new "dumbbell" shape, Figure 4, the ends of the 14" rods were 15/32" in diameter with the six-inch central test section 0.25". All of the uranium rods subsequently used were fabricated as follows: 1 1/4" billets were heated to 300°C in an argon atmosphere, rolled to 1 1/8", reheated for every 1/8" reduction to 9/16" diameter in the center section, and machined to the final shape and size.

The test rods were usually cycled until failure occurred. The first evidences of failure was the formation of longitudinal fissures which penetrated deep into the rod, Figure 10. The fissures probably resulted from fatigue failure produced by the high cyclic thermal stresses. In most cases metal fibers seemed to separate and finally to break. Broken surface fibers, bent out radially and forming "spines", were often rather numerous, Figure 11. As more and more fibers broke the effective cross section area of the rod decreased and the electrical resistance increased until the rod finally "burned out".

With high-gradient stress cycling no elongation of the test rods occurred, probably because only the central portion of the cross section reached an elevated temperature.

Group III. Two test rods of this group were cycled at 480 cpm, 20% duty cycle, with maximum center temperatures at ~300°C. The cycle rate was then reduced to 30 cpm, 50% duty cycle, and the power input adjusted to swing the center temperature from 100 to 500°C while the surface temperature varied from 60 to 120°C. Under these conditions the test rods failed after less than 10,000 cycles. Two runs were made without thermocouples to eliminate the stress concentration produced by the holes, the required power level having

FIGURE 10. RODS BROKEN BY STRESS CYCLING

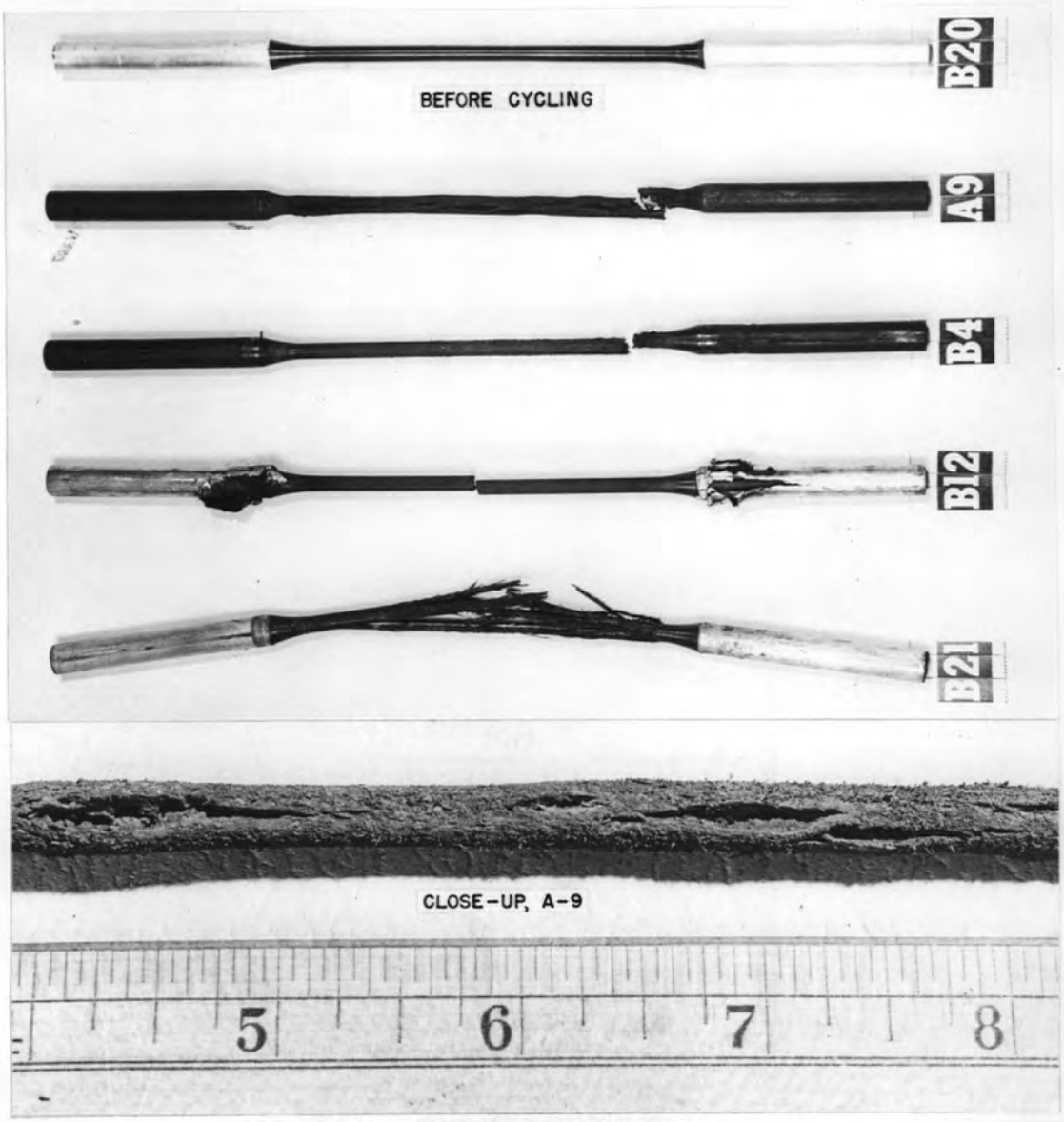


FIGURE 11 SPLINTERED TEST RODS

been determined previously. In every case failure was preceded by longitudinal fissures which appeared after only a few hundred cycles and progressed with fiber breakage to an extent that insufficient metal remained to carry the imposed current. At the cycling rate of 30 cpm and average power density of 26 kw/in$^3$ the calculated stress in the rod is 124,000 psi.

Group IV. The above group of tests demonstrated that stress failure of uranium could be studied with the cycling apparatus, but, since the calculated stress was greater than the elastic limit for uranium, a modification of experimental conditions was required. In this group of rods the calculated stress was reduced to 60,000 psi by increasing the cycling rate to 2400 cpm and increasing the average power input to 50 kw/in$^3$. With an approximate sine wave, the power pulse was "on" a nominal 8 1/3 milliseconds and "off" 16 2/3 milliseconds.

Cracks did not appear in any of these rods until after several hundred thousand cycles and failure did not occur until the rod had been subjected to over a million cycles. To obtain temperature calibration, holes were drilled in one of the rods for thermocouples. At an average power input of 50 kw/in$^3$, the center temperature was 370°C and the surface temperature 94°C. No "swing" was noticed in the readings since the time constants of the thermocouples were much greater than the 8.3 milliseconds "on" time. Without the large temperature swing which occurred in the Group III tests many more cycles could be applied to the test specimen.

Group V. The test conditions were then altered to provide a temperature swing on the surface of the test rod where damage would be more evident. The experimental conditions were: frequency 400 cpm, duty cycle 33%, and average power input 50 kw/in$^3$. Under these conditions a calculated mean stress of 60,000 psi and a "swing" stress of 10,000 psi were applied to the rod.

In the first three runs difficulty was again encountered with the rod melting in the clamp. To prevent this type of failure the velocity of the water inside the clamp chamber was doubled, by reducing the size of the chamber, and the ends of the rods were silver plated. In a temperature calibration run at an average power density of 48 $kw/in^3$ the center temperature remained constant at 408°C while the surface temperature swung from 87 to 119°C. Under these conditions the test rods in two of the most reliable tests failed at 531,000 and 749,000 cycles.

The average power input was then reduced in order to investigate the safe thermal cyclic stresses to which uranium might be subjected. For the initial run a large change in the average power input was not made since it was anticipated that unduly long runs might be encountered. Very little change was noticed in the number of cycles necessary to produce failure of the rod with 43 $kw/in^3$ and 40 $kw/in^3$. Sample B-19 tested at 30 $kw/in^3$ did not fail, however, until 862,120 cycles had been completed. During this test the first crack was noticed at about 16,000 cycles. At 262,000 cycles two large spines appeared and at 284,000 cycles the sample was very rough. As more spines appeared it became apparent that the cross sectional area of the rod was becoming less and, since the power input was held at a constant value, the power density was actually increasing. After 806,920 cycles the power input was decreased in proportion to the change in cross sectional area as measured by the increase in resistance. For example, the resistance at the start of the run was $0.854 \times 10^{-3}$ ohms and after 806,920 cycles it was $1.152 \times 10^{-3}$ ohms. The power density was then reduced to 74% of its original value for the remainder of the test.

Further reduction of the average power to 25 $kw/in^3$ was made for the next test, B-21. The power density was adjusted once per day to allow for the decrease in cross sectional area. Admittedly, the cross sectional area is not reduced the same amount all along the rod, but a correction in power input would at least tend to hold the power density constant. When the electrical resistance had increased by a factor of 3.85 further operation did not seem practical and the run was terminated after 2,134,800 cycles. The increase in resistance more than doubled during 40,000 cycles. The sample was very rough and badly splintered at the end of the run, Figure 11.

An insufficient number of runs was made to determine with confidence the endurance limit for the alpha-rolled uranium rods. These exploratory runs indicate, however, that an average power input of between 25 and 30 $kw/in^3$ bracket the value which, under the cycling conditions used, gives a mean stress of 30,000 to 35,000 psi and a stress swing of 4000 to 4600 psi.

## Testing of Other Metals

Group VI. Test rods of thorium, zirconium, and carbon steel were also tested in the resistance cycler. These materials are of interest because of their possible use in reactors.

The first thorium sample was tested under the helium-cooled conditions of Group II. The sample was cycled between 100 and 500°C for 1484 cycles without dimensional change or warping. These had been the conditions which produced 12% elongation and severe warping in an alpha-rolled uranium rod.

One rod each of thorium and zirconium were tested with water cooling under conditions similar to those used in Group III, above. In the Group III series it had been shown that stress failure occurred in alpha-rolled uranium after a few thousand cycles with a center temperature swing from 100 to 500°C.

The maximum power density input to the zirconium rod was 44 kw/in$^3$. As a check on the current and voltage measurements the electrical conductivity of zirconium was calculated from experimental data; the value obtained, 54 x $10^{-6}$ ohm-cm at 57°C, compares with the value 51 x $10^{-6}$ ohm-cm found in the literature. After the test, the zirconium specimen was lightly tarnished and very slightly warped, but no evidence of failure was noticed. A summary of the test conditions follows:

| Center Temp Limits, °C | Surface Temp Limits, °C | Power Density kw/in$^3$ | No. of Cycles | Av. Resistance ohms// 4 1/2" |
|---|---|---|---|---|
| 400-62 | 72-53 | 22.6 | 3058 | 3.07 x $10^{-3}$ |
| 500-62 | * | 29.6 | 6072 | 3.22 x $10^{-3}$ |
| 600-62 | * | 43.8 | 9102 | 3.33 x $10^{-3}$ |

* Surface thermocouples broke off early in the run.

The second thorium rod was tested at a power density of 37 kw/in$^3$ and failed after 8596 cycles. The failure occurred at a hole drilled through the rod for a center thermocouple. The rod exhibited short, narrow cracks radiating from all of the holes drilled in the test section. No other cracks were noticed but the rod was slightly corroded, particularly near the holes. The center thermocouple failed early in the test. Data taken as the power was being increased gave a center temperature of 300°C at 50 kw/in$^3$ peak power input. It is estimated that the peak center temperature was 400°C at an average power input of 37 kw/in$^3$.

A zirconium-clad thorium rod having a uniform diameter of 3/8" and zirconium cladding 0.020" thick was then tested in the apparatus under the same cycling conditions as mentioned above. It was not possible, however, to attain an average power density of over 8.3 $kw/in^3$ because of the greater conductivity of the rod. After 11,470 cycles the rod was removed from the apparatus for inspection and no visible damage was noted.

A carbon steel sample containing 0.17% carbon was cycled at the rate of 30 cpm with a 50% duty cycle at a power density of 26 $kw/in^3$. After 36,543 cycles the rod was removed for inspection and no cracks were visible. The center temperature swung from 317 to 68°C and the surface temperature swung from 153 to 59°C. Further testing was limited to uranium rods.

## SUMMARY AND CONCLUSIONS

An apparatus was designed, built, and operated successfully for thermal cycling metal rods. The testing equipment is of particular interest because of the wide range of cycling conditions which can be produced. The cycling rates are much higher than those obtainable with the cyclers which depend upon alternate heating and cooling by immersion in liquid-metal baths. With water cooling it is possible to investigate a wide range of cycling rates with high temperature gradients in the metal, although high temperature swings and a high base temperature cannot be obtained simultaneously because of the physical properties of the coolant. If the work was of sufficient importance, however, this disadvantage could be partly overcome by operating a high-pressure water recirculating system.

When gas is used as a coolant slow cycling, with a low gradient and large temperature swings, is possible. Installation of a gas compressor and heat exchangers and a recirculating system operating at 50 psig with a flow rate of 110 cfm at standard conditions would allow a maximum of thirty cpm with a temperature swing of 100 to 500°C. Faster cycling rates could be obtained with gas cooling if a temperature swing of only 50 to 100°C were acceptable.

Although no other coolants were tested with the present equipment it is probable that an oil coolant could be used to an advantage. Higher average temperatures could be obtained than with water, and larger temperature swings would be possible than with either helium or water cooling.

The work performed with the thermal cycler described in this report can be summarized as follows:

1. Cycling of alpha-rolled uranium at 8 cps with a 20% duty cycle and an average power input of 15 kw/in$^3$ produces no elongation and no failures.

2. Elongation and warping of alpha-rolled uranium results when the temperature is cycled at temperatures above 250°C, elongation was 18% at 100-500°C cycling. These results are comparable to findings reported by others.

3. A different type of failure involving either thermal stress or thermal fatigue stresses occurs when uranium rods are subjected to high cyclic thermal stresses.

Suggested experimental work that can be done with the thermal cycler equipment without major alterations include the determination of the endurance limits for annealed alpha-phase rods and for beta-phase rods. On a long-range experimental program the following more basic experiments could be performed:

1. The effect of cycling on powder compacts.

2. The effect on various metals and alloys of the conditions which produce marked growth on alpha-rolled uranium.

3. The effect of cycling on samples of strong preferred orientation (samples taken parallel and perpendicular to direction of rolling).

4. The effect on growth rate when the specimen passes through a phase change on cycling.

5. Study of the physical properties of uranium rods which have been subjected to fast cycling.

## ACKNOWLEDGEMENTS

This project was undertaken in cooperation with the Radiation Laboratory of the University of California*. The resistance cycler was designed by P. J. Charley, who also made some of the earlier tests of uranium rods. J. H. Cupp assisted with the design and construction of the equipment. J. A. Martin made many valuable suggestions for the latter part of the testing program. All specimen rods and tubes used in these tests were prepared by the Metallurgy Division of ORNL. The report was edited by F. T. Howard.

* Contract Work Order No. H-10550.

## APPENDIX A: PARTS LIST FOR PULSED POWER SUPPLY
(See Figure 6)

### Resistors

| | | |
|---|---|---|
| R9, R10 | 2M | 1 watt |
| R14 | 0.1M | 1 watt |
| R17, R18 | 1M | 1 watt |
| R19, R20 | 10K | 10 watt |
| R21, R22 | 0 24M | 1 watt |
| R23 | 5K | 10 watt |
| R26, R28 | 5K | 20 watt |
| R27 | 1.5K | 10 watt |
| R29 | 50K | 2 watt |
| R30, R31 | 5 ohms | 215 watts |

### Capacitors

| | | |
|---|---|---|
| C11, C12 | 1 0 mfd | 1000 V, dc |
| C15, C16 | 0 0001 mfd | 2000 v, dc |
| C17, C18 | 0.25 mfd | 600 v, dc |
| C19, C20 | 0.1 mfd | 600 v, dc |
| C21, C22 | 0.01 mfd | 600 v, dc |
| C23, C24 | 0.0001 mfd | 2000 v, dc |
| C25 | 1.0 mfd | 600 v, dc |

### Transformers

| | |
|---|---|
| T11 | Filament and anode transformer |
| T12 | Anode transformer |
| T13 | Grid transformer |
| T14 | Coupling transformer |
| T15 | Filament transformer |
| T16 | Filament transformer |
| T17 | Power transformer |

### Reactors

| | | |
|---|---|---|
| X11, X12 | 20 henry | 0.025 amp, dc |
| | 600 ohms, dc | 0.75 kv insulation |

### Tubes

| | |
|---|---|
| V11, V12 | 5Y3GT/G |
| V13, V14, V15 | VR105-30 |
| V17, V18 | 2050 |
| V19, V20 | FG172 |
| V21, V22 | FG238 |

### Potentiometers

| | | |
|---|---|---|
| Power adjustment | 30,000 ohms | 5 watt |

TABLE I

APPENDIX B: SUMMARY OF TESTS WITH PULSED PROTONS

| Test | Coolant Temp. °C | Cycles | Remarks |
|---|---|---|---|
| U-1 | 30 | $1 \times 10^6$ | Run not completed. |
| U-2 | 30 | $4 \times 10^6$ | Some melting. Hairlike structure inside the tube. |
| U-3 | 30 | $10^7$ | Blister formation |
| U-4 | 30 | steady beam | Sample melted badly |
| U-5 | 30 | $10^7$ | Slightly corroded |
| U-6 | 30 | $8.6 \times 10^6$ | No change |
| U-7 | 80 | $6 \times 10^6$ | Ruptured |
| U-8 | 80 | $4 \times 10^6$ | Ruptured |
| U-9 | 80 | $8.2 \times 10^6$ | Ruptured |
| U-10 | 80 | $5.4 \times 10^6$ | Surface blister Hole in wall. |
| U-11 | 80 | $2 \times 10^3$ (30 sec on, 30 sec off) | No measurable change. Slight corrosion. |
| U-12 | 80 | $7.4 \times 10^6$ | Thermocouples show 380° surface temperature melt. No swing. |
| U-13 | 80 | $7.1 \times 10^6$ | Corrosion from inside out, produced surface pin holes. |
| U-15 | 80 | $8.7 \times 10^6$ | Slight corrosion inside tube |
| U-16 | 80 | $6.1 \times 10^6$ | Surface blister. Hole in wall. |
| Stainless-1 | 30 | $5 \times 10^6$ | Sample badly melted. |
| Stainless-2 | 30 | $5 \times 10^6$ | No change. |
| Stainless-3 | 30 | $5 \times 10^6$ | " " |
| Thorium-1 | 30 | $10^7$ | " " |
| Thorium-2 | 30 | $10^7$ | " " |
| Thorium-3 | 30 | $10^7$ | " " |
| Thorium-4 | 30 | $10^7$ | " " |
| Thorium-5 | 80 | $10^7$ | " " |
| Thorium-6 | 80 | $7\ 5 \times 10^6$ | " " |
| Aluminum-1 | 30 | $5 \times 10^6$ | " " |

The first 12 uranium specimens were alpha-rolled uranium Tubes 13, 15, and 16 were alpha rolled and fast β-heat treated

APPENDIX C: GROUP I TESTS
(All tests at 480 cpm and 20% duty cycle)

| Test No. | Water Flow | Av. Power Density ($kw/in^3$) | Cycles | Comments |
|---|---|---|---|---|
| U-1 | 11.2 gpm<br>20 fps | 11.2 | $2.7 \times 10^5$ | Melted in fixed clamp. |
| U-2 | 11.2 gpm<br>20 fps | 15 | $3.7 \times 10^5$ | Test terminated. |
| U-3 | 5.6 gpm<br>10.8 fps | 15 | $5.8 \times 10^4$ | Failed in fixed clamp. |
| U-4 | See comment | 15 | $3.9 \times 10^5$ | Failed after 115,000 cycles at 11.2 gpm and 275,000 cycles at 6 gpm. |
| U-5 | -<br>10 fps | 15 | $5.3 \times 10^4$ | Failed in fixed clamp. Severe surface boiling. Rod tension loaded 700 psi. |

## APPENDIX D. GROUP II TESTS

| Test No. | Helium Flow (cfm) | Av. Power Density* ($kw/in^3$) | Cycling | Center Temp (°C) | Total Cycles | Comments |
|---|---|---|---|---|---|---|
| U-6 | 6 | 2.8 | 3-4/min<br>4-3 sec, each<br>20% duty cycle | 125-150 | 746 | Elongation 2.2%, warped and twisted. |
| U-7 | 1.6 | 2.3 | 1.7/min<br>2.6 sec<br>7.5% duty cycle | 100-500 | 1253 | Elongation 13%, warped and twisted. |
| U-9 | 1.5 | 2.3 | 4.8/min<br>1.5 sec<br>12% duty cycle | 250-500 | 1624 | Elongation 6.8%. Rod initially faulty. |
| U-10 | 1.5 | 3.9 | 2.8/min<br>2.1 sec<br>10% duty cycle | 100-250 | 1446 | No elongation, very little oxides. |
| U-11 | 3.0 | 2.5 | 3.4/min<br>2 sec<br>11.2 % duty cycle | 100-500 | 1113 | Total elongation 18%, badly warped. |
| U-12 | 3.0 | 2.5 | 3.4/min<br>2 sec<br>11.2% duty cycle | 100-500 | 1100 | Total elongation 17%, badly warped. |

* Average power for "on" phase of cycle.

## APPENDIX E. GROUP III TESTS

| Test No. | Water Flow | Av. Power Density ($kw/in^3$) | Pulsing Rate, Length, and Duty Cycle | Temperature (°C) Center | Temperature (°C) Surface | Total Cycles | Comments |
|---|---|---|---|---|---|---|---|
| A-1 | 9.8 gpm<br>15.8 fps | -<br>56 2 | 480/min<br>None | 250<br>486 | 58-70<br>110 | $1.7 \times 10^4$<br>2.1 hr | Constant power applied after $1.7 \times 10^4$ cycles. Failed near center. |
| A-2 | 9 8 gpm<br>15.8 fps | 20.8 | 30/min<br>1 sec<br>50% | 102-486 | 50-127 | $1.5 \times 10^3$ | Failed near end. First crack at 450 cycles. Deep and ragged cracks. |
| A-3 | 6.2 gpm<br>10 fps | 8 | 480/min<br>0.025 sec<br>20% | 330-32 | 89-110 | $1 \times 10^5$ | Failed near center; two large cracks. |
| A-4 | 9.8 gpm<br>15.8 fps | -- | 30/min<br>1 sec<br>50% | 112-486 | 50-106 | $9 \times 10^3$ | First crack at 1500 cycles. Failed about 2" from clamp. |
| A-5 | 10 gpm<br>16.1 fps | Varied | 30/min<br>1 sec<br>50% | Varied | Varied | | Calibration test, incipient surface boiling at 300°C, slight surface boiling at 350°C; heavy surface boiling at 400°C. |
| A-6 | - | 26.1 | 30/min<br>1 sec<br>50% | 500 | 100 | $9.2 \times 10^3$ | Smooth rod, copper coated. Failed near fixed clamp. First crack at 5400 cycles. Large cracks. |
| A-7 | 10 gpm<br>16.1 fps | 26.1 | 15/min<br>2 sec<br>50% | 500 | 100 | 600 | Rod flash-coated with copper. First crack at 600 cycles. Terminated after making power measurements. |
| A-8 | 10 gpm<br>16.1 fps | 26.1 | None | 500 | - | - | Half of rod flash-coated with copper. Uncoated half smoother at end of test. Failed near end in 1.5 hours. |
| A-9 | 10 gpm<br>16.1 fps | 26.1 | 30/min<br>1 sec<br>50% | 500 | 100 | $4.35 \times 10^3$ | No holes in rod. First crack at 3600 cycles. Failed near end. Large cracks. |

APPENDIX F: GROUP IV TESTS
(All tests at 2400 cpm, 33.3% duty cycle,
and with a cooling water flow of 11 gpm or 17.7 fps.)

| Test No. | Av. Power Density ($kw/in^3$) | Temperature ($^oC$) | Total Cycles | Comments |
|---|---|---|---|---|
| B-1 | 25.2 | | $1.00 \times 10^6$ | First crack noted at 640,000 cycles. |
| | 49.8 | | $4.70 \times 10^5$ | Rod failed near end. |
| B-2 | 49.8 | Cen 370<br>Sur 94 | $7.46 \times 10^5$ | First crack noted at 278,000 cycles. Failed near end. |
| B-3 | 50.3 | | $1.51 \times 10^6$ | First crack noted at 264,000 cycles. Failed at entrance to glass viewing tube next to end. |
| B-4 | 47.0 | | $2.36 \times 10^6$ | First crack noted 163,000 cycles. Failed near end. |
| B-5 | 47.0 | | $7.37 \times 10^5$ | Power load increased at end to demonstrate failure. |

## APPENDIX G: GROUP V TESTS

(All tests at 400 cpm, 33 3% duty cycle, and with a cooling water flow of 11 gpm or 17.7 fps.)

| Test No. | Av Power Density ($kw/in^3$) | Temperature, ($^oC$) | Total Cycles | Comments |
|---|---|---|---|---|
| B-6 | 46 8 | | $3.97 \times 10^5$ | First crack noted at 65,000 cycles. Rod failed in fixed clamp. |
| B-7 | 51.8 | | $4.45 \times 10^5$ | First crack noted at 63,000 cycles. Rod failed inside fixed clamp. |
| B-9 | 48 9 | Cen 408<br>Sur 87-119 | $9.37 \times 10^4$ | Rod failed at a TC hole |
| B-12 | 48.0 | | $7.49 \times 10^5$ | First crack noted at 66,900 cycles Failed near center. |
| B-14 | 51.8 | | $2.34 \times 10^5$ | Rod failed at pit made by plating current. |
| B-15 | 44.9 | | $2.17 \times 10^5$ | First crack noted at 4400 cycles. Rod very rough, failed near middle. |
| B-16 | 43 5 | | $7.10 \times 10^5$ | First crack noted at 18,000 cycles. Rod failed near middle. |
| B-17 | 48.4 | | $5.31 \times 10^5$ | Several cracks noted at 26,000 cycles. Rod failed near middle. |
| B-18 | 40.0 | | $5.27 \times 10^5$ | First crack noted at 24,000 cycles. Failed near middle. |
| B-19 | 30.0 | | $8.62 \times 10^5$ | Spines appeared at 262,000 cycles. Rod was badly splintered but did not melt in two. |
| B-20 | 47.5 | | $1.39 \times 10^5$ | First crack noted at 15,000 cycles. Failed near middle after becoming badly splintered. |
| B-21 | 25 | | $2.13 \times 10^6$ | Power reduced at start of each shift to keep power density approximately constant (see text). Rod did not melt but was badly splintered. |
| B-22 | 30 | | $3.08 \times 10^6$ | Power density held constant by reducing input. Rod failed in clamp |
| B-24 | 35 | | $6.42 \times 10^5$ | Power density held constant. First cracks noted at 16,000 cycles. Test terminated. |

## APPENDIX H. GROUP VI TESTS

| Test No. | Av. Power Density ($kw/in^3$) | Temperature ($^oC$) | Total Cycles | Comments |
|---|---|---|---|---|
| Th-1 | 2.3 | 100-500 | $1.5 \times 10^3$ | No elongation, no visible oxides. |
| Zr | 22 6 | Cen 62-400<br>Sur 53-72 | $3.1 \times 10^3$ | Surface smooth after 18,232 cycles. Test terminated. |
| | 29.6 | Cen 62-500 | $6.1 \times 10^3$ | |
| | 43.8 | Sur 62-600 | $9.1 \times 10^3$ | |
| Th-2 | 37.3 | - | $8.6 \times 10^3$ | TC failed. Rod failed at TC hole. |
| Th-Zr | 8.3 | - | $1.15 \times 10^4$ | Claddant not affected by test Test terminated. |
| S-1 | 26.1 | Cen 68-317<br>Sur 59-153 | $3.65 \times 10^4$ | Surface unmarred by test. Test terminated. |