SECRET
SECURITY INFORMATION

ORNL-1352

101-A

DECLASSIFIED

CENTRAL RESEARCH LIBRARY
DOCUMENT COLLECTION

CLASSIFICATION CHANGED TO:
BY AUTHORITY OF: TID-1116
BY: K. Page 10/26/56

MARTIN MARIETTA ENERGY SYSTEMS LIBRARIES
3 4456 0353162 1

LABORATORY RECORDS
1954

INV
55

PROTECTIVE EQUIPMENT EVALUATION PROGRAM

QUARTERLY PROGRESS REPORT

JULY 1, 1951 to SEPTEMBER 30, 1951

CENTRAL RESEARCH LIBRARY
DOCUMENT COLLECTION

LIBRARY LOAN COPY

DO NOT TRANSFER TO ANOTHER PERSON

If you wish someone else to see this document, send in name with document and the library will arrange a loan.

OAK RIDGE NATIONAL LABORATORY
OPERATED BY
CARBIDE AND CARBON CHEMICALS COMPANY
A DIVISION OF UNION CARBIDE AND CARBON CORPORATION
OAK RIDGE, TENNESSEE

RESTRICTED DATA

This document contains restricted data as defined in the Atomic Energy Act of 1946. Its transmittal or the disclosure of its contents in any manner to an unauthorized person is prohibited.

SECRET
SECURITY INFORMATION

[redacted]

Index No ORNL-1352
This document contains 45 pages
This is copy 101 of 191 Series A

Subject Category Physics and Mathematics

QUARTERLY PROGRESS REPORT

July 1 1951 to September 30 1951

August 6 1952

PROTECTIVE EQUIPMENT EVALUATION PROGRAM
(In Cooperation with the Army Chemical Corps)
E G Struxness Group Leader

[redacted]

OAK RIDGE NATIONAL LABORATORY
Operated by
CARBIDE AND CARBON CHEMICALS COMPANY
A Division of Union Carbide and Carbon Corporation
Oak Ridge, Tennessee

Contract No W-7405-eng-26

3 4456 0353162 1

[redacted]

[redacted]

TABLE OF CONTENTS

	Page No
AEROSOL GENERATION	5
Liquid Aerosols	5
Temperature Control	5
Air Flow Control	5
NaCl Nuclei Source	6
Solid Aerosols	6
PENETRATION STUDIES	12
Preliminary Studies	12
Servo-Owl and Particle Size Controller Servomechanism	13
DOP Servo Controller	16
Servo Owl	19
Future Investigation	24
Conclusions	27
PARTICLE SIZE MEASUREMENT	28
The Diffusion Battery	28
Introduction	28
Principle of Operation	28
Historical	29
Plan of Investigation	30
Preliminary Experiments	30
An Electrostatic Precipitator for the Determination of the Particle Size Distribution of Smokes	36
Principles of Design	36
Theory of Operation	37
Preliminary Investigation	40
Current Investigations	40
APPENDIX I	45
Analytical Methods	45

[redacted]

AEROSOL GENERATION

Liquid Aerosols (F A Hudman)

Several problems that must be understood in order to obtain a monodisperse aerosol with the LaMer-Sinclair aerosol generator have been studied during this period An aerosol of high uniformity of particle size with particles less than 0 1 micron in diameter is required for a really worthwhile study of penetrations through filters This is particularly true when considering air-borne radioactive particles

Temperature Control The aerosol generator is located in a part of the laboratory where the temperature fluctuates rather rapidly and erratically over a range of several degrees In order to minimize the temperature fluctuations caused by the thermoregulators turning the boiler and reheater compartment heaters "on" and "off " the boiler and reheater are each surrounded by one-tenth of a cubic foot of ceramic Berl saddles The continuous and on-off heaters are in the air space surrounding the Berl saddles A small laboratory stirrer has been placed in each compartment to attain more uniformity in temperature within each compartment Consequently the boiler shows temperature fluctuations of about 0 1°C

The effect of room temperature fluctuations on the vapor condensation in the chimney has been minimized by surrounding the chimney with a water jacket There is a half inch dead air space between the chimney and the water jacket Also air entering the boiler and the NaCl nuclei source passes through glass tubing heat exchangers

Air Flow Control An effort has been made to obtain a very steady flow of air through the system Compressed air from the laboratory supply is passed through a pressure regulator a hydrostatic pressure stabilizer and a Chemical Corps Aerosol Canister (M-11) before entering the aerosol generator itself It is thought to be absolutely essential that the temperature and velocity of air at any given point remain constant Originally the generator was made so that at the start of the collection of a sample, all aerosol flow through the generator was momentarily stopped At present the sample to be examined is obtained without disturbing the generation of the aerosol

NaCl Nuclei Source The source of condensation nuclei appears to be unsatisfactory in the present aerosol generator Prof LaMer used a 60 mil nichrome wire to form a coil consisting of 14 turns each turn about one-half inch in diameter This coil after having been dipped in molten NaCl would dissipate three watts with a current flow of three amperes Furthermore, a change in current through the nichrome coil from 3 amperes to 2 95 amperes would cause the particle radius to change from 0 26 micron to 0 48 micron [1]

The coil used in this laboratory was made of 64 mil nichrome wire having a resistance of 0 1648 ohms per foot The wire was wound to form a coil of 14 turns each turn being one-half inch in diameter The coil was submerged in NaCl at about 820°C After dipping the wire had a thin coating of NaCl The same coil was used without recoating for several weeks It was found that relatively large increases in current produced but a small change in the number of nuclei Changes in the number of nuclei were calculated from observed changes in particle size For example, when vaporizing stearic acid at a boiler temperature of 122°C smoke particles in the visible size range were obtained while the voltage across the coil was varied stepwise from 2 0 to 5 6 volts This voltage caused a dissipation of approximately 70 watts in the NaCl coated wire coil

Two aspects of the problem of generating nuclei from NaCl will be studied Freshly prepared NaCl coated coils will be tried because it is possible that the NaCl coat must be maintained with a glass-like surface Also a preliminary experiment indicates that when the coil is at 135°C sufficient nuclei are emitted without the passage of any current through the coil The control of temperature would be a simpler method of controlled nuclei generation

Solid Aerosols (W D Co rell)

Work on methylene blue and the thermal precipitator was suspended during this period and a study was initiated to undertake the design of a monodisperse solid aerosol generator

The general method of approach used was that of generating liquid droplets of a suitable solution and drying the droplets to leave solid particles of the solute This method involves two distinct problems first, that of generating uniform liquid droplets in sufficient numbers to give the desired concentration of particles and secondly, that of drying the

1 LaMer V K AEC Progress Report NYO-512 (March 31 1951)

droplets in such a way as to give uniform solid particles The first i e that of generating liquid droplets is being investigated now The problem of drying will be considered later after droplet generation is farther advanced

Some thought was given to using the method of Vonnegut[2] for generating uniform liquid droplets This method involves vibrating a glass capillary with an air jet at a frequency of $\cong$ 10 000 cps Vonnegut reports that he has successfully used this method for producing uniform water droplets down to 8μ in diameter

Preliminary results here indicate that this method may be satisfactory for small scale laboratory use but that it probably would be difficult to adapt to large scale use for routine testing

A method being investigated here is that of a capillary mounted on a rotating disc The disc is essentially the frustum of a hollow brass cone with the capillary being mounted near the periphery of the base of the cone and with the axis of the capillary making an angle of 90° with the base Figure 1 shows a sectional drawing of the disc with capillary mounted

This disc is mounted so that the axis of the capillary is verticle and is rotated about the axis of the frustum by means of a centrifuge motor The liquid to be used is contained in the hollow frustum and is fed through the capillary by gravitational force plus a component of the centrifugal force due to the rotation of the disc

Figure 2 shows the head assembly mounted on the centrifuge shaft in operating position During operation this assembly is encircled by a lucite shield This allows for visual observation of the droplets and at the same time serves as a safety shield

The glass capillary is mounted by using a hypodermic needle as a holder with the capillary being threaded through the base of the needle and then waxed in with shellac The shank of the needle is turned down in a lathe to provide a slip fit in the hole in the base of the disc This is sealed against leaks by sweating solder around the shank of the needle The needle must be soldered in the disc before the capillary is waxed in, otherwise the heat from the soldering will unseal the capillary and cause leaks

---

2 Vonnegut Bernard and Raymoun Neufauer, Occasional Report No 29, Project Cirrus "Detection and Measurement of Aerosol Particles by use of an Electrically Heated Filament," RL-555, Sept 1 1951

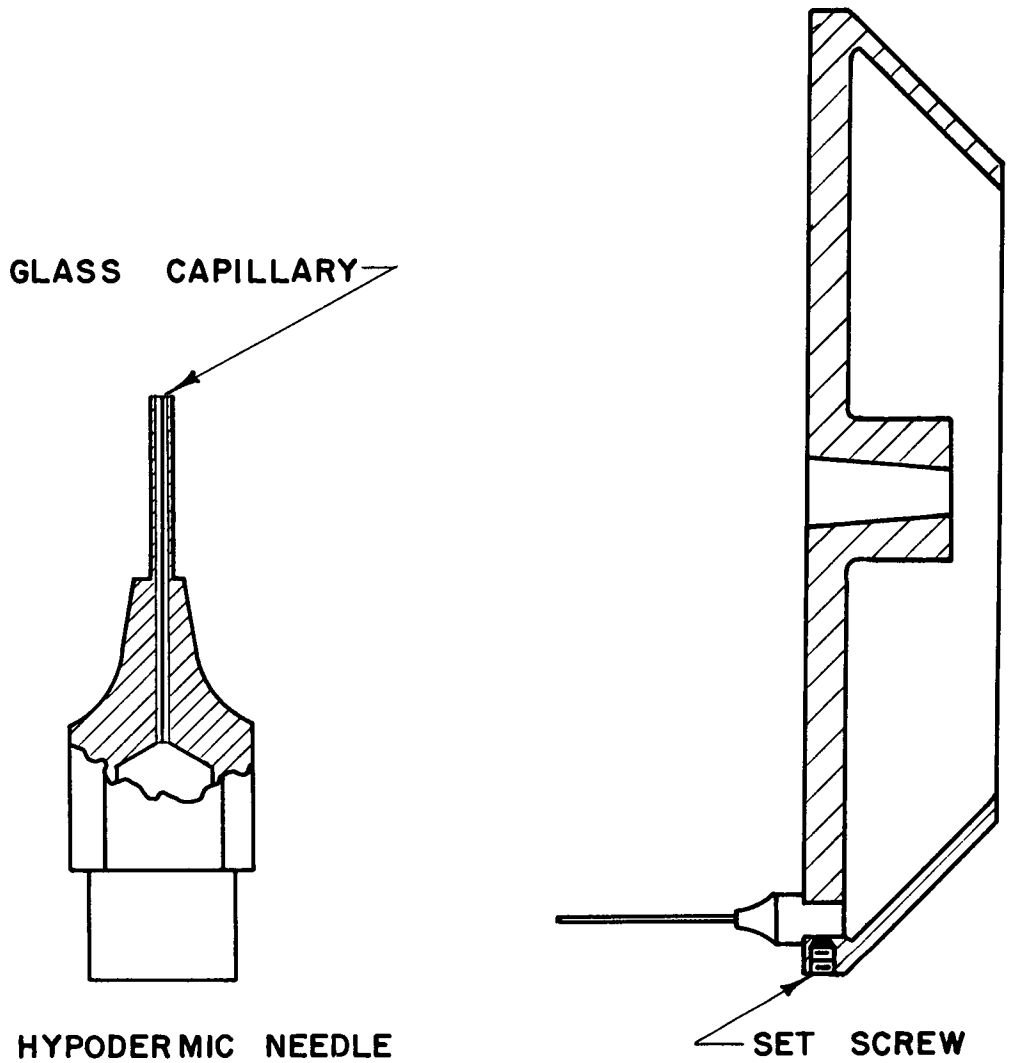

FIGURE I MONODISPERSE AEROSOL GENERATOR

FIGURE 2 MONODISPERSE AEROSOL GENERATOR MOUNTED IN OPERATING POSITION

In addition to solder other substances tried as sealers to effect a seal around the shank of the needle were Glyptal Saurisen cement and shellac None of these substances seem to seal as effectively and as permanently as solder

A Strobotac was used to measure the speed of the rotating disc and to observe the droplet formation on the end of the capillary For the observation of large droplets the Strobotac was adequate but for smaller ones it was necessary to use a white light focused in such a manner that the droplets could be observed as they crossed the beam of white light

The size of the droplets was determined by catching them in oil and measuring them with the aid of a filar micrometer and an optical microscope A solution of methylene blue was used as a test solution for the study of drop formation

Various combinations of capillary sizes and rates of rotation of the disc have been tried in an effort to determine the feasibility of this method of generating aerosols With the present apparatus the smallest capillary used had a bore of 14μ and gave droplets of $\cong$ 60μ ± 20% in diameter when revolved at 5700 rpm

A limiting factor that seems to determine the top speed at which any given capillary may be used is that speed at which the capillary acts as a jet When this happens droplets of more than one size are given off and the purpose of the generator is defeated

Considerable difficulty has been experienced in attempting to keep the disc revolving at a constant speed and in preventing the capillary from vibrating The vibration of the capillary seems to increase with the age of the equipment and is probably due to wear of the shaft on which the disc is mounted

A new disc is being built with modifications which sould eliminate some of the difficulties experienced The new generator will have the capillary mounted radially from the disc instead of perpendicularly as was the case with the old one This should make the capillary less sensitive to vibration than when mounted perpendicularly Also the new capillary holders will screw into the disc instead of being held by solder thus alleviating the trouble with leaks

With this modified generator and by use of the proper combination of capillary bore speed of revolution and concentration of solution it should be possible to generate solid aerosol particles over a large range of particle sizes

If this type of generator proves to be feasible, the problem of drying will be investigated and the two will be combined in an attempt to form a monodisperse solid aerosol generator

While the design of this monodisperse aerosol generator is still in the developmental stage the initial results are promising enough to warrant further investigation

PENETRATION STUDIES

Preliminary Studies (E E Grassel)

In order to develop the techniques necessary for forming controlling measuring and handling small particle aerosols to be used in penetration studies, it was decided to start with a particle size of approximately 0 3μ in diameter and then to extend the applicability of the techniques and equipment to produce particle sizes in the desired range of 0 1μ and smaller A standard dioctyl phthalate (DOP) smoke generator[3] was selected as a source of particles for the investigations in the 0 3μ region By the addition of the servo-owl being developed in this laboratory it is hoped that smoke of this machine can be produced and controlled independent of room conditions The servo-controlled DOP machine should produce smoke particles constant in size and controllable over a small range of sizes

This equipment will be used in some preliminary studies of the effect of particle size and flow rates on penetration of filter paper It will also be used to furnish an aerosol for checking the diffusion battery method of measuring particle size as against the light scattering method [4] Use of the diffusion battery for measuring particle size will be extended into the region where the particles become so small that 90° light scattering techniques become difficult

A standard DOP smoke generator was assembled in a hood and a constant temperature water bath added to control the incoming air supply Another modification was included in the addition of a boiler stirrer as used on similar machines at the Army Chemical Center and the Naval Research Laboratories The stirrer will aid in maintaining the liquid at a constant temperature It should also eliminate localized hot spots

With the use of an NRL smoke penetration meter[5] data were taken on various particle size smokes passing through varying thicknesses of CWS number 5 filter paper Plotting these results on semi-log graph paper showing per cent penetration versus thickness of filter paper curves were drawn connecting all experimental points for a given particle size on a given day These curves were found to be straight lines passing through

---

3 C W S Directive No 334 Edgewood Arsenal, Md May 19 1946

4 LaMer V K , "Studies on Filtration of Monodisperse Aerosols " AEC Contract at (30-1) - 651 NYO-512 June 1951

5 Knudson H W and L White, Naval Research Laboratory Report No P-2642 Sept 14 1945

all points from the first thickness on but when the lines were extended to zero thickness they seldom passed through 100% penetration as can be seen in Figure 3 Figure 4 is a plot of the results taken on different days of the same particle size again showing straight lines, but with different slopes These straight line curves indicate that the aerosol is homogeneous after it has penetrated the first filter paper

These discrepancies were thought to be due to the temperature at which the particles reach equilibrium To obtain the same particle size on different days under varying room conditions it was necessary to change reheater temperatures The change in reheater temperature gives a change in quenching temperature which affects the particle concentration in the smoke For different particle concentrations in an aerosol there are varying coagulation rates giving a shift in the ratio of large agglomerates to small particles A small shift in this ratio may produce a large shift in effective particle size as measured with the Owl

This interpretation of the experimental curves led to the placement of one sheet of CWS number 5 filter paper in the aerosol line between the settling chamber and the paper holder

Servo-Owl and Particle Size Controller Servomechanism (R L Bradshaw)

Since it was felt that the present DOP apparatus was one of the most reliable available generators of a fairly homogeneous liquid aerosol and that much of the preliminary work on the program could be done with the aid of this generator it was important that there be close control of the apparatus The particle size output of the generator is subject to drifts due to line voltage, temperature, and other changes, which make it necessary that the operator keep a close check on the particle size while conducting penetration tests

The answer to this problem seemed to be the use of a servomechanism type of regulator [6] This type regulator, commonly abbreviated "servo," has several advantages

1 Particle size output may be easily changed by the manipulation of one control i e the operator may select any desired particle size within the range of the DOP machine, merely by turning a knob

2 The theoretical steady-state error between the desired and the actual particle size is zero

---

6 Brown Gordon S and Donald P Campbell Principles of Servomechanisms, New York John Wiley and Sons 1948 Chapter One

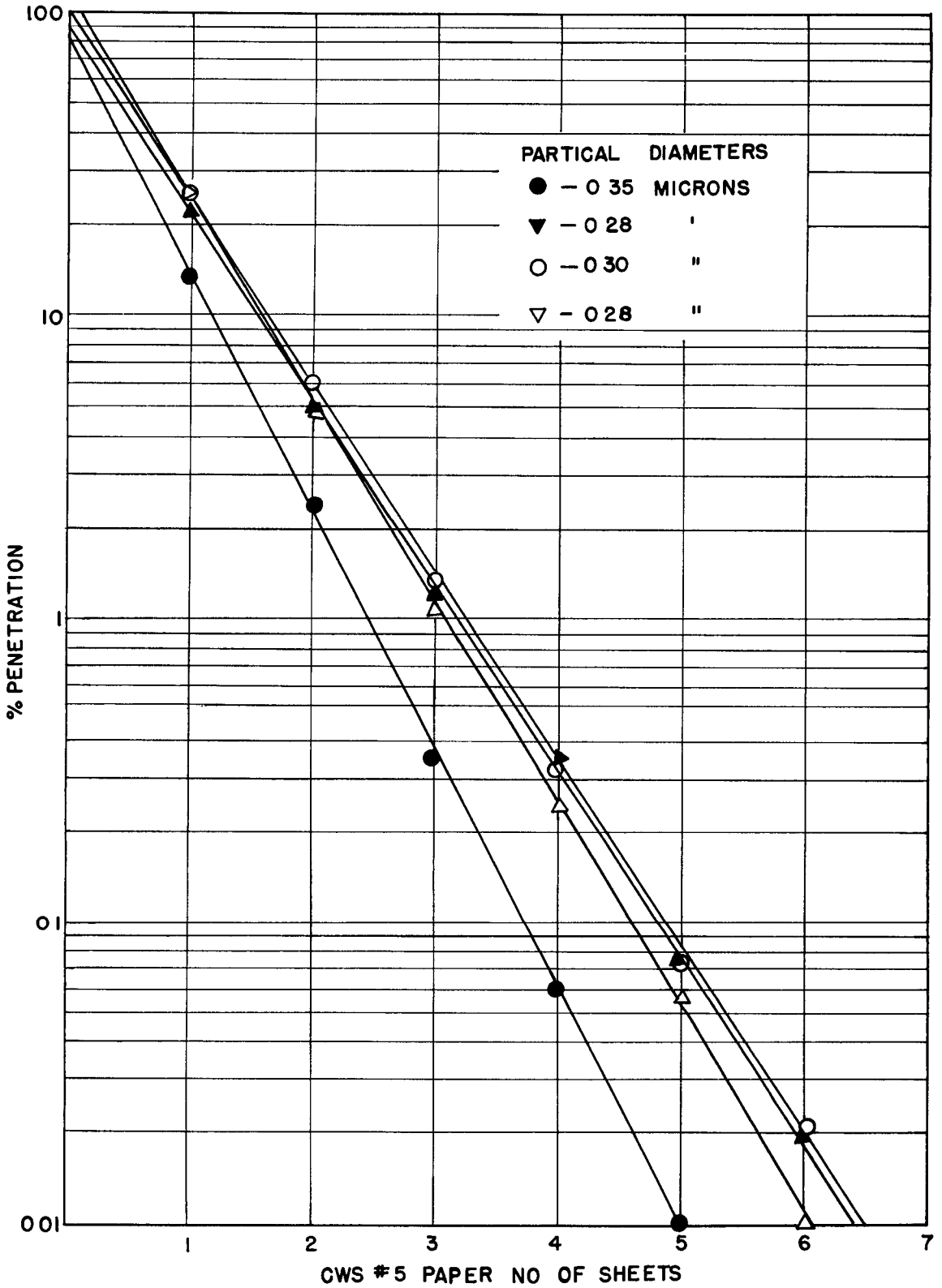

FIGURE 3 PENETRATION CURVES INDICATING HOMOGENEITY OF DOP AEROSOL

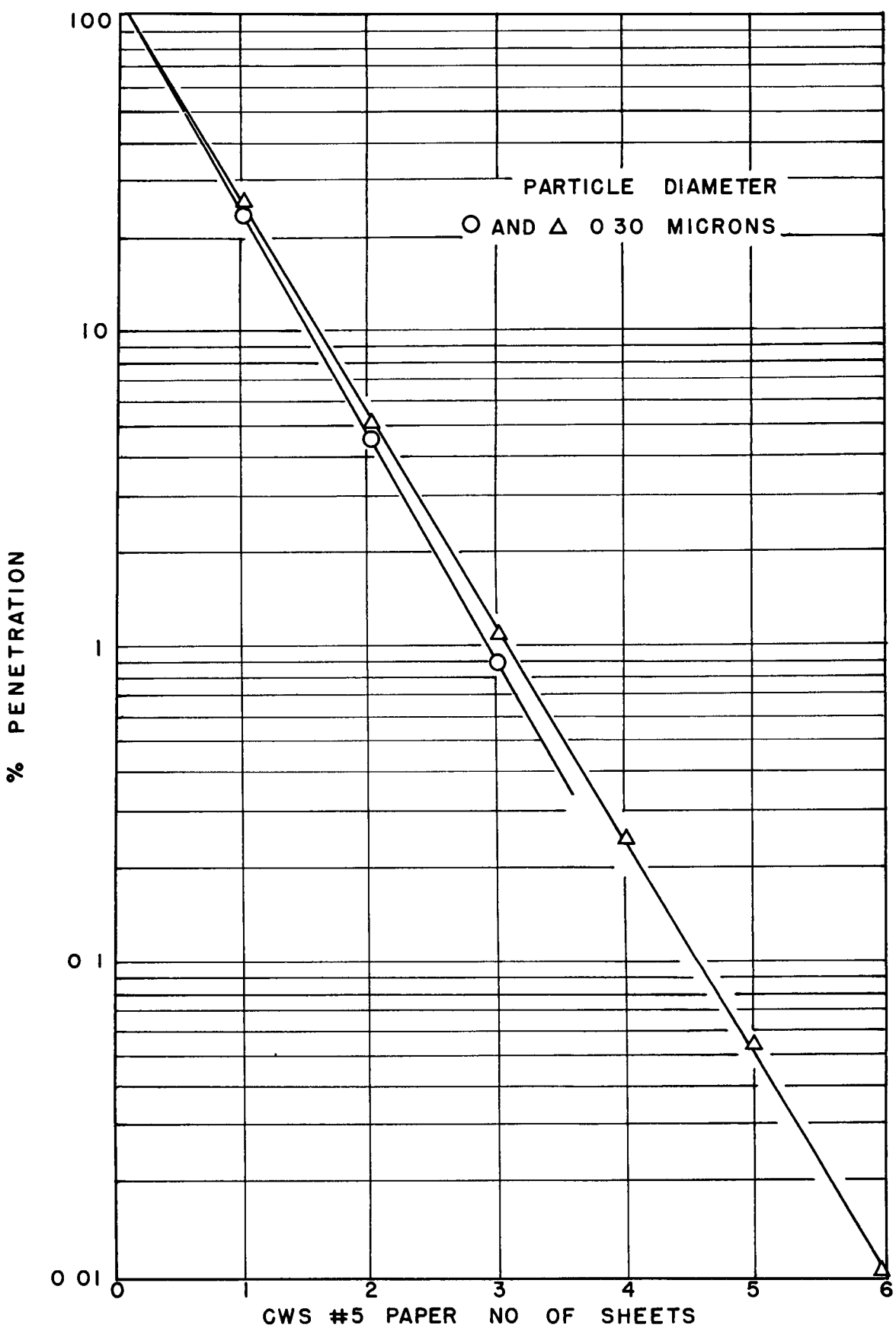

FIGURE 4 PENETRATION CURVES INDICATING HOMOGENEITY OF D O P AEROSOL

3 The response of the DOP generator to a change of command may be speeded up considerably

DOP Servo Controller At present the DOP Servo is incomplete due to the fact that one of the main components the "Servo Owl " which will be described later has not been available However the Servo Owl is now nearly ready and construction will start on the DOP Servo It is hoped that the completion of this piece of equipment may be recorded in the next report

1 Principles of Operation Figure 5 is a block diagram of the DOP Servo, showing the major components which will be included in the loop according to present plans The error detector consists of two potentiometers connected as a differencing circuit the output from which feeds into the compensating network which serves to stabilize and improve the response of the system This network feeds into a Brown Amplifier which drives a small, two-phase, induction motor [7] Coupled to the motor is a variac which supplies the voltage to the air-reheater on the DOP apparatus Particles whose size is controlled by the heater voltage, are fed into the Servo Owl which actuates the output potentiometer of the error detector

In actual operation the operator will set a dial (the input potentiometer of the error detector) to the desired particle size an error signal will be fed through the forward part of the loop such that the heater voltage will be changed in a manner which will tend to correct the output of the DOP generator

During operation of the equipment with the input control set to the desired particle size, if the output particle size drifts slightly due to effects in the DOP apparatus the error signal will cause a large momentary change in the heater voltage thus tending to correct the error rapidly

In Figure 6 may be seen the results of a test run on the unmodified DOP apparatus The curves are of output angle (which is a measure of particle size) as measured by the Visual Owl, [8] versus time for a step input of heater voltage From these curves it is apparent that the time required for the output particle size to reach the desired value would be

---

7 The Brown Amplifier is a patented D C to A C Amplifier for use with the two-phase Brown Motor, manufactured by the Brown Instruments Division of Minneapolis - Honeywell Regulator Co Philadelphia Pa

8 Sinclair David, Handbook on Aerosols, Washington D C Atomic Energy Commission 1950 Chapter 8 pp 106-110

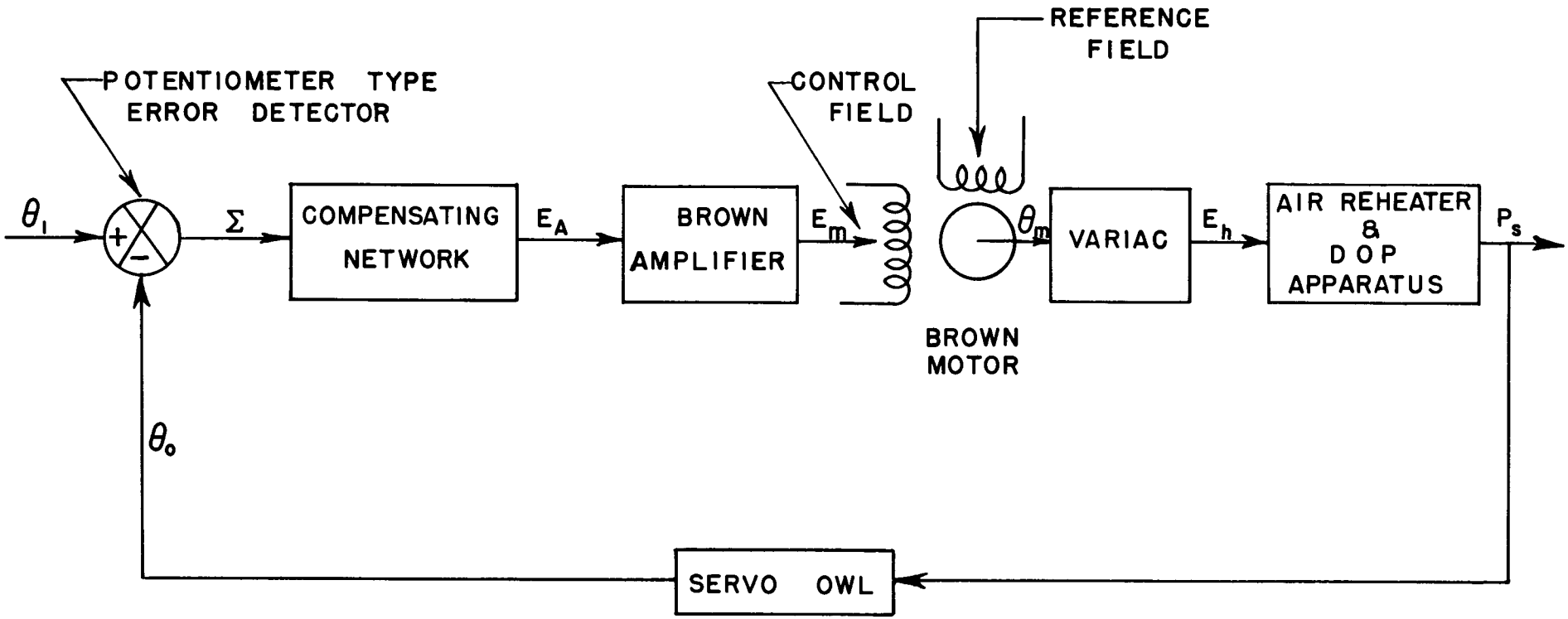

LEGEND

Σ = ERROR VOLTAGE

E_m = CONTROL FIELD VOLTAGE

E_h = REHEATER VOLTAGE

θ_o = OWL ANALYZER ANGLE

E_A = VOLTAGE INPUT TO AMPLIFIER

θ_m = MOTOR SHAFT ANGLE

P_s = OUTPUT PARTICLES

θ_i = INPUT ANGLE

FIGURE 5 BLOCK DIAGRAM OF DOP SERVO

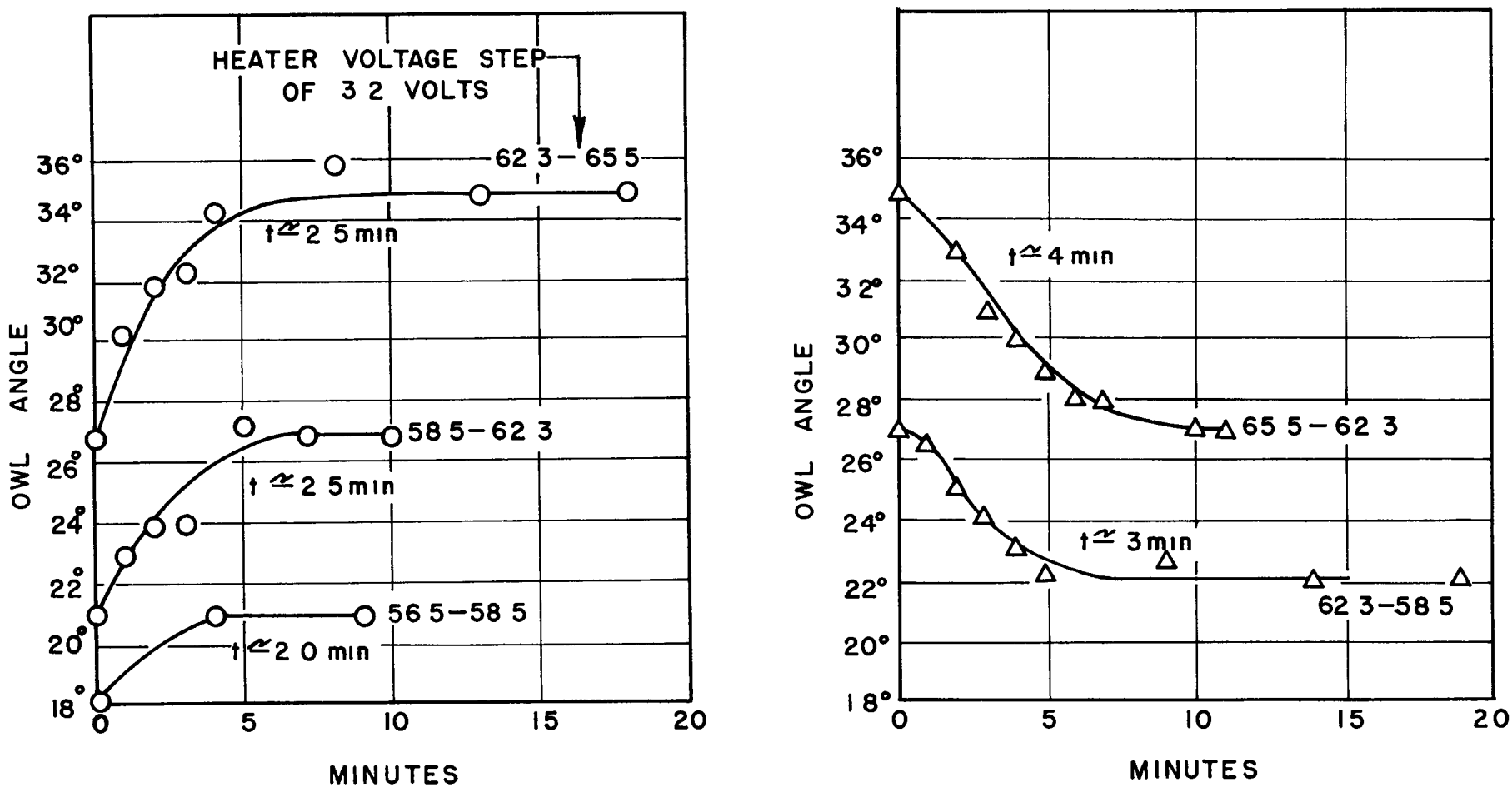

FIGURE 6 RESPONSE OF DOP APPARATUS TO STEP INPUT OF RE-HEATER VOLTAGE

much reduced if the heater voltage was first made much higher (or lower) than that required to maintain this particle size in steady state conditions and then reduced (or raised) at the proper time In effect this is what should be accomplished by servo control thus speeding up the response of the apparatus

Servo Owl In order that DOP particle size may be compared with the desired size it is first necessary to have an accurate method of continuously monitoring particle size Since light scattering methods seemed to be the only available means for continuously monitoring particles within the size range of the DOP generator it was decided to use a modification of the Visual Owl

The Naval Research Laboratory has developed a Photoelectric Owl[9] which seemed to suit the purpose admirably since this Owl was so designed that angular settings of the analyzer could be read to the nearest one-tenth of a degree and engineering drawings were available Prints were obtained of this NRL-M2 Photoelectric Owl and one instrument was built

This Photo Owl then became the heart of the system for particle size measurements on the DOP generator Since the Photo Owl analyzer must indicate the correct particle size at all times a closed loop servo was the natural choice for making the Owl fully automatic

1 Principles of Operation The basic principles of operation of all servomechanisms are the same the major differences being the way in which various effects are achieved

Figure 7 is a block diagram of the Servo Owl The input quantity is of course the output of the DOP generator The output quantity is the angular setting of the Owl analyzers The two phototube outputs are fed into a differencing circuit so that any difference between the analyzer angle and the angle corresponding to the size of the particles being measured shows up as an error voltage This error voltage is amplified and fed to a motor which is coupled to the analyzers through a gear train The motor then runs until the analyzers are brought into a position corresponding to the correct particle size

When the analyzers are properly oriented both phototubes see the same amount of light and there is no error signal to drive the motor If

---

9 Anderson, Wendell L and Joseph K Thompson "Development of NRL Photoelectric Particle Size Meters (Owls) " Naval Research Laboratory NRL Report 3808 May 28, 1951

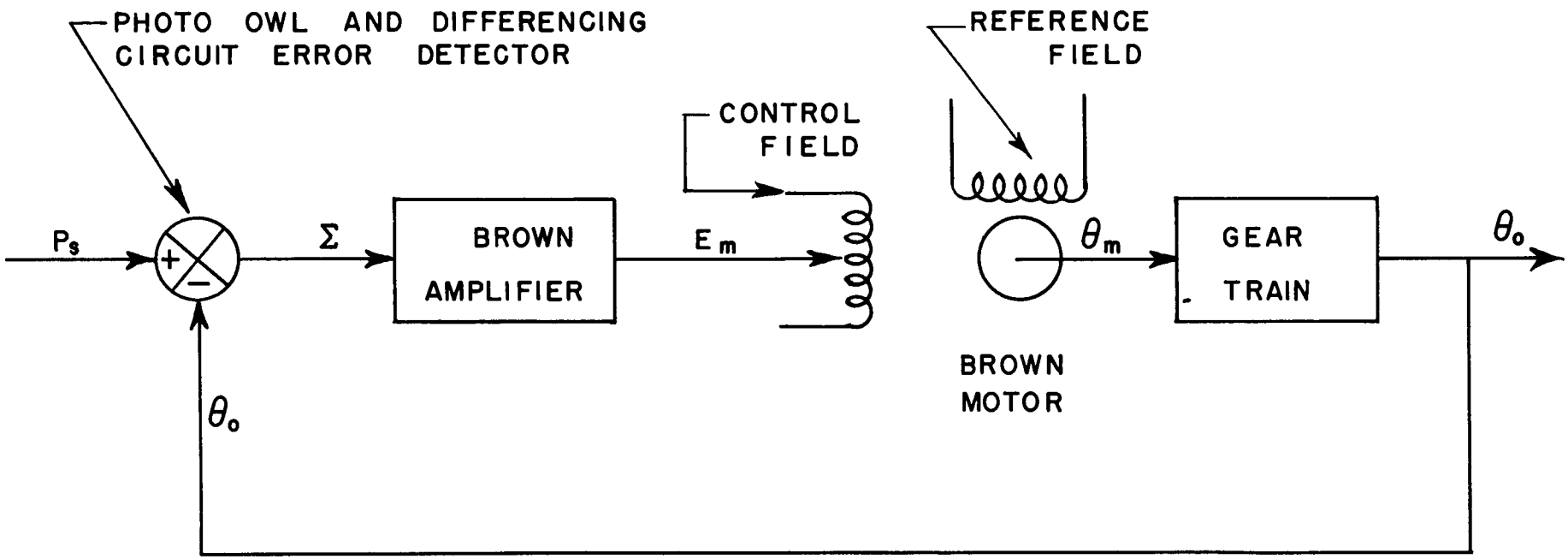

LEGEND

Σ = ERROR VOLTAGE

E_m = CONTROL FIELD VOLTAGE

θ_m = MOTOR SHAFT ANGLE

θ_o = OWL ANALYZER ANGLE

P_s = INPUT PARTICLES

FIGURE 7 BLOCK DIAGRAM OF SERVO OWL

the particle size changes, then the analyzers are no longer in the correct position, the relative amount of light to each phototube changes, an error signal is produced and thereby the analyzers are reoriented so that a balance is again obtained

2 Development At present, the Servo Owl is nearly complete Figure 8 is a picture of the apparatus with all of the component equipment Figure 9 is a rear view of the chassis containing the associated electronic equipment

Progress has been impeded by a variety of technical problems such as drifts in the electronic circuits and non-linearities in both the electronic circuits and the phototubes Stray-signal pickup has also been a major problem, as the Brown Amplifier is sensitive to AC signals of the order of a few micro-volts signals of this level causing saturation and thereby reduced sensitivity to error signals With the amplifier at maximum gain, the Brown Motor will begin running with approximately 2 5 micro-volts at the input of the amplifier from this it may be seen why trouble is experienced due to drifts and non-linearities

3 Results Most of the above mentioned difficulties were solved or at least reduced to a workable level by close voltage regulations shielding etc , until a Servo Owl was obtained In the interest of expediency the performance has not been optimized, but there will be further development in the immediate future

Test results indicate that the Servo Owl, in its present state of development will be usable for aerosols from the maximum range of the Owl[10] down to about twenty degrees (approximately 0 26μ diameter) Within these limits the drift stability is reasonably good One run of approximately two hours length was made at 45° analyzer setting (the natural balance of the analyzers when the standard light is viewed by the phototubes) which showed a good degree of stability the maximum excursion from 45° during this period was approximately one-quarter degree and the duration of these excursions was of the order of three or four seconds maximum However this degree of stability would not be expected for smaller angles since the error signal (volts per degree) will be less at the smaller angles (as explained later), and, therefore, the same circuit drift would cause a much greater change in the analyzer angle at small angles than at large angles

---

10 Sinclair David Handbook on Aerosols Washington, D C Atomic Energy Commission, 1950, Chapter 8 pp 106-110

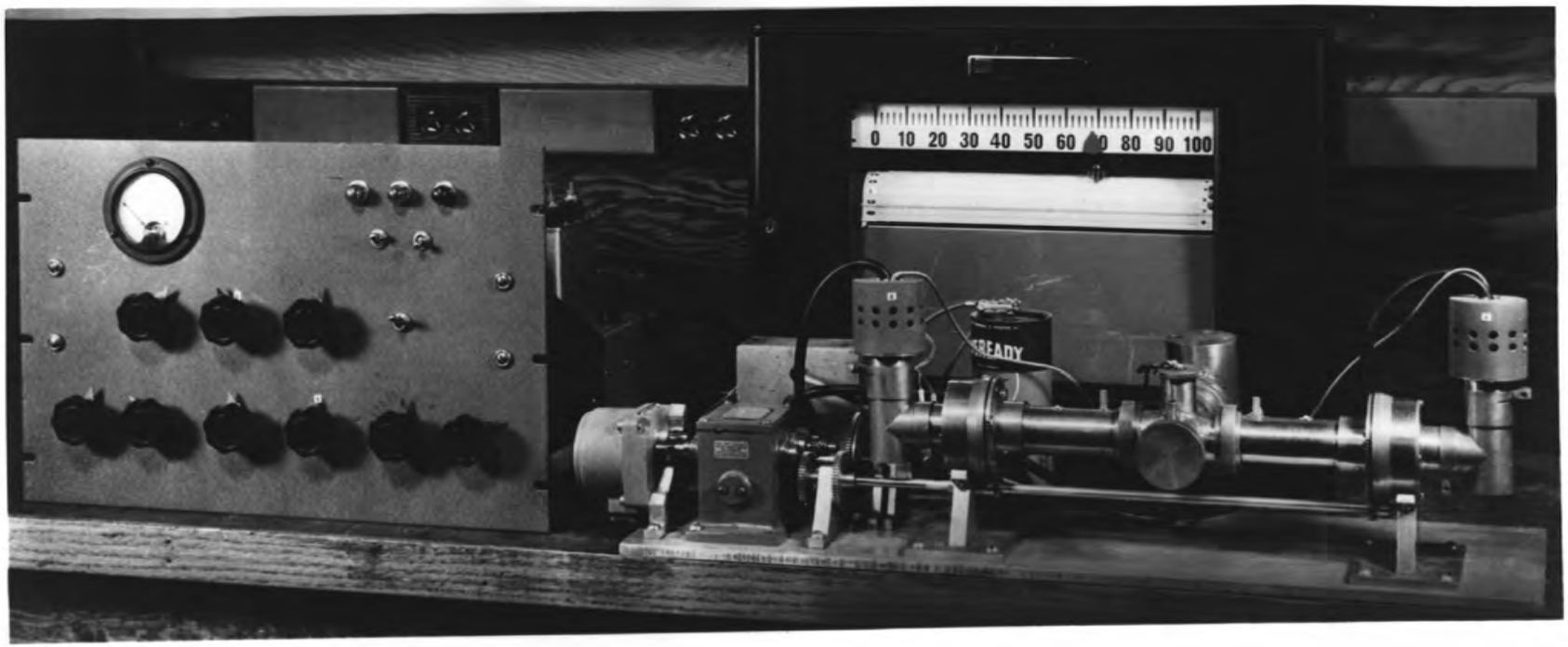

FIGURE 8 COMPLETE SERVO OWL APPARATUS

FIGURE 9 SERVO OWL ELECTRONIC CHASSIS

The speed of response to a step input in the present Servo Owl is limited by the characteristics of the motor and gear train to 1 16 degrees per second It seems probable that this response will be fast enough for its use in the DOP Servo

Future Investigation

1 Increased Light Several of the shortcomings of the Servo Owl mentioned before and the need for extending its use to smaller particles make it desirable to do further development work

Much of the trouble due to drifts and non-linearities can be corrected merely by obtaining or collecting more scattered light from the particles While it is expected that there will be enough light collected from particles of 20° size and larger for usable results, the performance even in this range could be greatly improved by additional light

Aside from the fact that there is a certain minimum of light below which the output from the phototubes will be blanked by noise there is also the fact that the less the light the more the error in analyzer angle readings due to circuit drifts Suppose for instance that at one light intensity there is an error constant of 0 001 volts per degree and a circuit drift of 0 001 volts This will produce an error in analyzer angle reading of one degree Now again suppose that the light intensity can be doubled the error constant will be doubled and the error cut in half or reduced to one-half degree

There are two reasons why the smaller angles are more sensitive to drifts viz , one is due to the fact that the smaller particles give off less light and consequently reduce the error constant and the other is that the error constant is reduced approaching zero for zero angle of the analyzers due to the characteristics of the polarizers and analyzers as explained below

The polarizers in each arm of the Photo Owl are fixed so that their planes of polarization are perpendicular to each other while the analyzers are set so that when the calibrations on the Owl read 0°, their plane of polarization is parallel to one of the polarizers and perpendicular to that of the other From the two sketches below we may derive on expression for the rate of change of relative light intensity seen by each phototube (which is a measure of the error constant) with respect to analyzer angle for any reference analyzer angle

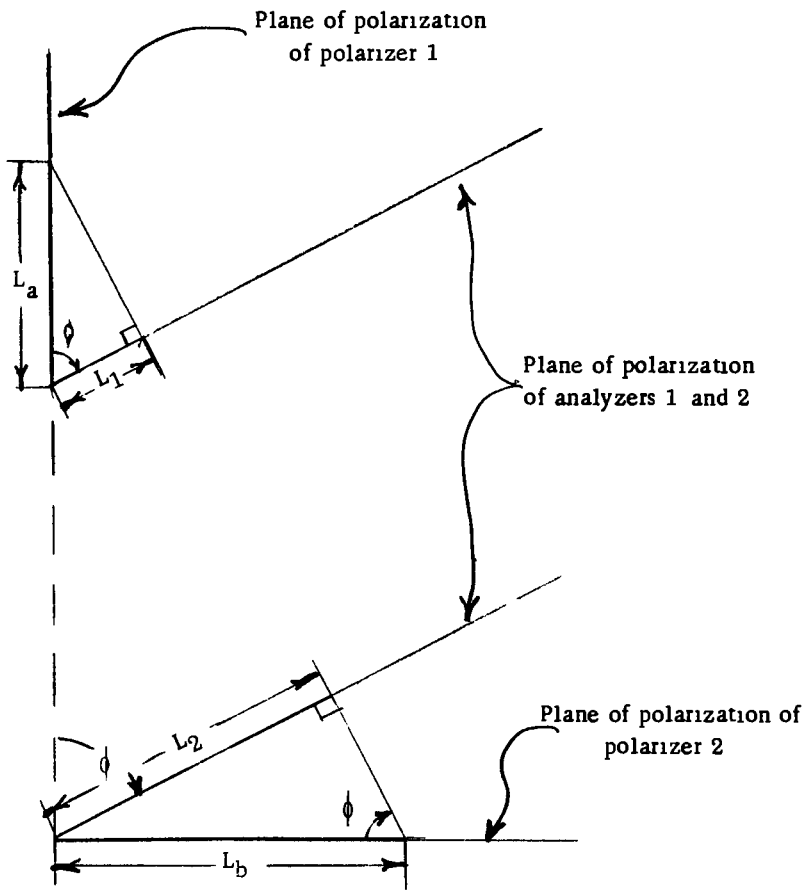

Definitions

L_a = magnitude of light through polarizer 1
L_b = ditto for polarizer 2
ϕ = analyzer angle reading
L_1 = magnitude of light through polarizer 1 and analyzer 1
L_2 = ditto for polarizer 2 and analyzer 2
I_1 = intensity of the light seen by phototube 1
I_2 = ditto for phototube 2

The following indentity establishes the case where the analyzers are in such a position that each phototube has equal illumination, i e the angular reading ϕ, of the analyzers is correct for the particle size under observations

$I_1 = KL_1^2 = I_2 = KL_2^2$

From Sketch $L_1 = L_a \cos \phi$

$L_2 = L_b \sin \phi$

$L_a \cos \phi = L_b \sin \phi$

$L_a = L_b \tan \phi$

The above equation gives the magnitude of the light polarized in one plane in terms of the magnitude of the light polarized in the other plane for the case where each phototube sees the same intensity This will hold for any reference angle ϕ_r

$$I_1 = KL_r^2 \tan^2 \phi_R \cos^2\phi$$
$$I_2 = KL_a^2 \sin^2 \phi$$

The error constant is proportional to the relative changes in light intensity as seen by each tube

$$\text{Error constant} \quad \frac{dI_2}{d\phi} - \frac{dI_1}{d\phi}$$

$$\text{Let} \quad \frac{dI_2}{d\phi} - \frac{dI_1}{d\phi} = \frac{d\epsilon}{d\phi}$$

Remembering that ϕ_R is fixed by the particle size $\frac{d\epsilon}{d\phi}$ is obtained

$$\frac{dI_1}{d\phi} = -2KL_b^2 \tan^2 \phi_R \cos \phi \sin \phi$$

$$\frac{dI_2}{d\phi} = 2KL_b^2 \sin \phi \cos \phi$$

$$\frac{d\epsilon}{d\phi} = 2KL_b^2 \sin \phi \cos \phi \,(1+\tan^2 \phi_F)$$

Below is a table calculated from the above equations from which can be seen that as the angles become smaller the error constant decreases This of course means that the probable error due to drifts will be larger at the smaller angles

TABLE I

(L_b assumed constant)

Owl Angle	Relative $\frac{d\epsilon}{d\phi}$
0°	0
6°	0 052
30°	0 283
45°	0 50
60°	0 86
75°	2 05

It is planned to improve the light collection efficiency and use a monochromatic light source of high intensity in order to alleviate the above mentioned difficulties

2 Redesigned Optical System It may be seen from curves[11] calculated from light scattering theory that the Owl as calibrated by LaMer and Sinclair is inaccurate except in the neighborhood of 30°, due to the fact that the optical system inherently collects scattered light over a solid angle rather than in a plane

It may also be observed that for viewing at 90° to the incident beam with an optical system which covers several degrees of solid angle there may be two particle sizes in the lower regions which will give the same analyzer reading

In order to correct this difficulty it is planned to stop down the optical system to reduce the solid angle and perhaps relocate the arms of the Owl so as to view from some more favorable angle

3 Improved Electronic Circuits At the same time that the Photo Owl is being improved plans are under study for additional refinements in the electronic circuits of the Servo Owl and the construction of another complete unit incorporating these improvements

Conclusions With the favorable completion of the new and improved Servo Owl an important advance will have been made in the measurement and control of the generators of aerosols, from 0 4 microns diameter down to perhaps 0 1 micron diameter

In this report discussion has been in terms of control for the DOP apparatus but the Servo Owl is entirely independent of any particular apparatus and may be used in any application which is adaptable to the use of the Visual Owl The DOP controller servo may also with some modification be used to control other types of generators

---

11 Sinclair, David, Handbook on Aerosols, Washington D C Atomic Energy Commission 1950 Chapter 7 p 86

PARTICLE SIZE MEASUREMENT

The Diffusion Battery (J W Thomas and W Corba)

Introduction Few methods exist for the determination of very small particle sizes LaMer[12] states that it is impossible to detect by direct optical techniques particles smaller than 0 08 micron radius and uses a "growing" technique to extend the light scattering method to particles having radii down to 0 02 microns The electron microscope is very useful for solid smoke particles down to perhaps 0 005 micron radii but the microscope is obviously not adapted to rapid and continuous testing

An alternate method for measurement of very small particle sizes involves the use of a "diffusion battery " Rodebush[13] was probably the first to use the term "diffusion battery" since his apparatus consisted of about 40 rectangular plates packed together, somewhat resembling an automobile battery

The method involves measurement of the diffusion constant of the aerosol and calculation of the particle size from the measured diffusion constant To measure the diffusion constant of an aerosol with the apparatus it is necessary only to know the fraction of the aerosol penetrating the battery and the flow rate, assuming, of course that the battery dimensions are known

Principle of Operation As the aerosol travels through a narrow circular or rectangular channel in streamline flow, those particles near the wall of the channel diffuse over to it and are removed from the air stream This sets up a concentration gradient in the cross section of the channel and the particles then moved by diffusion in the direction of decreasing concentration that is toward the wall and some are eventually removed from the air stream The rate at which the particles move over to the wall is a function of the diffusion constant and particle size Hence by determination of the fraction of aerosol penetrating the battery and use of the appropriate equation, the diffusion constant and particle size of the aerosol may be determined Important implicit assumptions are (1) the aerosol is homogeneous and (2) all particles which contact the wall adhere to it

---

12 LaMer V K , "Studies on Filtration of Monodisperse Aerosols," AEC Contract At (30-1) -651 NYO-512 June 1951

13 Rodebush W H "Filter Penetration by Aerosols of Very Small Particle Size " University of Illinois OSRD-2050 November 1943

This method seems to have several marked advantages for measurement of the size of very small particles (1) there is no lower limit to the size measurable (2) determination of aerosol concentrations are relatively easy, especially with radioactive isotopes and (3) the mathematics applicable although not simple is not nearly as involved as the Mie theory of light scattering

Historical The original basic equation relating the flow rate fraction penetrating the battery battery dimensions and diffusion constant was derived by Townsend[14] about 1900 for charged ions in air Townsend used a circular battery or tube in his work In the notation of this report, his equation is given below

$$F = 0\ 78\ e^{\alpha} + 0\ 096\ e^{6\ 1\alpha} + \cdots$$

$$\alpha = \frac{3\ 66\pi DZ}{Q}$$

F = fraction of diffusing component leaving battery
D = diffusion constant, cm^2/sec
Z = length of battery cm
Q = flow rate through battery cm^3/sec

About 1935 Nolan and Guerrini,[15] attempting to determine the size of condensation nuclei, developed with the aid of Timoney the following equation for a rectangular channel diffusion battery *

$$F = 0\ 91\ e^{\alpha} + 0\ 053\ e^{11\ 4\alpha} + \cdots$$

$$\alpha = \frac{3\ 77\ b\ DZ}{a\ Q}$$

F = fraction of diffusing component leaving battery
D = diffusion constant cm^2/sec
b = breadth of the narrow channel cm
a = one half the thickness of the narrow channel, cm
z = length of the diffusion battery cm
Q = flow rate through battery cm^3/sec

Nolan and Guerrini reported 0 028 microns to be the radii of condensation nuclei

---

14 Townsend J S "The Diffusion of Ions into Gases," Transactions Royal Society, 193-A, 129-158 (1900)

15 Nolan, J J , and V H Guerrini, "The Diffusion Constants and Velocities Fall in Air of Atmospheric Condensation Nuclei," Proc Royal Irish Academy, 43 4-24 (1935)

* This equation has different constants than the equation contained in the paper of Nolan and Guerrini An error was corrected in a later paper

L V Radushkevish [16] several years later measured the diffusion constants of aerosols using Townsend's method Radushkevich, using 400 thermometer capillaries for his battery, stated that the diffusion of aerosols in a capillary followed Townsend's theory Radushkevich used ammonium chloride smokes having radii of about 0 1 micron He also later developed[17] a different method for determination of the diffusion coefficient of aerosols

Rodebush [13] in a 1943 NDRC report applied the equations of Nolan and Guerrini to measurement of particles having radii of about 0 01 microns

Plan of Investigation The two immediate objectives of the work with the diffusion battery were (1) design of a battery capable of use with the DOP machine so that the diffusion method could be checked against the light scattering method at particle radii of about 0 15 micron, and (2) confirmation of the diffusion method using the ultimate in small particles, that is gas molecules

A diffusion battery has been designed for the DOP machine and it is now being assembled for use A series of tests have been made to study the diffusion method for gas molecules This is described in the following sections

Preliminary Experiments The first gas investigated was SO_3 A preliminary test was made in which dry air-gas was passed through a small circular tube containing a cylindrical section of bone dry Type 6 paper It was found that, although the SO_3 reacted with the paper as the test proceeded the paper became saturated and desorbed, or failed to absorb, the SO_3 gas molecules An attempt was made to eliminate this difficulty by introducing a small amount of water into the paper to hold all SO_3 as H_2SO_4 An objection to this method was the slow evolution of H_2O molecules from the paper, with formation of a visible aerosol in the tube This of course invalidated the measurements Evidently what was needed was an absorber with a negligible vapor pressure It was finally demonstrated by E E Grassel of this laboratory, that oleic acid a compound of negligible vapor pressure would absorb SO_3 quantitatively Use of oleic acid improved the procedure but results were still erratic and it was found necessary to (1) use a larger diameter tube to allow plenty of capacity for absorption (milligram quantities of gas were being absorbed in a relatively small paper) (2)

---

16 Radushkevich L V "A Study of the Kinetics of Aerosol Coagulation by the Diffusion Method " Acta Physicochemica U R S S 6, 161-182 (1937)

17 Radushkevich, L V "A New Method for Determining the Mobilities and Radii of Smoke Particles," Acta Physiochemica U R S S 11 265-276 (1939)

use a longer inlet and exit tube to better streamline the flow and (3) counterset the paper in the tube so that the motion of the air streamlines were not disturbed With these improvements an apparatus which gave consistent and reproducible results was finally obtained

For the NH_3 test saturated copper sulfate solution was used to impregnate the paper Evidently this reacts rapidly with NH_3 as no trouble was had with desorption from the paper In the NH_3 test it was not necessary to keep the paper and air stream dry as the evaporating water molecules from the surface of the paper do not have a tendency to form an aerosol with the approaching NH_3 molecules

During these experiments very little trouble was experienced from absorption and desorption of the test gas on the glass walls of the apparatus Since the gas concentrations were of the order of 1-5 mg/l, and the tests were operated for 15-30 min equilibrium between absorption and desorption was soon obtained, minimizing these effects The final apparatus and procedure used is described in the next section

1 Apparatus The apparatus is shown in Figure 10 The diffusion battery consisted of a piece of Type 6 paper wrapped into a cylindrical shape, inside diameter 3 5 cm The length of the paper was either 14 6 or 5 8 cm To insure streamline flow through the battery the inlet section to the battery was made 80 cm long and the exit section made 45 cm long, as shown in the apparatus The Type 6 paper was impregnated with oleic acid for the SO_3 test, and with saturated copper sulfate solution for the NH_3 test These impregnates allowed complete absorption of all gas molecules contacting the surface of the paper For drying the air influent to the apparatus a tube filled with layers of ascarite, silica gel and dehydrite was used This enabled dew points of less than -50°F to be obtained The ascarite removed all detectable CO_2 from the influent air

The gas generator was a modified 2-liter filtering flask immersed in a constant temperature bath Influent air to the generator passed over the liquid in the flask setting up a gas concentration For the SO_3 test, fuming sulfuric acid was used, containing about 20% free SO_3 For the NH_3 test the generator contained concentrated ammonium hydroxide dilute by a factor of 60 The gas absorbers or bubblers, were 500 ml graduated cylinders fitted with inlet and outlet tubes It was necessary to fit the inlet tube to the bubbler with a medium porosity glass disc, so that when using SO_3 the gas would be sufficiently dispersed to prevent aerosol formation in the bubbler Water was used to absorb the SO_3 gas and a weak acid solution used for the NH_3 test About 400 ml of absorber was used in either case All parts of the apparatus in contact with the test gas with minor exceptions were made of glass using ball joint connections A flowmeter and several manometers were provided

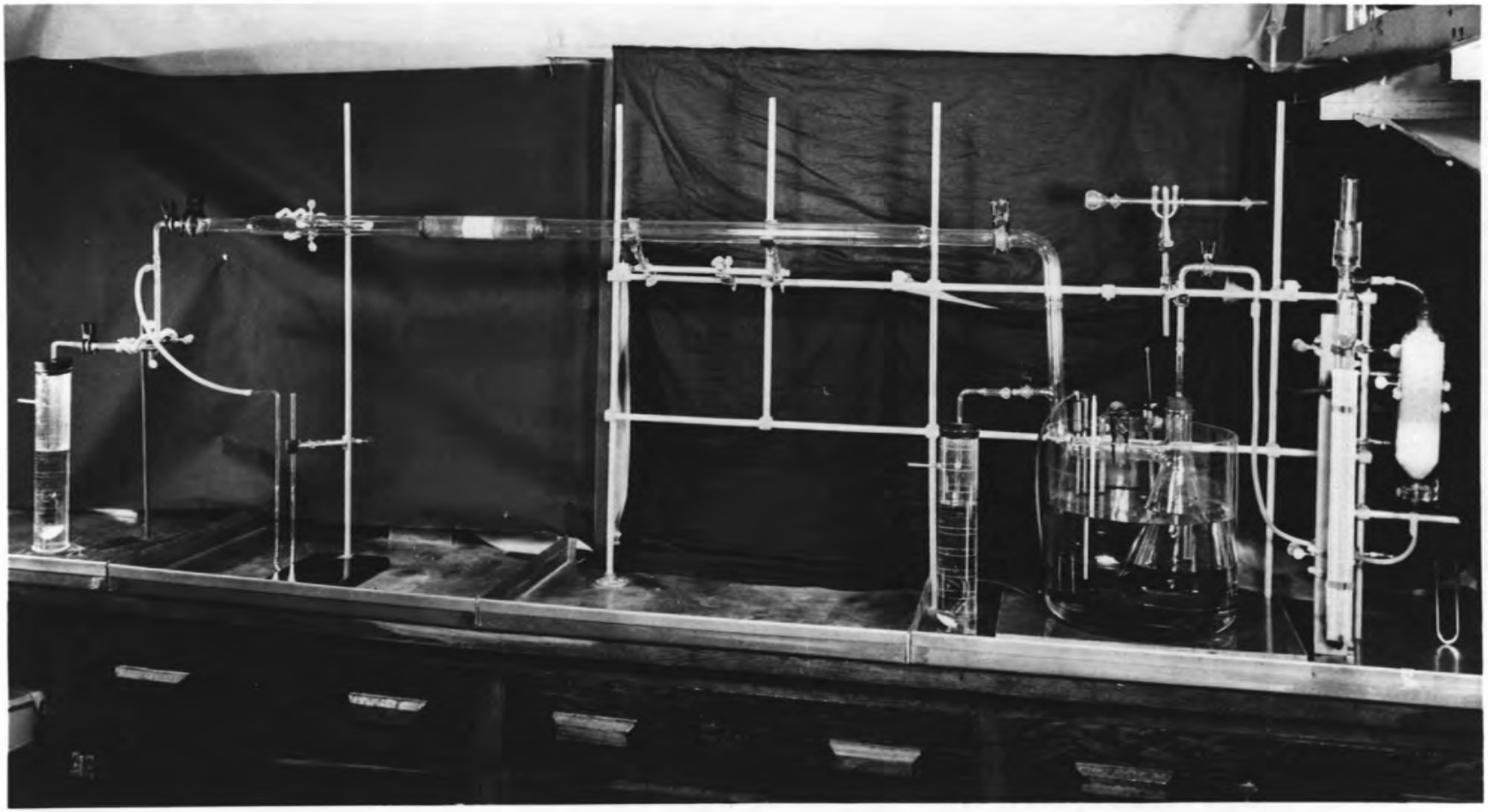

FIGURE 10 DIFFUSION CONSTANT DETERMINATION

2 Procedure Before or after each test a check was made to ascertain that the leaks were less than 0 1% of the flow rate and that the flow rate was at the desired value When running the SO_3 test, the "Dewpointer" was utilized to check that the water content of the influent air was less than 0 05 mg/l

After passing air at the deserved flow rate over the liquid in the generator for about 10-30 minutes equilibrium was obtained and a concentration sample taken at the test flow rate The sampling time was adjusted so that 10-30 mg of the gas were obtained for analysis

The desired gas concentration having been obtained flow was switched through the diffusion battery for about 15-30 minutes and 5 min penetration samples taken continuously After taking the penetration samples the flow rate changed to another value, and the procedure repeated The analytical procedures used for determining SO_3 and NH_3 are given in Appendix I From the results of the concentration and penetration determinations, the fraction of gas penetrating the battery was obtained

3 Results An example of the results obtained in one run is given in Table II The results are summarized in Table III

4 Discussion An experimental value for the diffusion constant of SO_3 could not be found in the literature so this was calculated by empirical equations due to Sherwood[18] and Andrussow [19] At the temperature and pressure used in these experiments Sherwood's equation gave 0 109 cm^2/sec as the diffusion constant of SO_3 and Andrussow's equation, 0 111 cm^2/sec These values compare with the value of 0 136 cm^2/sec obtained in this work In the case of NH_3 Sherwood's equation gives 0 187 cm^2/sec, and Andrussow's 0 200 Perry[20] gives 0 236 cm^2/sec as the diffusion constant of NH_3 at 1 atm, 760 mm Hg, equivalent to 0 242 cm^2/sec at the pressure used in these experiments 740 mm Hg These values compare with the value of 0 191 cm^2/sec obtained in this work

The reasonably close correlation between the values obtained in this work and the values obtained from other sources confirm the validity of the Townsend method for determination of diffusion constants completing this part of the investigation It was originally planned to also confirm the equation of Nolan and Guerrini for rectangular channels but this work has been dropped due to difficulties in battery construction

---

18 Sherwood, T K Absorption and Extraction, 1st Edition New York McGraw-Hill 1937

19 Andrussow L , "Uber die Diffusion in Gasen" Z Elektrochemie 54 566-571 (1950) 55 51-53 (1951)

20 Perry J H Chemical Engineer's Handbook 3rd Edition New York, McGraw-Hill 1950

TABLE II

ORIGINAL DATA SECOND NH_3 TEST

Length of battery 5 8 cm T = 25 7°C P = 740 mm Hg

Flow Rate 0 947 liters/minute		
Gas concentration	Start of test	2 11 mg/1
Gas penetration	1st 5 minutes	0 65 mg/1
	2nd	1 36 mg/1 (error)
	3rd	0 66 mg/1
	4th	0 65 mg/1
	5th	0 66 mg/1
Gas concentration	same flowrate	2 06 mg/1
Flow Rate 1 950 liters/minute		
Gas concentration	- new flow rate	1 78 mg/1
Gas penetration	1st 5 minutes	0 95 mg/1
	2nd	0 93 mg/1
	3rd	0 94 mg/1
Gas concentration	end of test	1 76 mg/1

Average gas concentration	0 947 liters/minute	2 08 mg/1
Average gas penetration	0 947 liters/minute	0 655 mg/1
Fraction penetrating battery	0 947 liters/minute	31 4%
Average gas concentration	1 950 liters/minute	1 77 mg/1
Average gas penetration	1 950 liters/minute -	0 94 mg/1
Fraction penetrating battery	1 950 liters/minute	53 2%

TABLE III

DIFFUSION CONSTANT DETERMINATIONS

Gas Used	Conc mg/liter	Battery Length cm	Flow Rate liters/min	Gas Penetrating Battery	Diffusion Constant cm^2/sec	
SO_3	6 75	14 6	0 950	17 4%	0 136	0 136
SO_3	5 59	14 6	1 960	37 6%	0 142	
SO_3	5 19	14 6	0 950	19 1%	0 130	
NH_3	2 40	14 6	0 947	9 2%	0 197	0 191
NH_3	2 07	14 6	1 950	34 9%	0 164	
NH_3	2 08	5 8	0 947	31 4%	0 213	
NH_3	1 77	5 8	1 950	53 2%	0 190	
NH_3	2 19	5 8	0 500	16 6%	0 189	
NH_3	2 04	5 8	0 750	27 4%	0 193	

NOTES

1 Temperature 24 ± 2°C Pressure about 740 mm Hg

2 Inside diameter of diffusion battery 3 5 cm

3 The diffusion constant was calculated from the percent gas penetration by Townsend s equation

4 The brackets on the left indicate tests that were made consecutively without turning off the apparatus

5 The brackets on the right show the average diffusion constant determined for each gas

5 Particle Size from Diffusion Constants Once the diffusion constant is obtained Millikan's equation[2] may be used to calculate the size of the diffusing component This is given below

$$D = \frac{kT}{6\pi Nr}\left[1 + \left(A + Be^{\frac{Cr}{\lambda}}\right)\frac{\lambda}{r}\right]$$

D = diffusion constant, cm^2/sec
N = viscosity of air c g s units
r = radius of diffusing particle
λ = mean free path of an air molecule cm
A = 0 864 B = 0 290 C = 1 25

Using the values obtained from the diffusion constants of SO_3 and NH_3 0 136 and 0 191 cm^2/sec respectively and the above equation the radii of the SO_3 molecule was calculated to be about 0 00024 microns or 2 4 A and the radii of the NH_3 molecule to be about 0 00021 microns, or 2 1 A There is some question about the validity of the ABC constants in the above equation This is being investigated

6 Conclusions The work to date has shown that the diffusion method may be used to estimate the size of particles as small as gas molecules

An Electrostatic Precipitator for the Determination of the Particle Size Distribution of Smokes (R L Quinn)

An electrostatic precipitator was used with some success in the study of the penetration of filter papers by methylene blue aerosols in this laboratory [21] From this familiarity with the instrument the thought occurred that while the particles were being collected by the precipitator they could be separated according to particle size as well If such a precipitator could be made to work it would be possible to determine the particle size distribution of a smoke in a manner of a few minutes This would be a most desirable instrument to have

Principles of Design In a rectangular cross-sectioned chamber through which smoke passes with parallel collecting plates on either side a direct current voltage of several kilovolts is placed across the plates As a smoke particle enters this "collecting area," a force proportional to the charge on the smoke particle and the voltage across the collecting plates, is exerted upon it in the direction of one of the collecting plates If the particles are all charged with the same polarity they will be attracted to the same plate

21 "Protective Equipment Evaluation Program Quarterly Reports," ORNL, Y-532 Y-605, Y-638 and Y-687

In order to achieve separation of the particles according to size on the collecting plate the following conditions must be met (1) the charge on all particles in addition to being of the same polarity must be proportional to the size of the particle (2) all particles must enter the collecting chamber at the same distance from the collecting plate (3) the velocity of all particles must be the same upon entering the chamber and (4) all particles must travel in a direction parallel to the collecting plate These conditions imply that a smoke stream surrounded by an air stream must pass through the collecting chamber under conditions of laminar flow when no voltage is across the collecting plates Also the smoke stream must be very small when compared to the distance between the smoke stream and the collecting plate These conditions also effect the design of the charging device, or ionizer which device puts the charge on the smoke particle It should be located immediately ahead of the collecting chamber it should have no fields, electric or thermal large enough to appreciably affect the path of the smoke and the dimension of the charging area in the direction of the flow should be kept as short as possible In the precipitator described more fully later an attempt was made to meet the foregoing conditions

In the final design of such an electrostatic precipitator for the determination of the particle size distribution of smokes the collecting plate would consist of a series of small plates rather than one large plate The particle size distribution could then be determined by measuring the electric current that flows to each plate because particles of approximate size uniformity would be collected on each plate and all particles of the same size would carry the same amount of charge Of course the precipitator would have to be calibrated first by measuring the particle size that was collected on each plate for a given set of operating conditions This could be done with an electron microscope

Theory of Operation The theory of the charging and collecting of particles by an electrostatic precipitator is available in a number of references,[22] [23] [24] and will not be given in any great detail here However a few of the most important equations that show the relationship and dependence of the particle size collected at a given point on the collecting plate and the operating conditions of the precipitator will be given

---

22 Industrial Electronics Reference Book Westinghouse Electric Corporation, pp 526-7 John Wiley (1948)

23 Chemical Engineering Handbook Third Edition pp 1039-40, McGraw-Hill (1950)

24 Pauling Linus "An Investigation of a Method for the Analysis of Smokes According to Particle Size " California Institute of Technology OSRD Contract No OEMsr-103, (1944)

Small charged spherical particles moving in a field either electrical or gravitational obey Stokes law [25] This says that the force required to give a particle constant velocity in the presence of a viscous dray is $F = 6\pi\eta Vr$ where F = force η = coefficient of viscosity V = velocity of particle and r = radius of the particle If the particle is moving in an electrical field the force is equal to QE, where Q is the charge of the particle and E is the electrostatic field strength The drift velocity of the particle is $V = \frac{QE}{6\pi\eta r}$ This equation holds until r becomes so small that it is comparable with the mean free path of the air molecules At this point, a semi-empirical correction due to Cunningham must be used The velocity then becomes $\left(v = \frac{QE(1+A\frac{\lambda}{r})}{6\pi\eta r}\right)$ where A = Cunningham's constant and λ= mean free path of air molecules As the particle passes through the collecting chamber it is subjected to two forces acting at right angles to each other There are two velocity components v_g and v_d where v_g is the velocity of gas or air passing through the chamber and v_d is the drift velocity of the particle due to the electrostatic field If the particle enters the chamber at a distance d from the collecting electrode the time td required for it to reach the collecting electrode is $td = \frac{d}{V_d}$ During this time interval td, the particle has traveled down the chamber a distance

$X = v_g t_d = \frac{v_g d}{v_d} \frac{6\pi v_g d\eta r}{QE(1+A\frac{\lambda}{r})}$ This equation would hold true if the velocity of the gas were constant at all points in the chamber Actually this is not the case When the smoke comes in exactly in the center of the chamber cross-section a more accurate equation is $X = \frac{6\pi\eta r v_g}{QE(1+A\frac{\lambda}{r})} \frac{2d}{3} = \frac{4\pi\eta r v_g d}{QE(1+A\frac{\lambda}{r})}$ [24]

The theory of charging the smoke particles is not quite as simple or straight-forward It appears that there are two distinct methods by which a particle may become charged [22] [23, 24] (1) charging by an electrostatic field (2) charging by molecular or heat motion or diffusion However in both cases the air is first ionized and the air ions then attach themselves to the smoke particles In order to charge all the particles as much as possible and with the same polarity a unipolar ion stream is required for charging the particles In field charging it is possible for a particle to pick up a maximum or saturation charge This occurs when the charge on the particle is sufficient to repel all other charges of the same polarity

---

25 Loeb, L B Fundamental Processes of Electrical Discharge in Gases p 83, John Wiley (1939)

in the immediate vicinity for a fixed field strength The maximum number of charges $n = E\left(1+2\frac{K-1}{K+2}\right)\frac{r^2}{e}$ [22] where n = number of charges on the particle E = electrostatic field strength K = dielectric constant of particle r = radius of particle and e = electric charge In cases where the particle does not pick up its saturation charge the equation takes the form $n = E\left(1+2\frac{K-1}{K+2}\right)\frac{r^2}{e}\frac{\pi i t}{E+\pi i t}$ [2] where i is the current density or ion current per unit area, and t is the time that the particle was in the field of this current density Thus for field charging the number of charges picked up by a particle is proportional to the radius of the particle squared

In addition to the drift velocity of the air ions due to the electrostatic field even higher velocities may be reached due to heat motion or Brownian movement And if the ion density surrounding the particle is high, there will be a number of collisions of the ions with the particle and some of the ions will diffuse to the particle causing it to become charged The greater the ion density the greater the number of collisions per unit time and the greater the number of charges on the particle This method of charging particles becomes increasingly important as the particle size decreases because the number of charges picked up by a particle due to field charging is proportional to the radius of the particle squared whereas the number of charges picked up by a particle due to diffusion charging is proportional to the radius

The approximate number of ions diffusing to a particle of radius r in a short time t is $n = 0\ 07\frac{irt}{Eue}$ [24] where i = ion current per unit area E = electrostatic field strength u = the mobility of the ions and e = electronic charge

The total number of charges on a particle at the time of precipitation is approximately $n = E\left(1+2\frac{K-1}{K+2}\right)\frac{r^2}{e}\frac{\pi i t}{E+\pi i t} + 0\ 07\frac{irt}{Eue}$ From this equation it can be seen that field charging is the more important for large particles and diffusing charging is the more important for small particles Since Q = ne this equation may be used to determine Q which in turn may be substituted in the equation for X to determine at what point on the collecting plate the particle will be collected

Preliminary Investigation This theory was considered in the design and construction of the electrostatic precipitator shown in Figure 11 The work however was divided into two phases (1) the problem of obtaining the required conditions of laminar flow through the precipitator and (2) the problem of charging the smoke particles and collecting them at the desired position on the collecting plate Any concern about the latter was thought to be useless unless and until the first phase could be accomplished

In trying to obtain suitable conditions of flow through the precipitator the unit was first constructed without the collecting plates or the ionizer installed At about this time it was discovered that an electrostatic precipitator of similar design and purpose had previously been constructed at the California Institute of Technology From the report of this work[24] the idea of installing the capillary glass tube in the smoke stream and the 5 millimeter glass tubes in the air streams was obtained These tubes improved the laminar flow at low flow rates considerably

At first it was thought that the smoke could be made to flow down the length of precipitator as a thin ribbon However, due to the difficulties encountered in trying to obtain satisfactory flow conditions the ribbon of smoke had to be abandoned in favor of a thread of smoke In this manner laminar flow was obtained at flow rates of from 5 to 30 cm per second Optimum flow conditions appeared to hold at 12 to 15 cm per second At this flow rate a very fine thread of smoke could be seen for the entire length of the collecting chamber Thus the problem of obtaining the necessary conditions of laminar flow appeared to have been solved

Current Investigations The problem of charging the smoke particles and collecting them at the desired positions on the collecting plate is now being studied For purposes of experimentation with the precipitation of smoke particles it was decided to use one long collecting plate instead of a series of small ones The small ones could be added later after it appeared that the precipitator would work

From the very first experimental work up to the present major difficulty appeared to be in getting the proper charge on the smoke particles This still appears to be true At first it was thought that a corona discharge would be used for this purpose However after reading the California Institute of Technology report it was decided that this method probably was not too good Since a uniform ion current of only 10^{-8} amp per cm^2 is all that is required to charge the smoke particles sufficiently for proper precipitation it was decided after some thought to use an alpha source as a source of ions An alpha source was obtained which had an activity of 0 0024 curie of polonium spread over one square inch of surface With this amount of activity and a voltage of 25 KV across the ionizing plates, a current of 6×10^{-7} amp was obtained This is ap-

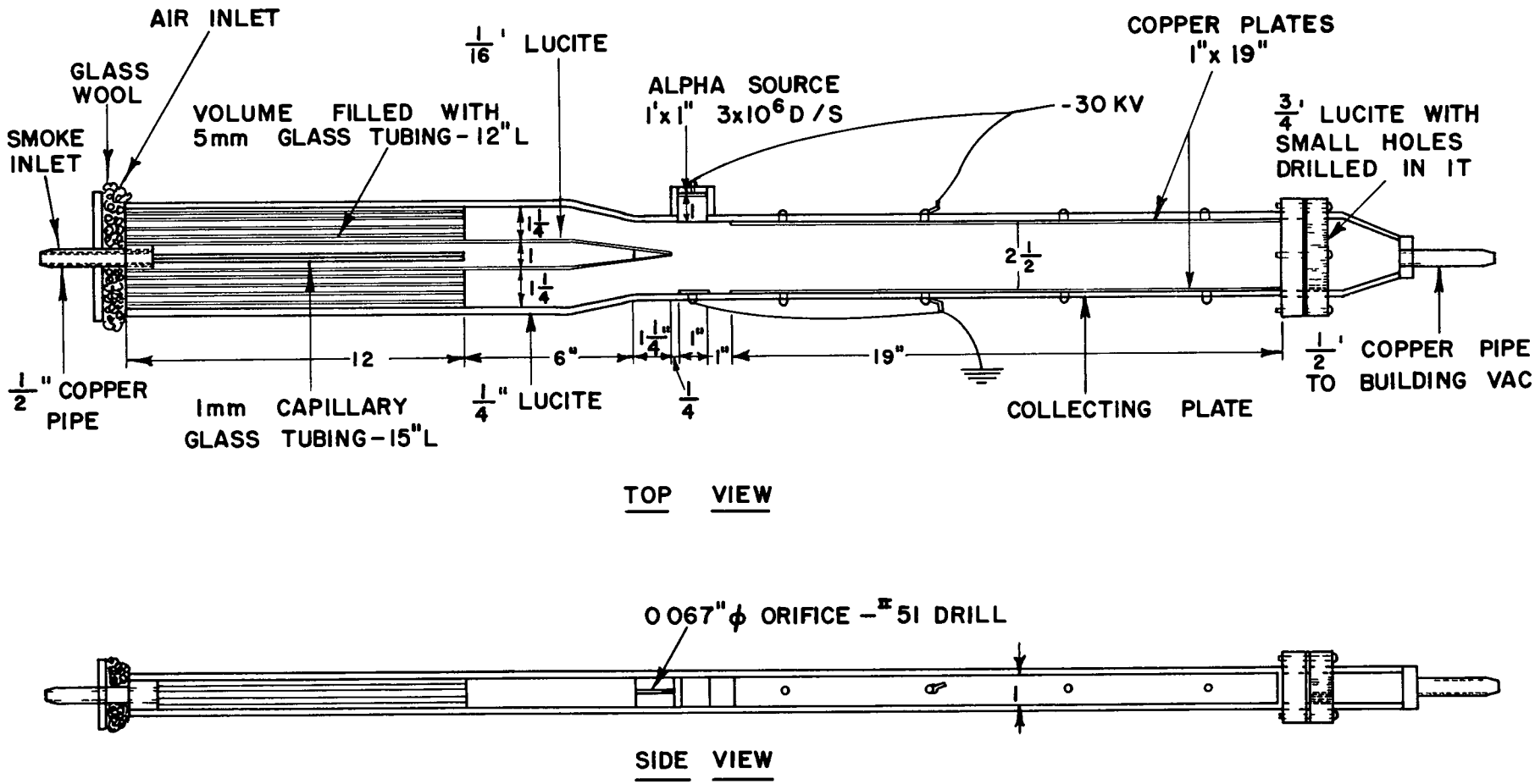

FIGURE 11 ELECTROSTATIC PRECIPITATOR

proximately equal to 10^{7} amp per cm^2 It is thought that such a charging device as this will be much more stable and reproducible than one that uses a corona discharge and it should give a steadier ion current To make certain that only ions of one polarity will attach themselves to the smoke particles the alpha source was located at a distance of approximately 2 5 inches from the smoke stream This was well beyond the range of the alpha particles from the polonium source that was used The alpha particles ionize the air molecules on one side of the smoke stream and the negative air ions are pulled through the smoke stream by the electric field across the charging device The smoke particles must pass through this negative ion stream that is traveling at right angles to the smoke stream and is one inch wide The smoke particles are in this field of negative ions for a period of approximately $\frac{2.54}{13\ 5} = 0\ 19$ second

Using the above information it is possible to make a sample calculation of where the smoke particles will be precipitated for the precipitator shown in Figure 11 Assuming the following operating conditions $i = 6\ 45\text{x}10^{7}$ amp $= 1\text{x}10^{7}$ amp/cm^2 = 300 statamps/cm^2, E = 26 5 KV = 9 28 statvolts/cm, V_g = 14 cm/sec, t = 0 182 and K = 2 5

$$n = \left(1 + 2\,\frac{K-1}{K+2}\right)\frac{Er^2}{e}\ \frac{\pi it}{E+\pi it} + 0\ 07\,\frac{irt}{Eu}$$

$$n = \left(1 + 2\,\frac{2\ 5-1}{2\ 5+2}\right)\frac{9\ 28\text{x}3.\ 14\text{x}300\text{x}.\ 182}{9\ 28+3\ 14\text{x}300\text{x}\ 182}\,r^2 + \frac{07\text{x}300\text{x}.182}{9\ 28\text{x}660}\,r$$

$$= 3\ 1 \times 10^{10}\,r^2 + 1\ 3 \times 10^{6}\,r \quad (r \text{ in cm})$$

$$= 310\,r^2 + 130\,r \qquad (r \text{ in } \mu)$$

$$\text{and } X = \frac{4\pi\eta v_g dr}{QE_c(1 + A\frac{\Delta}{r})}$$

$$= \frac{4\text{x}3\ 14\text{x}1\ 8\text{x}10^{4}\text{x}14\text{x}3\ 18r}{neE_c(1 + \frac{.874\text{x}10^{5}}{r}}$$

$$= \frac{2\ 10\text{x}10^{8}r}{(1 + \frac{874\text{x}10^{5}}{r})\,nE_c} \quad (r \text{ in cm})$$

$$= \frac{21{,}000\ r}{(1 + \frac{0874}{r})\,nE_c} \quad (r \text{ in } \mu)$$

If the voltage across the collecting plates is 4KV or E_c = 2 statvolts/cm the following table may be constructed

Particle Size r (μ)	No of Charges per Particle $n = 310\ r^2 + 130\ r$	Distance to Point of Precip $X = \frac{4\pi\epsilon v_g dr}{ne\,(1 + A\frac{\lambda}{r})}$ (cm)
0 005	007 + 65 = 0 66	2 84
0 01	03 + 1 3 = 1 33	10 8
0 02	124 + 2 6 = 2 72	13 0
0 05	775 + 6 5 = 7 28	27 3
0 10	3 1 + 13 = 16 1	35 0
0 20	12 4 + 26 = 38 4	38 5
0 50	77 5 + 65 = 142 5	31 2
1 00	310 + 130 = 440	21 9
2 00	1240 + 260 = 1500	13 4
5 00	7750 + 650 = 8400	6 14

Of course it is realized that a smoke particle cannot pick up a fraction of a charge so all values of n were rounded off to whole numbers in the calculation of X From the values of X it is seen that there is some separation of particles when they are collected However instead of only one particle size being collected at one point on the collecting plate there are two different particle sizes collected at every point on the collecting plate except the end point While this is not desirable and limits the use of the precipitator somewhat it would still be a very desirable instrument to have if it could be made to approach the calculated performance It would for example be good for all smokes whose particle size range fell within the interval of from 0 005μ to 0 2μ radius This range could probably be shifted a small amount by changing the operating conditions Also, it is thought that it could be used for smokes containing larger particle size, if it were used in conjunction with a particle collector of some kind that would remove all the particles above 0 2μ radius Readings could then be made with and without the auxiliary collector ahead of the precipitator to obtain the particle size distribution

Up to this time the degree of separation that can be obtained with the electrostatic precipitator has not been determined It appears that this will be rather slow and difficult As mentioned previously in this report good conditions of laminar flow have been obtained When these conditions of flow are met and the voltage is applied to the ionizer and the collecting plates, the smoke stream can be seen to bend toward the collecting plate and to spread out After it spreads out some it becomes invisible An attempt has been made to collect some samples at different distances down the collecting plate and to determine particle size distribution of these samples with an electron microscope However at the present time no good photographs of the particles have been obtained with the electron microscope In the photographs taken so far the particles all

appear to be very indistinct and fuzzy around the edges not at all like the pictures shown in the C I T report [4] This is very difficult to explain because rosin smoke was used here, the same as it was there This smoke was used so that the results obtained here could be compared with those obtained there, as given in the report mentioned above

It is hoped that the particle size separation that can be obtained by this electrostatic precipitator can be determined in the near future

APPENDIX I

Analytical Methods

SO_3 Determinations

Because of the special bubbler used to disperse the gas it was possible to use water as an absorber The resulting sulfuric acid was titrated against 0 05 N sodium hydroxide using phenolphthalein as an indicator

NH_3 Determination

The bubblers were made up to contain 25 0 ml of 0 05 N H_2SO_4 and about 400 ml water After absorption of the ammonia gas the bubbler solution was titrated to pH 6 5 using the "Fisher Titrimeter " The method is quite sensitive and accurate and probably accounts for the better precision of the NH_3 work