[redacted]

MARTIN MARIETTA ENERGY SYSTEMS LIBRARIES
3 4456 0360583 7

ORNL-1233
Progress
10a

DECLASSIFIED
Classification Changed To:
By Authority Of:
By:

AEC RESEARCH AND DEVELOPMENT REPORT
LABORATORY RECORD
1954

ANALYTICAL CHEMISTRY DIVISION

QUARTERLY PROGRESS REPORT

FOR PERIOD ENDING DECEMBER 26, 1951

CENTRAL RESEARCH LIBRARY
DOCUMENT COLLECTION
LIBRARY LOAN COPY
DO NOT TRANSFER TO ANOTHER PERSON
If you wish someone else to see this document, send in name with document and the library will arrange a loan.

OAK RIDGE NATIONAL LABORATORY
OPERATED BY
CARBIDE AND CARBON CHEMICALS COMPANY
A DIVISION OF UNION CARBIDE AND CARBON CORPORATION
UCC
POST OFFICE BOX P
OAK RIDGE, TENNESSEE

[redacted]

[redacted]

ORNL-1233
Progress

This document consists of 116 pages.
Copy 10 of 142 . Series A.

Contract No. W-7405, eng-26

ANALYTICAL CHEMISTRY DIVISION

QUARTERLY PROGRESS REPORT

for Period Ending December 26, 1951

M. T. Kelley, Director
C. D. Susano, Associate Director

DATE ISSUED:

APR 30 1952

OAK RIDGE NATIONAL LABORATORY
operated by
CARBIDE AND CARBON CHEMICALS COMPANY
A Division of Union Carbide and Carbon Corporation
Post Office Box P
Oak Ridge, Tennessee

[redacted]

MARTIN MARIETTA ENERGY SYSTEMS LIBRARIES
3 4456 0360583 7

[redacted]

[redacted]

[redacted]

[redacted]

ORNL-1233
Progress

INTERNAL DISTRIBUTION

1. G. T. Felbeck (C&[redacted]CC)
2-3. Chemistry Library [redacted]
4. Physics Library [redacted]
5. Biology Library
6. Health Physics Libra[redacted]
7. Metallurgy Library
8. Reactor Experimental [redacted]gineering Library
9-10. Training School Library [redacted]
11-14. Central Files
15. C. E. Center
16. C. E. Larson
17. W. B. Humes (K-25)
18. W. D. Lavers (Y-12)
19. A. M. Weinberg
20. J. A. Swartout
21. E. D. Shipley
22. E. J. Murphy
23. F. C. VonderLage
24. M. T. Kelley
25. E. H. Taylor
26. A. H. Snell
27. F. L. Steahly
28. S. C. Lind
29. R. C. Briant
30. J. S. Felton
31. C. E. Winters
32. A. Hollaender
33. K. Z. Morgan
34. C. P. Keim
35. G. H. Clewett
36. A. S. Householder
37. D. W. Cardwell
38. E. M. King
39. C[redacted]D. Susano
40. [redacted] B. Hahn
41. [redacted]. E. Boyd
42. [redacted]J. A. Lane
43. [redacted]G. W. Parker
44. [redacted] J. W. Robinson
45. [redacted] L. J. Brady
46. [redacted]. H. P. House
47. [redacted]7. O. Menis
48. C. H. Secoy
49. L. E. Burkhart
50. R. N. Lyon
51. S. A. Reynolds
52. P. F. Thomason
53. R. Rowan, Jr.
54. D. E. LaValle
55. A. R. Brosi
56. A. F. Roemer, Jr.
57. E. I. Wyatt
58. G. W. Leddicotte
59. C. Feldman
60. T. E. Willmarth
61. C. L. Purros
62. J. H. Edgerton
63. E. J. Frederick
64. L. T. Corbin
65. O. K. Neville
66. P. M. Reyling
67. [redacted]. D. Cowen
68. [redacted] D. Schiffman, K-25
69. [redacted] P. Raaen
70. J. C. White
71. W. K. Miller
72-74. Central Files (O.P.)

[redacted]

[redacted]

[redacted]

[redacted]

EXTERNAL DISTRIBUTION

75-82. Argonne National Laboratory
83-87. Atomic Energy Commission, Washington
88-91. Brookhaven National Laboratory
92-95. Knolls Atomic Power Laboratory
96-101. General Electric Company, Richland
102-105. Los Alamos
106. Mound Laboratory
107-109. New York Operations Office
110. Patent Branch, Washington
111-125. Technical Information Branch, ORE
126-129. University of California Radiation Laboratory
130-133. Carbide and Carbon Chemicals Company (Y-12)
134-137. E. I. du Pont de Nemours and Company
138-139. New Brunswick Laboratory
140. Savannah River Operations Office
141-142. Westinghouse Electric Corporation

[redacted]

[redacted]

[redacted]

[redacted]

Reports previously issued in this series are as follows:

ORNL-686	Period Ending March 31, 1950
ORNL-788	Period Ending June 30, 1950
ORNL-867	Period Ending October 10, 1950
ORNL-955	Period Ending January 10, 1951
ORNL-1088	Period Ending March 26, 1951
ORNL-1113	Period Ending June 26, 1951
ORNL-1129	Period Ending September 10, 1951

[redacted]

[redacted]

[redacted]

PUBLICATIONS

ANALYTICAL CHEMISTRY DIVISION - X-10 SITE

A. D. Horton and P. F. Thomason, "Polarographic Determination of Sulfate," *Anal. Chem.* **23**, 1859 (1951).

ANALYTICAL CHEMISTRY DIVISION - Y-12 SITE

C. D. Susano, *Quarterly Progress Report for Period Ending September 26, 1951,* Y-B31-288.

C. D. Susano, R. Rowan, Jr., and R. L. McCutchen, *Statistical Quality Control Report,* Y-B31-289 (Oct. 10, 1951).

C. D. Susano, R. Rowan, Jr., and R. L. McCutchen, *Statistical Quality Control Report,* Y-B31-296 (Oct. 19, 1951).

W. K. Miller and R. Rowan, Jr., *Determination of the Phthalate Ion in Process Recycle Liquors,* Y-825 (Nov. 5, 1951).

C. D. Susano, *Analyses of Zirconium Hydride,* Y-B31-304 (Nov. 16, 1951).

M. T. Kelley and C. D. Susano, *Analytical Chemistry - ANP Program Quarterly Progress Report for Period Ending November 20, 1951,* Y-B31-305 (Nov. 20, 1951).

C. D. Susano and R. L. McCutchen, *Statistical Quality Control Report,* Y-B31-309 (Nov. 29, 1951).

C. D. Susano and R. L. McCutchen, *Statistical Quality Control Report,* Y-B31-311 (Dec. 14, 1951).

[redacted]

[redacted]

[redacted]

TABLE OF CONTENTS

	PAGE
PUBLICATIONS	v
ABSTRACT	xxiii
ANALYTICAL CHEMISTRY DIVISION - X-10 SITE	1
RESEARCH AND DEVELOPMENT	1
Ionic Analyses	1
Differential Polarography	1
Separation of Uranium for Analytical Purposes from Aluminum and Copper by Solvent Extraction	4
Elimination by Solvent Extraction of Copper Interference in Polarographic Uranium Determination: Polarography of Uranium in Nonaqueous Media	9
Coulometric Determination of Uranium	11
Continuous Analysis of TBP Solutions for Uranium	17
Determination of Aluminum in BaLa Process Samples	17
Determination of Cobalt in Aluminum Alloy	18
Factors Affecting the Potentiometric Titration of Small Amounts of Plutonium	18
Reductimetric Titration of Plutonium in Nitrate Solution	19
Polarographic Behavior of Chromium(VI) and Vanadium(V) in Lithium Hydroxide Solution	21
Colorimetric Determination of Versene	21
Polarographic Determination of Thallium	21
Determination of Selenium	22

[redacted]

[redacted]

[redacted]

[redacted]

	PAGE
Determination of Antimony	22
Vacuum Fusion Analysis	22
Testing of Polarographs	23
Radiochemical Analyses	23
Nuclear Properties	23
Thermal-neutron capture cross section of uranium^{238}	23
Measurement of Radioactivity	23
Calibration and standardization of instruments	23
Recalibration of high-pressure ion chamber	25
X-ray 4π counting	25
Gamma activity by scintillation counting	26
Use of Tracerlab Geiger-Mueller tubes	26
Radioisotope Analysis	26
Analysis of Cyclotron Products	26
Identification of Radioelements	26
Radiochemical Gas Analysis	26
Dissolver off-gas analysis for noble gases	26
Xenon problem - ANP	31
Application of Ion Exchange in Radiochemical Analysis	33
Plutonium separation by ion exchange	33
Solvent Extraction Methods	34
Plutonium SCRUP Program	34
Extraction of anionic species - protactinium, thorium, zirconium, and hafnium	35
Separation of scandium and yttrium using TTA-xylene extraction	36
Radiochemical Analyses for the Homogeneous Reactor Project	36
Activities in Neutron-bombarded Water	37

[redacted]

[redacted]

[redacted]

[redacted]

	PAGE
Activation Analyses	39
Thermal-Neutron Activation Cross Section for Uranium^{238}	39
Determination of Trace Amounts of Strontium in Barium Chloride	39
Analytical Procedures	39
Ion-exchange methods	40
Solvent extraction methods	40
Precipitation methods	40
New Applications of Activation Analysis	40
Spectrochemical Analyses	40
Spectrochemical Working Curves	40
Measurement of Recovery of Aqueous Phase in TBP Extractions	40
Analysis of Uranyl Fluoride	41
Inorganic Preparations	42
Aluminum Phosphide	42
Phosphors	43
Other Preparations	43
Analytical Control of the HRE Solution	43
Princo Densitrol	43
Radiation-Resistant Glasses	44
Q Measurement	45
Optical and Electron Microscopy	46
Optical and Electron Microscopic Analyses of HRE Corrosion Films	46
Type-347 Stainless Steel as a Shadowcasting Material for Electron Microscopy	47

[redacted]

[redacted]

[redacted]

	PAGE
Traveling Stage for Welch Densitometer	47
Additional Services	49
Chemical Analysis of HRE Corrosion Films	50
SERVICE ANALYSES	51
Ionic Analyses	51
Radiochemical Analyses	51
General Radiochemical Analyses	51
Plutonium Separation by Ion Exchange	51
Laboratory expansion program	51
Water Analysis Laboratory	51
Gold, Cadmium, and Copper in Reactor Metals	51
Analysis of Aluminum-Silicon Alloys	53
Analysis of Zirconium-Tungsten Alloys	53
Fluoride in ANP Fuel Eutectic	53
Analysis of Irradiated Versene Solutions	53
Laboratory and Semiworks Control	54
Pilot Plant Control	54
Purex Control Manual of Analytical Methods	54
New Equipment	54
Fluorophotometer	54
Beckman automatic titrator	54
TTA extraction flask	54

[redacted]

[redacted]

PAGE

New Methods 54

Nitrite ion 55

Orthophosphate 55

Sodium carbonate 55

HRE Analyses 55

ANALYTICAL CHEMISTRY DIVISION - Y-12 SITE 57

RESEARCH AND DEVELOPMENT 57

Determination of Oxygen in Lead 57

Determination of Oxygen in Helium 57

Determination of Oxygen in Sodium 57

Determination of Oxygen and Nitrogen in Lithium 57

Determination of Elements of High Neutron-Capture Cross Section in Sodium 57

Colorimetric Determination of Cobalt 57

Clarity of Borated Water 57

Studies of Diatomaceous Earth 58

Determination of Nickel, Nickel Oxide, and Available Oxygen in Alkali Hydroxides 59

Determination of Oxygen in Sodium-Potassium Alloy 59

Study and Analysis of Fluoride Eutectics 59

pH of Aqueous Solutions of Alkali Fluorides 59

Dissolution of the Eutectics 60

Determination of the Major Components 60

[redacted]

[redacted]

[redacted]

	PAGE
Determination of Impurities	61
Chromium	61
Manganese	62
Molybdenum	62
Determination of Boron in Trace Quantities	63
Determination of Uranium by Cellulose Column Extraction Methods	65
Determination of Trace Amounts of Thorium	68
Analysis of Barium Hydroxide	69
Barium Oxide	69
Strontium	70
Separation of Uranium from Trace Elements - TBP Extraction	70
Analysis of Uranyl Sulfate Solutions	71
Determination of Uranium by Spectrophotometric Measurements	71
Determination of Uranium(IV)	72
Determination of Uranium by Density Measurements	72
Determination of Uranium by Direct Titration with Chromous Solution	73
Determination of Trace Elements	74
Molybdenum	75
Tungsten	75
Hydrogen and oxygen	75
Silicon dioxide	75
Nitrogen	76
Iodate	77
Ruthenium	77
Copper	79
Zirconium	79
Chromium	80
Nickel	80

[redacted]

[redacted]

[redacted]

[redacted]

	PAGE
Determination of Sulfide in Heavy Water	81
Quality Control	82
General Ionic Analysis Laboratory	82
HRP Control Laboratory	82
X-10 Laboratories	86
SERVICE ANALYSES	88
Analytical Services for ANP	88
Experimental Engineering	88
Reactor Fuels	88
Alkali Hydroxides	88
Analytical Services for HRP	89
Analysis of Ore and Related Materials	89
Miscellaneous Analyses	90

[redacted]

[redacted]

LIST OF FIGURES

FIGURE	TITLE	PAGE
1	Simplified Circuit of ORNL High-Sensitivity Polarograph as Modified to Permit Polarography by RC Differentiation	3
2	RC Differentiating Network	4
3	Regular Polarogram of Uranium(VI) in the Presence of Copper(II)	5
4	RC Differential Polarogram of Uranium(VI) in the Presence of Copper(II)	6
5	Polarogram of Uranium(VI) in Glacial Acetic Acid Medium	14
6	Microreduction Apparatus	16
7	Automatic Potentiometric Titration of Plutonium(IV) with Mercurous Nitrate	20
8	Automatic Potentiometric Titration of Iron(III) and Plutonium(IV) Simultaneously with Mercurous Nitrate	20
9	Aluminum Absorption Curve of Phosphorus^{32} Separated from Mud Hen Tissue	27
10	Photograph of Dissolver Off-Gas Analysis Apparatus	28
11	Dissolver Off-Gas Analysis Apparatus (Schematic Flow Sheet)	29
12	Plot of Counting Rate vs. Pressure of Krypton^{85}	30
13	Apparatus for Iodine^{131} Diffusion Experiment	32
14	"Spill Can" for Containing Aqueous Samples During Neutron Bombardment	37

[redacted]

[redacted]

[redacted]

FIGURE	TITLE	PAGE
15	Apparatus for Neutron Bombardment of Aqueous Samples	38
16	Dow Latex Shadowcast with Type-347 Stainless Steel	48
17	Traveling Stage for Use with Welch Densitometer in Measuring Electron Diffraction Patterns	49

[redacted]

[redacted]

LIST OF TABLES

TABLE	TITLE	PAGE
1	Effect of HNO_3 Concentration on Recovery of Uranium from Synthetic MTR Sample by TBP-Varsol Extraction	7
2	Uranium Losses to the Uranium-Depleted Synthetic MTR Aqueous Phase and the Stripped Organic Phase	8
3	Decontamination of MTR Feed Solution by Extraction with TBP-Isopropyl Ether (30:70 vol %)	8
4	Effect of TBP Content of Isopropyl Ether in the TBP-Isopropyl Ether Extraction of Uranium from a Synthetic MTR Feed Solution	8
5	Decontamination of MTR Feed Solution by Extraction with TBP-Isopropyl Ether (5:95 vol %)	8
6	Polarographic Study in Various Organic and Aqueous Solvents of Uranium Extracted with TBP-Varsol	10
7	Polarographic Study in Various Organic and Aqueous Solvents of Uranium Extracted with TBP-Isopropyl Ether	12
8	Reduction of Uranium(VI) to Uranium(IV) with Cadmium-Plated Copper Coil	16
9	Determination of Plutonium by Ceric Sulfate Titration	19
10	Oxygen and Nitrogen in Uranium Metal Determined by Vacuum Fusion Analysis	22
11	Thermal-Neutron Activation Cross Section of U^{238}	23
12	Thermal-Neutron Absorption Cross Sections of U^{238}	24
13	Disintegration Rate of Na^{24} Determined by Coincidence Counting, 4π Counting, and Ion Measurement	24

[redacted]

[redacted]

[redacted]

TABLE	TITLE	PAGE
14	Absolute Disintegration Rate of Nb^{95} Prepared for Abbott Laboratories	25
15	Fission Product Analyses of ANP Fuel Eutectic	31
16	Effect of HCl Concentration on Plutonium Retention in Dowex A-1 Column	34
17	Effect of Time on Stripping Plutonium from 0.5 *M* TTA-Xylene with 4.5 *M* H_2SO_4	35
18	Effect of HCl Concentration on Extraction of Iron from HCl Solution with 0.5 *M* TTA-Xylene	35
19	Effect of HCl Concentration on Extraction of Pa^{233} with 5% MDOA-Xylene	35
20	Effect of HCl Concentration on Extraction of Zr^{95} from HCl Solution with 5% MDOA-Xylene	36
21	Effect of HCl Concentration on Extraction of Hf^{181} from HCl Solution with 5% MDOA-Xylene	36
22	Radiochemical Analyses of Irradiated Water	39
23	Activities in Irradiated Water	39
24	Gross Beta Activity of Irradiated Water after Various Decay Times	39
25	Determination of Strontium in Barium Chloride	40
26	Metals for which Spectrochemical Working Curves Have Been Developed	40
27	Phosphors Prepared for the Physics Division	43

[redacted]

[redacted]

[redacted]

TABLE	TITLE	PAGE
28	Chemical Stability of Materials Considered for *Q*-Coil Construction	45
29	dÅ Values of Oxide Films Induced on Type-347 Stainless Steel Compared with Dow X-ray Index Card dÅ Values for *alpha*-Fe_2O_3	46
30	Comparison of Composition of Type-347 Stainless Steel Before and After Sputtering	47
31	Typical Analytical Results on Passivation Films Formed on Type-347 Stainless Steel	50
32	Summary of Analytical Service Work at X-10 Site	52
33	Removal of Boron from Diatomaceous Earths by Washing with 1:1 HCl	58
34	pH of Saturated Aqueous Solutions of Fulinak	60
35	Determination of Chromium by the Diphenylcarbazide Method	61
36	Effect of Uranium(VI) on the Determination of Chromium by Diphenylcarbazide	62
37	Spectrophotometric Determination of Molybdenum as the Thiocyanate Complex	63
38	Spectrophotometric Determination of Boron with 1,1′-Dianthrimide	64
39	Spectrophotometric Determination of Boron by Carmine	64
40	Determination of Uranium in Synthetic Samples by Cellulose Column Extraction	66
41	Determination of Uranium in Bartow Clay After Cellulose Column Extraction	68

[redacted]

[redacted]

TABLE	TITLE	PAGE
42	Distribution of Uranium in Organic-Aqueous Phases	71
43	Effects of Nickel and Chromium on the Density of Uranyl Sulfate Solutions	73
44	Comparison of Results of the Direct Chromous and the Jones Reductor-Ceric Sulfate Titrations for the Determination of Uranium	74
45	Precision of Determination of Silicon Dioxide in Uranyl Sulfate Solution	76
46	Determination of Nitrogen in Uranyl Sulfate Solution by Direct Chromous Reduction and Kjeldahl Distillation	77
47	Precision of Determination of Iodate in Uranyl Sulfate Solution by Reduction with Hydrazine and Argentometric Titration of the Iodide	78
48	Determination of Ruthenium - Test of Beer's Law	78
49	Determination of Ruthenium - Test of Recovery on Distillation	78
50	Zirconium by the Chloranilic Acid Method after Extraction of Uranium with TBP	80
51	Effect of Variation of Uranium Concentration in the Blank on the Colorimetric Determination of Nickel by Dimethyglyoxime	81
52	Polarographic Determination of Sulfide	81
53	Comparison of Uranium Test Results Obtained by Two Colorimetric Methods	82
54	General Ionic Analysis Laboratory Control Program	83

[redacted]

[redacted]

[redacted]

TABLE	TITLE	PAGE
55	HRP Analytical Control Program	84
56	Uranium Analytical Control Program	85
57	Summary of Analytical Service Work at Y-12 Site	87

[redacted]

[illegible]

[illegible]

[illegible]

[redacted]

ABSTRACT

ANALYTICAL CHEMISTRY DIVISION - X-10 SITE

Work in the new technique of differential polarography has been started for the purpose of eliminating copper interference in the polarographic determination of uranium. This is of particular interest in the analysis of the highly radioactive feed solutions from the U^{235} recovery process for the MTR, since they contain copper impurity. The TBP-isopropyl ether extraction of uranium is being investigated for this purpose, and the study of the coulometric titration of uranium reported last quarter has continued. Also, the polarography of uranium in nonaqueous media is being studied.

Factors affecting the automatic microtitration of plutonium with $Ce(SO_4)_2$ are discussed. The possibility of a $HgNO_3$ potentiometric titration of plutonium, both alone and simultaneously with iron, is considered.

Satisfactory methods were developed or adapted for cobalt in aluminum alloy, for colorimetric determination of Versene, and for selenium and antimony in highly radioactive solutions. The method of vacuum-fusion analysis was applied to the determination of oxygen in uranium and nickel and hydrogen in aluminum-silicon alloys. Thallium in NaI crystals was determined polarographically. The thallium is used as an activator for the scintillation counter crystals that are of interest to the Physics Division.

Consideration was given to the continuous spectrophotometric analysis of TBP solution for uranium, polarographic behavior of chromium(VI) and vanadium(V) in LiOH, and the fluorometric and volumetric determination of aluminum in RaLa process samples.

Five new ORNL high-sensitivity recording polarographs, Model Q-1160, were evaluated and approved for use.

The thermal-neutron capture cross section of U^{238} has been determined by activation methods. Calibration methods and intercomparisons of various instruments are reported. The application of scintillation gamma counting to process analyses is discussed. A method for determination of noble gas activities in ARCO dissolver off-gas is presented, and a discussion of the analyses related to the ANP xenon problem is given. Ion-exchange and solvent-extraction methods for plutonium in SCRUP dissolver solution have been investigated. A program has begun for the development of radiochemical methods for the HRE; the first problem is flux determination.

[redacted]

[redacted]

The method of activation analysis was used in determining trace amounts of strontium in $BaCl_2$. Applicability of certain separation methods – e.g., ion exchange, solvent extraction, and precipitation – to activation analysis is discussed.

New working curves are reported for the spectrochemical determination of aluminum, copper, and nickel by the porous-cup technique. An apparently satisfactory method of recovery of the aqueous phase in TBP extractions of uranium solutions by the use of Co^{60} tracer is described.

The optical and electron microscopic analyses, as well as the chemical analysis, of passivation films formed on type-347 stainless steel are discussed. These analyses are of interest to HRP. Some suggestions are made regarding the chemical and physical structure of the film. The status of the evaluation of the Princo Densitrols for measuring density of the HRE UO_2SO_4 solutions is discussed. An evaluation of the optical stability of neutron-absorbing, cadmium borofluosilicate optical glasses following exposure to neutron flux is reported. A summary is presented of the chemical stability of materials considered for *Q*-coil construction.

Type-347 stainless steel is reported to be useful as a shadowcasting material for electron microscopy. A traveling stage of uniform movement to be used with a Welch Densitometer for measuring line intensities of electron diffraction patterns was designed and fabricated.

ANALYTICAL CHEMISTRY DIVISION
Y-12 SITE

Emphasis during the past quarter has been on the study and analysis of fluoride eutectics, both fuel and coolant eutectics, and on the determination of the products of the reaction between alkali hydroxides and metal containers at elevated temperatures, in connection with the analytical chemistry of the ANP program. Methods for the determination of boron in diatomaceous earths and for the removal of boron from diatomaceous earths have been investigated.

Cellulose column extraction methods have been studied with reference to the adaptation of these procedures to the separation and determination of uranium in low-grade ores. The separation of microgram quantities of thorium by column extraction has been tested.

Investigation of methods for the analysis of uranyl sulfate solutions used in HRE test Loops has continued. A method for the determination of uranium by direct titration with

[redacted]

[redacted]

[redacted]

chromous sulfate appears promising. The separation of uranium from trace elements by TBP extraction and the determination of the trace elements, especially in solutions of high uranium concentration (400 mg of uranium per ml), have been studied. Satisfactory methods have been developed for the determination of zirconium, ruthenium, and nitrogen.

A polarographic method for the determination of sulfide in heavy water has proved to be sensitive.

Analytical services were provided for ANP, HRP, Raw Materials Processing, and others. In the course of this work, which is briefly reviewed, 21,477 determinations were made during the quarter.

[redacted]

[redacted]

ANALYTICAL CHEMISTRY DIVISION — X-10 SITE

RESEARCH AND DEVELOPMENT

IONIC ANALYSES

P. F. Thomason

Differential Polarography (D. J. Fisher and M. T. Kelley). The fundamental equation of the polarographic wave is

$$E_{d.e.} = E_{1/2} - \frac{0.059}{n} \log \frac{i}{i_d - 1}, \qquad (1)$$

where $E_{1/2}$ is the value of $E_{d.e.}$ when $i = i_d/2$. The symbols are the same as those used by Kolthoff and Lingane[1] in reporting the work of J. Heyrovsky and D. Ilkovic. The equation can be written as

$$\ln \frac{i}{i_d - 1} = K(E_{1/2} - E_{d.e.}) , \qquad (2)$$

where $K = 2.30\ n/0.059$. Differentiation with respect to $E_{d.e.}$ gives

$$\frac{di}{dE_{d.e.}} = -K\left(i - \frac{i^2}{i_d}\right) . \qquad (3)$$

A second differentiation with respect to $E_{d.e.}$ results in the relationship

$$\frac{d^2}{d^2E_{d.e.}} = K \frac{di}{dE_{d.e.}} \left(\frac{2i}{i_d} - 1\right) . \qquad (4)$$

Setting Eq. 4, equal to zero, it is found that a minimum value of $di/dE_{d.e.}$ occurs when

$$\frac{di}{dE_{d.e.}} = 0 , \qquad (5)$$

and, $di/dE_{d.e.}$ passes through a maximum when

$$i = \frac{i_d}{2} , \qquad (6)$$

that is, at

$$E_{d.e.} = E_{1/2} . \qquad (7)$$

Also, the maximum value (peak) of $di/dE_{d.e.}$ is expressed by the equation

$$\left(\frac{di}{dE_{d.e.}}\right)_{max} = -\frac{Ki_d}{4} , \qquad (8)$$

and is therefore directly proportional to the concentration of the reducible ion.

Methods of differentiating the current that passes through a polarograph cell with respect to the voltage across it include (1) insertion of a small, superimposed alternating-current voltage in series with the direct-current voltage applied to the cell, with observation of the resulting alternating current,[2,3,4] (2) use of an RC or RL circuit of proper time constant,[5,6,7] and

(1) I. M. Kolthoff and J. J. Lingane, *Polarography*, p. 144, Interscience, New York, Rev. 1946.

(2) B. Breyer, F. Gutmann, and S. Hacobian, "Polarography with Alternating Currents. I. Outline of Theory, Apparatus, and Technique. II. Alternating Current Polarography of Cadmium, Zinc, Lead, Thallium, Indium, Bismuth and Antimony." *Australian J. Sci. Research* **A3**, 558 (1950).

(3) K. S. G. Doss and H. P. Agarwal, "Reduction Processes at the Dropping-Mercury Electrode in Pulsating Fields," *Proc. Indian Acad. Sci.* **33A**, 66 (1951).

(4) H. A. Laitinen, "Polarography," *Annual Review of Physical Chemistry* (ed. by Rollefson and Powell), I, 309, Annual Reviews, Stanford, Cal., 1950.

(5) S. Seely, *Electron-Tube Circuits*, p. 129, McGraw-Hill, New York, 1950.

(6) O. H. Schmitt and W. E. Tolles, "Electronic Differentiation," *Rev. Sci. Instruments* **13**, 115 (1942).

(7) P. Leveque and F. Roth, "Polarographie Differentielle avec Electrode Gouttante Unique," *J. chim. phys.* **46**, 480 (1949).

(3) use of synchronized multiple electrodes.[8] A fourth method proposed by this laboratory is, in principle, a separate Brown recorder connected to a direct-current tachometer that is mechanically geared to the Brown balance motor of the ORNL high-sensitivity polarograph.

The differential curve, $di/dE_{d.e.}$ as a function of $E_{d.e.}$, is expected to be of advantage in the polarographic analysis of solutions in which a reducible substance is present whose half-wave potential is close to that of the constituent being determined. With such solutions the waves obtained in ordinary polarography coalesce and the precision of the method may be very low. An example of an analysis of this type is the polarographic determination of uranium in first-cycle MTR U^{235}-recovery-process feed solutions because of the presence of copper.

It is not intended to use the third method for differentiating the current, since it seems less promising than the others. The other three methods are being investigated, evaluated relative to each other, and applied to the polarography of uranium in the presence of copper. A summary of the work follows.

Superimposed Alternating Current Method. A small alternating-current voltage source of 100 mv or less and 10-, 60-, or 100-cps frequency has been connected in series with the leads to the D.M.E. polarograph cell used with an ORNL high-sensitivity polarograph, Model Q-1160. The circuit diagram of the polarograph has been published.[9] To obtain polarograms by this method, the lead running from the current-range resistor-switch rotor (S_{5A}) to the RC damping circuit is opened to disconnect the Brown recorder and its amplifiers. the alternating-current voltage developed across the current-range resistor is taken off through a condenser and amplified with Ballantine voltage amplifiers. The phase of the amplified voltage is compared with the phase of the superimposed alternating-current-voltage source as a reference. An oscilloscope and also a type-320-A phase meter manufactured by the Technology Instrument Corporation are used to observe phase-difference changes occurring at various values of applied direct-current voltage. A study has indicated that the superimposed alternating-current method is not so good as the others, and further work with it is not planned at this time.

RC Differentiation. A simplified circuit of the portion of the ORNL high-sensitivity polarograph to be modified is shown in Fig. 1. The differentiation is accomplished by inserting the RC network shown in Fig. 2 at points X, X', and Y of Fig. 1. When the switch (Fig. 2) is open, a differential polarogram is recorded. A regular polarogram can be recorded when this switch is closed.

The voltage across R, e_R is approximately equal to $(RC)de_C/dt$, where e_C is the voltage across C. With proper values of R and C, e_R is approximately proportional to the time derivative of the input voltage. In the polarograph the amount of voltage scanned is directly proportional to time. Hence, the recorded curve becomes $di/dE_{d.e.}$ vs. $E_{d.e.}$ (with open switch, Fig. 2).

The damping circuit, R_6 and C_1, tends to integrate the differential voltage so that it does not decay

(8) J. Heyrovsky, "The Differential Polarographic Method with the Streaming Mercury Electrodes," *Chem. Listy* **40**, 222 (1946).

(9) M. T. Kelley, H. H. Miller, and W. H. Davenport, Jr., "A Polarograph for Analysis of Very Dilute Solutions (10^{-6} *M*)," *Chemistry Division Quarterly Progress Report for Period Ending March 31, 1950. Part II. Analytical Chemistry*, ORNL-686, Fig. 4, p. 26.

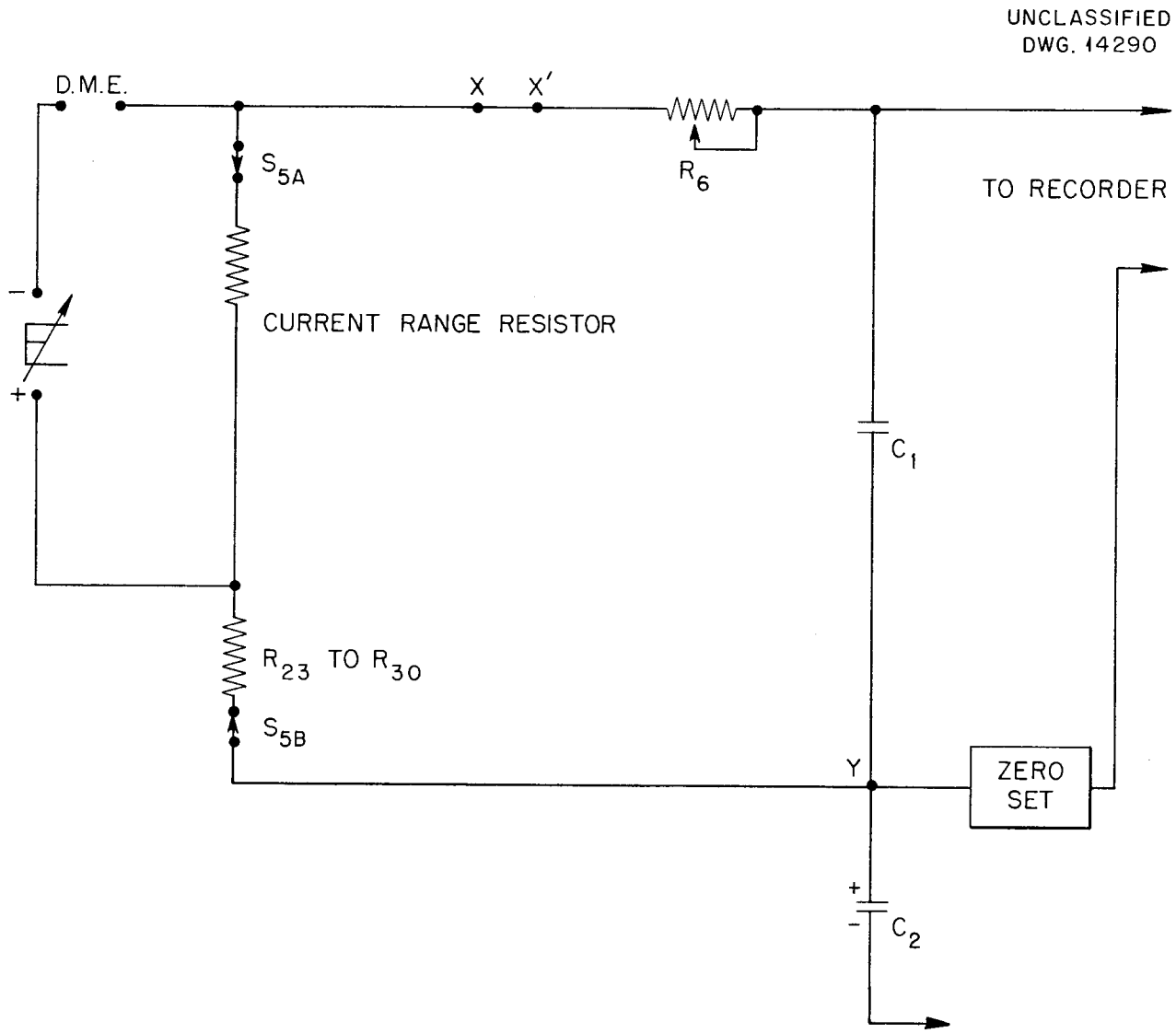

Fig. 1. Simplified Circuit of ORNL High-Sensitivity Polarograph as Modified to Permit Polarography by RC Differentiation.

rapidly following the top of the peak. Yet, it is necessary to use damping because of the increase of i with each growing mercury drop. Work is in progress to solve this problem. Also, the RC network itself tends to lag behind because of its time constant.

A study of the relative merits of various sizes of R and C (various time constants) was made. It is concluded that the optimum values for the circuit is shown are R = 1 megohm and C = 20 microfarods. During this study the range of the Brown recorder

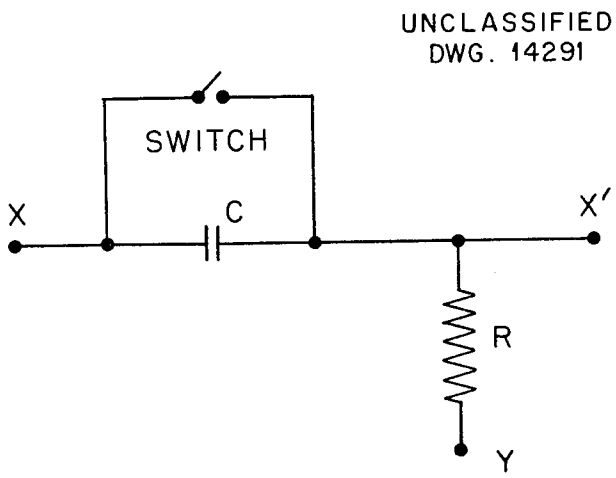

Fig. 2. RC Differentiating Network.

was changed from 0 to 5 mv to 0 to 1 mv, but the change was found to be unnecessary. If large values of *C* are used the circuit is unstable. The damping must remain constant since it affects the peak height. It is suggested that the *R* compensator be off. The drop time is of the order of 4 seconds. For the analysis of solutions containing about 50 μg of uranium(VI) per ml in 0.1 *M* HNO_3, a current range of 0.2 μa is suitable.

Figures 3 and 4 show, respectively, regular and RC differential polarograms of a solution containing 50 μg of uranium(VI) per ml with 3.5 μg of copper(II) per ml in 0.1 *M* HNO_3.

Preliminary work indicates that there may be some enhancing of the uranium peak if sufficient copper is present. It may be necessary to apply a correction based on copper peak height or on peak ratio by means of a standard series. Further work is in progress on the quantitative aspects of the RC method of differentiation.

Tachometer Method. It is planned to investigate the tachometer method during the next quarter.

Separation of Uranium for Analytical Purposes from Aluminum and Copper by Solvent Extraction (P. F. Thomason and L. T. Corbin). The U^{235} recovery process for the MTR requires a high degree of accuracy and precision in the determination of uranium in the feed solutions. Since these solutions are extremely radioactive, it is necessary to have a method adaptable to remote operation. The polarographic method[10] fulfills this requirement. Unfortunately, the feed solutions contain a small amount of copper present as an impurity in the aluminum alloy fuel assemblies. The polarographic wave for copper(II) precedes the uranium(VI) wave and makes it difficult to measure the uranium wave with a high degree of precision. For this reason it was thought that a separation of uranium from the copper and aluminum by tributyl phosphate solvent extraction[11] would not only eliminate this trouble but also make possible two other methods for the estimation of uranium. Both of these methods, namely, the automatic micropotentiometric titration[12] and the coulometric titration,[13] require the absence of nitrate ion. The removal of large quantities of nitrate from the $Al(NO_3)_3$ solutions by fuming with H_2SO_4 is very difficult because the $Al_2(SO_4)_3$ formed is not very soluble. However, the solvent extraction eliminates most of the aluminum and makes it a simple matter to convert the $UO_2(NO_3)_2$ to UO_2SO_4 by fuming with H_2SO_4. The

(10) M. T. Kelley, P. F. Thomason, L. T. Corbin, S. A. Reynolds, C. L. Burros, and E. J. Frederick, "Uranium-Polarographic Determination by Standard Addition" (Method 10), *Manual of Analytical Procedures for the U^{235} Recovery Process*, ORNL-983 (Aug. 20, 1951).

(11) *Ibid.*, "Uranium-Fluorometric Determination" (Method 12).

(12) F. J. Miller, "Automatic Micro Titrations," *op. cit.*, ORNL-686, p. 9.

(13) P. F. Thomason and M. T. Kelley, "Microcoulometric Titrations," *Analytical Chemistry Division Quarterly Progress Report for Period Ending June 26, 1951*, ORNL-1113, p. 6.

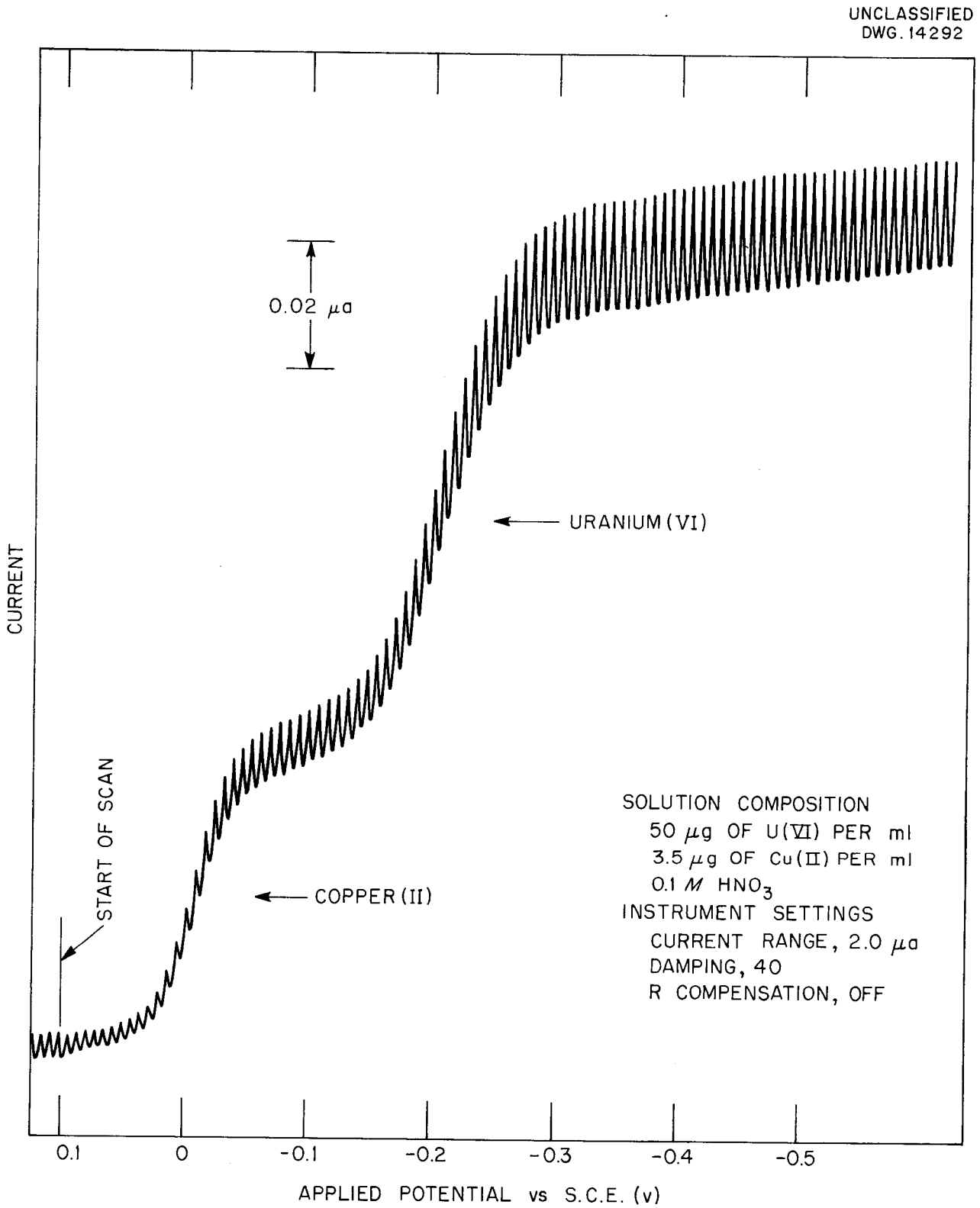

Fig. 3. Regular Polarogram of Uranium(VI) in the Presence of Copper(II).

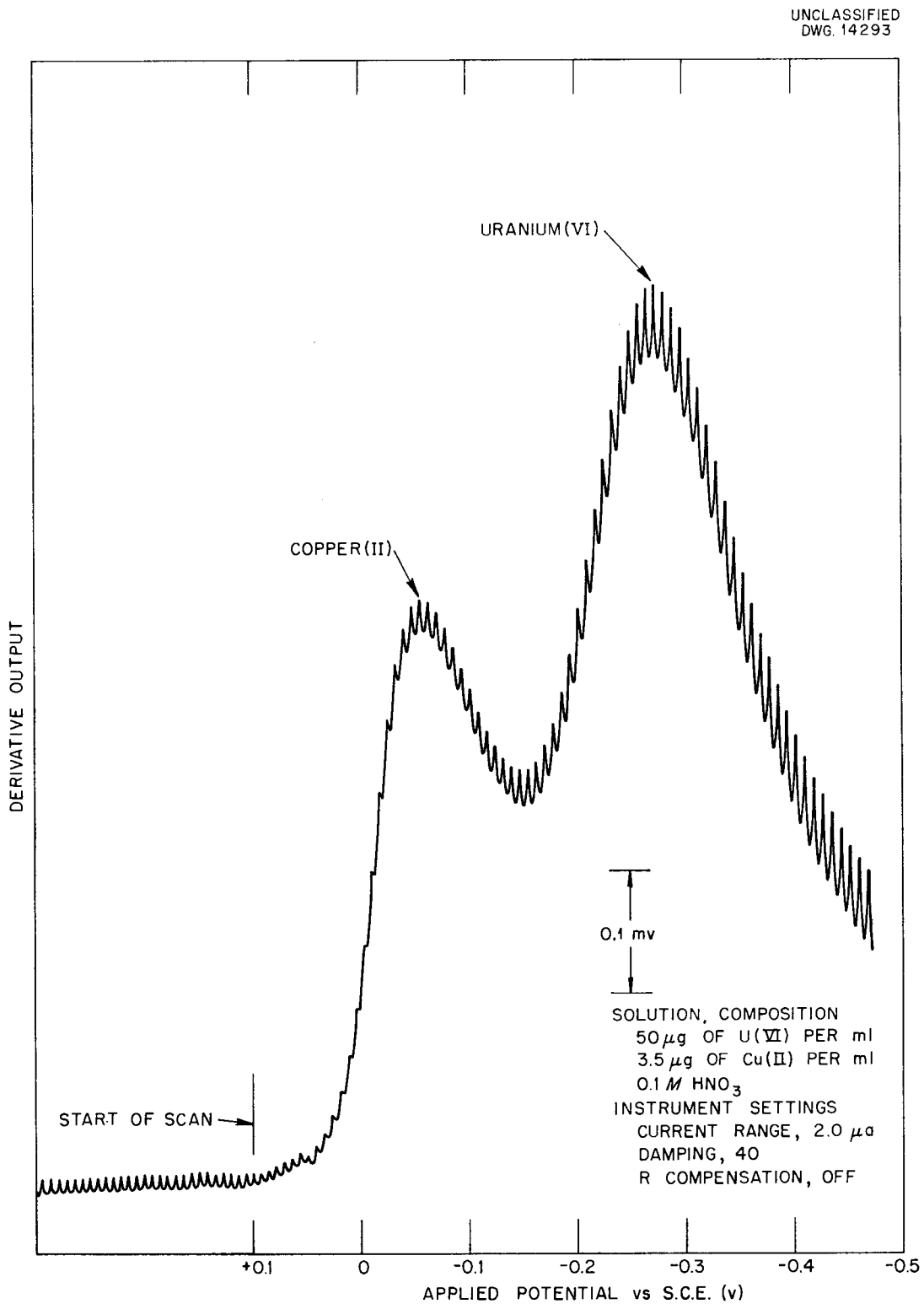

Fig. 4. RC Differential Polarogram of Uranium(VI) in the Presence of Copper(II). Solution and instrument setting same as for Fig. 3.

partial decontamination of the original feed solution sample by the solvent extraction is also an advantage, since the solution can then be handled more conveniently. The solvent extraction procedure would have to assure practically 100% recovery of uranium in order to meet the accuracy requirements. Therefore it was decided to determine how much uranium was recovered by the TBP-Varsol extraction procedure by using equal volumes of sample and organic solvent.

A synthetic MTR feed solution was made, with reagent-grade chemicals, that contained 1.3 *M* $Al(NO_3)_3$, 1 mg of uranium per ml and 0.07 mg of copper per milliliter. A 50-ml volume of this solution was made 2 *N* in HNO_3 and shaken with 50 ml of TBP-Varsol (30:70 vol %) for 5 min in a separatory funnel. The layers were allowed to separate, and the bottom aqueous layer was discarded. It was found necessary to strip the organic layer three times with 50 ml of distilled water before all the uranium was recovered. It was evident that the HNO_3 in the TBP-Varsol layer had to be stripped before the uranium could pass into the aqueous phase. Therefore several samples were run, with decreasing amounts of acid, to decrease the number of stripping passes and the volumes. The aqueous phases were analyzed by fuming with H_2SO_4 and titrating by the $Fe_2(SO_4)_3$ method.[14] The results are shown in Table 1. These data show that good recovery of uranium is not dependent upon the presence of HNO_3 when 1.3 *M* $Al(NO_3)_3$ is present. Also, it was found that one double-volume strip (100 ml) would pass all the uranium from the TBP-Varsol phase into the aqueous phase. However, a slight difficulty was experienced at all HNO_3 concentrations with emulsion formation, which made precise phase-separation difficult.

TABLE 1

Effect of HNO_3 Concentration on Recovery of Uranium from Synthetic MTR Sample by TBP-Varsol (30:70 vol %) Extraction

50 mg of uranium present in each sample

HNO_3 IN SYNTHETIC MTR SAMPLE (*M*)	URANIUM RECOVERED (mg)*	
	SAMPLE 1	SAMPLE 2
	50.40	50.30
0.5	49.37	49.53
1	48.13	48.44
2	48.59	49.16
5	49.06	49.99

*Total uranium found in aqueous strip.

It was found that isopropyl ether could be used as the diluent instead of Varsol to eliminate this trouble. The recovery of uranium was better than 99% with the use of isopropyl ether and with no HNO_3 present in the aqueous phase. In order to check the uranium losses, the uranium left in the aqueous layer after extraction and in the organic layer after stripping was determined by the fluorometric method. The results are shown in Table 2. These data show that very little loss occurs in each of the operations and that the larger loss is in the extraction step.

The decontamination effected by the extraction procedure was checked by adding a solution containing uranium-free radioactive fission products to the MTR synthetic feed solution. The two phases were analyzed for gross beta radioactivity after the extraction process. The results are shown in Table 3. These data show that a

(14) Kelley, Thomason, Corbin, Reynolds, Burros, and Frederick, "Uranium-Potentiometric Titration with Ferric Sulfate" (Method 11), *op. cit.*, ORNL-903.

TABLE 2

Uranium Losses to the Uranium-Depleted Synthetic MTR Aqueous Phase and the Stripped Organic Phase

50 mg of uranium present in each sample

PHASE	TOTAL URANIUM LOST (mg)	
	SAMPLE 1	SAMPLE 2
Aqueous (uranium-depleted MTR)	0.026	0.021
Organic	0.001	0.011

TABLE 3

Decontamination of MTR Feed Solution by Extraction with TBP-Isopropyl Ether (30:70 vol %)

Gross beta activity of MTR feed solution 1.43×10^5 cpm/ml

SAMPLE	PHASE	GROSS BETA ACTIVITY (10^4 cpm/ml)
1	Depleted aqueous	7.61
1	Stripped organic	7.91
2	Depleted aqueous	7.51
2	Stripped organic	7.34

decontamination factor of only 2 is obtained. Since a greater decontamination is desirable, several extractions were performed by using smaller amounts of TBP in the Varsol to determine the optimum TBP concentration that will effect the greatest decontamination consistent with 99+% uranium recovery. These results are shown in Tables 4 and 5. These data indicate that good uranium recovery is obtained with TBP-isopropyl ether (5:95 vol %) and that a decontamination factor of approximately 100 is realized.

The sample decontamination and uranium recovery achieved by the

TABLE 4

Effect of TBP Content of Isopropyl Ether in the TBP-Isopropyl Ether Extraction of Uranium from a Synthetic MTR Feed Solution

25.00 mg of uranium in each sample of MTR feed solution

SAMPLE	TBP IN ISOPROPYL ETHER (vol %)	URANIUM EXTRACTED FROM SAMPLE (mg)*
1	1	18.89
2	1	18.96
3	5	24.95
4	5	24.85
5	5	24.80

*Total uranium found in the aqueous strip.

TABLE 5

Decontamination of MTR Feed Solution by Extraction with TBP-Isopropyl Ether (5:95 vol %)

Gross beta activity of MTR feed solution, 1.42×10^5 cpm/ml

SAMPLE	GROSS BETA ACTIVITY (10^2 cpm/ml)*
1	8.5
2	9.9
3	0.12
4	0.13

*In the organic phase, not stripped.

TBP-isopropyl ether (5:95 vol %) extraction is satisfactory, and further work will be done to adapt the procedure to the microscale similar to that of the extraction for the fluorometric estimation of uranium.[15] Also,

[15] D. J. Fisher, "Elimination by Solvent Extraction of Copper Interference in Polarographic Uranium Determination: Polarography of Uranium in Nonaqueous Media," this report.

automatic potentiometric titrations of submilligram quantities of uranium in the aqueous strip will be performed. Polarographic data[15] have shown well-defined uranium waves obtained on the aqueous strip from TBP-isopropyl ether (30:70 vol %) extractions. The aqueous strips from TBP-isopropyl ether (5:95 vol %) will also be analyzed polarographically and by coulometric titration.[16]

Elimination by Solvent Extraction of Copper Interference in Polarographic Uranium Determination: Polarography of Uranium in Nonaqueous Media (D. J. Fisher). First-cycle MTR U^{235}-recovery-process feed solutions contain copper, which interferes strongly with the polarographic wave of uranium(VI). Therefore a polarographic method with greater precision than the method previously reported[17] is needed for the determination of uranium. Solvent extraction is of interest in this problem because solvents are known that will extract better than 99% of the uranium present, separate uranium from copper, and also simultaneously achieve favorable decontamination from fission products. The extraction procedure is being developed by P. F. Thomason.[18] The two solvent systems considered are: 30:70 vol % TBP-Varsol and mixtures of up to 30 vol % TBP in isopropyl ether. The polarography of 30:70 vol % TBP-Varsol uranium(VI) extract and of 30:70 vol % TBP-isopropyl ether uranium(VI) extract is reported in the following.

The extracts contained a uranium concentration of about 1 mg per ml of solution. It was necessary to dilute the extracts to about 50 μg of uranium per ml with a suitable dilution solvent and to add a suitable supporting electrolyte. The dilution solvents and supporting electrolytes were chosen to obtain a wave for uranium that could be measured with a precision of 1% or better. The extracts prepared from synthetic MTR solutions by P. F. Thomason[18] in his study of the separation of uranium from aluminum and copper by solvent extraction were used.

The uranium wave obtained by using the various solvent systems has a half-wave potential near the -0.18 v vs. S.C.E. observed in aqueous solutions. The ORNL high-sensitivity polarograph, Model Q-1160, was used. In all cases where a volatile dilution solvent was employed, a gas washer containing that solvent was placed in the purified nitrogen gas stream. A S.C.E. was used throughout as reference electrode. About 10 min was found sufficient to displace oxygen from the test solution by nitrogen-bubbling. Where well-formed waves were found, the relation between i_d and uranium concentration was investigated by determining calibration curves rather than by using standard addition.

TBP-Varsol Uranium Extract (30:70 vol %). The results of the study with TBP-Varsol extracts are summarized in Table 6. Only a small proportion of water is miscible with this extract, even in the presence of another solvent. The only useful polarographic medium found among those considered is a heated aqueous strip of the extract 0.1 *M* in HNO_3. This medium is prepared by shaking equal volumes of extract and of copper-free distilled water together for 5 min in a separatory funnel. After separation, the organic phase is discarded. The aqueous

(16) A. D. Horton, "Coulometric Determination of Uranium," this report.

(17) H. H. Miller, "Determination of the Accuracy of the Polarographic Method for Uranium Analysis in the 25 Process Feed Solutions," *op. cit.*, ORNL-686, p. 23.

(18) P. F. Thomason and L. T. Corbin, "Separation of Uranium for Analytical Purposes from Aluminum and Copper by Solvent Extraction," this report.

TABLE 6

Polarographic Study in Various Organic and Aqueous Solvents of Uranium Extracted with TBP-Varsol (30:70 vol %)

Concentration of uranium(VI) in extract usually 1000 μg/ml

Concentration of uranium(VI) in polarographic medium usually 50 μg/ml

DILUTION SOLVENT*	SUPPORTING ELECTROLYTE	EVALUATION OF MEDIUM
80:20 vol % ethanol-water	0.1 *M* NH_4NO_3	Fair wave
30:70 vol % TBP-Varsol	HNO_3**	No wave
Absolute ethanol	None	No wave
Absolute ethanol	HNO_3**	No wave
Absolute ethanol	0.1 *M* $(CH_3)_4NCl$	No wave
80:20 vol % dioxane-water	0.1 *M* NH_4NO_3	No wave
Equal vol. benzene-methanol	0.3 *M* LiCl	Poor wave
Glacial acetic acid	0.25 *M* $NH_4C_2H_3O_2$	Small, poor wave
Glacial acetic acid	0.25 *M* $NH_4C_2H_3O_2$ and HNO_3**	Small, poor wave
Glacial acetic acid	0.25 *M* $LiClO_4$	Poor wave
Equal vol. 1 *N* H_3PO_4 strip	1 *N* H_3PO_4	No wave
Equal vol. aqueous strip	0.1 *M* HNO_3	Double, TBP-complex wave
Equal vol. aqueous strip, heated	0.1 *M* HNO_3	Normal, well-defined wave
Equal vol. aqueous strip, heated, acidified, and then aged three days	0.1 *M* HNO_3	Normal, well-defined wave

*Solvent used to dilute the TBP-Varsol extract containing the uranium(VI).

**Used in various concentrations up to solubility limit of *M* HNO_3 in the organic phase.

phase, or aqueous strip, apparently contains TBP to the extent of the solubility of TBP in water. If an aliquot of this strip is acidified to 0.1*M* in HNO_3 as supporting electrolyte, a polarogram of it is unsatisfactory for analysis because of a double wave that is probably caused by TBP complexing of the uranium. If the aqueous strip is heated on a hot plate for 3 min prior to acidifying an aliquot with HNO_3, a normal, well-defined uranium wave can then be obtained. The heated and acidified strip is stable. Possibly the TBP or some impurity in TBP is removed through steam distillation by this heat treatment.

TBP-Isopropyl Ether Extract (30:70 vol %). Dilution with the uranium extraction solvent was found to be unsatisfactory, at least where either HNO_3 or $LiClO_4$ is used as supporting electrolyte. Various other dilution solvents were tried (Table 7). The two most satisfactory dilution solvents are an aqueous strip, heated and then acidified as described above, and glacial CH_3COOH. An equal volume of C_2H_5OH-H_2O mixture can also be used as dilution solvent.

As the water content of CH_3COOH is increased, the stability of the polarographic medium in the presence of mercury decreases. With fresh glacial CH_3COOH this difficulty is not experienced. If anhydrous CH_3COOH were used, a chloranil reference electrode might be employed. The representative polarogram included with this report (Fig. 5) is for 40 μg of uranium(VI) per ml in glacial CH_3COOH, with 0.25 *M* $LiClO_4$ as supporting electrolyte. The relation of diffusion current, i_d, to uranium concentration is nearly linear in this solvent.

The aqueous strip procedure is the same as outlined above. Normal, well-defined waves are obtained with the heated strip. From the evidence examined it appears that TBP is the source of the double, complex wave in the unheated strip. The interference in the unheated aqueous strip is not affected by prolonged nitrogen gas bubbling, nor is it caused by traces of isopropyl ether.

Where equal volume C_2H_5OH-H_2O is used as dilution solvent, 0.5 *M* HNO_3 is a satisfactory supporting electrolyte. The concentration of HNO_3 is not critical, but it must be constant since it influences the wave height. The residual current part of the polarograms is not parallel to the limiting current. The *R* compensator can be utilized to bring the limiting current part parallel to the chart coordinate axis. If a deaerated solution is allowed to stand in the polarograph cell in the presence of mercury while a series of polarograms are run over a time interval, the wave height increases with time. These solutions appear stable over several days when kept in glass in the absence of mercury. Polarograms made with a blank indicate that mercury may be going into solution. If the dissolution of mercury were the source of this instability, it may be that after the concentration of mercury increases beyond a certain point its wave interferes with the uranium wave. In the cases of several dilution solvents, this effect made the solvents useless. The effect is slow enough in equal volume C_2H_5OH-H_2O solvent 0.5 *M* in HNO_3 so that with reasonable care in limiting the time of mercury contact it is possible to obtain reproducible results.

Further polarographic studies may be made when the optimum composition of the uranium(VI) extraction solvent has been developed. A decreased amount of TBP in the mixture probably will not greatly change the relative merits of the media discussed above.

Coulometric Determination of Uranium (A. D. Horton, P. F. Thomason, M. T. Kelley). The coulometric titration of iron(II) with electrolytically generated cerium(IV) has been described by Thomason and Kelley.[13] Coulometric titrations are of advantage because they permit accurate determination of microgram quantities of certain substances, and they should be ideal for determining microgram quantities of uranium in highly radioactive solutions. Another advantage of the method is that it permits consecutive titration of samples without requiring renewal of the titrant. The prime limitation of the method is the requirement that the titrant be generated

TABLE 7

Polarographic Study in Various Organic and Aqueous Solvents of Uranium Extracted with TBP-Isopropyl Ether (30:70 vol %)

Concentration of uranium(VI) in extract usually 1000 μg/ml

Concentration of uranium(VI) in polarographic medium usually 50 μg/ml

DILUTION SOLVENT[a]	SUPPORTING ELECTROLYTE	EVALUATION OF MEDIUM
30:70 vol % TBP-isopropyl ether	0.1 *M* HNO_3	No wave
30:70 vol % TBP-isopropyl ether	0.25 *M* $LiClO_4$	Very small wave
Equal vol. ethanol-water	0.1 *M* HNO_3	Fair wave
Equal vol. ethanol-water	0.1 *M* HNO_3 0.1 *M* NH_4NO_3	Fair wave
Equal vol. ethanol-water	0.2 *M* HNO_3 0.1 *M* NH_4NO_3	Fair wave
Equal vol. ethanol-water	0.2 *M* HNO_3	0.6 *M* HNO_3 gave best wave, residual current not parallel to limiting current, diffusion current varies with HNO_3 concentration[b]
Equal vol. ethanol-water	0.4 *M* HNO_3	
Equal vol. ethanol-water	0.6 *M* HNO_3	
Equal vol. ethanol-water	1 *M* HNO_3	
Equal vol. ethanol-water	0.5 *M* HNO_3	Related i_d to uranium concentration nearly linear[b]
Equal vol. methanol-water	0.5 *M* HNO_3	(c)
80:20 vol % dioxane-water	0.25 *M* $LiClO_4$	No wave
80:20 vol % acetone-water	0.25 *M* $LiClO_4$	Fair, but high wave
80:20 vol % acetone-water	0.3 *M* HNO_3	(c)
80:20 vol % acetone-water	Acidified with HNO_3	Fair wave
Equal vol. ethanol-formamide	0.25 *M* $LiClO_4$	No wave
25:25:50 vol % ethanol-formamide-water	0.125 *M* $LiClO_4$	No wave

[a] Solvent used to dilute the TBP-isopropyl ether extract containing the uranium(VI).

[b] Wave height varies slowly with time of mercury contact. Can be used if time is controlled.

[c] Wave height varies rapidly with time of mercury contact. Low precision.

TABLE 7 (continued)

DILUTION SOLVENT[a]	SUPPORTING ELECTROLYTE	EVALUATION OF MEDIUM
Acetonitrile	0.25 *M* $LiClO_4$	Fair wave
90% formic acid	0.25 *M* $LiClO_4$	Fair wave
20:72:4 vol %[d] ethanol-nitromethane-water	0.25 *M* $LiClO_4$	No wave
80:20 vol % 90% formic acid-water	None	Fair wave
80:20 vol % 90% formic acid-water	0.25 *M* $LiClO_4$	(*c*)
80:20 vol % glacial acetic acid-water	0.25 *M* $LiClO_4$	(*c*)
Glacial acetic acid	0.25 *M* $LiClO_4$	Good wave, nearly linear relation i_d to uranium concentration, high wave
Ethylene glycol monoethyl ether	0.25 *M* $LiClO_4$	(*c*)
Ethylene monobutyl ether	0.25 *M* $LiClO_4$	No wave
Equal vol. water-ethylene glycol monobutyl ether	0.12 *M* $LiClO_4$	No wave
Ethylene glycol monomethyl ether	0.25 *M* $LiClO_4$	(*c*)
Ethylene glycol monophenyl ether	0.25 *M* $LiClO_4$	Wave well-defined and stable, but small
Ethylene glycol diethyl ether	0.25 *M* $LiClO_4$	No wave
Diethylene glycol monoethyl ether	0.25 *M* $LiClO_4$	Very small wave
Diethylene glycol monomethyl ether	0.25 *M* $LiClO_4$	No wave
Diethylene monobutyl ether	0.25 *M* $LiClO_4$	(*c*)
Diethylene glycol diethyl ether	0.25 *M* $LiClO_4$	No wave
Dowanol-1 (ethylene glycol monophenyl ether)	0.25 *M* $LiClO_4$	Small wave, linear plot, stable
90:10 vol % Dowanol-1-water	0.25 *M* $LiClO_4$	Better defined without water
Equal vol. aqueous strip	0.1 *M* HNO_3	Double, TBP-complex wave
Equal vol. aqueous strip, heated	0.1 *M* HNO_3	Good wave, normal

[d] The remaining 4% is the organic extract, the volume of which is negligible in the other dilution solvents.

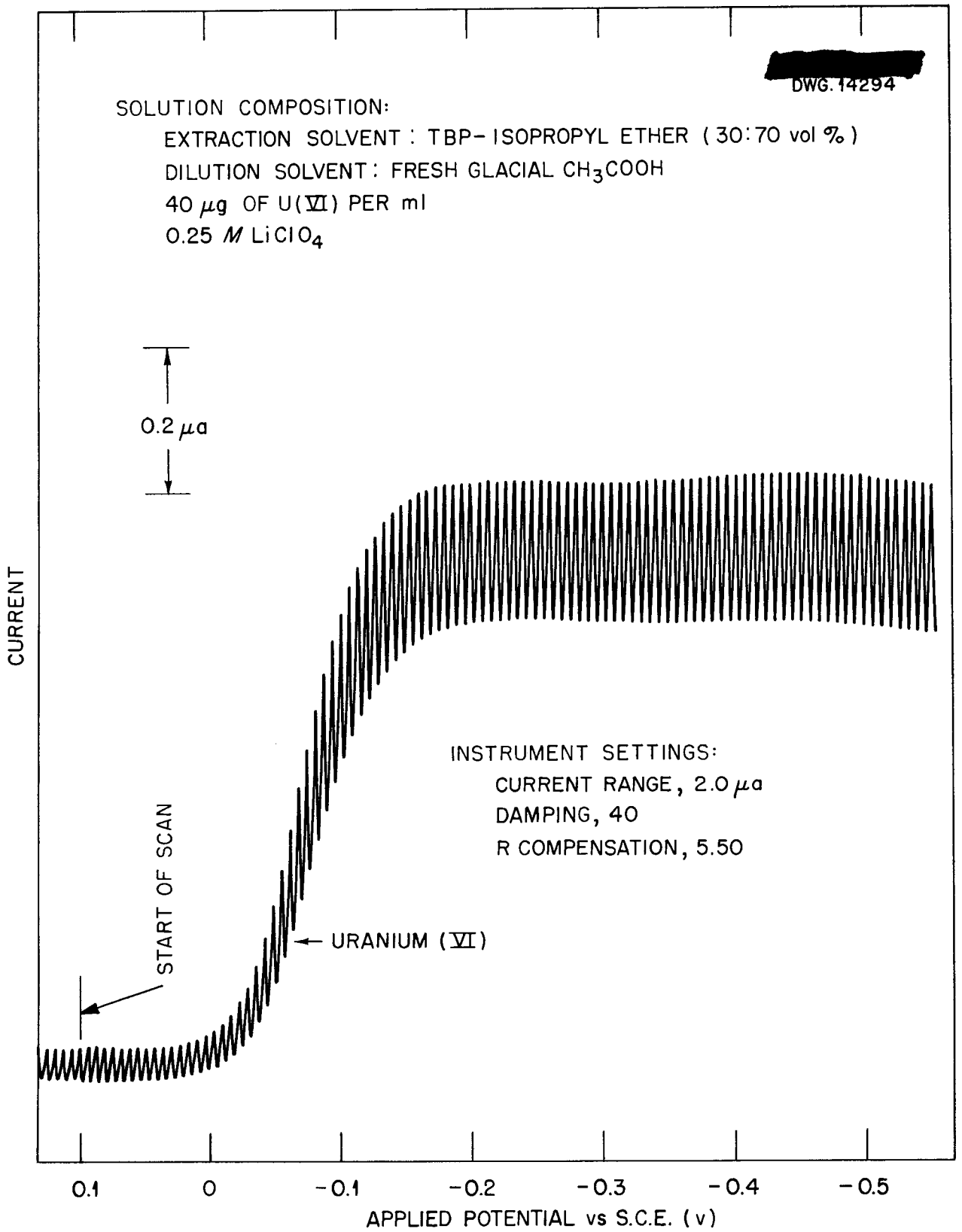

Fig. 5. Polarogram of Uranium(VI) in Glacial Acetic Acid Medium.

with 100% current efficiency. This limits the number of titrants that may be used. Also, the volume of sample is limited by the cell capacity.

A possible method for determining uranium is to convert the uranium to the quadrivalent state and add it to a cell containing $Ce_2(SO_4)_3$ and $NH_4Fe(SO_4)_2$ in which the uranium(IV) would react with the iron(III) to produce iron(II) that could be titrated with electrolytically generated cerium(IV). The reactions are:

$$U(IV) + 2\ Fe(III) = U(VI) + 2\ Fe(II)$$

$$Fe(II) + Ce(IV) = Fe(III) + Ce(III)$$

Evaluation of Reduction Apparatus. Total conversion of the uranium to uranium(IV) is a prerequisite to the coulometric determination, and therefore those systems that convert uranium to valence states other than uranium(IV) are not suitable. The Jones Reductor is not acceptable because of its tendency to reduce part of the uranium to uranium(III). Several methods were investigated in an effort to establish one for the rapid conversion of the total uranium to uranium(IV).

A lead reductor with 20 to 100 mesh lead in a column 12 mm by 30 cm is described by Sill.[19] This column is reported to effect the complete reduction of macroquantities of uranium(VI) to uranium(IV) in a reasonable length of time. A microcolumn, 3 mm by 11 cm, for reduction of approximately 250 μg of uranium(VI) was constructed but was too slow to be practical. The lead reductor requires the use of HCl for washing the column, which is a disadvantage since it is desirable to maintain an all-sulfate system. Also, the necessity for minimizing dilutions and total solution volumes eliminates further consideration of the lead reductor.

The apparatus shown in Fig. 6 was designed for use in further reductor experiments. A pyrex tube (7 mm by 11 cm) was sealed to a 1-mm ID stopcock. The capacity of the tube is approximately 1.5 milliliter. A variable-speed stirring motor with an adapter fitted with Allen setscrews was used for rotating the reducing couple and coil described below.

A silver-cadmium couple was constructed by spot welding a strip of cadmium sheet 1/8 in. by 2 1/2 in. and a strip of sheet silver of equal size into a thermocouple type of joint. The couple was rotated in 1 ml of 1 *N* H_2SO_4 containing 250 μg of uranium(VI). One hour was required for complete reduction of the uranium(VI) to uranium(IV), and the amount of reduction was determined by titrating the reduced uranium with standard $Ce(SO_4)_2$ solution and using ferroin as an indicator. Amalgamation of the cadmium strip of the couple and removal of dissolved oxygen from the solution by CO_2-bubbling did not appreciably decrease the reduction time. This couple was considered unsatisfactory.

A coil (4 mm by 8 cm) of 22-gage copper wire was plated with cadmium, and the silver strip from the couple was inserted inside the coil. By rotation of the coil in the solution, the reduction of 250 μg of uranium(VI) contained in 1 *N* H_2SO_4 was complete in 15 minutes. About 6% overreduction of the uranium was indicated (Table 8). The silver strip was removed from the coil, and the experiment was repeated. The amount of reduced uranium agreed closely with the theoretical amount (Table 8). In both experiments the

[19] C. W. Sill and H. E. Peterson, *The Volumetric Determination of Small Quantities of Uranium Using the Lead Reductor*, Bureau of Mines, Salt Lake City, Utah. Files of P. F. Thomason.

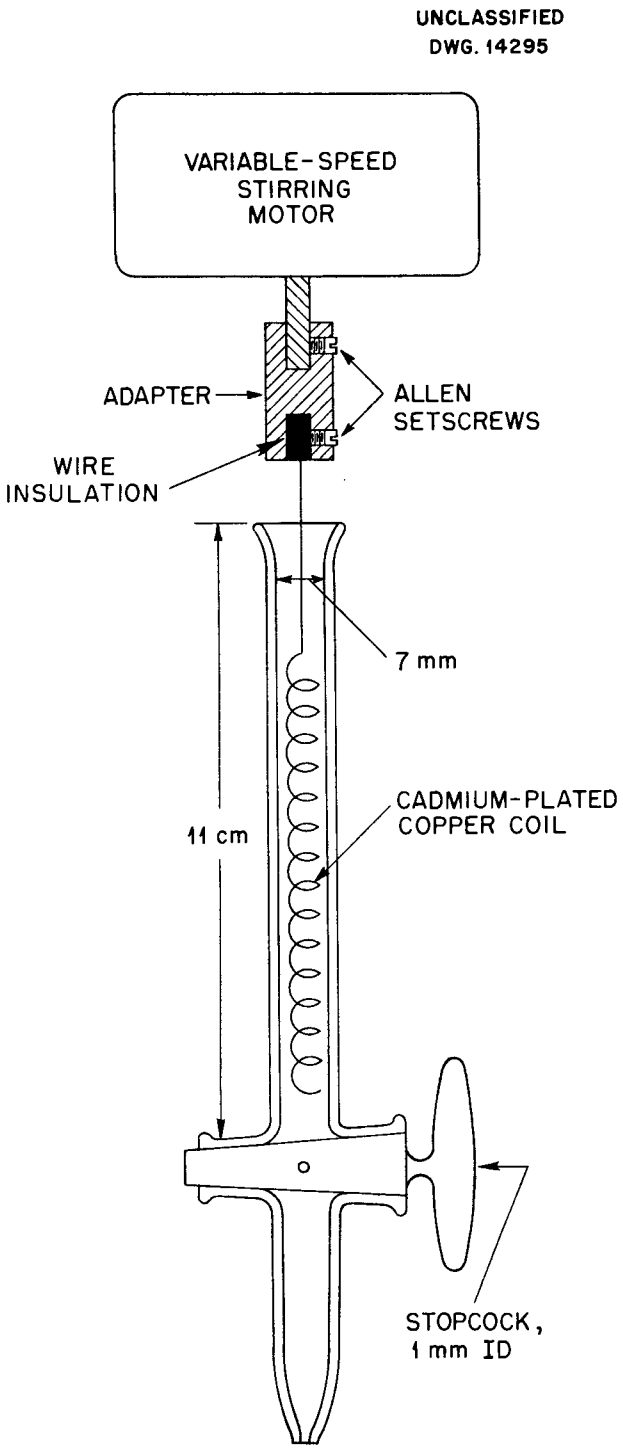

Fig. 6. Microreduction Apparatus.

TABLE 8

Reduction of Uranium(VI) to Uranium(IV) with Cadmium-Plated Copper Coil

Sample volume, 1.0 ml

Uranium in sample volume, 250 μg

Solution 1 N in H_2SO_4

1 μl of 0.0965 N $Ce(SO_4)_2$ $\approx$ 11.48 μg of uranium

REDUCTION TIME (min)	VOL. OF 0.0965 N $Ce(SO_4)_2$ REQUIRED TO TITRATE REDUCED URANIUM (μl)	REDUCED URANIUM (μg)
Silver Strip Inserted in Coil		
5	16.0	183.7
10	20.5	235.3
15	23.0	264.0
15	23.0	264.0
Silver Strip Removed from Coil		
15	22.4	257.2
15	22.0	252.6
15	21.8	250.3

solution was degassed with CO_2 and the reduction was carried out in a CO_2 atmosphere.

Evaluation of Coulometric Titration. The coulometric cell[13] was charged with 2 ml of saturated $Ce_2(SO_4)_3$ solution 3 N in H_2SO_4 and diluted to 6 ml with 1% $NH_4Fe(SO_4)_2$ solution. A 0.1-ml vol of 1 N H_2SO_4 solution containing 25 μg of uranium(VI) was pipeted into the reduction apparatus, degassed with nitrogen, and reduced with the cadmium-plated copper coil in a nitrogen atmosphere. The solution containing the reduced uranium was drained from the reductor into the coulometric cell, and the iron(II) from the reaction was titrated to the

amperometric[20] end point with electrolytically generated cerium(IV).

The titration curves obtained for the few runs attempted were too erratic to produce reliable results. Most of the erratic tendency is attributed to the instability of the recording circuit, which results from the use of a stationary platinum electrode. It is expected that a rotating platinum electrode[20] will improve the stability of the circuit, and one is being constructed.

Continuous Analysis of TBP Solutions for Uranium (J. M. Chilton). A request was received from the ore extraction plant of the Essential Materials Processing Site for suggestions for a continuous recording determination of uranium in TBP solutions. It was felt that an optical measurement of the light absorbed by the uranyl ion might be applicable if the solution contained no suspended material or emulsion.

Solutions of UNH in TBP were made to contain from 20 to 25% TBP by volume and were 80 to 90% saturated with UNH. The absorption spectra of these solutions were determined with a Beckman Model DU spectrophotometer, and the maximum absorption was found to be 415 millimicrons. The solutions were analyzed for uranium content, and the data were correlated to determine the effect of varying the TBP concentration.

It was found that if the TBP solution were saturated with concentrated HNO_3, yellow decomposition products were formed after a period of time. If 2 *N* HNO_3 were used, no decomposition was noticed. Sufficient data were obtained by the use of 2 *N* HNO_3 to indicate that Beer's Law held over the range of 80 to 90% UNH saturation and that slight variations in TBP concentration had no effect on the extinction coefficient. The optimum light path was calculated to be 1.25 to 1.50 millimeter.

Determination of Aluminum in RaLa Process Samples (J. M. Chilton). A study was made of a fluorometric method for the determination of microgram amounts of aluminum in samples to be received from the RaLa process. The procedure studied was originally proposed by White and Lowe,[21] and it was modified by Kavanagh.[22] The fluorometric reagent used is "morin," 3,5,7,2′,4′-pentahydroxyflavone. The ORNL fluorophotometer, Model No. Q-790, for liquid samples was used. The samples were placed in ordinary pyrex test tubes 13 by 100 millimeters. Determinations were made of amounts of aluminum from 0.05 to 6.0 μg per sample. Although the method showed sufficient sensitivity, even at the lower concentrations, the reproducibility was extremely poor. Since variations of ±100% were encountered in the instrument readings, the investigation was not continued; therefore the reason for the variations was not determined. However, it is thought that the instrument was partially responsible.

An investigation was made of the possibility of adapting a volumetric titration of aluminum to microgram quantities. The procedure of Snyder,[23] which involves the formation of the fluoride complex and the subsequent titration of the OH^- ion released, was followed. This procedure, as originally reported, is applicable to

(20) Kolthoff and Lingane, *op. cit.*, p. 475.

(21) C. E. White and C. S. Lowe, "Determination of Aluminum by Photometric Fluorescence Measurement," *Ind. Eng. Chem., Anal. Ed.* **12**, 229 (1940).

(22) F. Kavanagh, "New Photoelectric Fluorimeter and Some Applications" *Ind. Eng. Chem., Anal. Ed.* **13**, 108 (1941).

(23) L. J. Snyder, "Rapid Volumetric Method for Aluminum," *Ind. Eng. Chem., Anal. Ed.* **17**, 37 (1945).

samples containing 25 to 130 mg of aluminum. The procedure was checked by using samples of 22.5 and 45 mg of aluminum, and satisfactory precision was obtained. The procedure was modified to employ smaller volumes of reagents and more dilute standard acid and was found to be applicable over the range 1 to 100 milligrams. Details of the procedure have been recorded. It is felt that the use of microburets and electrometric measurement of pH will extend the applicability of the method to smaller quantities of aluminum, and an investigation will be made.

Determination of Cobalt in Aluminum Alloy (F. J. Miller). An aluminum alloy containing 1% or less of cobalt and manganese was submitted for cobalt determination. The sample was weighed and dissolved in HCl, and the solution was made to a known volume. To separate the cobalt from aluminum and manganese, aliquots were made 9 *N* in HCl and passed through an ion exchange column of Dowex-1 resin.[24] The aluminum and manganese were washed through with 9 *M* HCl; the cobalt was then eluted with 0.1 *M* HCl and titrated potentiometrically with $K_3Fe(CN)_6$ in ammoniacal solution under nitrogen atmosphere. The results were in agreement with those obtained by spectrographic and activation analyses.

Factors Affecting the Potentiometric Titration of Small Amounts of Plutonium (F. J. Miller). A study of the factors influencing the accuracy and precision of the potentiometric titration of plutonium with $Ce(SO_4)_2$ is being continued. Samples have been submitted chiefly by D. C. Overholt's isolation processes group of the Chemical Technology Division.

The accuracy of the titration has been improved by the use of a new standard plutonium solution. The standard solution was made from plutonium metal received from Los Alamos. The metal was cleaned,[25] weighed, and dissolved in HCl, and the solution was made to a known volume.

It was found that large amounts of chloride ion interfered in the ceric titration. To eliminate this interference, a portion of the standard solution was converted to the sulfate by fuming at 325°C with H_2SO_4. This portion was made to volume with 0.1 *N* H_2SO_4, and aliquots were taken from it for titration. The value determined by titration checked with the known value to better than 0.1% (Table 9).

It was desired to improve the shape of the titration curve in order to increase the precision of the titration. The upper portion of the curve shows a single shift in potential and gives an excellent indication of the plutonium end point, but the lower portion of the curve that indicates the oxidation of excess chromium(II) remaining after the plutonium(IV)-plutonium(III) reduction shows two, and sometimes three, plateaus. The effect of these multiple breaks on the precision of the titration may be minimized by use of the first break as the end point.

It is thought that the multiple break is caused by the failure of the platinum indicator electrode to follow the chromium(II)-chromium(III) oxidation in a sulfate medium. The addition of europium to the solution has been suggested as a remedy by K. A. Kraus of the Chemistry Division. Some improvement was noted in the

(24) K. A. Kraus and G. E. Moore, private communication, December 1951.

(25) H. E. Boaz, *et al.*, "Chemical and Spectrochemical Analysis of Uranium and Plutonium Materials," LA-416 (Oct. 1, 1945).

TABLE 9

Determination of Plutonium by Ceric Sulfate Titration

Aliquot titrated: 200 μl of 1:2 dilution of plutonium solution

Titrant: 0.0693 N $Ce(SO_4)_2$ solution

ALIQUOT	CHART TRAVEL (in.)	d	d^2	STANDARD DEVIATION	PLUTONIUM FOUND (mg/ml)	PLUTONIUM TAKEN (mg/ml)
1	11.39	+0.10	100	0.07	2.294	2.292
2	11.22	-0.07	49			
3	11.23	-0.06	36			
4	11.32	+0.03	9			
5	11.30	+0.01	1			

shape of the curve, but the multiple plateaus were not completely eliminated. The use of $CrCl_2$ instead of $CrSO_4$ was also suggested. Since only small amounts of $CrCl_2$ would be used, the plutonium end point would not be seriously impaired. The use of $CrCl_2$ improved the chromium(II)-chromium(III) break, but again did not completely eliminate the multiple plateaus.

A slow, negative drift in potential was observed to occur following the plutonium end point. At first, the drift was attributed to solution of iron from the glass-enclosed, magnetic stirring bar. Since microscopic examination of the bar precluded this possibility, the purity of the reagents was investigated. The same potential drift would be observed if the ceric solution that was used as a titrant contained small amounts of nitrates. A new $Ce(SO_4)_2$ solution was made by fuming CeO_2 with H_2SO_4 to destroy nitrates, and then filtering and diluting the filtrate to volume. This ceric solution was satisfactory – no negative drift in potential was observed following the plutonium end point. Later evidence showed that the CeO_2 contained iron, but, since the iron is already oxidized in the ceric solution, its presence does not interfere in the titration.

Most samples submitted for plutonium assay contain iron in a quantity small enough to permit an insignificant correction to be made. Samples now being received contain so much iron that the necessary correction entirely negates the precision of the titration. Consideration is being given to a separation of the iron from plutonium, either by electrolysis with a mercury-on-silver cathode as described by R. B. Hahn[26] or by a LaF_3 precipitation of the plutonium.

Reductimetric Titration of Plutonium in Nitrate Solution (F. J. Miller). The possibility of titrating plutonium potentiometrically from plutonium(IV)

(26) R. B. Hahn, "Separations with a Micro Mercury Cathode," unpublished paper. Files of P. F. Thomason.

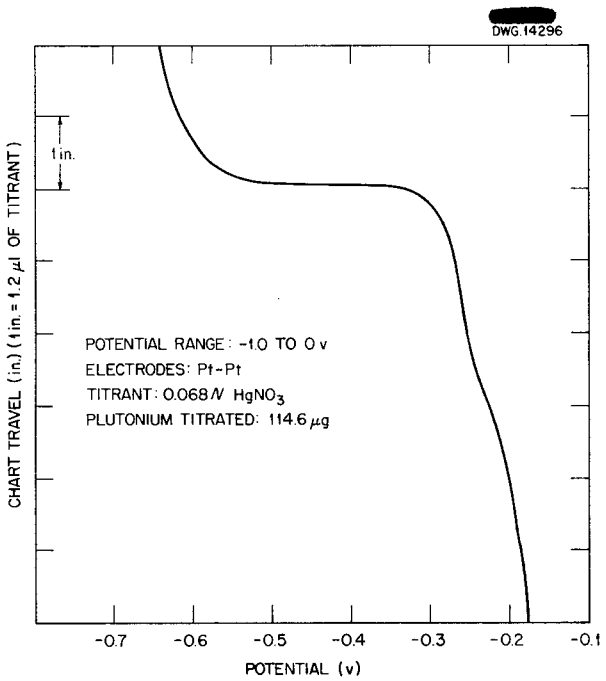

Fig. 7. Automatic Potentiometric Titration of Plutonium(IV) with Mercurous Nitrate.

to plutonium(III) with $HgNO_3$ in the presence of an excess of NH_4CNS in HNO_3 medium is being considered. The procedure is essentially that given by Belcher and West[27] for the titration of iron. Since the potential of the plutonium(IV)-plutonium(III) couple in HNO_3 is very similar to that of the iron(III)-iron(II) couple, it was assumed that the reactions would be similar. Evidence has been obtained that plutonium can be titrated in this manner (Fig. 7).

Belcher and West used the disappearance of the red $Fe(CNS)_3$ color as the end point of the iron titration. Potentiometric titrations of plutonium indicate that the disappearance of the color coincides with the potentiometric end point. Values calculated from standard solutions show that the end point is stoichiometric. The plutonium thiocyanate complex is not so strongly colored as the ferric complex; therefore the potentiometric method is preferable for titrating plutonium.

Plutonium(IV) and iron(III) were titrated together to ascertain whether both ions could be determined simultaneously (Fig. 8). The iron is titrated first, as indicated by the disappearance of the $Fe(CNS)_3$ color, but the potential shift at this point is insufficient for an end point indication. It may be possible to do a simultaneous determination by marking

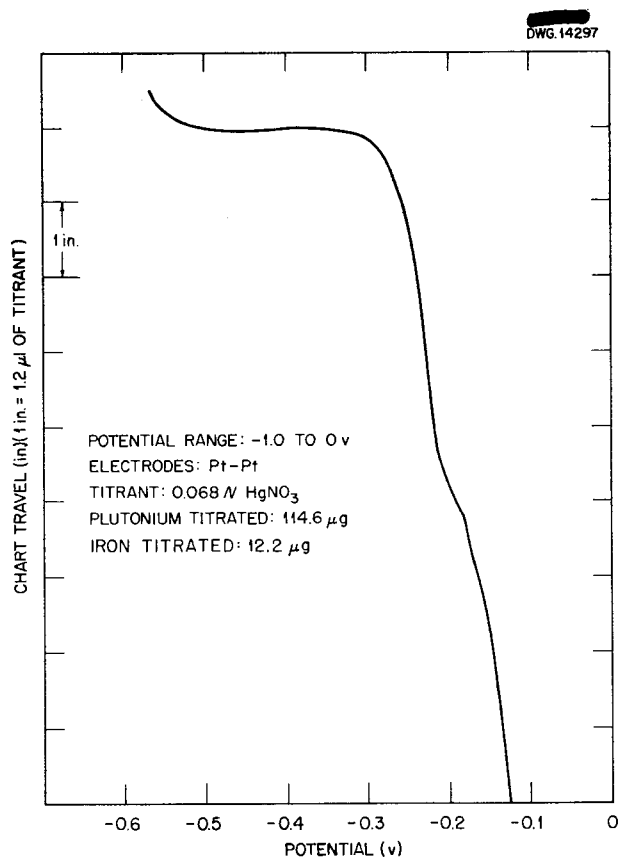

Fig. 8. Automatic Potentiometric Titration of Iron(III) and Plutonium(IV) Simultaneously with Mercurous Nitrate.

(27) R. Belcher and T. S. West, "Mercurous Nitrate as a Reductimetric Reagent. I. Stoichiometry of the Reaction," *Anal. Chim. Acta* V, 260 *et seq.* (1951).

the chart at the point where the $Fe(CNS)_3$ color disappears from the solution, or by increasing the potential shift. Further work is planned.

Polarographic Behavior of Chromium(VI) and Vanadium(V) in Lithium Hydroxide Solution (H. H. Miller). The possibility of polarographically analyzing LiOH for submicrogram amounts of chromium and vanadium impurities was of interest. To avoid decreasing the concentration of the impurities by dilution of the sample, it was advantageous to use the LiOH solution as the supporting electrolyte. This possibility appeared promising, since Kolthoff and Lingane[28] have stated that chromium(VI) gives a well-defined wave in 1 *M* NaOH with a half-wave potential of -0.85 v vs. S.C.E., and vanadium(V) gives a wave, though poorly defined, in LiOH solution at -1.7 v vs. S.C.E.

A solution of 10 μg of chromium(VI) per ml in 0.5 *M* LiOH was polarographed, and a fairly well-defined wave was found at about -0.45 volt. However, a small, unexplained wave always preceded the chromium(VI) wave. Although no wave was found for the vanadium(V), the hydrogen wave appeared to shift to a more positive potential and indicated that the vanadium(V) probably was being reduced at such a negative potential that its wave coincided with the hydrogen wave. It was concluded that chromium(VI) could be determined in this medium but that vanadium(V) could not be determined. If it is necessary to carry this study further, other supporting electrolytes will be tried, and polarograms of solutions of low concentrations of chromium and vanadium will be made.

[28] Kolthoff and Lingane, *op. cit.*, p. 291, 296.

Colorimetric Determination of Versene (J. H. Chilton). A request was received from the RaLa group for analysis of Versene solutions, approximately 0.001 *M*. The colorimetric method proposed by the manufacturer[29] was investigated and found to give erratic results unless extreme care was given to the amount of excess reagents used. Modification of the procedure to use an acidic solution instead of the proposed alkaline medium gave a satisfactory method for control work. The modified procedure instructions were distributed to the control laboratories that carry out Versene determinations.

Polarographic Determination of Thallium (H. H. Miller). A NaI crystal sample was received from P. R. Bell, Physics Division, for the determination of traces of thallium. The polarographic method was used because of its sensitivity. The sample was finely ground and dissolved in a small amount of HNO_3. Since I^- gives an anodic wave at zero potential, it was necessary to remove all the I^-. This was accomplished by heating 0.100 g of the sample in approximately 0.5 ml of concentrated HNO_3. The sample dissolved readily because NaI and TlI are soluble in HNO_3; the iodide is volatilized as I_2. This solution was polarographed, and a well-defined thallium(I) wave was found.

Another sample was received from H. J. McDuffie, Chemistry Division, for the determination of the microgram amount of thallium in a solution containing milligram quantities of uranium. Because there is insufficient separation of the half-wave potentials of thallium(I) ($E_{1/2}$ = -0.48 v vs.

[29] "The Versenes," *Tech. Bull. No. 2*, Sec. III, p. 3, Bersworth Chemical Co., Framingham, Mass., 1950.

S.C.E.) and uranium(VI) ($E_{½}$ = -0.1 v vs. S.C.E.) and because of the large excess of uranium present in the sample, it was necessary to use a supporting electrolyte that gave no uranium wave, i.e., 1.0 *M* NaOH. The uranium(VI) was complexed with Na_2CO_3 before the addition of the NaOH solution to prevent its precipitation. After the addition of the NaOH, the solution was polarographed and thallium determined by the standard addition method.

Determination of Selenium (J. H. Chilton). A request was received from the radioisotope production group for the determination of the concentration of a selenium solution. Since an analysis by the pyrrole method was unsuccessful, a modification of the method of Snell and Snell,[30] based on the reduction to the metal by stannous chloride, was developed.

Determination of Antimony (J. H. Chilton). A request was received from the radioisotope production group for the determination of the concentration of an antimony solution. The colorimetric method of Snell and Snell[31] using the KI complex was checked and found to give excellent results. It has been suggested that the wavelength at which measurements are made be changed from 420 to 425 mμ, since the complete optical spectrum of the system was measured and showed greater absorption at that wavelength.

Vacuum Fusion Analysis (W. J. Wolkowitz). The method of vacuum fusion analysis of metals has been applied to the checking of casting techniques used by the Metallurgy Division. Three samples of uranium metal were analyzed for oxygen and nitrogen: one was metal "as received" and two were castings. One of the castings was good and the other was scaly and easily fractured. The results are given in Table 10.

TABLE 10

Oxygen and Nitrogen in Uranium Metal Determined by Vacuum Fusion Analysis

SAMPLE IDENTITY	OXYGEN (wt %)	NITROGEN (wt %)
"As received"	0.007	Less than 0.001
Good casting	0.008	Less than 0.001
Poor casting	0.020	Less than 0.001

Samples of aluminum-silicon alloy were analyzed for hydrogen to determine whether chlorine or argon was a better purge for removing hydrogen from the molten alloy. The results did not indicate one to be superior to the other.

Nickel powder of interest to R. G. Allen in neutron transmission studies was analyzed for oxide. The result was 0.07% oxygen by weight. The metal powder, encapsulated in gold foil, was analyzed by using the technique described previously.[32] A molten iron bath was used in the graphite crucible, and the CO was evolved rapidly. This is in contrast to Sloman's report[33] that evolution of CO during the reduction of nickel oxide is slow. Differences in the rate of evolution of the CO can be partly explained by variation in the size of the oxide particles.

(30) F. D. Snell and C. T. Snell, *Colorimetric Methods of Analysis*, **II**, p. 208, 3d ed., Van Nostrand, New York, 1949.

(31) *Ibid.*, p. 778.

(32) W. J. Wolkowitz, "Vacuum-Fusion Analysis of Metals," *Analytical Chemistry Division Quarterly Progress Report for Period Ending September 10, 1951*, ORNL-1121, p. 22.

(33) H. A. Sloman, "The Application of the Vacuum Fusion Method to the Determination of the Oxygen, Hydrogen, and Nitrogen Contents of Non-Ferrous Metals, Alloys, and Powders," *Metallurgia* **32**, 223 (1945).

During the next quarter ten thorium-thorium oxide alloys will be analyzed for oxygen. These alloys were prepared by arc-melting thorium iodide and thorium dioxide in such proportions that the oxide content by synthesis ranges from 0.5 to 0.77%.

Testing of Polarographs (H. H. Miller). Five High-sensitivity Recording Polarographs[34] were built recently by the ORNL Instrument Department because of the increasing need for instruments for analyzing samples that are highly radioactive or contain low concentrations of impurities. The laboratory performance of the instruments was evaluated, and they were approved for use.

RADIOCHEMICAL ANALYSES

S. A. Reynolds

Nuclear Properties

Thermal-Neutron Activation Cross Section of Uranium^{238} (G.W. Leddicotte). Neutron activation measurements were made on U^{238} prepared by calutron separation by the ORNL Electromagnetic Research Division. One series of samples was bombarded for 25 min in the pneumatic tube of the X-10 graphite pile at a flux of 4.56×10^{11} neutrons/cm^2/sec^1. The samples were then dissolved, the solution was aliquoted onto polystyrene mounts, and the U^{239} betas were counted in a Geiger-Mueller counter. Another series of samples was bombarded for 672 hr in a graphite stringer at a flux of 1.70×10^{11} neutrons/cm^2/sec^1 and assayed by counting the Pu^{239} alphas following chemical separation of the plutonium. The flux was monitored with cobalt-manganese-aluminum alloy strips in which σ_a(Co) = 34 barns and σ_a(Mn) = 13 barns. The neutron activation cross sections are given in Table 11.

TABLE 11

Thermal-Neutron Activation Cross Section of U^{238}

ISOTOPE COUNTED	CROSS SECTION (barns)	APPROXIMATE UNCERTAINTY OF MEASUREMENT (%)
U^{239}	2.80	10
Pu^{239}	2.75	10

H. S. Pomerance of the ORNL Physics Division has used the X-10 graphite pile oscillator to measure the thermal-neutron cross section of U^{238}. His average results showed the absorption cross section to be 2.81 barns (±5%).

These values for the neutron cross section of U^{238}, as well as those values obtained by other investigators, are given in Table 12.

Measurement of Radioactivity

Calibration and Standardization of Instruments (W. S. Lyon). Special instruments and techniques for counting have been intercalibrated and compared during the quarter. In October, Na^{24} was used to make a comparison between the Analytical Chemistry Division's coincidence counter (Room 12, Building 3550), the 902 Ion Chamber, and the 4π counter. Na^{24} was prepared by irradiation of Na_2CO_3 in the X-10 graphite pile. Upon dissolution the Na^{24} was made to a known volume, and aliquots were taken for ion-chamber reading. Additional aliquots were evaporated to dryness on thin polystyrene films. These mounts were then used as 4π sources. The apparatus consisted of the 4π counter as the beta detector in a beta-gamma coincidence circuit. The 4π chamber was placed directly next to the anthracene crystal, and in this manner beta-gamma coincidences were obtained. These

(34) M. T. Kelley and H. H. Miller, "A High Sensitivity Recording Polarograph," ORNL-842 (Dec. 14, 1951).

TABLE 12

Thermal-Neutron Absorption Cross Sections of U^{238}

CROSS SECTION (barns)	REFERENCE
2.81	H. S. Pomerance, personal memorandum, June 1951.
2.78	G. W. Leddicotte
2.85	S. P. Harris, C. O. Muehlhause, H. P. Schroeder, and G. E. Thomas, "Pile Absorption Cross Sections," *Quarterly Report for June, July, and August 1951, Physics Division,* ANL-4680.
2.62	M. H. Studier, L. B. Magnusson, J. C. Sullivan, T. H. Siddall, III, and J. R. Huizenga, "The Cross-Section of U^{239} for Thermal Neutrons," *Summary Report for January, February, and March 1951, Chemistry Division,* ANL-4667, p. 15.
2.6 to 2.9	W. E. Grummitt, J. Gueron, and G. Wilkinson, "Cross Section for Radiative Capture of Thermal Neutrons by Uranium-238, Thorium and Iodine," MC-70 (June 23, 1944).
2.60	D. L. Hill and D. E. Nagle, "Thermal Capture - Fission Ratio," CP-1686 (May 10, 1944).
2.74	L. Seren, H. N. Friedlander, and S. H. Turkel, "Slow Neutron Activation Cross-Sections," CP-2376 (Nov. 21, 1944).
2.58	H. L. Anderson, J. Bistline, J. Dabbs, H. Heskett, W. Sturm, and J. Tabin, "Thermal Neutron Absorption by 28," CP-2079 (Aug. 24, 1944).

data were used to calculate disintegration rates in the usual manner. In addition, the observed count in the 4π chamber was noted. This value should also be the absolute disintegration rate. Table 13 is a compilation of the results. It is felt that these data are a good confirmation of the absolute accuracy of the Analytical Chemistry Division's instruments.

A sample of Nb^{95} that was standardized for the Abbott Laboratories was measured on various instruments of both the Analytical Chemistry and the Chemistry Divisions. These data

TABLE 13

Disintegration Rate of Na^{24} Determined by Coincidence Counting, 4π Counting, and Ion Measurement

METHOD OF MEASUREMENT	DISINTEGRATION RATE (10^5 dpm)
4π counter	4.77
4π gamma coincidence	4.75
2π (bottom) gamma coincidence	4.75
2π (top) gamma coincidence	4.70
902 ion chamber	4.75

TABLE 14

Absolute Disintegration Rate of Nb^{95} Prepared for Abbott Laboratories

METHOD OF MEASUREMENT	ABSOLUTE DISINTEGRATION RATE (10^9 dpm/ml)
81 ion chamber*	1.86
902 ion chamber	1.85
81 coincidence counter*	1.86
12 coincidence counter	1.88

*Chemistry Division apparatus.

presented in Table 14 indicate the excellent agreement between the counting equipment of the two divisions.

Recalibration of High-Pressure Ion Chamber (W. S. Lyon and B. Kahn[35]). The high-pressure ion chamber in Room 10 of Building 3550 has been recalibrated by a method similar to that described by Overman and Jones.[36] The nuclides used for the calibration were Au^{198}, Nb^{95}, Co^{60}, Sc^{46}, and Na^{24}. Absolute counting rates were obtained through coincidence counting.

X-ray 4π Counting (W. S. Lyon). It has been suggested[37,38] that the 4π counter might serve as a useful instrument for x-ray counting. Accordingly, considerable information has been gathered in an attempt to formulate a satisfactory method. In each case the 4π counter has been filled with 70 cm of gas (63 cm partial pressure of xenon and 7 cm partial pressure of CH_4). Xenon has a large mass absorption coefficient for x-type radiation and should be most satisfactory. Data taken at pressures of 35 and 70 cm gave the same counting rate and indicated the high efficiency of the xenon for x-ray absorption.

Instrument and counter troubles were present throughout these experiments. Two of the 4π counters had to be partially rebuilt and all of them needed servicing at one time or another. The scalers had to be removed from service and sent to the shop at least six times. In addition, it was found that the thin polystyrene films used in mounting beta sources were unsuitable for x-ray counting. Polystyrene sputtered with 50 $\mu g/cm^2$ of aluminum was finally found to be satisfactory.

The three x-ray emitters used were Fe^{55}, Cr^{51}, and Zn^{65}. Difficulty experienced in getting reproducible results on the same solution is believed to be caused by absorption within the film and metal, as well as within slight amounts of solid present, and also by the physical arrangement of the solid. The observed counting rate is apparently the sum of x-ray transition and Auger electrons. It is thought that the Auger electrons are being absorbed, and this is substantiated in part by the observation that the count on the lower 2π side is much less than that on the upper. Because of this last effect – i.e., the two halves having different (sometimes by a factor of 2 or 3) counting rates – no reliance can be placed on the observed total 4π rate. Where the rate is known from other measurements, the 4π values have consistently been in error. It is felt that the method should be of value in x-ray counting, but the incomplete and inconsistent results so far obtained are of no practical value for making a decision.

(35) Health Physics Division.

(36) J. W. Jones and R. T. Overman, "The Use and Calibration of a 100% Geometry Ion Chamber," AECD-2367 (Mar. 20, 1948).

(37) A. R. Brosi, private communication, October 1951.

(38) C. J. Borkowski, private communication, October 1951.

Gamma Activity by Scintillation Counting (W. S. Lyon and S. A. Reynolds). The use of a scintillation counter instead of a high-pressure ionization chamber for routine gamma measurements is to be studied. As agreed by B. F. Rider (KAPL), S. A. Reynolds, and others at a recent conference,[39] the two methods will be compared.

Use of Tracerlab Geiger-Mueller Tubes (S. A. Reynolds). It has been proposed that the ORNL-built Geiger-Mueller tubes in use for routine beta-counting be replaced by Tracerlab TGC-1 tubes. This will be done as the present ORNL tubes become useless.

Radioisotope Analysis (W. S. Lyon and D. J. Coombe). Considerable effort has been directed toward developing radioanalytical methods for analyzing solutions of certain special isotope preparations including solutions of Ta^{182}, Se^{75}, Ir^{192}, and As^{73}-As^{74}. Work is in progress on methods for determining both the product activity and total impurity in these solutions. Methods for Se^{75} and Ir^{192} are essentially complete. As sufficient data are accumulated to afford useful information they will be published.

Analysis of Cyclotron Products (T. H. Handley). Materials and equipment have been assembled for the radiochemical analyses related to certain problems being studied with the Y-12 cyclotron. A few of the investigations planned are: (1) determination of the fission yield vs. mass number curve for U^{235} with protons of various energies, (2) study of certain nuclear reactions, (3) possible identification of new isotopes, and (4) determination of excitation functions.

[39] W. R. Tyson, "Beta and Gamma Specifications - Purex Products Analyses," meeting at Oak Ridge National Laboratory November 8, 1951.

Identification of Radioelements (D. J. Coombe and S. A. Reynolds). Health Physics personnel submitted for activity identification samples of muscle dissected from two mud hens found locally. The activity was identified as P^{32} and Co^{60} by using the method outlined by T. H. Handley.[40] Radiochemical phosphorus and cobalt determinations showed that more than 90% of the activity was attributable to P^{32} and the remainder to Co^{60}. Absorption curves in aluminum (Fig. 9) gave the characteristic P^{32} and Co^{60} half-thicknesses, and preliminary decay studies of the separated phosphorus indicate a half-life of 14 days.

Radiochemical Gas Analysis

Dissolver Off-Gas Analysis for Noble Gases (E. J. Fuller,[41] M. W. Echo,[41] W. A. Brooksbank). Preliminary work on the development of a method for measuring beta-ray activity in the gas from the dissolving of reactor fuel elements at the Chemical Processing Plant in Idaho has been completed. The method and apparatus were designed to (1) make dilutions of the original sample and thus allow a wide range of activities to be measured, (2) absorb radioactive iodine and count only radioactive xenon and krypton, and (3) count the sample at known dilution, temperature, pressure, volume, and geometry. A detailed operating procedure will be given in a supplement to ORNL-983[42] and in the *Operating Manual for the Off-Gas Processing System in the Idaho Chemical Processing Plant.*[43]

[40] T. H. Handley, "Identification of Radioelements," *Analytical Chemistry Division Quarterly Progress Report for Period Ending January 10, 1951*, ORNL-955.

[41] American Cyanamid Co.

[42] M. T. Kelley, P. F. Thomason, L. T. Corbin, S. A. Reynolds, C. L. Burros, and E. J. Frederick, *Manual of Analytical Procedures for the U^{235} Recovery Process*, ORNL-983 (Aug. 21, 1951).

[43] To be published early in 1952 by Oak Ridge National Laboratory.

The three main sections of the apparatus (Figs. 10 and 11) are the dilution unit, the absorption unit, and the counting arrangement. The dilution buret, a U-tube capillary manometer 1 meter long, and the sampling

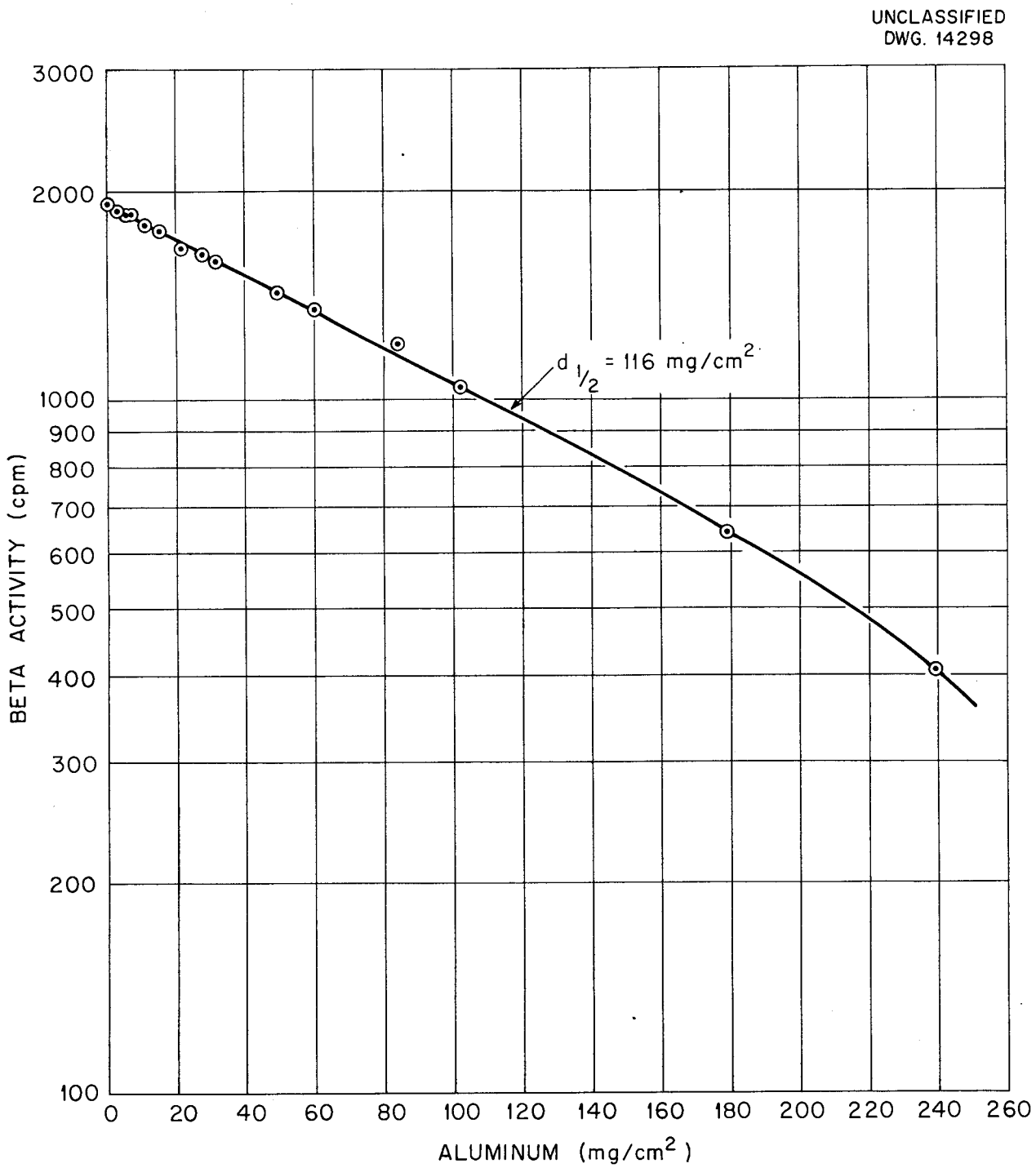

Fig. 9. Aluminum Absorption Curve of Phosphorus^{32} Separated from Mud Hen Tissue.

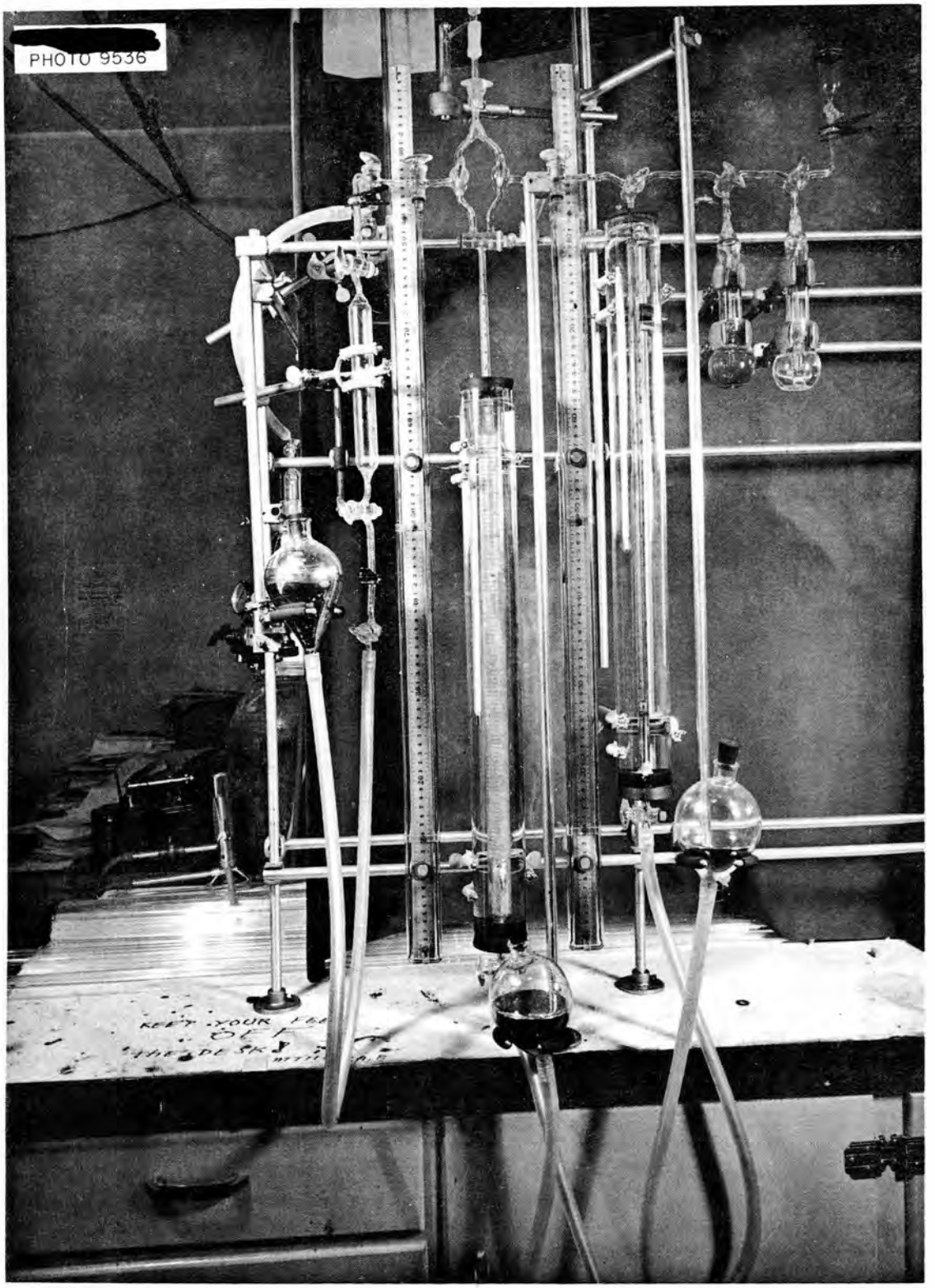

Fig. 10. Photograph of Dissolver Off-Gas Analysis Apparatus.

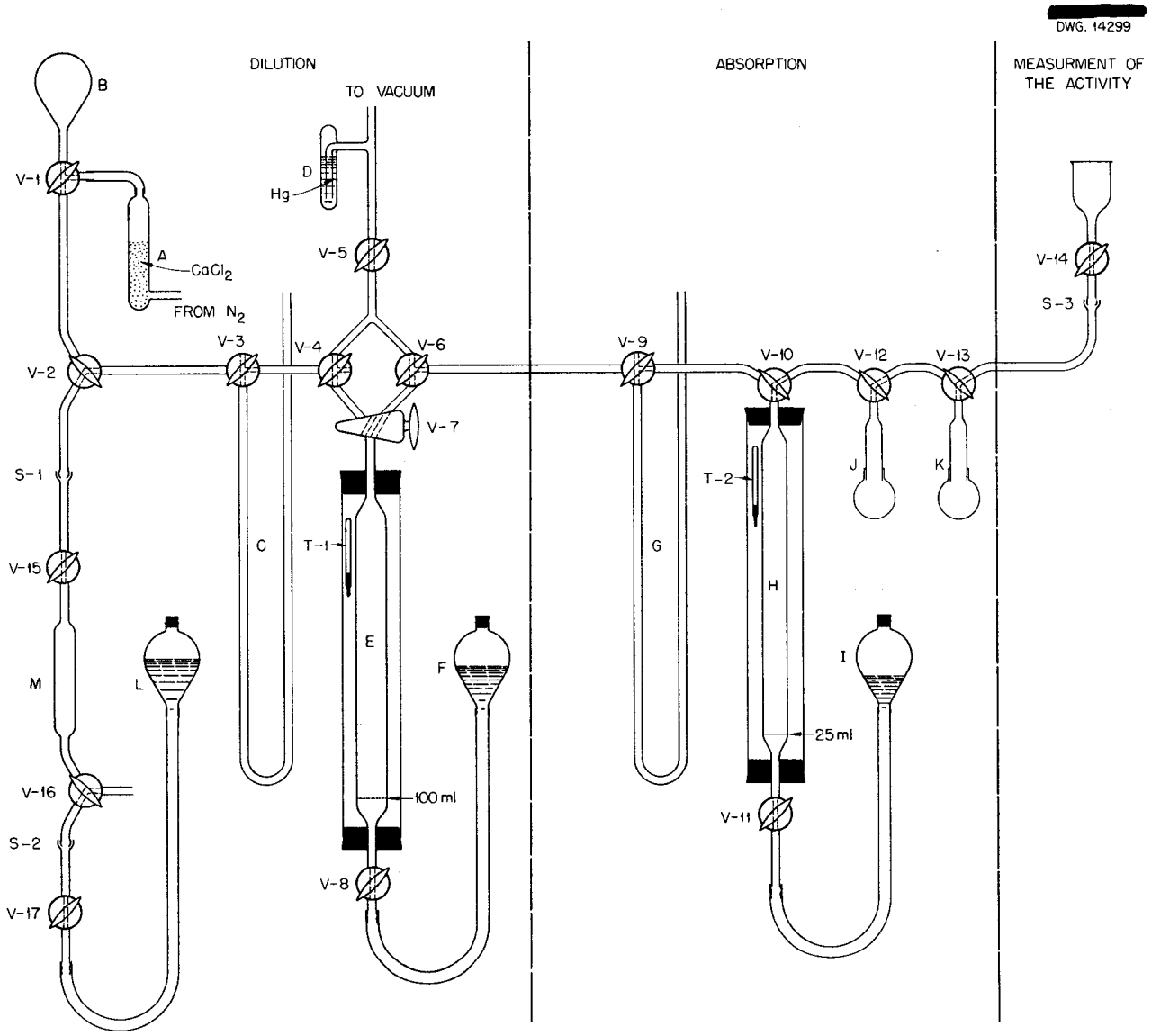

A DRYING TUBE
B N_2 RESERVOIR
C MANOMETER
D DEGREE-OF-VACUUM MANOMETER
E DILUTION BURET
F Hg RESERVOIR
G MANOMETER
H ANALYSIS BURET
I Hg RESERVOIR
J, K ABSORPTION PIPETS
L Hg RESERVOIR
M SAMPLE HOLDING TUBE
T-1, T-2 THERMOMETERS
S-1, S-2, S-3 SOCKET CONNECTIONS
V-1 - V-17 STOPCOCKS

Fig. 11. Dissolver Off-Gas Analysis Apparatus (Schematic Flow Sheet).

and storage bulbs comprise the dilution unit. A 25-ml buret, another manometer, and the absorption pipets make up the absorption section. The counting arrangement consists of the sample counting tubes,[44] an 8-shelf Geiger-Mueller tube support and shield, a "64" scaler, and a timer.

The beta activity of the gas sample is measured in the following manner. A known amount of the active sample is added to the dilution buret, diluted with dried nitrogen, and transferred as needed to the analysis buret. From the analysis buret the sample is bubbled through the absorption pipets to remove I_2 and I^- according to the standard Orsat procedure. The sample is then forced into the counting tube at less-than-atmospheric pressure. At least three aliquots must be taken, and the results expressed in counts per minute per cubic centimeter must be plotted against the pressure of the sample in the tube (Fig. 12). The product of the value obtained by extrapolating the curve to atmospheric pressure and the dilution factor will give the activity of noble gas in the original sample. The result will be in counts per minute measured through 10 mg of absorber. For the determination of the disintegration rate the geometry must be determined in the usual manner by obtaining absorption curves, etc., of a known amount of pure activity. For Kr^{85}, the geometry, with the mica window in the plane of the record shelf, is 3.5%.

Since the noble gases are somewhat soluble in the iodine-absorbing reagents, tests were conducted to measure the decrease in counting rate resulting from gas solubility. Kr^{85} and iodine-dissolver off-gas were used

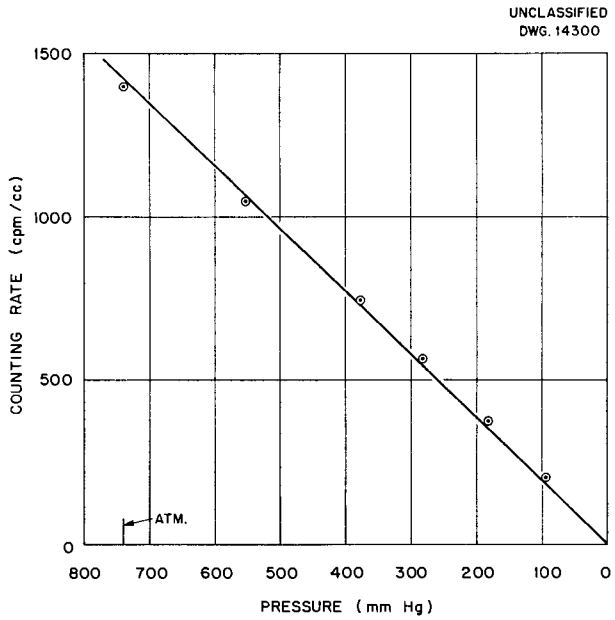

Fig. 12. Plot of Counting Rate vs. Pressure of Krypton^{85}.

in the tests. The average loss in 23 determinations was 5%, with no dependency upon temperature or pressure observed. Samples from the iodine dissolver at ORNL have been analyzed. Xe^{133} and Xe^{135} have been found. Synthetic mixtures of Kr^{85} and Xe^{133} have been analyzed by decay studies and absorption curves with good results.

The dilution procedure has developed into a rapid, simple way of accurately reducing activity concentration. The absorption procedure removes the other radioactive impurities and leaves the noble gas activities; thus the conditions of the sample in the counting tube are known. The gas counting tubes hold the purified off-gas in reproducible fashion while the activity is being determined. Absorption curves and decay data are obtained in the usual manner. Over-all performance of the equipment is very satisfactory, and it is considered to be ready for use at Arco.

(44) W. A. Brooksbank, E. J. Fuller, and M. W. Echo, "Noble Gas Analysis," *op. cit.*, ORNL-1129, Fig. 16, p. 34.

Xenon Problem – ANP (W. A. Brooksbank and S. A. Reynolds). G. W. Keilholtz requested the Analytical Chemistry Division to determine the degree of diffusion of Xe^{135} from the fuel melt now under study by ANP. This melt consists of NaF, KF, and UF_4 at an operating temperature of 800°C.

A radiochemical determination of 12.8-day Ba^{140}, which has a 16-sec xenon precursor, was made. If the half-time for escape of xenon from the molten fuel were near 16 sec, Ba^{140} activity would be low. In order to avoid absolute determination of flux and activity, it was decided to compare the activity of Ba^{140} with that of some other fission product that does not have a noble gas parent. Mo^{99} was selected. The experiment consisted of radiochemical analyses of: (1) fuel in a capsule heated to 800°C, (2) fuel at normal graphite reactor temperature (250°C), and (3) uranium-aluminum alloy. All were bombarded simultaneously and allowed to decay for the same length of time. The capsules were sampled at the bottom of the crystallized melt.

It was found that most of the Mo^{99} activity was lost from the sample that was heated to 800°C, presumably as a result of the sample reacting with the capsule. It was impossible to compare molybdenum and barium activities. No other suitable fission product was found by a search of the tables of nuclear properties; so a comparison of Ba^{140} activity with gross beta activity was made. Results are shown in Table 15. It is apparent that the difference in ratio can be ascribed to losses of gross beta activity (Mo^{99}) by reaction with the capsule walls. Xenon therefore appears not to escape appreciably from the molten fuel within seconds.

Since Xe^{135} has I^{135} ($T_{½}$ = 6.7 h) as a parent, a second experiment was performed to test the possibility that I^{135} might diffuse from the melt and that Xe^{135} would not therefore be formed in the melt. One millicurie of tracer I^{131} as I^- was placed in the bottom of the fuel capsule before it was filled with the powdered fuel. The capsule was continuously swept with dried helium, and the gas leaving the capsule was conducted through 30 ft of stainless steel capillary tubing to a charcoal trap. The trap was placed in a 4π high-pressure ion chamber (Fig. 13). A permanent record of activity growth on the charcoal vs. time was obtained by the tracing of a Brown recorder that was fed by the vibrating reed electrometer of the ion chamber. The fuel capsule was heated gradually to 800°C and maintained at this temperature for 48 hr, with a helium flow of 1.5 cc per minute.

At the start of the helium flow, there was a slight indication of activity, which was Xe^{131} in equilibrium with the I^{131} tracer. About 10% of the tracer activity went over into the trap when the furnace reached 310 to 325°C. No activity increase was detected during the run. The Brown tracing showed that the activity on the charcoal had a half life of 196 hr (iodine^{131} $T_{½}$ = 192 h). There was no activity in the capillary.

TABLE 15

Fission Product Analyses of ANP Fuel Eutectic

SAMPLE	RATIO Ba^{140} TO GROSS BETA ACTIVITY
ANP fuel eutectic (800°C)	0.160
ANP fuel eutectic (250°C)	0.129
Al-U alloy	0.134

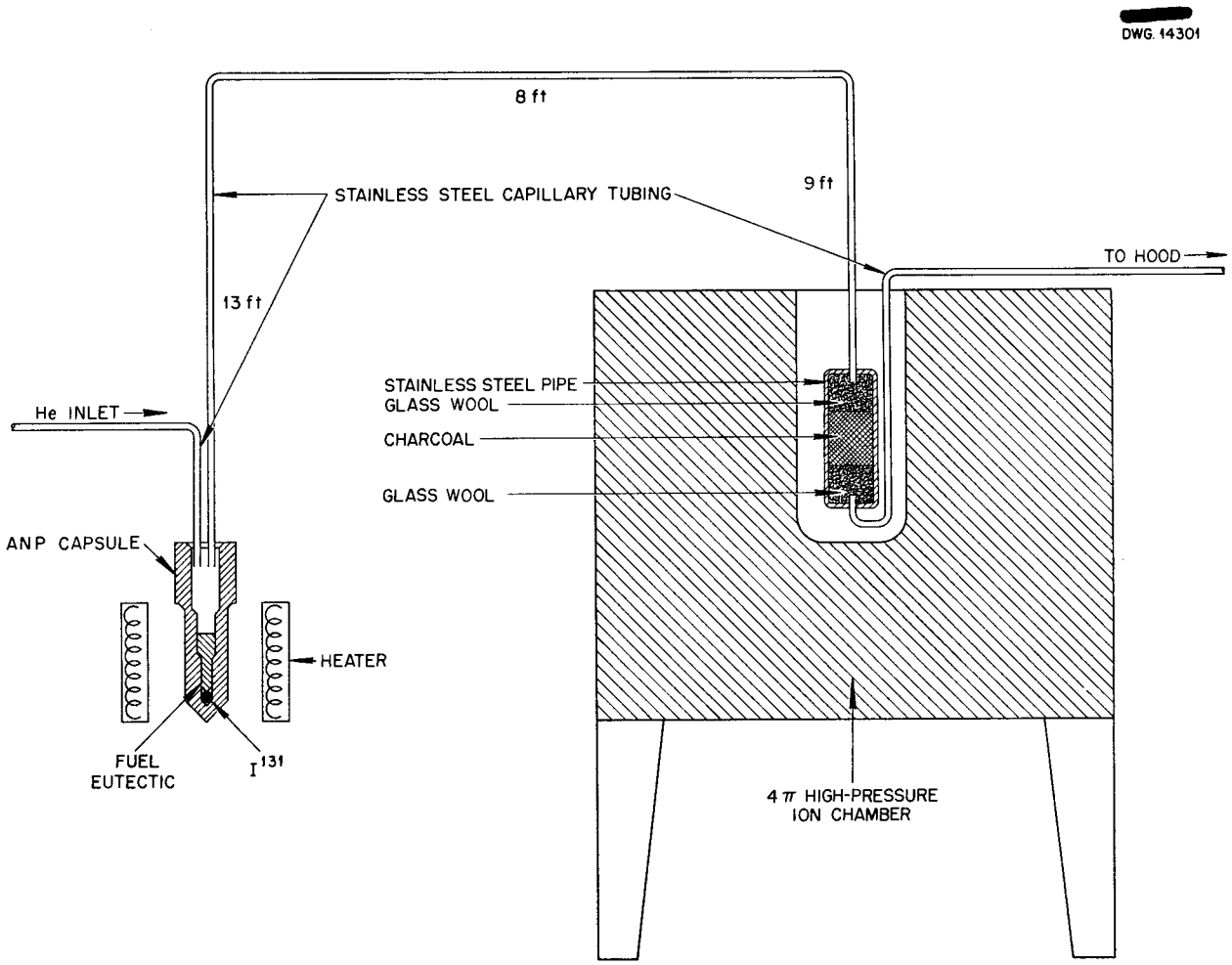

Fig. 13. Apparatus for Iodine^{131} Diffusion Experiment.

From these data it must be concluded that iodine, as I^-, does not diffuse from the melt. The 10% of iodine that did distill resulted from the partial oxidation of the iodide to iodine in the tracer before use. It was swept out before the fuel powder had melted, so it did not diffuse through the melt.

In-pile experiments are also planned. Two capsules[45] with identical charges will be bombarded at the same flux and for the same time. They will be continuously swept with helium. In one case only, the surface of the fuel melt will be swept. The xenon activities that are trapped will be only those which diffuse as xenon, or some parent of xenon, from the melt. In the second capsule helium will traverse the melt from the bottom and sweep all the volatile materials with it. In each system a cold trap will be used ahead of the charcoal traps to remove the volatile material. Xenon and krypton will be absorbed, and radiochemical separations will be made on the charcoal. The xenon in the second capsule will be total xenon, and that in the first will be diffused xenon. If the helium that

(45)Drawing ORNL-PSI-C-172, "Capsule."

is swept through the second capsule (from the bottom of the melt) shows a much higher xenon activity, it can be said that little xenon diffuses normally, and most would remain in the melt. These experiments will be concluded by January 31, 1952.

Application of Ion Exchange in Radiochemical Analysis

Plutonium Separation by Ion Exchange (W. A. Brooksbank, H. A. Parker,[46] W. T. Mullins[46]). Workers at Berkeley[47] have indicated that a rapid, quantitative separation of plutonium from uranium can be effected on anion exchange resins in strong HCl solutions. UO_2^{++} forms a strong anion complex with the chloride ion. The separation involves (1) reducing plutonium from higher oxidation states to plutonium(III) with KI (0.01 *M*), adjusting the solution to be 10 *M* in HCl, and passing it through a bed of Dowex A-1 or A-2 [plutonium(III) does not form a complex], (2) oxidizing plutonium(III) in the eluate from (1) to plutonium(IV) with HNO_3, and passing it through a small volume-reduction column, and (3) stripping the plutonium(IV) from the column with dilute HCl and leaving the plutonium(IV) in approximately 10 ml of 3 *M* HCl. Since column operations are readily adaptable to remote control, this method seemed applicable to the analysis of dissolver solutions for plutonium content. Plutonium in the final strip may be titrated potentiometrically. An over-all limit of 1% accuracy was set for the separation and titration.

It was not possible to reduce plutonium to plutonium(III) quantitatively in a solution containing as much as 500 mg of uranium (as UNH) per ml in 10 *M* HCl. KI concentrations up to 0.8 *M* were tried. The work at Berkeley was on UO_2Cl_2, but NO_3^- apparently interferes.

The plutonium and uranium in a synthetic dissolver were oxidized by heating and placed on the column in 10 *M* HCl. Plutonium breakthrough was less than 0.8% in seven free-column volumes. The plutonium was stripped from the column by reducing plutonium(IV) to plutonium(III) with 1 *M* KI in 10 *M* HCl. Recovery was only 80% in seven free-column volumes. An attempt was made to strip with 0.02 to 0.1 *M* HF in 10 *M* HCl, but little plutonium was stripped. Hydroxylamine (1 *M*) and hydrazine (1 *M*) were also tried without success.

A dissolver solution (SR-30) was obtained from the Chemical Technology Division and spiked with 8.3×10^4 cpm of plutonium tracer per milliliter. Four reductants were used on separate aliquots of the dissolver before the aliquots were made to the required HCl concentration. The reductants were 1 *M* $SnCl_2$, 0.1 *M* KI, 1 *M* hydroxylamine and SO_2 gas; all reduced the plutonium more than 90%. $SnCl_2$ and SO_2 also reduced large quantities of UO_2^{++} to uranium(IV). In this valence state uranium acts as plutonium does and is eluted with the plutonium. The KI saturated the column with I_3^- after several runs. Hydroxylamine was effective when the feed was heated for 1hr at 80 to 90°C.

In all runs of HCl concentration greater than 7 *M* there were two activity peaks and both were carried on LaF_3. It is probable that the first peak is plutonium(III) and the second plutonium(IV), since uranium will not follow through the LaF_3 analysis for plutonium.

Flow rates range between 0.5 and 1.0 ml/min on a Dowex A-1 (120 to 270

(46) General Radiochemical Analyses Group.

(47) D. A. Orth, private communication, October 1951.

mesh) column 16 mm in diameter by 7 cm in length. Reduction of the flow rate had no appreciable effect on separation.

Decreasing the HCl concentration caused the plutonium to be eluted more rapidly and in a smaller volume; therefore acid concentrations from 6 to 9 *M* were used. In all cases 0.5 ml of 5 *M* hydroxylamine heated with the sample for 1 hr at 80 to 90°C was used as the reductant. The sample charge contained 424 mg of uranium per ml and 8.3×10^4 cpm of plutonium. Table 16 gives the results of varying the acid concentration expressed as the per cent loss (not collected) in the first 50 ml of eluate. Fluorometric determinations showed a uranium concentration of less than 0.005 μg per ml of eluate for the runs listed in Table 16.

TABLE 16

Effect of HCl Concentration on Plutonium Retention in Dowex A-1 Column

HCl CONCENTRATION (*M*)	PLUTONIUM LOSS (%)
9	8.3
8	9.8
7	4.3
6.5	2.0
6	0.8
6	0.7

In order to concentrate the plutonium from the eluate, the first 50 ml from one of the runs made at 6 *M* HCl was made 0.1 *M* in $NaNO_2$ and heated for 1 hr at 80 to 90°C, cooled, made 10 *M* in HCl, and passed through the volume-reduction column. The column is 6 mm in diameter by 1 cm in length; it is packed with 270 to 325 mesh Dowex A-1 and has a flow rate of 0.5 ml per minute. Less than 0.1% of the plutonium was found in 100 ml of 10 *M* HCl passed through the column.

Fission-product decontamination should be obtained on both columns. Those fission products that form Cl^- complex anions will be retained with the uranium on column 1, and the ones that do not will pass through the volume-reduction column. Final decontamination will occur when the plutonium strip from the volume-reduction column is extracted with TTA. The organic phase of this extraction will be stripped with small volumes of 9 *M* H_2SO_4, and the solution will be titrated.

Experiments are in progress to determine the optimum conditions for stripping the plutonium(IV) from the volume-reduction column and are planned to test fission-product decontamination. Over-all recovery will be greater than 98%, but just how much greater will be determined by further experimentation.

Solvent Extraction Methods

Plutonium SCRUP Program (F. L. Moore). In the purification of plutonium in the SCRUP dissolver solutions it is planned to use a TTA extraction from HCl followed by a H_2SO_4 strip prior to titration of the plutonium. Therefore the behavior of plutonium in the system was investigated and the behavior of iron checked.

Extractions with 40 μg of plutonium showed that the standard TTA method was satisfactory for the recovery of plutonium from 1 *M* HCl. Duplicate extractions yielded recoveries of 99.7 and 99.9%. Since it is desirable to have the purified plutonium in 4.5 *M* H_2SO_4 for the final titration, the effect of time on the stripping of plutonium from

0.5 *M* TTA-xylene with 4.5 *M* H_2SO_4 was checked. A solution of 0.5 *M* TTA-xylene containing 8.4 x 10^5 cpm of plutonium was stripped for various periods of time with 4.5 *M* H_2SO_4. The results are given in Table 17.

Solutions of 5 mg of $FeCl_3$ per milliliter of HCl solutions of various HCl concentrations were extracted for 10 min with equal volumes of 0.5 *M* TTA-xylene. Fe^{59} tracer was used to follow the iron separation. The results are given in Table 18.

When using a volume of 4.5 *M* H_2SO_4 double that of the organic phase, it was observed that only 1.7% of the iron stripped under conditions at which plutonium stripped quantitatively. Thus it is thought that a negligible quantity of iron will follow through in the plutonium extraction and stripping steps.

TABLE 17

Effect of Time on Stripping Plutonium from 0.5 *M* TTA-Xylene with 4.5 *M* H_2SO_4

TIME (min)	PLUTONIUM STRIPPED (%)
5	95.9
10	97.4
12	99.7
14	99.7
15	99.1

TABLE 18

Effect of HCl Concentration on Extraction of Iron from HCl Solution with 0.5 *M* TTA-Xylene

5 mg of $FeCl_3$ per milliliter of HCl solution

HCl (*M*)	IRON EXTRACTED (%)
0.05	33.6
0.37	22.4
1.00	4.4
2.00	1.9
2.60	1.2

Extraction of Anionic Species – Protactinium, Thorium, Zirconium, and Hafnium (F. L. Moore). The anionic solvent extraction behavior of niobium and tantalum with methyldioctylamine (hereafter referred to as MDOA) has been described.[48] Since then, the extraction of protactinium, thorium, zirconium, and hafnium in this system has been studied in cooperation with G. W. Leddicotte. Tracer solutions of various acidities were extracted for 5 min with an equal volume of 5% MDOA-xylene. The effect of acid concentration on the extraction is shown in Table 19.

TABLE 19

Effect of HCl Concentration on Extraction of Pa^{233} with 5% MDOA-Xylene

HCl (*M*)	Pa^{233} EXTRACTED (%)*
2.0	16.6
4.0	77.0
6.0	98.0
8.0	99.1
10.1	99.3
11.1	99.0

*Each value is the average of the results of at least two extractions.

Less than 1% of the thorium was observed to extract from 9 *M* HCl with 5% MDOA-xylene under the same conditions. Although the HCl range has not been studied for thorium, it is

[48] F. L. Moore, "Extraction of Anionic Species (Niobium and Tantalum)," *op. cit.*, ORNL-1129, p. 35.

TABLE 20

Effect of HCl Concentration on Extraction of Zr^{95} from HCl Solution with 5% MDOA-Xylene

HCl (*M*)	Zr^{95} EXTRACTED (%)
6	1.2
8	17.2
9	79.2
12	99.5

TABLE 21

Effect of HCl Concentration on Extraction of Hf^{181} from HCl Solution with 5% MDOA-Xylene

HCl (*M*)	Hf^{181} EXTRACTED (%)
2	0
4	0
6	0
8	23.1
10	93.8

thought that there will be negligible extraction over the entire range. The zirconium and hafnium results are given in Tables 20 and 21.

The MDOA-xylene extraction of zirconium and hafnium from H_2SO_4 solution is being investigated. The preliminary work indicates that both zirconium and hafnium extract very satisfactorily from dilute H_2SO_4.

Separation of Scandium and Yttrium Using TTA-Xylene Extraction (W. S. Lyon and R. R. Rickard[49]). Newton and Broido[50] have indicated many possible separations by using TTA as a chelating agent. Lyon and Sanders have applied this reagent to the separation of strontium-yttrium mixtures.[51] They found that yttrium began to extract into 0.5 *M* TTA-xylene above pH 2.0; at pH 2.5 it was 16% extracted; at pH 3.0, 68%; and at pH 3.5 the extraction was essentially complete. As a result of recent requests for analysis of Sc^{46} and Y^{91} mixtures it is thought that continuation of the study of TTA separations may prove useful. Accordingly, the amount of Sc^{46} extracted from HCl solution as a function of pH has been studied. The data indicate that the extraction is about 96% complete at pH 1 and complete at pH 2.0. Between pH 1.5 and pH 2.0 it is possible to separate Sc^{46} from Y^{91}-Sc^{46} mixtures quite efficiently. The method is simple, rapid, and reliable. The pH is adjusted to 1.5 and the sample is extracted with an equal volume of 0.5 *M* TTA-xylene. (Three extractions are recommended.) Sc^{46} is counted or measured in the organic phase on a gamma chamber. Y^{91} is determined by beta counting of an aliquot of the aqueous phase. This method has given excellent results.

Radiochemical Analyses for the Homogeneous Reactor Project (W. A. Brooksbank and S. A. Reynolds). The only feasible methods of determining the neutron flux in the homogeneous reactor appear to be determination of the yield of two or more fission products and measurement of the activation of some element added in a known quantity to the fuel. Major difficulties include losses of activity as a result of insolubility under HRE operating conditions and uncertainty of constants such as cross section and fission yield.

[49] Radioisotope Analyses Group.

[50] E. R. Newton and A. Broido, "Abstracts of Project Literature on TTA and Other β-Diketones," ORNL-36 (May 4, 1948).

[51] W. S. Lyon and S. M. Sanders, personal communication, April 1950; "Determination of Sr-89 in Sr-90 - Y-90 Mixture," *Analytical Chemistry Division Memorandum*, April 1950.

It is proposed to correlate flux with yield of Cs^{137} and Rb^{86} (if the latter can be measured readily) by bombarding known amounts of uranium at known flux in the X-10 graphite pile. These nuclides may then be checked as to behavior in HRE conditions in the mockup.

Activities in Neutron-bombarded Water (D. A. Brown[52] and S. A. Reynolds). Samples of river water have been subjected to neutron bombardment in the ORNL graphite pile so that the identities and quantities of radionuclides produced could be determined. The samples included raw water, flocculated and decanted water, and flocculated and filtered water.

Each sample was placed in a quartz tube, stoppered with Teflon, inserted in a "spill can" (Fig. 14), and enclosed in a plastic container ("rabbit"). A photograph of the apparatus is shown in Fig. 15. The sample was bombarded for a measured time of 1 to 10 min in a flux of 6×10^{11} neutrons/cm^2/sec. (The method was tested by bombardment of distilled water.) Aliquots of bombarded water were evaporated for counting by means of end-window Geiger-Mueller beta counters or placed directly in tubes for measurement by a scintillation gamma counter. The Geiger-Mueller counters used were calibrated by P^{32} sources of known disintegration rates. No attempt was made to determine disintegration rates of gamma emitters; it was merely observed that decay curves for beta and gamma activities were qualitatively the same. Separations of sodium, manganese, and phosphorus activities were also made (Table 22).

[52] On loan from Du Pont.

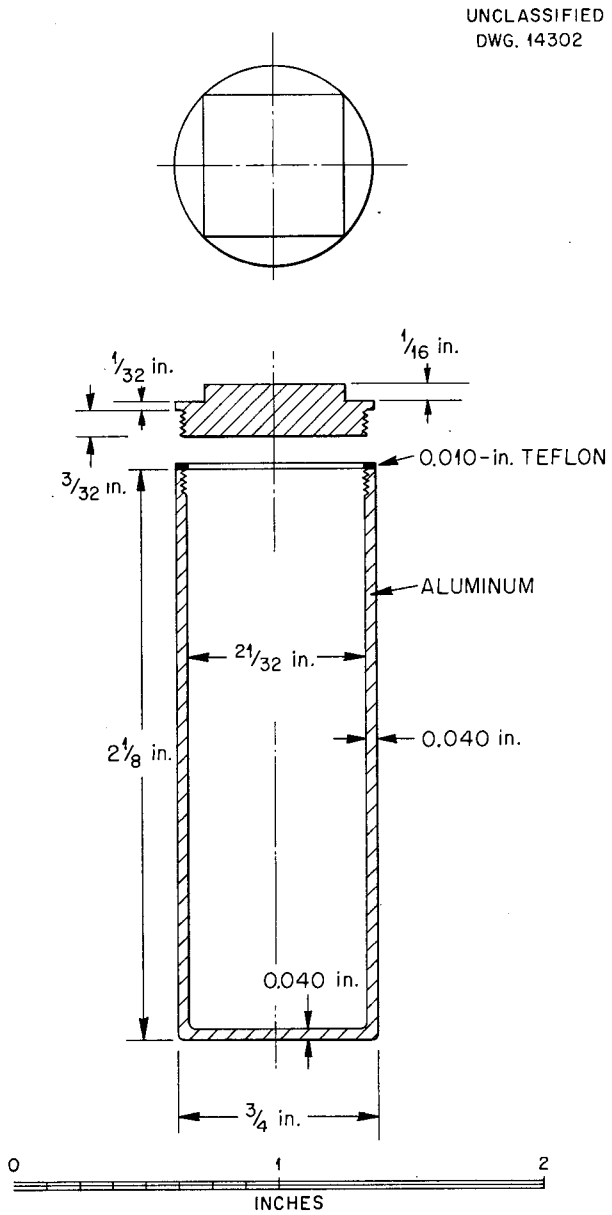

Fig. 14. "Spill Can" for Containing Aqueous Samples During Neutron Bombardment.

Table 23 lists the major activities found by resolution of beta decay curves.

The gross beta activity data are summarized in Table 24, and the microcuries of activity per cubic centimeter at various decay times are

Fig. 15. Apparatus for Neutron Bombardment of Aqueous Samples.

tabulated. All results have been calculated on the basis of an integrated neutron flux (nvt) of 2.4×10^{13}. It is believed that the results are more accurate than a factor of 2, which seems to be adequate for the intended purpose.

TABLE 22

Radiochemical Analyses of Irradiated Water

SAMPLE	NUCLIDE ACTIVITY* (μc/cc)		
	Na^{24}	P^{32}	Mn^{56}
Raw	4×10^{-4}	$<5 \times 10^{-6}$	$\sim 7 \times 10^{-4}$
Flocculated and decanted	4×10^{-4}	$\sim 6 \times 10^{-6}$	$\sim 2 \times 10^{-4}$
Flocculated and filtered	5×10^{-4}	$<5 \times 10^{-6}$	$\sim 4 \times 10^{-4}$

*At time of discharge from reactor.

TABLE 23

Activities in Irradiated Water

HALF LIFE	NUCLIDES	REMARKS
<1 h	Cl^{38}, Mo^{27}, etc.	Large amount
~2.6 h	Mn^{56}, Si^{31}, Ni^{65}	Large amount
~15 h	Na^{24}	Na principally
>1 d	Ca^{45}, Fe^{59}, S^{35}, etc.	Low

ACTIVATION ANALYSES

G. W. Leddicotte

Thermal-Neutron Activation Cross Section for Uranium^{238}. A discussion of the measurements of the thermal-neutron cross section of U^{238} by neutron activation analysis is given under "Radiochemical Analyses" in this report.

Determination of Trace Amounts of Strontium in Barium Chloride. Neutron activation analysis has been applied to the determination of trace amounts of strontium in a series of reagent-grade $BaCl_2 \cdot H_2O$ samples submitted by the Homogeneous Reactor Project. Portions of these samples were bombarded for 62 hr in the pneumatic tube of the X-10 graphite pile, put into solution, and the strontium (as the radioelement, Sr^{89}, $T_{1/2}$ = 53 d) finally isolated and precipitated for counting as strontium oxalate. The radioactivity produced in known amounts of strontium was processed under similar conditions. In Table 25, the activation analysis results are compared with results obtained by the Spectrographic Laboratory (X-10).

Analytical Procedures. The separation method described in the following sections are being investigated for use in activation analysis.

TABLE 24

Gross Beta Activity of Irradiated Water after Various Decay Times

WATER SAMPLE	ACTIVITY* (10^{-3} μc/cc)						
	½ hr	1 hr	2 hr	5 hr	1 day	3 days	OTHER
Raw	4.1	2.7	1.6	0.9	0.22	0.02	~0.005 at 14 days
Flocculated and decanted	2.2	1.7	1.2	0.6	0.19	~0.05	~0.005 at 10 days
Flocculated and filtered	5.5	3.4	1.9	1.0	0.44	0.07	~0.005 at 7 days

*Average results.

TABLE 25

Determination of Strontium in Barium Chloride

Comparative data

BARIUM CHLORIDE SAMPLE IDENTITY	STRONTIUM (%)	
	ACTIVATION ANALYSIS	SPECTROGRAPHIC ANALYSIS
Baker and Adamson (Lot F248)	0.084	0.080
Baker and Adamson (Lot F240)	0.016	0.016
Merck	0.045	0.045
Y-12*	0.048	0.049

*Manufacturer unknown.

Ion-Exchange Methods. The separation of sodium, potassium, rubidium, and cesium in irradiated samples by cationic exchange resins is still being studied. Preliminary work indicates that Amberlite IR-105G will effect a quicker separation of these elements than will IR-1 or IR-100 resins when using the same conditions for column separation.

Solvent Extraction Methods. The behavior of niobium and tantalum in anionic solvent extraction with methyldioctylamine has been discussed by F. L. Moore.[48] The activation analyses work has been directed toward the development of an analytical method for the determination of trace amounts of these elements in samples that have been bombarded with neutrons. The behavior of zirconium and hafnium in extraction with methyldioctylamine is also being studied.

Precipitation Methods. Separation procedures in which precipitation methods are used for determining trace amounts of chromium, silicon, and uranium in various neutron-bombarded materials are being investigated.

New Applications of Activation Analysis. The method of activation analysis is being considered for possible application in determining trace amounts of vanadium and aluminum in LiOH and trace amounts of elements in lubricating oils.

SPECTROCHEMICAL ANALYSES

C. Feldman

A. Estepp M. Murray
M. Wittels

Spectrochemical Working Curves. Analytical working curves were developed for the determination of aluminum, copper, and nickel by the porous-cup technique (Table 26).

TABLE 26

Metals for which Spectrochemical Working Curves Have Been Developed

Solvent: dilute H_2SO_4

METAL	METAL CONCENTRATION RANGE COVERED (ppm)
Aluminum	0.6 to 30.0
Copper	0.3 to 10.0
Nickel	5.0 to 150.0

Measurement of Recovery of Aqueous Phase in TBP Extractions. When small volumes (<5 ml) of uranium solution are shaken with TBP, a substantial fraction of the aqueous phase is sometimes lost because of the formation of emulsions, drops adhering to walls, holdup in stopcocks, etc. This loss is significant when the aqueous phase is used to determine trace impurities in uranium. This information had been obtained previously by adding a known

quantity of yttrium to the aqueous phase before the extraction and measuring the quantity of yttrium recovered after the extraction. It had been found that the amount of yttrium extracted into the TBP phase was negligible. Spectrographic measurement of the amount of yttrium recovered in the aqueous phase, however, was complicated by the presence of certain elements, notably calcium, that changed the yttrium-to-cobalt intensity ratio for a given concentration of yttrium. Since this difficulty could be overcome only by preparation of yttrium-cobalt curves in matrixes resembling any and all samples received or by an extensive search for a line pair less sensitive to matrix composition, a new approach was sought to the problem of measuring aqueous-phase recovery in TBP extractions.

An apparently satisfactory method of determining loss of the aqueous phase has been found in the use of Co^{60} tracer. A quantity of the tracer solution sufficient to give a reading of approximately 50 on the 10^{10} scale of a gamma-ray ionization chamber is added to the aqueous phase. The total sample or an aliquot (<2 ml) is placed in a 2-ml volumetric flask and read in the gamma-ray ionization chamber. When the uranium has been extracted from the sample with TBP in the usual way, the aqueous layer is then isolated and its gamma-ray activity read in the ionization chamber. After the appropriate background corrections have been made, the first reading is divided by the second to give a so-called "recovery factor." Concentrations of all elements subsequently determined in the uranium-free aqueous phase are multiplied by this recovery factor to correct for loss of aqueous phase during the shaking. All spectrographic exposures made with these solutions are performed in an appropriately designed spark chamber.[53] The choice of Co^{60} for this use was dictated by the following considerations:

1. The amount of Co^{60} required is far too low to be detected spectrographically, so the presence of Co^{60} will not interfere with spectrographic intensity ratios even when cobalt is sought or used as the internal standard.

2. Since the Co^{60} activity is a hard gamma ray, the ionization chamber readings are independent of the composition of the aqueous phase (apart from other gamma emitters) and of the shape of the container.

3. The half life of Co^{60} (5.2 y) is long enough to obviate the necessity for decay corrections between initial and final readings.

4. Tests made at ten times the above-mentioned activity level showed that no detectable amount of Co^{60} tracer is extracted into TBP from 5 *N* HNO_3 solution, which is the usual aqueous phase.

Analysis of Uranyl Fluoride (UO_2F_2). Trace impurities in UO_2F_2 are of interest to R. D. Brown of the Chemistry Division in his fundamental study of this compound. When the compound was dissolved in 5 *N* HNO_3 and the uranium extracted with TBP, substantial amounts of sodium, boron, and aluminum were found in the aqueous phase and indicated attack on the pyrex glassware. By igniting the UO_2F_2 to U_3O_8 and dissolving in HNO_3 before extraction, this difficulty is eliminated.

[53] C. Feldman, M. B. Hawkins, M. Murray, and D. R. Ward, "Spectrochemical Analysis of Radioactive Solutions," *Anal. Chem.* **22**, 1400 (1950).

INORGANIC PREPARATIONS

D. E. LaValle R. H. Sampley

Aluminum Phosphide (D. E. LaValle). Aluminum phosphide was requested by the Chemical Physics Group of the Chemistry Division. Quite contradictory results are reported from the more recent studies on this compound[54,55]; however, it is agreed that union between the elements takes place at not less than 400°C. White and Bushey[54] produced a material of 94% purity, with the remainder being largely aluminum metal.

A series of five preparations was made to determine the conditions of optimum yield of aluminum phosphide (AlP). Various excesses of phosphorus were used and sublimed off after reaction. The preparations were carried out in an argon atmosphere with ignition by blowtorch or by use of a preheated furnace. Also, several preparations were made in sealed quartz tubes, which were abandoned because the red phosphorus segregated as white phosphorus and ignited the mixtures when the tubes were opened. All these preparations were handled in a dry-box since exposure of the AlP to moist air produces phosphine.

The most promising preparation was made with a mixture of about 35% aluminum (stoichiometric = 36%) and 65% phosphorus. The mixture was packed in a porcelain boat, dried in a stream of argon at 120°C, and then quickly placed in a furnace preheated to 800°C. The expelled phosphorus burned at the exit of the quartz tube. The x-ray pattern on this product showed only a trace of Al_2O_3. X-ray diffraction studies of the other products showed considerable amounts of Al_2O_3 and aluminum. However, for some unknown reason it was impossible to duplicate this successful run in four, carefully repeated attempts.

Some chemical analyses were carried out according to the method of White and Bushey.[54] Their method involves reaction of the product with water and then acid in a closed system. The phosphine (PH_3) given off is caught in a solution of $HgCl_2$ and a corresponding amount of HCl is liberated. The HCl is then titrated. The hydrogen evolved from the aluminum metal passes through the $HgCl_2$ solution, is burned to water in a CuO combustion tube, and weighed in an absorber. Total aluminum is determined on the residue in the reaction chamber, and by difference Al_2O_3 is obtained. This method is based on the assumptions that no other phosphines (such as P_2H_4) are evolved and that the PH_3 is a measure of the AlP; both assumptions are contradicted by the work of Montignie.[55] At any rate, the samples analyzed by this method showed AlP contents of 80 to 85%.

It was decided to attempt preparations in metal bombs. A preliminary preparation was made in a commercial type of stainless steel bomb. The object was to fill the interior space completely with a stoichiometric mixture of aluminum and phosphorus to eliminate all voids that would supply oxygen and prevent the segregation of red phosphorus and its conversion to white phosphorus. This was essentially accomplished, but the packing was not carried out to extremes. The run was made without incident at a starting temperature of 400°C and a final temperature of 600°C. The x-ray patterns obtained on the product were favorable; only a small amount of Al_2O_3 showed and the chemical analysis indicated about 90% AlP.

(54) W. E. White and A. H. Bushey, "Aluminum Phosphide – Preparation and Composition," *J. Am. Chem. Soc.* **66**, 1666 (1944).

(55) E. Montignie, "Les phosphures d'aluminum," *Bull. Soc. Chim. France* **13**, 276 (1946).

Meanwhile, a small bomb designed specifically for the reaction was received. The above-described procedure was repeated except that the mixture was packed very hard by use of a special plunger and a hammer, and during processing a stream of argon was passed around the bomb in a quartz tube. At 600°C an observable reaction occurred. Quantities of phosphorus appeared in the quartz tube, and the bomb was raised to bright red heat for about a minute, after which time it cooled down again to 600°C. Examination after the run showed the bomb to be in as good condition as before and still tight. The phosphorus leakage probably occurred around the seal during the interval of high temperature. The analysis of this product has not yet been made.

Phosphors (R. H. Sampley). The phosphors listed in Table 27 were prepared for the Physics Division. The activators used are indicated.

TABLE 27

Phosphors Prepared for the Physics Division

PHOSPHOR	ACTIVATOR*
Li_2BeF_4	Al, As(III), As(V), Bi, Cb, Ce(III), Ce(IV), Co, Cr, Cs, Cu, Dy, Ga, Hg, Ho, In, La, Mn, Nd, P(V), Pb, Pd, Re, Rh, Sb(III), Sb(V), Si, Sn, Sr, Ta, Te, Ti, Tl, U, Y, Zn, Zr, AgCl, $AgNO_3$
Li_2MgF_4	Ce(III), CbF_5, CuF
Li_2ZnF_4	Ce(III), CbF_5, CuF
Na_2LiBeF_5	Ce(III), CbF_5, CuF
LiF	Ce(III)

*A separate phosphor was prepared with each activator listed.

Other Preparations (R. H. Sampley). The following compounds were also prepared or purified: $Be(OH)_2$, AgCl, BiF_3, ZnF_2, AlF_3, TeF_4, CbF_5, HI, LiCl, Li_2CO_3, $LiI \cdot 3H_2O$, SnI_2, Na_2LiBeF_5, Li_2MgF_4, Li_2ZnF_4, LiF, $C_2H_5OSO_3H$, $Nd_2^{142}O_3$, $(C_2H_5)_3\ Nd^{142}(SO_4)_3 \cdot xH_2O$, and $(C_2H_5)_3\ Nd^{143}(SO_4)_3 \cdot xH_2O$.

ANALYTICAL CONTROL OF THE HRE SOLUTION

W. H. Davenport, Jr. R. H. Powell

Princo Densitrol. One of the two low-temperature Princo Densitrol instruments received during the previous quarter has been laboratory-tested and is now installed at Y-12 in a test loop assembled by C. Heisig, where it will be tested further for the effects of the conditions of pressure, corrosion, erosion, etc., that are expected to exist in the HRE. A direct-acting Kates flow regulator has been received and is also being installed in the Y-12 test loop in series with the low-temperature Princo Densitrol unit. The Kates regulator is designed to produce a 0.25-gpm flow in the Densitrol.

The second low-temperature Densitrol instrument with an experimental stainless steel plummet is being laboratory-tested.

The third Densitrol, designed for use at 250°C, has not been received from Precision Thermometer and Instrument Company, nor have the low-temperature Lavite-form microformers that are to be used with the two low-temperature Densitrol units.

The ultimate success of the Princo Densitrol in a bubble-free stream of the HRE UO_2SO_4 solution may depend upon whether satisfactory mechanical strength and/or corrosion resistance of the plummet material can be achieved. A description of the plummet has been

published.[56] During the last quarter an experimental stainless steel plummet, made by the cooperative effort of Precision Thermometer and Instrument Company and ORNL, was received and it is being tested under laboratory conditions. It has a type-347 stainless steel tube section and type-316 stainless steel end sections. The plummet was internally pressurized by filling it with nitrogen to 920 psi at 30°C, cooling it in liquid nitrogen, disconnecting it from the nitrogen fill line, and then heliarc-welding it at the fill point. The external volume of the stainless steel plummet was determined by displacement to be 89.0 centimeters. The internal volume was determined by calculation to be 76.3 centimeters. It was found by weight determinations that 4.4 g of nitrogen had been added, which was shown by calculation from the Ideal Gas Law to be equivalent to an internal pressure of 745 psi at 27°C and indicated that some of the gas was lost during the welding process.

Preliminary laboratory tests at normal atmospheric pressure show that a stainless steel plummet will trap and hold gas bubbles on its external surface for periods as long as 45 min, in contrast to the nonretention of gas bubbles by a pyrex plummet under similar conditions. Methods of discharging the bubbles are being investigated because the Densitrol readings are disturbed by their presence.

A titanium plummet has been designed and fabricated by R. J. Fox of the ORNL Research Shops and heliarc-welded at its two rim lips by P. Patriarca, Metallurgy Division. This plummet was pressure-tested internally to 2500 psi at room temperature. A dummy, constructed of titanium with dimensions identical to those of one end of the plummet, had been made to test the quality of the weld. It withstood internal pressure to 4000 psi and then ruptured.

The titanium plummet was internally pressurized with argon at 920 psi; the argon line valve was closed; the argon was frozen by immersing the plummet in liquid nitrogen; about 2 atm of helium was introduced into the plummet through a suitable T-type connection and valve. The plummet was then disconnected, and the fill point was immediately heliarc-welded in open air by R. J. Fox of the ORNL Research Shops.

Before being subjected to experimental use in the low-temperature Densitrol unit, the titanium plummet will be further pressure-tested to ensure safety by elevating the temperature to 250°C in a suitably protected area. It will also be tested against external collapse in a suitable bomb by dead-weight testing. If this plummet meets the specifications for its use, it will be more fully described in the Homogeneous Reactor Project Quarterly Progress Report for the period ending March 15, 1952. From the work done to date no conclusion can be drawn regarding the mechanical strength and corrosion resistance of the stainless steel and titanium plummets. The work is continuing.

Radiation-Resistant Glasses. Four neutron-absorbing, cadmium borofluosilicate optical glasses[57] have been exposed to an average neutron

[56] W. H. Davenport, Jr. and R. H. Powell, "Princo Densitrol," *Homogeneous Reactor Project Quarterly Progress Report for Period Ending August 15, 1951*, ORNL-1121, Fig. 7.1, p. 77.

[57] W. H. Davenport, Jr. and R. H. Powell, "Analytical Chemical Control of the Homogeneous Reactor Solution," *Homogeneous Reactor Experiment Quarterly Progress Report for Period Ending November 30, 1950*, ORNL-925, p. 275.

flux of 7.3×10^{11} neutrons/cm^2/sec for a total initial exposure of 5.4×10^{18} nvt at 250°C in the X-10 graphite pile. The changes in their optical spectra and the spectrographic identification of their compositions were reported in ORNL-1121.[58] The composition of the glasses as determined by synthesis and their chemical analyses were also reported.[59]

Recently these glasses were removed from their former position in the X-10 graphite pile after a second irradiation period of eight months at a temperature of approximately 250°C. Their optical spectra have been measured as previously at 30 hr after reactor shutdown, which was 17.5 hr after removal of the samples from the reactor. Further measurements of the optical spectra are being made to determine whether changes in the spectra occur at room temperature over a period of time. These data will be reported in detail in the Homogeneous Reactor Project Quarterly Progress Report for period ending March 15, 1952.

It may be said now that the glasses are being continuously self-damaged at this date (17 days after removal from the reactor) by their own radioactivity at room temperatures and in the dark. However, the damage observed has been small compared with that occurring from the end of the initial 5.4×10^{18} nvt irradiation at 250°C to the end of the next eight-month irradiation at approximately 250°C. Results indicate that these glasses do not possess optical stability in a high neutron field, and the study will be discontinued after the self-damaging effect is investigated. It was established previously that these particular neutron-absorbing glasses lack chemical stability.[59]

Q **Measurement.** The search continues for insulating materials for construction of a *Q* coil that will be chemically stable in 0.17 *M* UO_2SO_4 solution. Materials are being tested at boiling temperature (approximately 100°C), and at 250°C in the presence of added oxygen at an elevated pressure. Corrosion tests were made by J. English of the Reactor Engineering Division. The results to date are given in Table 28.

The materials that withstood chemical attack in boiling 0.17 *M* UO_2SO_4 are being tested in the same medium at 250°C in an oxygen atmosphere. No data are available on these tests at this time.

TABLE 28

Chemical Stability of Materials Considered for *Q*-Coil Construction

Tested in boiling 0.17 *M* UO_2SO_4 solution

UNSTABLE	STABLE
Stupalith "2417"*	Stupalith "2209"*
Cordierite	Petalite
Spinel cordierite	Ruby**
Chromite	White sapphire**
Fosterite	Golden sapphire**
Barium mica	Blue spinel**
Boron mica	Titania**
Corundum	Tourmaline**

*Obtained from Stupakoff Ceramic and Mfg. Co., Latrobe, Pa.

**Synthetic samples obtained from Guardian Mfg. and Supply Co., New York, N. Y.

(58) W. H. Davenport and R. H. Powell, "Radiation-Resistant Glasses," *Homogeneous Reactor Project Quarterly Progress Report for Period Ending August 15, 1951*, ORNL-1121, p. 81.

(59) W. H. Davenport, Jr. and R. H. Powell, "Chemical Control," *Homogeneous Reactor Project Quarterly Progress Report for Period Ending November 15, 1951*, ORNL-1221, in press.

OPTICAL AND ELECTRON MICROSCOPY

T. E. Willmarth

F. D. McNeer B. I. Gary

Optical and Electron Microscopic Analyses of HRE Corrosion Films. The structural nature of oxide films that can be formed on stainless steel is of interest in the corrosion problems of the HRP. The preparation of oxide films induced on type-347 stainless steel by immersion in a molten nitrate eutectic (KNO_3-$NaNO_3$) at 400°C and by treatment with HNO_3 at 250°C has already been described.[60]

Optical microscopy of samples that had been electroetched in 10% oxalic acid and immersed in the nitrate eutectic for 72 hr at 400°C showed the formation of a thin, uniform, transparent oxide film that was gold-colored by reflected light and straw-colored by transmitted light. Structural details of the stainless steel matrix could be seen readily through this film. No apparent changes in the metal structure at grain boundaries, strain lines, and inclusions previously mapped and photographed[60] were observed at 1500 X magnification. Electron microscopic examination of the oxide films after they were stripped from the steel samples showed the films to be composed of microcrystallites of nonuniform size ranging from 0.03 to 0.5 μ, with the mean size being in the range of 0.05 to 0.1 micron. Crystallites large enough to be observed had definite geometrical outlines that were roughly hexagonal in form. Bonding between crystallites appeared to be poor, since areas were noted where cracks and openings existed.

Electron diffraction patterns of the stripped film gave the following

TABLE 29

dÅ Values of Oxide Films Induced on Type-347 Stainless Steel Compared with Dow X-ray Index Card dÅ Values for *alpha*-Fe_2O_3

dÅ FOR STRIPPED OXIDE FILM	dÅ FOR *alpha*-Fe_2O_3*
4.06	4.06
3.69	3.67
2.73	2.69
2.51	2.51
2.03	
1.81	1.84
1.67	1.69
1.43	1.45
1.36	1.35

*Dow x-ray index card value.

dÅ values for the measurable lines. In Table 29 the values are compared with dÅ values given by the Dow x-ray index cards for *alpha*-Fe_2O_3. Within the limits of experimental error and the variations known to exist between values obtained by electron and x-ray diffraction, the agreement between the values shown in Table 29 is good and suggests that the *alpha*-Fe_2O_3, which is hexagonal, is formed.

The nature of the lines in the x-ray diffraction pattern showed that the crystallites were randomly oriented. This would suggest that under the conditions of the experiment for the film examined, the orientation of the crystallites composing the oxide layer was independent of the type of crystal exposed in the metal matrix. Although electron diffraction indicates the main constituent of the film to be *alpha*-Fe_2O_3, it should not be assumed that it is the only one.

[60] T. E. Willmarth, F. D. McNeer, and B. I. Gary, "Optical and Electron Microscopic Analysis of HRE Corrosion Films," *op. cit.*, ORNL-1129, p. 43.

Colner[61] found that type-18-8 stainless steel oxide film is always composed of Fe_2O_3 and Cr_2O_3, and there are indications that the iron oxide is concentrated in the outer part of the film. Type-347 is a similar stainless steel. Previous examination of oxide films formed by exposure to HNO_3 at 250°C[61] indicated that the main constituent in these films was Cr_2O_3. This is also in agreement with the findings of Mahla and Nielsen[62] who state that oxide films resulting from passivation in HNO_3 contain a higher per cent of chromium than of iron, possibly as Cr_2O_3.

J. C. Griess, Chemistry Division, reports that two samples of type-347 stainless steel, on which the oxide films formed in the nitrate eutectic bath were allowed to remain intact, were placed in 0.17 *M* UO_2SO_4 solution to determine whether films formed in this manner had protective qualities. Within minutes after immersion at room temperature, the films disintegrated and the bare metal surfaces were exposed.

Type-347 Stainless Steel as a Shadowcasting Material for Electron Microscopy. During development work on electron microscopy techniques, it was found that scrap turnings from type-347 stainless steel made a good shadowcasting material for electron microscopy at fairly high magnifications. Figure 16 shows a dispersion of Dow Latex that was shadowcast with type-347 stainless steel. It will be observed that at an over-all magnification of 50,000X, the type-347 stainless steel substrate film shows little, if any, granularity. Spectrographic analysis of films formed by sputtering type-347 stainless steel indicates only a slight variation in the composition of the original metal and the sputtered film (Table 30).

It was also noted that if the same tungsten filament were used for successive sputtering operations, the per cent of nickel present in the films increased. This might indicate that a saturation point could be reached at which no more nickel would alloy with the tungsten.

Thin films formed in this manner lose the characteristic shiny metallic appearance of stainless steel when heated in air and assume the reddish brown appearance characteristic of oxide films that are formed directly on bulk type-347 stainless steel by heating. Further study of films produced in this way is planned.

Traveling Stage for Welch Densitometer. A traveling stage with uniform movement was designed and

TABLE 30

Comparison of Composition of Type-347 Stainless Steel Before and After Sputtering

CONSTITUENT	CONSTITUENT PRESENT (%)	
	ORIGINAL METAL	SPUTTERED FILM
Chromium	17.2	21.3
Iron	72.9	70.2
Manganese	1.2	1.2
Nickel	8.6	7.2*
Columbium and carbon	0.1	0.1

*Loss of nickel possibly caused by alloying of nickel with the tungsten used as a filament.

(61) W. H. Colner, "Protective Film Formation on Stainless Steels," *Corrosion and Material Protect.* **4**, No. 6, 11 (1947).

(62) E. N. Mahla and N. A. Nielsen, "A Study of Films Isolated from Passive Stainless Steel," *Electrochem. Soc.* **93**, No. 1, 9-16 (1948).

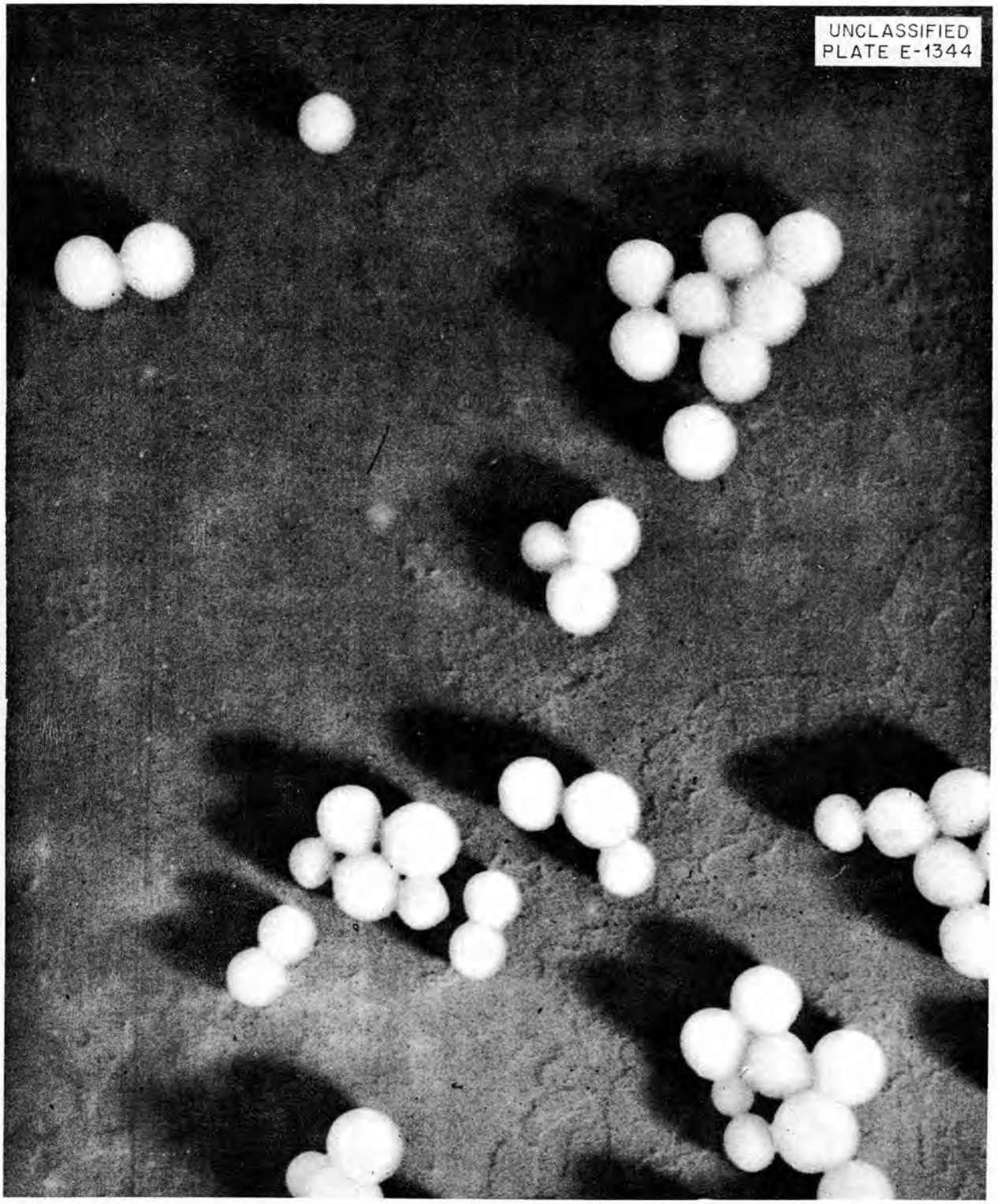

Fig. 16. Dow Latex Shadowcast with Type-347 Stainless Steel. Original 50,000X, photograph reduced 9%.

fabricated for use with a Welch Densitometer for measuring line intensities of electron diffraction patterns. Figure 17 shows a top view of the stage with the diffraction plate in place. A device for photographic reproduction of diffraction patterns was also built.

Additional Services. Other work included particle size studies of U_2O_3 slurries, UO_3, diatomaceous earths, and exchange resins. Assistance was also given to members of the MIT Practice School in a study of the particle size of dust samples collected at sites in the X-10 area.

UNCLASSIFIED
PHOTO P-112

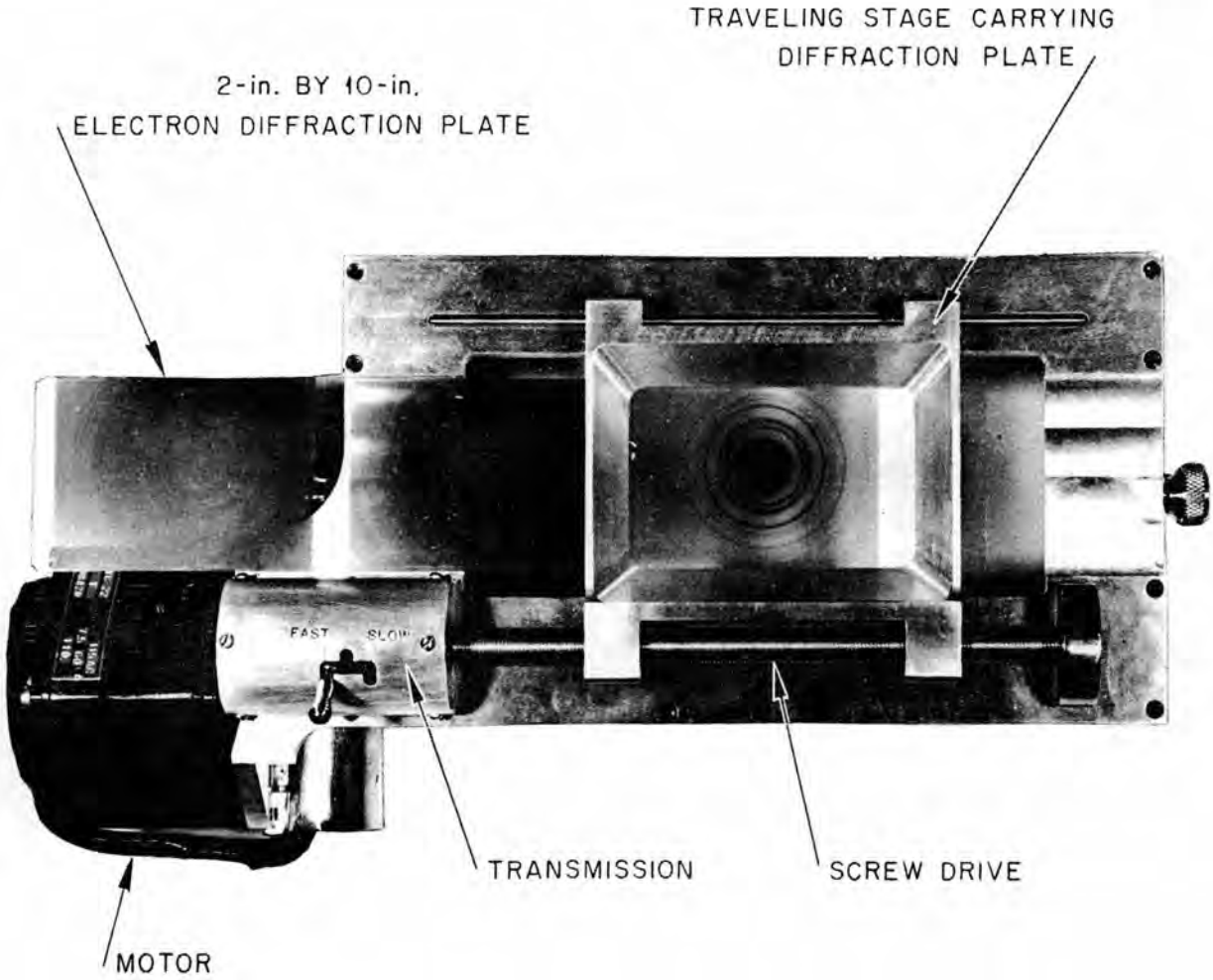

Fig. 17. Traveling Stage for Use with Welch Densitometer in Measuring Electron Diffraction Patterns.

CHEMICAL ANALYSIS OF HRE CORROSION FILMS

D. E. LaValle

The program of chemical analysis of the passivation films developed under various conditions by treatment of type-347 stainless steel with HNO_3 and H_2CrO_4 was completed. The films were removed from the steel by electrolytic attack of the underlying metal in 1:1 aqueous solution of HBr. A few silicon determinations were requested. On these samples the columbium determination had to be omitted since it interferes. Some typical results are shown in Table 31.

TABLE 31

Typical Analytical Results on Passivation Films Formed on Type-347 Stainless Steel

WEIGHT OF FILM (mg)	Fe (%)	Cr (%)	Si (%)	Cb (%)*
2.52	29.8	23.4	2.2	
3.16	27.2	3.2	0.3	
4.65	20.6	10.3		3.4
5.97	34.8	9.7		1.4
1.87	34.8	9.6		6.1
4.95	35.1	9.9		3.7

*The columbium determinations were made spectrographically by C. Feldman after the chemical separation.

SERVICE ANALYSES

A summary of the analytical service analyses performed by the X-10 Analytical Chemistry Division laboratories is given in Table 32. Additional analytical service work of interest is discussed below.

IONIC ANALYSES

P. F. Thomason

Ionic service analyses included special analyses, such as ion-exchange resin capacities, corrosion products in the irradiated ANP fuel eutectic, and gravimetric uranium determinations on HRE fuel solutions. Also, some service work was performed for the Chemical Technology Division in connection with uranium slurry studies.

RADIOCHEMICAL ANALYSES

S. A. Reynolds

Samples were analyzed for protactinium, plutonium, and fission products, and scintillation gamma counting was done for Chemical Technology; activities were identified for Health Physics; and radioisotope products were assayed and their purity checked for the Operations Division.

GENERAL RADIOCHEMICAL ANALYSES

C. L. Burros

Plutonium Separation by Ion Exchange. Assistance was given by W. T. Mullins and H. A. Parker to W. A. Brooksbank in a study of the quantitative separation of plutonium from uranium on anion-exchange resins. This work is discussed in the section in this report on "Radiochemical Analyses."

Laboratory Expansion Program. The laboratory expansion program under way in Room 205 in Building 3019 is approximately 50% complete.

WATER ANALYSIS LABORATORY

J. H. Edgerton

Gold, Cadmium, and Copper in Reactor Metals. The Solid State Division is making a fundamental study of the metallurgy of metals to be used in reactors and is giving particular attention to the effect of radiation on the metals. Pure gold and cadmium samples, which had been melted together in quartz under vacuum, were submitted by that division for determination of gold and cadmium. The samples were dissolved in *aqua regia*, the solution evaporated to dryness in the presence of NaCl, the residue dissolved in 5 *N* HCl, and the solution filtered.[1] The filtrate was made 1.2 *N* in HCl and brought to boil. Hydroquinone solution (3% aqueous) was then added to reduce the gold to the metallic state. The precipitate was removed by filtration, ignited, and weighed as metallic gold. The filtrate containing the cadmium was treated with HNO_3 and $HClO_4$ to decompose the hydroquinone. The cadmium was then precipitated from 3 *M* H_2SO_4 with H_2S. The CdS precipitate was ignited at 500°C, the residue treated with H_2SO_4, ignited again at 500°C, and weighed as $CdSO_4$.

Samples containing gold and copper were also submitted for analyses. The gold was separated and determined quantitatively as described above. After the hydroquinone in the filtrate

[1] F. E. Beamish, J. J. Russell, and J. Seath, "The Determination of Gold," *Ind. Eng. Chem., Anal. Ed.* 9, 174 (1937).

TABLE 32

Summary of Analytical Service Work at X-10 Site for Period September 27 Through December 26, 1951

	NO. OF PERSONNEL		ORNL DIVISIONS REQUESTING ANALYSES											OTHERS REQUESTING ANALYSES				TOTAL DETERMINATIONS
	TECHNICAL	NONTECHNICAL	ANP	ANALYTICAL CHEM.	CHEM. TECH.	CHEMISTRY	ENGR. & MAINT.	HEALTH	HEALTH PHYSICS	METALLURGY	OPERATIONS	PHYSICS	REACTOR TECH.	ADP	HRP	TVA	K-25	
GROUP MAKING ANALYSES			NUMBER OF DETERMINATIONS															
Ionic Development	7	1	58		38	414				4								514
Radiochemical Development	5	0			149				30		32							211
Activation Analyses	1	3		232	40	74			2	13	160	124		16				661
Spectrochemical	4	0		18	117	111		3	5	139	55	20	28		8			504
General Radiochemical	6	5		620	1,796	36			174							371		2,997
Water Analyses	3	6			625	27	189		26	128	23	12	5					1,035
Laboratory and Semi-Works Control	2	11			7,445	197				74	48							7,764
Optical and Electron Microscopy	3	1	30		145	64			4	2	6		169				89	509
Pilot Plant	8	12			3,946													3,946
Radioisotope Production Control	6	17			4,566	20					6,435							11,021
HRE	3	2											301					301
TOTALS	48	58	88	870	18,867	943	189	3	241	360	6,759	156	503	16	8	371	89	29,463

from the gold determination was destroyed with HNO_3 and $HClO_4$, the copper was determined by electrolysis.

Analysis of Aluminum-Silicon Alloys. The Metallurgy Division is studying the diffusion rate of tin into the aluminum-silicon alloys used as bonding agents for slugs in the X-10 graphite pile in an effort to determine the cause of slug failure. Samples of the alloys were submitted for the determination of tin, silicon, copper, and aluminum. They were boiled gently in concentrated HNO_3 to oxidize the tin; the HNO_3 was driven off; and the solution of the samples was completed in concentrated HCl. The solution was filtered and adjusted to 5% HCl content and the tin precipitated with a saturated aqueous solution of phenylarsonic acid.[2] The phenylarsonic acid solution was filtered and the precipitate ignited to SnO at 1100°C. After the filtrate from the tin precipitation was treated with HNO_3 and $HClO_4$ to destroy the phenylarsonic acid, copper in the filtrate was determined by electrolysis. The aluminum was then precipitated with NH_4OH solution, filtered off as $Al(OH)_3$ and ignited to Al_2O_3. The silicon was determined by fusion of a separate portion of the sample with Na_2CO_3. The melt was then dehydrated with HCl and $HClO_4$, the solution filtered, and the residue ignited to SiO_2 at 1000°C.

Analysis of Zirconium-Tungsten Alloys. The metallurgy of zirconium-tungsten alloys is being studied by the Metallurgy Division. Samples of these alloys were analyzed by dissolving them in a HNO_3-HCl-HF mixture. The excess HF was removed by heating; the solution was dehydrated with HCl and filtered; and the tungsten in the filtrate was precipitated with cinchonine, filtered again, ignited, and weighed as WO_3. The zirconium was precipitated with phenylarsonic acid, and the precipitate was filtered off, ignited, and weighed as ZrO_2.

Fluoride in ANP Fuel Eutectic. Studies by the Solid State Division of the radiation damage to the ANP fuel eutectic (UF_4-NaF-KF) required the determination of fluoride content of the eutectic. An apparatus was constructed by H. L. Hemphill according to a modification of the design described by Warf and Cline.[3] With this apparatus the fluoride is completely hydrolyzed by superheated steam that is passed over the sample at 1000°C in a platinum reaction tube. The HF and steam are condensed and titrated with standard NaOH solution by using phenolphthalein as the indicator. It was necessary to add about 100 mg of U_3O_8 to the fuel eutectic that reacted with the products of hydrolysis and thus shifted the equilibrium so that the reaction was complete in about 45 minutes. Numerous samples of UF_4, UO_2F_2, and the ANP fuel eutectic were analyzed with a maximum deviation of 1.5% from the estimated fluoride content of the sample. An attempt is being made to improve this accuracy.

Analysis of Irradiated Versene Solutions. In its MTR and RaLa development programs the Chemical Technology Division is studying the decomposition of Versene irradiated by a cobalt source. Macro- and microdeterminations of Versene in the irradiated Versene samples were made in cooperation with the Ionic Analyses Group. In the macrodetermination, the Versene was determined by titration with 0.1 *N* $CaCl_2$ solution using

(2) J. S. Knapper, K. A. Craig, and G. C. Chandlee, "Phenylarsonic Acid as a Reagent for the Determination of Tin," *J. Am. Chem. Soc.* **55**, 3945 (1933).

(3) J. C. Warf and W. D. Cline, "Pyrohydrolysis in the Analysis of Fluorides and Other Halides," CC-2723 (June 30, 1945).

oxalate ion as the indicator.[4] Microdeterminations were made spectrophotometrically by use of the reaction of Versene with cupric ions to form a chelate type of compound having a maximum in its absorption spectrum at 330 millimicron.[4]

LABORATORY AND SEMIWORKS CONTROL

G. R. Wilson

A slag containing CaI_2, Ca, and CaF_2 is produced in the reduction of PuF_4 to plutonium metal at Los Alamos. Since the Purex group of the Chemical Technology Division is developing a process to recover the plutonium from this slag and from the $MgO-SiO_2$ crucible, analyses for magnesium calcium, and silicon were required. The magnesium is determined volumetrically[5] by precipitation as the 8-hydroxyquinolate dissolved in HCL and titrated with standard bromate solution. Potassium iodide is added and the liberated iodine is titrated with standard $Na_2S_2O_3$ solution. The calcium is determined volumetrically[6] by precipitation as the oxalate and titration with $Ce(SO_4)_2$. A spectrophotometric determination of silica[7] is run by the extraction of silica as molybdosilicic acid with butanol. This is reduced with $SnCl_2$ to form molybdenum blue, and the intensity of the color in the alcoholic solution is measured in a spectrophotometer at 800 millimicrons.

(4) "The Versenes," *Tech. Bull. No. 2*, Sec. III, p. 1-6, Bersworth Chemical Co., Framingham, Mass.

(5) I. M. Kolthoff and E. B. Sandell, *Textbook of Quantitative Inorganic Analysis*, p. 638-639, Macmillan, New York, Rev. 1947.

(6) C. J. Rodden (Editor-in-chief), *Analytical Chemistry of the Manhatten Project*, p. 364, McGraw-Hill, New York, 1950.

(7) L. E. West, H. Delaney, L. Tolmach, and J. I. Watters, "The Spectrophotometric Determination of Silicate by the Molybdenum Blue Method," *Terminal Report on High Purity Analytical Program*, CK-2254, p. 36 (March 1, 1945).

PILOT PLANT CONTROL

C. E. Lamb

Purex Control Manual of Analytical Methods. All Purex analytical control procedures have been collected in the form of a manual for training and reference use in the Pilot Plant laboratory. In some cases these procedures were previously available only in rough draft form or in secret documents. Also, several methods were rewritten to make revisions necessitated by equipment changes, e.g., fluorophotometer, Beckman automatic titrator, KAPL's TTA extraction flask. This manual will also serve as the basis for the Separations Area Control Manual at the Savannah River Works.

New Equipment

Fluorophotometer. The new Model Q-1165 fluorophotometer has been set up in the Building 3019 control laboratory. Its use for a six-week period has effected a 25% reduction in the standard deviation of the daily analyses of routine uranium control samples.

Beckman Automatic Titrator. This instrument is now used for all HNO_3 titrations and supersedes a manual potentiometric titration procedure. Methods have been developed for determining HNO_3 in solutions with uranium concentrations of from 0 to 500 g/liter.

TTA Extraction Flask. The KAPL thenoyltrifluoracetone procedure and equipment for determination of plutonium in aqueous solutions have been adapted for ORNL use, and an accuracy of ±5% has been obtained consistently. The chief advantages of the procedure and equipment are the reduction of radiation exposure time and the possibility of personnel contamination.

New Methods. The following analytical methods have been written up

for use in the Pilot Plant Purex program.

Nitrite Ion. A spot-test method, based on development of a color by napthylamine and sulfanilic acid in the presence of nitrite ion,[8] is used to indicate whether nitrite additions have been made in the Purex Process.

Orthophosphate. The amount of entrained organic phase in aqueous Purex solutions is determined by analyzing the aqueous solution for phosphate,[9] which, as tributyl phosphate, is a component of the organic phase. A method for conversion of phosphate in tributyl phosphate to water-soluble orthophosphate is being investigated by the Ionic Analyses Group.

Sodium Carbonate. The determination of the carbonate content of solutions from the solvent recovery process is accomplished by titration with standard HCl solution using methyl orange indicator.[10]

HRE ANALYSES

U. Koskela

The HRE Analytical Group moved to the 7500 area in November. Analytical service for the project was started on November 19 on a two-shift basis.

(8) F. P. Treadwell, *Analytical Chemistry*, tr. and rev. by W. T. Hall II, 306, Wiley, New York, 1948.

(9) P. F. Thomason, "Colorimetric Estimation of Phosphorus," personal files.

(10) N. H. Furman (ed.), *Scott's Standard Methods of Chemical Analysis* II, 2253, Van Nostrand, New York, 1939.

ANALYTICAL CHEMISTRY DIVISION— Y-12 SITE

RESEARCH AND DEVELOPMENT

R. Rowan, Jr.

DETERMINATION OF OXYGEN IN LEAD

W. K. Miller and D. L. Manning

The importance of the determination of oxygen in lead[1] has greatly declined; therefore it is not contemplated that further development work will be done on this project unless the need again arises.

DETERMINATION OF OXYGEN IN HELIUM

J. C. White and W. J. Ross

This work has been reported elsewhere.[2]

DETERMINATION OF OXYGEN IN SODIUM

J. C. White and W. J. Ross

No work has been done on this project since last reported.[3]

DETERMINATION OF OXYGEN AND NITROGEN IN LITHIUM

J. C. White and W. J. Ross

No work has been done on this project since last reported.[4]

(1) D. L. Manning and W. K. Miller, "Determination of Oxygen in Lead," *Analytical Chemistry Division Quarterly Progress Report for Period Ending September 10, 1951*, ORNL-1129, p. 72.

(2) J. C. White and W. J. Ross, "Determination of Oxygen in Helium," *Aircraft Nuclear Propulsion Project Quarterly Progress Report for Period Ending December 10, 1951*, ORNL-1170, p. 156.

(3) J. C. White and W. J. Ross, "Oxygen in Sodium," *op. cit.*, ORNL-1129, p. 71.

(4) "Determination of Oxygen and Nitrogen in Lithium," *ibid.*, p. 33.

DETERMINATION OF ELEMENTS OF HIGH NEUTRON-CAPTURE CROSS SECTION IN SODIUM

J. C. White and W. J. Ross

No work has been done on this project since last reported.[5]

COLORIMETRIC DETERMINATION OF COBALT

J. C. White and W. J. Ross

No work has been done on this project since last reported.[6]

CLARITY OF BORATED WATER

H. P. House

It was demonstrated that an aqueous solution of potassium tetraborate ($K_2B_4O_7 \cdot 5H_2O$) containing more than 1% of boron retains its clarity when in contact with concrete for at least four weeks. Clarity-retention tests were carried out with various borax-$K_2B_4O_7$ solutions alone and in contact with concrete, inconel, and iron in an effort to produce a cheap solution. Solutions containing various ratios of the two borate salts (total boron, 1%), ranging from the maximum permissible borax (4.0 wt %) to $K_2B_4O_7$ alone, have been observed to retain their clarity at room temperature for at least four weeks. When in contact with concrete, inconel, and iron, however, solutions of these two salts in which the borax concentrations range from 2.9 to 4.0% have been found

(5) "Elements of High Neutron-Capture Cross Section in Sodium," *ibid.*, p. 34.

(6) "Colorimetric Determination of Cobalt," *ibid.*, p. 36.

to deposit a solid, crystalline phase after one to two weeks. Apparently, significant reduction in the cost cannot be effected by the partial replacement of the $K_2B_4O_7$ with borax. Since the $K_2B_4O_7$ solution fulfills the requirements with respect to retention of clarity, no further work is planned for this project. A report summarizing the findings will be prepared.

STUDIES OF DIATOMACEOUS EARTH

J. C. White

The initial work on diatomaceous earth has been described elsewhere.[7] The use of diatomaceous earth as an insulating agent in the ARE is being contemplated by the reactor design group. Studies are being made of the composition of this material with particular attention to elements of high cross section for thermal–neutron capture, of which boron and the rare earths are the most important.

The results of spectrographic determinations of boron for two specimens of diatomaceous earth, as shown in Table 33, indicate 300 to 600 ppm of boron. The first of these materials was of a brand primarily used as a paint pigment, and the second was a "fresh-water" earth having the trade name "Sil-O-Cel." No rare earth elements were detected by the spectrographic method in either material. Because of the abnormally high absorption cross sections of such rare earths as gadolinium, europium, and samarium, the tolerance for these elements is very low, and the limit of detection by the spectrographic technique employed (0.15%) is unsatisfactory. Activation analysis will be tried in an effort to reduce the limit of detection.

TABLE 33

Removal of Boron from Diatomaceous Earths by Washing with 1:1 HCl

IDENTITY OF DIATOMACEOUS EARTH	BORON (ppm)*		BORON REMOVED (%)
	BEFORE WASHING	AFTER WASHING	
Paint Pigment	600	100	84
"Sil-O-Cel"	300	70	77

*Spectrographic determination

The possibility of washing these materials to reduce the boron content has been explored. A preliminary test in which 2 g of earth was shaken for 4 hr with 50 ml of 1:1 HCl solution indicates that this technique is feasible. The results are also given in Table 33. Since the percentage of boron removed by one wash was so favorable, this technique is receiving further attention. In order to ensure good contact between the earth and the washing agent columns of diatomaceous earth samples have been set up and are undergoing elution with 1:1 HCl. Results of the technique are not available at this time. Other eluting agents will be tried, including acids of varying concentrations such as H_2SO_4, H_3PO_4, and HCl, and also CH_3OH. The latter will be successful only if boron is present as H_3BO_3. Washing with acid-CH_3OH mixtures is also contemplated.

The physical structure of diatomaceous earths must remain unaltered by any chemical treatment in order to retain the desirable inherent thermal characteristics; therefore a sample of the earth washed with 1:1 HCl was microscopically examined. These

[7] White and Ross, "Studies of Diatomaceous Earth," *op. cit.*, ORNL-1170, p. 152.

examinations[8] indicated that no significant changes had taken place, except that possibly the percentage of fine particles had increased slightly.

A microscopic study of the two diatomaceous earth specimens in question was made by the Analytical Chemistry Division, X-10 site.[9,10] The results of observations made on the first of these specimens, the paint-pigment earth, have been described.[7] "Sil-O-Cel" was much the same in optical microscopic appearance as the paint-pigment earth except that a higher percentage of the "honey-comb-like" diatoms and fragments of that form were present. "Sil-O-Cel" was also viewed in the electron microscope, and numerous fractures in the honey-comb cell walls were found. The fractures constituted openings with a size range of less than 0.04 to greater than 1.5 micron.

An electron microscopic examination of random material selected from both earths supports the original conclusion that there is a possibility of entrapping small particles in cavities present in the diatoms. Inasmuch as cell sizes in the honey-comb form vary over such a wide range, the limits of entrapment are difficult to estimate. In the larger honey-comb cells, particles of diameter between 0.3 and 2 μ might be entrapped, at least temporarily. This range appreciably lessens with decreasing size of individual diatoms.

(8) T. E. Willmarth, private communication, December 3, 1951.

(9) T. E. Willmarth, "Microscopic Study of a Submitted Sample of Diatomaceous Earth," ORNL CF-51-11-12 (Nov. 1, 1951).

(10) T. E. Willmarth and F. D. McNeer, "Microscopic Study of Diatomaceous Earth" (addendum) ORNL CF-51-11-89 (Nov. 16, 1951).

DETERMINATION OF NICKEL, NICKEL OXIDE, AND AVAILABLE OXYGEN IN ALKALI HYDROXIDES

J. C. White

This work has been reported elsewhere.[11]

DETERMINATION OF OXYGEN IN SODIUM-POTASSIUM ALLOY

J. C. White and W. J. Ross

This work has been reported elsewhere.[12]

STUDY AND ANALYSIS OF FLUORIDE EUTECTICS

J. C. White

Analytical studies of the proposed ARE fuel and coolant eutectics, "Fulinak" and "Flinak-20," respectively, are confined at present to four lines of inquiry: (1) pH of aqueous solutions of the eutectics and of their individual components, (2) reagents and methods for dissolution, (3) composition with respect to principal components, and (4) analysis for impurities (iron, nickel, chromium, manganese, and molybdenum).

pH of Aqueous Solutions of Alkali Fluorides. A study of the pH of aqueous solutions of the coolant eutectic, Flinak-20, and of its components has been discussed.[13] It was found that the pH of a saturated solution of Flinak-20 is 9.8 – approximately that of a solution of KF.

(11) J. C. White, "Determination of Ni, NiO, and O in Alkali Hydroxides," *op. cit.*, ORNL-1170, p. 153.

(12) J. C. White and W. J. Ross, "Determination of Oxygen in NaK," *op. cit.*, ORNL-1170, p. 155.

(13) J. C. White, "Studies of Ternary Alkali Fluoride Eutectic," *op. cit.*, ORNL-1170, p. 154.

The pH values at room temperature of saturated aqueous solutions of the fuel eutectic, Fulinak, prepared by two methods, are shown in Table 34.

TABLE 34

pH of Saturated Aqueous Solutions of Fulinak*

VESSEL USED FOR EUTECTIC PREPARATION	ADDED TO EUTECTIC	pH
Graphite	No addition	7.6
Nickel	Type-316 stainless steel and inconel	7.4

*KF:NaF:LiF:UF_4 = 56.3:10.2:25.8:7.7 by weight. All anhydrous salts.

The small difference in pH observed as a consequence of the change of vessel and of addition of stainless steel does not appear to be significant. The pH of the saturated solution of the Fulinak was considerably lower than that of Flinak-20. A possible explanation for the higher acidity of the Fulinak solution may be that UF_4, a component of Fulinak, is more readily hydrolyzed in the presence of traces of moisture during the fusion process than are alkali fluorides under similar conditions of moisture content and heating.

Dissolution of the Eutectics. Flinak and Fulinak are extremely hard, and considerable mechanical work is required in the preparation of samples for analytical study. The solubility of either eutectic in water is limited by the high content of slightly soluble LiF and, in the case of Fulinak, UF_4. Acids attack Flinak slowly, with the rate of solution depending largely upon the particle size.

The dissolution of the eutectics for subsequent analytical treatment is best accomplished by digestion in a mixture of $HClO_4$ and H_2SO_4. Although either acid alone may be used for dissolving these substances, H_2SO_4 attacks Fulinak very slowly. Both are, however, subject to certain disadvantages. Dissolution of the eutectic in $HClO_4$ results in the precipitation of $KClO_4$, which, in addition to being slightly soluble in $HClO_4$ solutions, is soluble in water only with difficulty. H_2SO_4 attacks the eutectics too slowly for practical purposes. A mixture of 5 ml of $HClO_4$ and 10 ml of H_2SO_4 when used with 2 g of eutectic is not subject to these disadvantages; dissolution is complete in 1 hr, and the resultant sulfate solution is suitable for the subsequent steps in the analysis. In order to accelerate the removal of fluoride, 2 g of H_3BO_3 is also added to the mixture before evaporation.

Determination of the Major Components. The determination of sodium, potassium, and lithium, when present in the proportions found in these eutectics, is rather difficult. Some work has been done on the gravimetric and flame-photometric techniques. Since it appears, however, that a determination of total alkali will provide all the information desired, the individual determinations will be dispensed with until more detailed analyses become necessary. Total alkali can be determined gravimetrically by weighing the mixture of alkali metal sulfates after evaporation. When uranium is present it will be removed by precipitation with NH_4OH. Preliminary results indicate that the extent of coprecipitation of $Na_2U_2O_7$ and $K_2U_2O_7$ is significant enough to warrant a double precipitation. Uranium will be determined volumetrically if the sample size permits.

Total fluoride will be determined by the pyrohydrolysis technique with which excellent results have been

obtained so far. It has been necessary, however, to modify the technique by increasing the time of pyrohydrolysis to at least 2 hr and adding a ten-fold excess of U_3O_8 as an accelerator.

Determination of Impurities. As a part of the corrosion test program, the trace impurities – iron, nickel, chromium, molybdenum, and manganese – will be determined. The usual colorimetric procedures for iron by the α,α'-dipyridyl method and for nickel by the dimethylglyoxime method have been applied successfully to these eutectics with little modification. Methods for the determination of chromium, manganese, and molybdenum have been studied more extensively and are discussed in some detail in the following.

Chromium. The colorimetric determination of chromium by the use of diphenylcarbazide is a well-established method. The oxidant used in this method, however, has been a source of much investigation, as has been previously reported.[14] Most recently, $HClO_4$ has been used for this purpose, but low results have been obtained. Urone and Anders[15] proposed the use of $NaBiO_3$ as the oxidant in this determination, and it appears to be suitable for application in the present case. Briefly, the method consists of the oxidation of chromium with $NaBiO_3$ in 5% H_2SO_4 solution, removal of the bismuthate by filtration, and addition of the chromogenic reagent.

By use of a 2% K_2SO_4 medium to approximate the conditions to be encountered in the analysis of these eutectics, a standard colorimetric curve for chromium was prepared. The data for such a curve are shown in Table 35. The degree of variation in the factor is an indication of the precision of the method. These values indicate a variation of about 5 to 10%.

TABLE 35

Determination of Chromium by the Diphenylcarbazide Method

Oxidant: $NaBiO_3$

Conditions: 2% K_2SO_4 medium; 25-ml volume; 1-cm cells; optical density determined at 540 mμ

CHROMIUM (μg/ml)	OPTICAL DENSITY	FACTOR*	DEVIATION FROM AVERAGE
0.04	0.021	1.90	-0.06
0.12	0.059	2.03	+0.07
0.20	0.100	1.98	+0.02
0.32	0.171	1.87	-0.09
0.40	0.195	2.05	+0.09
0.52	0.252	2.06	+0.10
0.60	0.305	1.97	+0.01
0.72	0.379	1.90	-0.06
0.80	0.412	1.94	-0.02
1.00	0.473	2.07	+0.11
1.2	0.607	1.98	+0.02
1.4	0.700	2.00	+0.04
1.6	0.821	1.95	-0.01
1.8	0.923	1.95	-0.01
	Average	1.96	

*Factor = chromium concentration (μg/ml) per optical density.

The effect of various concentrations of uranium in the K_2SO_4 solution containing 0.4 μg of chromium per ml was determined. The results are shown in Table 36. The presence of uranium has a tendency to produce results that are slightly high. Uranium at a concentration of about 1.68 mg/ml is expected from a solution of the eutectics. No serious increase in the value of the factor was found until the concentration of uranium was increased above this value by a factor of 10.

(14) J. C. White and W. J. Ross, "Determination of Metallic Corrosion Products," *op. cit.*, ORNL-1129, p. 74.

(15) P. F. Urone and H. K. Anders, "Determination of Small Amounts of Chromium in Human Blood, Tissues, and Urine," *Anal. Chem.* 22, 1317 (1950).

TABLE 36

Effect of Uranium(VI) on the Determination of Chromium by Diphenylcarbazide

Oxidant: $NaBiO_3$

Chromium concentration: 0.25 μg/ml

Conditions: 2% K_2SO_4 medium; 25-ml volume; 1-cm cells; optical density determined at 540 mμ.

URANIUM (mg/ml)	FACTOR*
0	2.02
0.17	2.04
1.68	2.22, 2.19
4.2	2.17
8.4	2.15
16.8	2.33

*Factor = chromium concentration (μg/ml) per optical density.

Manganese interferes in this determination since any manganese present is oxidized to permanganate by the bismuthate, and the absorption maximum for permanganate is in the same region as that for the chromium-diphenylcarbazide complex. The permanganate color, however, can be destroyed by the addition of NaN_3. Although no difficulty is expected from the presence of manganese, this factor is being investigated.

A number of factors remain to be studied in more detail, principally, the stability of the complex with respect to time. Literature sources indicate that a 0.2 *N* H_2SO_4 medium is ideal. The acidity of the solution in the tests that have been conducted was a close approximation to this value, but a 10% decrease in optical density was noted over a period of 1 hour. The fading can be minimized by measuring optical densities of standards and samples after a definite time-interval. Efforts are being made to eliminate fading altogether and also to determine the optimum conditions of oxidation.

Although certain details remain to be investigated, it appears that the $NaBiO_3$ method will be suitable for the determination of chromium in eutectics. The lower limit of detection is approximately 1 ppm, based on the weight of the solid.

Manganese. No difficulties are anticipated in the determination of manganese by the well-established, simple, and rapid method that depends upon the color of the permanganate ion. The manganese is oxidized by $NaBiO_3$ in a 5% H_2SO_4 medium at 75°C; the excess bismuthate is removed by centrifugation and the optical density is determined at 525 millimicrons. This method is already in use on the eutectics being studied. Although sufficient data are not yet available to indicate the precision of the method, the results appear to be satisfactory. The lower limit of sensitivity of the determination is 10 ppm, based on the weight of solid sample. Unless this limit proves to be too high the method can be employed.

Molybdenum. A common colorimetric method of determining trace quantities of molybdenum is based on the measurement of the absorbancy of the colored thiocyanate complex, after reduction of molybdate, and extraction of the complex. Experience in this and a number of other laboratories has shown that the method is unsatisfactory from the standpoint of color stability and that the extraction is troublesome. A considerable amount of work on this problem has been reported in the literature. The method currently under study follows the work of Ellis

and Olson[16] who advocate the use of acetone to stabilize the thiocyanate complex and also to serve as the reductant. A particular advantage of this modification is that no extraction is necessary. Iron interferes but is of no consequence since the iron is eliminated by precipitation and removal as $Fe(OH)_3$. In the case of the Fulinak eutectics this is a special advantage, since the uranium serves as an excellent carrier for the $Fe(OH)_3$.

In the above-mentioned procedure the colored complex is developed in HCl solution at 60 to 70°C. The complex is stable for periods up to 48 hours. Results thus far indicate that if 5-cm cells are used, the lower limit of sensitivity of the determination is 1 to 3 ppm, based on the weight of sample. A set of results on standard solutions is shown in Table 37. Data are presently being compiled on standard solutions containing iron.

TABLE 37

Spectrophotometric Determination of Molybdenum as the Thiocyanate Complex

Reductant: acetone

Conditions: 2% K_2SO_4 medium; 50-ml final volume; 5-cm cells; optical density determined at 420 mμ.

MOLYBDENUM (μg/ml)	FACTOR*
0.5	3.57
0.8	3.52
1.0	3.64
1.4	3.58
2.0	3.57
3.0	3.51

*Factor = molybdenum concentration (μg/ml) per optical density.

A method for the determination of molybdenum described by Ayres and Tuffly,[17] which employs phenylhydrazine hydrochloride to form a colored complex with molybdenum(VI), was studied in some detail. The advantage of this method lies in its simplicity; the complex is developed in a 50% CH_3COOH medium upon boiling with the solid reagent, and the absorbancy of the solution is determined. Efforts to duplicate the reported results, however, have been unsuccessful thus far. The reported sensitivity of the method has not been attained. Several different lots of the reagent, which is known to be rather unstable, were tried but there was no improvement. This method has been abandoned in favor of the one previously described, and no further work will be done unless the other method proves to be unsuitable.

DETERMINATION OF BORON IN TRACE QUANTITIES

J. C. White and W. J. Ross

In connection with the study of diatomaceous earths and because of the importance of boron in reactor materials analysis, several methods for the determination of trace amounts of boron are being investigated. The method of Ellis *et al.*[18] employs 1,1'-dianthrimide, which forms a deep blue complex with boron in a H_2SO_4 medium. Excellent agreement with Beer's Law was obtained in the range of 0.05 to 0.5 μg/ml. This method offers obvious advantages in extremely low concentrations, and

(16) R. Ellis, Jr. and R. V. Olson, "Photometric Determination of Molybdenum by Acetone Reduction of the Thiocyanate," *Anal. Chem.* **22**, 328 (1950).

(17) G. H. Ayers and B. L. Tuffly, "Spectrophotometric Determination of Molybdenum with Phenylhydrazine Hydrochloride," *Anal. Chem.* **23**, 304-308 (1951).

(18) G. H. Ellis, E. G. Zook, and O. Baudisch, "Colorimetric Determination of Boron Using 1,1-Dianthrimide," *Anal. Chem.* **21**, 1345-8 (1949).

tests in this laboratory on standard solutions of boron indicated that it is very much more sensitive than originally reported. Results are given in Table 38.

TABLE 38

Spectrophotometric Determination of Boron with 1,1'-Dianthrimide

Conditions: 1-cm cell; 10-ml final volume; optical density determined at 620 mμ.

BORON (μg/ml)	FACTOR* x 10^3
0.0005	6.66
0.001	7.04
0.002	7.09
0.003	7.84
0.004	5.74
0.005	5.80

*Factor = boron concentration (μg/ml) per optical density.

The optical density values determined against a blank of the reagent that had been checked against water ranged from 0.075 to 0.862 for the above concentration limits. A plot of these values agrees fairly well with Beer's Law, although a definite low trend is noted at higher concentrations. As may be seen, the readings indicate a sensitivity approximately 100 times greater than the original article stated. The agreement between the wavelengths of maximum absorption of the reagent and of the complex measured in this laboratory and those reported by the authors indicates that there is no discrepancy in the absorption measurements. A ten-fold error was found in the calculation of the concentration of the standard solution of boron used by Ellis *et al.*,[18] and it is possible that another ten-fold error may have been made. This method has not yet been applied to actual samples with any degree of certainty. Further work is contemplated in an effort to define the concentration limits precisely.

TABLE 39

Spectrophotometric Determination of Boron by Carmine

Conditions: 1-cm cells; 10-ml final volume; optical density determined at 585 mμ.

BORON (μg/ml)	FACTOR*	
	A	B
1.0	4.00	4.76
3.0	4.41	4.00
4.0	5.26	
5.0	5.32	4.63
6.0	4.88	
7.0		4.55

*Factor = boron concentration (μg/ml) per optical density.

A. Standards contained pure H_3BO_3.

B. Standards contained 0.1 ml of 0.5 *N* NaOH and 0.2 ml of 2 *N* Na_2CO_3 in addition to H_3BO_3.

A second method, that of Hatcher and Wilcox,[19] employing carmine as the chromogenic agent was tested, but it is not so sensitive as the one previously described. The boron complex is blue-red in color, and a H_2SO_4 medium is also required. Standard curves were prepared for the range of 1 to 6 ppm of boron. The results are given in Table 39. The data show that the absorption follows Beer's Law and that the presence of NaOH and Na_2CO_3 is beneficial. The method will be tried on a series of solutions containing higher concentrations of boron, since the maximum

[19] J. T. Hatcher and L. V. Wilcox, "Colorimetric Determination of Boron Using Carmine," *Anal. Chem.* 22, 567 (1950).

optical density for boron concentrations of 6 μg/ml was only 0.154. The applicability of the method to actual samples will also be investigated.

DETERMINATION OF URANIUM BY CELLULOSE COLUMN EXTRACTION METHODS

W. K. Miller C. M. Boyd
M. L. Druschel

Difficulties were encountered in the determination of uranium in low-grade ores, particularly in phosphate ores such as Bartow clays, and therefore a study was made of the separation of uranium from interfering elements by extraction in a cellulose column. This method was developed and successfully used in England and Canada.[20,21]

It was believed that the use of the thicoyanate method[22] would allow an accurate determination of uranium in the troublesome concentration range that falls between the optimum concentrations required for the fluorometric and ascorbic acid[23] (colorimetric) methods. Although the thiocyanate method has been avoided in the past because it is more subject to interference by foreign ions than the ascorbic acid method, the separation of uranium from interfering elements by column extraction has proved to be sufficiently complete to warrant the use of the thiocyanate method.

Briefly, the column extraction consists of transferring a HNO_3 solution of the sample to an activated cellulose column and eluting the $UO_2(NO_3)_2$ with 5% HNO_3 in ether (V/V). Phosphate, which inhibits the movement of uranium through the column, can be complexed by adding solid $Fe(NO_3)_3$ to the sample. Best results are obtained by the use of a "wad," which is formed by addition of activated cellulose pulp to the solution of the sample until complete adsorption of the sample is ensured. The wad is then transferred to the column, and the $UO_2(NO_3)_2$ is eluted. Water is added to the eluate and the ether is evaporated. The resulting solution is finally boiled with HNO_3 and $HClO_4$ to destroy any residual organic material before the determination of uranium is carried out.

The column and pulp for these studies were prepared essentially as described by Rabbitts and coworkers.[21] The final solution of the sample to be extracted always contained 25% HNO_3, and the volume was maintained between 15 and 25 milliliters. A minimum amount of water is essential since the extraction is dependent on the principle of partition chromatography, and all the aqueous phase must be completely adsorbed in the top of the column to effect retention of the impurities in that region.

Initial tests carried out on pure solutions of $UO_2(NO_3)_2$ indicated complete extraction of uranium by 150 ml of eluate (5% HNO_3 in ether) in a 7-cm column without the use of a wad. Results were low, however, on synthetic samples containing $AlPO_4$ and $Fe(NO_3)_3$ that were extracted in the same manner. The latter results are illustrated in Table 40 (samples 1 to 7).

---

(20) F. H. Burstall and R. A. Wells, "Inorganic Chromatography on Cellulose. Part V. The Use of Columns of Cellulose in Combination with Organic Solvent Extraction for the Separation of Uranium from Other Metals," *Analyst* **76**, 396 (1951).

(21) F. T. Rabbitts and Co-workers, "The Determination of U_3O_8 in Ores and Solutions - Cellulose Column Method," *Department of Mines and Technical Surveys*, Canada, NP-1529 (Sept. 2, 1949).

(22) C. Crouthamel, C. Johnson, R. Vogel, "Development of Techniques for Analysis for Uranium in Hydrofluoric Acid-Zirconium Solutions," *Argonne National Laboratory Summary Report, October, November, and December, 1950*, ANL-4588, p. 46.

(23) C. D. Rothenberger and W. R. Grimes, "Use of 1-Ascorbic Acid as a Colorimetric Reagent for Uranium," H-4.360.13 (June 9, 1947).

TABLE 40

Determination of Uranium in Synthetic Samples by Cellulose Column Extraction

0.85 mg of uranium in each sample

SAMPLE NO.	URANIUM FOUND (mg)[a]	
	FIRST ELUATE (150 ml)	FIRST ELUATE + SECOND ELUATE (total vol. = 250 ml)
1	0.63	
2	0.64	
3	0.77	
4[b]	0.79	
5[c]	0.56	
6	0.76	
7	0.81	
8	0.60	0.80
9	0.76	0.83
10		0.81
11		0.83
12		0.81
13		0.82
14		0.81
15		0.85
16		0.82
17		0.84
18		0.84

[a]Determinations were made by the thiocyanate method.

[b]Contained no $AlPO_4$ or $Fe(NO_3)_3$.

[c]Contained 3.2 mg of $AlPO_4$ but no $Fe(NO_3)_3$.

The movement of iron through the column in several tests prompted the use of the previously described wad. Very little difficulty was encountered on subsequent samples by the interference of iron.

Because of the low results obtained by eluting the synthetic sample with only 150 ml of HNO_3-ether solution, tests were made by collecting 150 ml of eluate followed by an additional 100 ml, and uranium was determined separately on each portion in two cases. These results are shown in Table 40 (samples 8 and 9). Nine additional tests were carried out in which one 250-ml eluate was collected and analyzed. The results are also shown in Table 40. All the synthetic samples contained 3.2 mg of $AlPO_4$ and 2.0 g of $Fe(NO_3)_3 \cdot 9H_2O$ unless otherwise noted.

The extremely low uranium recovery on sample 5 illustrates the necessity of adding iron when phosphate is present. Preliminary tests on five portions of a Bartow clay head sample led to the same conclusion. Higher

values were obtained on samples to which $Fe(NO_3)_3$ was added.

The results on samples 8 to 18 indicate 95 to 100% extraction with 250 ml of eluate. Two grams of solid $Fe(NO_3)_3$ appears to be sufficient to control the interference caused by phosphate on a sample of the size normally taken. It appears that excellent results can be obtained on materials that contain only the above constituents and any noninterfering elements.

The precision of the method has not been so good with Bartow clay samples as it was on the synthetic samples, but the results are, nevertheless, encouraging. The ores were fumed with HNO_3, $HClO_4$, and HF to render them soluble and to remove silica. The residue was taken up in 25% HNO_3 and 2 g of $Fe(NO_3)_3$ was added; the solution was adsorbed on a wad, transferred to the column, and the uranium eluted and determined as previously described.

The first determinations were made in order to establish the optimum conditions, e.g., sample size, quantity of $Fe(NO_3)_3$, length of column, volume of eluate, etc. These tests indicated that an approximately 0.5-g Bartow clay head sample is convenient for determining uranium by the thiocyanate method. When a sample of this size is used a small quantity of residual solid remains in the 15 ml of 25% HNO_3 solution that is adsorbed on the wad, but this does not appear to affect the elution of uranium. Two grams of $Fe(NO_3)_3$ was found to be sufficient to complex the phosphate, whereas 250 to 300 ml of eluate is required to obtain complete (maximum) elution of uranium. The use of an ammonia precipitation as a step in the preparation of the sample for extraction was found to have no advantages.

Uranium was determined in the eluate by two independent colorimetric methods - the thiocyanate and the ascorbic acid methods. Treatments of the Bartow clay samples prior to color formation, however, were identical.

The method was tested by a series of determinations on the same Bartow clay sample to which standard additions of uranium had been made. The values obtained after correction for the added uranium are given in Table 41 together with those obtained on the samples to which no standard additions were made.

It is believed that the close correspondence between the values, irrespective of the colorimetric method applied or the presence of standard additions, is reason for reliance on the results. A choice of the methods (thiocyanate or ascorbic acid) of color development on actual samples will depend on the sensitivity required. The thiocyanate method is about five times as sensitive as the ascorbic acid method. The values by both methods are in close agreement with the average of those obtained by the diethyl ether extraction method. However, there is a large variance in the latter values that were obtained by the Ionic Analysis Group of this laboratory.

The cellulose column method is adaptable to rapid, multisample operation, but the large volumes of ether that must necessarily be evaporated create a fire and health hazard. It is expected that the method will be applied principally to special samples not easily handled by the methods presently in operation.

TABLE 41

Determination of Uranium in Bartow Clay After Cellulose Column Extraction

TEST	URANIUM (ppm)			
	THIOCYANATE METHOD		ASCORBIC ACID METHOD	
	X	DEVIATION ($X - \bar{X}$)	X	DEVIATION ($X - \bar{X}$)
1	590	+66	500	-15
2	578	+54	525	+10
3	615	+91	486	-29
4	583	+59	549	+34
5	548	+24	516	+ 1
6	532	+ 8	523	+ 8
7	506	-18	482*	-33
8	484	-40	504*	-11
9	481	-43	477*	-38
10	461	-63	565*	+50
11	466*	-58	574*	+59
12	506*	-18	474*	-41
13	461*	-63		
14	582*	+58		
15	539*	+15		
16	446*	-78		
Average ($\bar{X}$)	524		515	
Standard deviation (ppm)	512		34	

*Samples to which standard additions of uranium had been made.

This work concludes the development work on the cellulose column extraction of uranium using HNO_3 in ether as the eluting agent, but at a later date it is planned to make a study of the use of higher ethers and of other organic solvents such as 2-methyltetrahydrofuran as a replacement for diethyl ether.

DETERMINATION OF TRACE AMOUNTS OF THORIUM

W. K. Miller and C. M. Boyd

The use of 2-hydroxy-3,6-disulfonaphthaleneazobenzene-2-arsonic acid

(Thoron)[24] as a colorimetric reagent for the determination of thorium produced questionable results when applied to an ore containing microgram quantities of thorium. A survey of the literature indicated that extraction of thorium from the ore, followed by colorimetric estimation, was probably the best method available for the determination of thorium in the concentration range of interest and was believed to be the best solution to the problem. Extraction in a cellulose-alumina column by 12.5% HNO_3 in ether (V/V)[25] is reported to separate thorium from most elements except uranium.

Initial tests were made with synthetic solutions on columns containing cellulose but no alumina, and only about 33% recovery of thorium was obtained. When synthetic solutions containing 12.6 μg of thorium in HNO_3 solution were adsorbed in a column containing activated alumina over cellulose and eluted with 12.5% HNO_3 in ether, about 28 μg of thorium was indicated by analysis of the eluate. Determinations of column blanks and subtraction of the blanks from the quantity of thorium found resulted in values approaching the thorium content of the synthetic samples, but it was desirable to eliminate the blanks if possible.

It seemed likely that the element or elements producing the column blank were being extracted from the alumina. Spectrographic analysis of the alumina proved that both thorium and zirconium (an interfering element) were below the limits of detection (zirconium, less than 0.08%; thorium, less than 0.3%) by the spectrographic method employed, but not necessarily absent. The addition of phosphate to the sample to prevent the extraction of zirconium did not lower the blank and rendered the recovery of thorium incomplete. The addition of tartaric acid, however, eliminated the blank. Recovery of the thorium on the first sample employing tartaric acid was only 83% complete, but about 95% recovery was obtained on three additional samples by using a greater volume of eluate. The tartaric acid method is presently being tested with samples of low-grade ores containing thorium.

The tentative procedure involves dissolution of the sample in 25% HNO_3, the addition of 0.5 g of tartaric acid, and adsorption of the solution on a wad of activated alumina. The wad is transferred to a 10-cm column of activated cellulose, and thorium is eluted with 300 ml of 12.5% HNO_3 in ether. The ether is evaporated and thorium is determined colorimetrically by the use of the Thoron reagent.

ANALYSIS OF BARIUM HYDROXIDE

W. K. Miller and D. L. Manning

In connection with a study by the ANP Reactor Chemistry Group of the use of hydroxides as moderators, the analysis of $Ba(OH)_2$ has become of interest.

Barium Oxide. Since the acid titration of $Ba(OH)_2$ prepared by dehydration of $Ba(OH)_2 \cdot 8H_2O$ under reduced pressure indicated a purity of greater than 100%, it was believed that BaO might be present. In order to confirm the presence of the oxide, it was necessary to develop an analytical method. Carbonate and peroxide were determined to be absent; therefore

(24) P. F. Thomason, M. A. Perry, and W. M. Byerly, "A Colorimetric Method for the Determination of Microgram Amounts of Thorium," ORNL-90 (July 9, 1948).

(25) E. C. Hunt, G. H. Smith, and A. F. Williams, "New Chromatographic Procedures for the Determination of Thorium and Uranium in Minerals and Ores," *Chemical Research Laboratory, Teddington*, CRL-AE-70 (November 1950).

it seemed feasible to ignite the sample to 500°C in a dry, oxygen atmosphere and determine the peroxide content by oxidation-reduction methods. $Ba(OH)_2$ is stable at this temperature, but BaO reacts with oxygen to form BaO_2.

A report of spectrographic analysis indicating the presence of about 3% of strontium led to the belief that the discrepancy in the results of the $Ba(OH)_2$ titration was caused by the presence of $Sr(OH)_2$ instead of BaO. Before any experimental work on the project had been done, therefore, the analysis for BaO was abandoned in favor of the determination of strontium.

Strontium. The separation of large quantities of barium from strontium by chemical means does not seem feasible, but flame photometric studies with Beckman flame spectrophotometer (oxyacetylene burner) indicate that the interference of barium on the strontium line at 460.7 mμ is small. A working curve that was prepared from standard solutions of strontium in barium indicates that as low as 25 ppm of strontium can be determined with accuracy of about 10%. Values of 1.1 and 1.3% strontium were obtained for two samples of $Ba(OH)_2$ after correction for strontium in the $BaCl_2$ that was used as a standard (0.001% reported on the label).

SEPARATION OF URANIUM FROM TRACE ELEMENTS – TBP EXTRACTION

O. Menis and E. K. Wilson

The need for providing more rapid, sensitive, and accurate methods for the determination of trace elements in uranyl salt solutions of high uranium concentration (400 mg of uranium per ml) has led to the continuation of studies of extraction procedures for the separation of uranium from contaminating elements. As previously reported,[26] the use of tributyl phosphate (TBP), a suitable complexing agent for $UO_2(NO_3)_2$, is promising from the standpoint of trace element recovery.

The present investigation deals with further studies of suitable salting-out agents for use with TBP and of conditions that will assure both effective removal of uranyl ions and complete recovery of microgram quantities of iron, chromium, manganese, and nickel.

A preliminary study of the extraction of uranium with 75% TBP in benzene was made with the following salting-out agents: (1) saturated aqueous solution of NH_4NO_3, (2) saturated aqueous solution of $NaNO_3$, (3) saturated aqueous solution of $Al(NO_3)_3$, (4) saturated aqueous solution of $Ca(NO_3)_2$ in 5 *N* HNO_3, and (5) 5 *N* HNO_3.

Experiments were carried out in which 778 mg of uranium in 20 ml of a saturated solution of the salting-out agent was extracted with both 20 and 40 ml of 75% TBP in benzene. The solutions were extracted for 30 min at room temperature.

Uranium was stripped from the organic phase with a saturated solution of Na_2SO_4, and both the stripping solutions and the aqueous phases were analyzed colorimetrically for uranium by the thiocyanate method.[22] An average recovery of uranium of 97 ± 6% was obtained. The results are shown in Table 42. On the basis of these tests, $NaNO_3$, $Al(NO_3)_3$, and $Ca(NO_3)_2$ appear to be satisfactory salting-out agents from the standpoint of uranium extraction. The final

(26) F. E. Jenkins and O. Menis, "Recovery of Trace Elements in Extraction of Uranium from Uranyl Solutions," *Analytical Chemistry Division Quarterly Progress Report for Period Ending June 26, 1951*, ORNL-1113, p. 79.

TABLE 42

Distribution of Uranium in Organic-Aqueous Phases

TBP Extraction

SALTING-OUT AGENT	ORGANIC/AQUEOUS (V/V)	DISTRIBUTION COEFFICIENT (C_{org}/C_{aq})
NH_4NO_3	1	25
	2	15
$NaNO_3$	1	400
	2	300*
$Al(NO_3)_3$	1	>500**
	2	>500**
	2	400*
$Ca(NO_3)_2$ in 5 *N* HNO_3	1	30
	2	100
5 *N* HNO_3	1	60
	2	30

*The aqueous phase was analyzed polarographically.

**No uranium was detected in the aqueous phase.

selection will depend on a study of the suitability of the aqueous phase for subsequent trace metal determinations.

An investigation is being made of the recovery of trace quantities of iron, chromium, nickel, and manganese from solutions containing 400 mg of uranium per milliliter. These elements are being determined polarographically.

On the basis of available information and preliminary polarographic studies, the following modifications in the experimental conditions will be tested: (1) $NaNO_3$ will be used as the salting-out agent to facilitate polarographic determination of the trace elements; (2) CCl_4 will be used as the diluent for TBP (Moore[27] obtained higher *K* values for CCl_4 dilution of TBP than for C_6H_6 dilution); and (3) extractions will be made at temperatures below room temperature (Ferguson and Runion[28] found that larger extraction coefficients were obtained at lower temperatures).

ANALYSIS OF URANYL SULFATE SOLUTIONS

Determination of Uranium by Spectrophotometric Measurements (O. Menis and C. K. Talbott). No work has been done on this project since the last report.[29]

[27] R. L. Moore, "The Extraction of Uranium in the Tributyl Phosphate Metal Recovery Process," HW-15230 (Sept. 1, 1949).

[28] D. E. Ferguson and T. C. Runion, "Tributyl Phosphate Solvent Extraction of Uranium from Metal Waste - Laboratory Investigation," ORNL-260 (Oct. 7, 1949).

[29] O. Menis, C. K. Talbott, F. E. Jenkins, and J. E. Lee, "Analysis of Uranyl Sulfate Solutions," *op. cit.*, ORNL-1129, p. 59.

Determination of Uranium(IV) (O. Menis and C. K. Talbott). Difficulty encountered in obtaining complete recovery of uranium(IV) on standard samples in the HRE analytical laboratory led to the testing of the method[30] by the Development Group. The excellent results obtained (99.1 ± 1.5% recovery) prove that the method is reliable. The high optical density of the reagent blank (0.4) indicates that the original difficulty might have been caused by decomposition of the thiocyanate reagent.

Determination of Uranium by Density Measurements (J. E. Lee, Jr.). A density method for the determination of uranium in aqueous solutions of $UO_2(SO_4)_2$ has been used for control purposes for the past several weeks by one of the groups attached to the Homogeneous Reactor Project. The analytical results obtained have been satisfactory for the majority of the samples tested. For the purpose of further evaluating the method and comparing it with the $Ce(SO_4)_2$ titrimetric procedure, a statistical analysis was made of the results obtained on 27 of these samples, randomly selected. A result by each method was available for each sample. The standard deviation was 1.2% and the limit of error (at a 95% confidence level) was 2.5%. The limit of error is an expression of the degree of correspondence that can be expected between two results, one obtained by density measurement and the other by $Ce(SO_4)_2$ titration. It was further observed that some bias exists in the present calibration curve for the density method and that removal of the bias would correct the standard deviation to the more favorable figure of 0.8%.

An extensive study of the interrelationship between the density, temperature, and concentration of UO_2SO_4 solutions is nearing completion. It is desirable to know the magnitude of errors caused by temperature deviations during density determinations in order to establish temperature control limits and to make possible the use of a calibration curve established at one temperature with density observations obtained at a different temperature. The coefficient of change in concentration with respect to change in temperature was found to be -0.031 mg of uranium per °C for increasing temperature in the range of 20 to 30°C and for the uranium concentration range of 15 to 45 mg per milliliter.

The coefficient of change in density with respect to change in temperature, at constant uranium concentration, was found to be -0.0003 density units (g/ml) per degree centigrade for the same range of temperature and concentration as stated above. The full extent of the interdependence of these coefficients is still under consideration and will be included in a comprehensive report soon to appear.

The effect of the trace elements usually encountered in HRE solutions on density measurements was studied in order to ensure that small amounts of these contaminants do not adversely affect the accuracy of the density method. Since the coefficient of variation of density with respect to uranium concentration is of the order of 1.4×10^{-3} density units (g/ml) per 0.1 mg of uranium per ml (determined experimentally by density measurements on UO_2SO_4 solutions), the information in Table 43 indicates that a tolerance of a total of 500 μg of contaminants per ml is permissible. It thereby becomes further evident

[30] O. Menis, C. K. Talbott, and F. E. Jenkins, "Analysis of Uranyl Sulfate Solutions: Uranium(IV)," *op. cit.*, ORNL-1113, p. 73.

that the effect of any contaminating element on density measurements may be expected to vary directly in relation to its weight compared with that of uranium.

TABLE 43

Effects of Nickel and Chromium on the Density of Uranyl Sulfate Solutions

CONTAMINANT CONCENTRATION (μg/ml)		DENSITY ELEVATION x 10^3 (g/ml)
Ni	Cr	
500		1.2
200		0.4
100		0.2
	500	1.2
	200	0.6
	100	0.3

Determination of Uranium by Direct Titration with Chromous Solution (O. Menis and C. K. Talbott). In anticipation of a large-scale demand for determinations of uranium in concentrated (400 mg of uranium per ml) UO_2SO_4 and UO_2F_2 solutions, methods other than the Jones Reductor-$Ce(SO_4)_2$ titration method being used are under investigation. The method now in use on HRE solutions is believed to be unsuitable, since the reduction step is too lengthy when the uranium concentration is much greater than that now encountered (40 mg of uranium per ml). An additional disadvantage is the necessity of eliminating the fluoride ion when UO_2F_2 solutions are analyzed.

Use of a titrimeter with an electronic end-point indicator ("magic eye") for determination of uranium by direct titration with $CrSO_4$ was studied by Lafferty and Winget,[31] who reported an average relative error of ±0.3% on solutions containing 100 to 500 mg of uranium. The present investigation involves a study of the applicability of this method with a Precision-Dow Automatic Recording Titrimeter to HRE solutions. The chromous solutions are being prepared according to the directions of Lingane and Pecsok[32] and are stored under hydrogen in an automatic Machellet buret. Platinum and gold are being tested as indicator electrodes. The effects of acid concentration, nitrogen deaerating time, and speed of titration are being studied.

The experimental procedure is as follows: 2-ml samples are pipeted into 200-ml, tall-form, rubber-stoppered beakers; the volume is made to 100 ml with water and 10 ml of H_2SO_4 is added; the solution is heated to 80 ± 2°C; and the electrodes and buret tip are inserted through the rubber stopper into the solution. The sample is titrated with standard chromous solution while nitrogen is bubbling through the solution, which is being stirred with a magnetic stirrer.

A study of the relative merits of platinum and gold electrodes in the titration with the chromous ion proved the gold electrode to be superior. Results that were more reproducible were obtained with the gold electrode than with the platinum electrode. The platinum was undesirable because it was necessary to "flame" the electrode between titrations. Also with the platinum electrode, an additional break occurred in the titration curve before the equivalence

(31) H. Lafferty, Jr. and R. Winget, Jr., "The Determination of Uranyl Ion by Direct Titration with Chromous Sulfate," A-4018 (Apr. 1, 1946).

(32) J. J. Lingane and R. L. Pecsok, "Preparation of Standard Chromous Sulfate or Chromous Chloride Solutions of Determinate Concentration," *Anal. Chem.* **20**, 425 (1948).

point, and at the end point the slope was less favorable than with the gold electrode. The peculiarity in the titration curve associated with the use of the platinum indicator electrode is probably explained by the catalytic effect of this metal on the reduction of water by chromous ions.

A wide latitude exists in the acid concentration that can be tolerated, as indicated by almost identical results obtained in solutions that were 5, 10, and 20% in H_2SO_4.

Tests proved that it was necessary to remove oxygen from the solution before and during titration. This was achieved by bubbling nitrogen through the solution. Average factors of 4.22 ± 0.01, 4.27 ± 0.01, and 4.29 ± 0.03, respectively, were obtained for a series of quadruplicate determinations using the gold electrode and deaerating with nitrogen gas for 2, 4, and 6 minutes. These factors indicated that for the given volume of solution 4 min of bubbling is sufficient for removal of dissolved oxygen.

A series of HRE samples was analyzed for uranium by direct chromous titration and by the Jones Reductor-$Ce(SO_4)_2$ titration. The values are compared in Table 44. The data indicate close agreement between the two methods on samples 1 and 3. In the case of sample 2, however, there is divergence, and the comparison of the two methods will be further investigated. The precision of the results by chromous titration was excellent in all cases.

Determination of Trace Elements (O. Menis). It is necessary to determine the concentration of certain elements in microgram quantities in connection with studies of corrosion problems in the HRE project. Investigations have continued of methods of determining these traces both in uranyl solutions and in other materials. A discussion of these follows.

TABLE 44

Comparison of Results of the Direct Chromous and the Jones Reductor-Ceric Sulfate Titrations for the Determination of Uranium

SAMPLE	URANIUM (mg/ml)				
	DIRECT CHROMOUS TITRATION			JONES REDUCTOR-$CeSO_4$ TITRATION	DIFFERENCE
	X	$\bar{X}$	d	Y	$(\bar{X} - Y)$
1	22.15		+0.04		
	22.06	22.11	-0.05	22.1	0.0
2	41.48		-0.02		
	41.52	41.50	+0.02	42.3	-0.8
3	39.60		-0.09		
	39.66	39.69	-0.03	39.5	+0.2

Molybdenum (O. Menis). No work has been done on this problem since the last report.[33]

Tungsten (O. Menis). No work has been done on this problem since the last report.[34]

Hydrogen and Oxygen (O. Menis and F. E. Jenkins). In anticipation of an increase in the number of samples to be analyzed for oxygen and hydrogen, methods other than the volubaric procedures being used are under investigation. A bibliography of methods of gas analysis (oxygen, hydrogen, and dioxide) has been recently compiled by Sachs.[35] Some of these methods are being examined from the standpoint of economy, accuracy, sample size required, and applicability to automatic instrumentation.

Since the last quarterly progress report, samples containing 100 to 500 ppm of hydrogen and oxygen have been analyzed by means of a Fisher Gas Analyzer (Precision Universal Model)[36] that has been tested and adapted to these determinations. Synthetic mixtures of hydrogen and oxygen (15 cc of hydrogen and 36 cc of oxygen at room temperature and atmospheric pressure) were analyzed by means of this apparatus with a relative error of less than 1%.

Silicon Dioxide (O. Menis and C. K. Talbott). An investigation was made of a spectrophotometric procedure for the estimation of silicon dioxide based on the formation of the silicomolybdate complex, reduction of the molybdenum, and the extraction of the reduced molybdenum with *n*-butanol. The absorbancy of the extract is measured at 800 millimicrons.[37,38]

A standard solution was prepared from $NaSiO_3$ by the method described by Snell and Snell[39] in which a bicarbonate solution is used to convert colloidal SiO_2 into a soluble form. In using the method and apparatus described by Rodden,[37] difficulties were encountered in obtaining low and reproducible blank readings. The optical densities of these blanks were 0.270, 0.210, 0.342, 0.643, 0.910, 0.740, 0.793, and 0.865. The procedure was modified by carrying out the reaction and extraction in polyethylene beakers, and the blanks obtained on three successive days were found to have optical densities of (1) 0.083, 0.097; (2) 0.050, 0.061, 0.070; and (3) 0.162, 0.58, 0.174, 0.452, 0.510, respectively. The erratic blank results obtained on the third day could be attributed to an atmospheric contamination from a concrete drilling operation in the vicinity of the laboratory. Further study of the reproducibility of blank determinations and use of closed polyethylene bottles produced more consistent results, e.g., optical density values of 0.138, 0.143, and 0.155. Standard solutions containing from 3 to 9 μg of SiO_2 per ml of solution were analyzed in a similar manner. The results are shown in Table 45.

The data in Table 45 indicate a low order of precision. Because of the difficulties involved in obtaining

(33) Menis, Talbott, Jenkins, and Lee, *op. cit.*, p. 65.

(34) *Ibid.*

(35) F. L. Sachs, "Gas Analysis for Carbon Dioxide, Hydrogen and Oxygen," *Technical Information Center*, Y-B4-45 and Y-B4-46 (Oct. 23, 1951).

(36) M. P. Matuszak, *Fisher Gas-Analysis Manual*, 4th rev. ed., Fisher Scientific Co., Pittsburgh, Penna.

(37) C. J. Rodden (Editor-in-chief), *Analytical Chemistry of the Manhattan Project*, p. 221-223, McGraw-Hill, New York, 1950.

(38) W. H. Langham, P. B. Fisk, M. J. Rasmussen, P. L. Kirk, R. E. Kitson, H. Delaney, L. Tolmach, L. E. West, and J. I. Watters, "Microdetermination of Silica and Phosphorus by the Molybdenum Blue Method," AECD-3121 (Mar. 26, 1951).

(39) F. D. Snell and C. T. Snell, *Colorimetric Methods of Analyses*, I, 518-519, 3rd ed., Van Nostrand, New York (1948).

TABLE 45

Precision of Determination of Silicon Dioxide in Uranyl Sulfate Solution

Final volume of solution, 10 ml

SILICA (μg/ml)	OPTICAL DENSITY*	FACTOR**
3	0.065	46.1
3	0.090	33.3
3	0.053	56.6
6	0.126	47.6
6	0.193	31.1
9	0.256	35.2
	Average	41.7
Standard deviation of factor		4.1

*After a blank correction of 0.145.

**Concentration (μg/ml) per optical density.

reproducible results, which may be partially ascribed to the relatively high blank values, more development work is planned before a procedure is written for use in the laboratory. A modified procedure reported by Ferrari,[40] for which blank values are said to be very low, will be investigated.

Nitrogen (O. Menis and C. K. Talbott). Determinations were requested of total nitrogen in microgram quantities, predominantly as nitrate, in UO_2SO_4 solutions, in UO_3 slurries, and in acid washes from stainless steel apparatus. Early work involved attempts to adapt a reduction and micro-Kjeldahl procedure as described by Rodden.[41] In this method the digestion mixture was composed of H_2SO_4, Na_2SO_3, $Cr_2(SO_4)_3$, HgO, and Zn. The blank determination in four trials averaged 210 ± 10 μg of nitrogen. On a series of six standards ranging in concentration from 112 to 336 μg of nitrogen the average recovery was 45 ± 8%, and on the following day the recovery in an additional series was 64 ± 2%. An even lower recovery was obtained when 1120 μg of nitrogen was present, and an average of only 25 ± 6% was recovered in triplicate determinations. Doubling the quantity of chromous solution improved the recovery of the last series, but it was still only 49 ± 4%.

A direct method for nitrate, reported by Lingane and Pecsok,[42] was then adapted for the determination of total nitrogen in UO_2SO_4 solutions. In this method the nitrate is reduced with excess $CrSO_4$ solution at room temperature. The chromic and uranous ions are complexed with potassium tartrate, and total nitrogen is distilled by the usual micro-Kjeldahl procedure. The results obtained on standard solutions of nitrate prepared in UO_2SO_4 solution are presented in Table 46.

The best results are obtained with a ratio of at least two equivalents of chromous ion for each equivalent of uranyl ion. The reduction is carried out at room temperature for 2 to 5 minutes. At least a thirtyfold molar excess of potassium tartrate is required to keep the solution clear upon addition of NaOH in the Kjeldahl distillation procedure. (If the solutions become cloudy during distillation, the recovery of microgram quantities of nitrogen is low.) This procedure was also used for determining the nitrate content of 1% HNO_3 solutions after they had been used in the treatment of stainless steel pressure vessels.

(40) C. Ferrari, "Über die photometrische Mikrobestimmung der Kieselsäure," *Mikrochemie ver. Mikrochim. Acta*, **XXXVI/XXXVII Band**, 585 (1951).

(41) C. J. Rodden, *op. cit.*, p. 212.

(42) J. J. Lingane and R. L. Pecsok, "Volumetric Determination of Nitrate Ion by Reduction with Chromous Ion," *Anal. Chem.* **21**, 622 (1949).

TABLE 46

Determination of Nitrogen in Uranyl Sulfate Solution by Direct Chromous Reduction and Kjeldahl Distillation

Conditions: Total uranium, 74 mg
0.2 *M* $CrSO_4$ solution, 6 ml
3.6 *M* potassium tartrate, 15 ml
50% (W/V) NaOH, 0.5 ml
NO_3 added as HNO_3 and standardized by acid-base titration

TEST	NITROGEN (μg)		RECOVERY (%)
	PRESENT	FOUND	
Blank	0	7	
1	330	318	96.4
2	330	335	101.5
3	330	308	93.3
4	220	230	104.6
5	220	221	100.5
6	110	121	110.0
7	110	114	103.6

Solid samples of UO_3 were analyzed for total nitrogen in a similar manner. The oxide was dissolved in HF, and the fluoride was complexed with H_3BO_3. Although the reagent blanks in these determinations were relatively high, recoveries of 94 and 96% were obtained in two determinations on UO_3 samples to which standard additions of nitrogen were made.

Iodate (O. Menis and F. E. Jenkins). Samples of a solution from an HRE corrosion test loop that originally contained added iodine and iodide in microgram quantities failed to show any traces of these materials when analyzed by potentiometric methods as described in a previous report.[43] Because the iodine and iodide, under the conditions of the experiment, could have been oxidized to iodate, methods for the determination of iodate were investigated. An indirect method in which iodate is reduced to iodide and the iodide is determined argentometrically[43] offered a rapid and sensitive method for the determination. The reducing agents, $HAsO_2$, H_3PO_3, and hydrazine, and conditions under which they are most effective were investigated. It was found that the $HAsO_2$ reduction reaction requires the application of heat, whereas reduction with H_3PO_3 is rapid at room temperature. A large excess of H_3PO_3 or other complexing agent, however, is required to keep the uranium from precipitating. Since this requirement reduces the sensitivity of the method, this reagent was abandoned.

The reduction of the iodate ion with hydrazine in a UO_2SO_4 solution proved to be the most effective method. The reducing agent, hydrazine sulfate, was neutralized with NaOH in order to increase its solubility in the methanol titration medium. The factor obtained by this method indicates that as little as 2 μg of iodate (approximately 0.1 ppm), can be detected, although standard samples in that range have not been analyzed. Results are shown in Table 47.

Ruthenium (O. Menis and F. E. Jenkins). In connection with studies of the effects of fission products in HRE corrosion tests, the determination of ruthenium, which is one of these products, is desired.

A colorimetric procedure described by Rodden[44] for the determination of microgram quantities of ruthenium was tested. In this procedure ruthenium is distilled as the tetroxide

(43) Menis, Talbott, Jenkins, and Lee, *op. cit.*, p. 66.
(44) C. J. Rodden, *op. cit.*, p. 487.

TABLE 47

Precision of Determination of Iodate in Uranyl Sulfate Solution by Reduction with Hydrazine and Argentometric Titration of the Iodide

IODATE (μg)	CHART* UNITS	FACTOR (μg/chart unit)
20.0	3.7	5.27
50.0	9.2	5.56
50.0	10.5	4.77
50.0	10.5	4.77
100.0	19.0	5.27
100.0	20.2	4.95
100.0	20.3	4.93
100.0	20.0	5.00
	Average	5.07
Standard deviation of factor		0.25

*Precision-Dow Automatic Titrimeter. Volume of titrant is proportional to chart units.

from a strongly oxidizing medium, collected in a $HCl-SO_2$ solution, and determined colorimetrically with thiourea as the chromogenic agent. In tests of the method performed in this laboratory, however, the blue color developed with this reagent was unstable, and no reproducible absorbancy readings were obtained.

A different reagent, β-nitroso-α-naphthol, was investigated in a search for a more stable and sensitive method. The colored complex formed by the reaction between ruthenium and β-nitroso-α-naphthol has an absorption maximum at 540 mμ and the absorbancy relationship obeys Beer's Law. The method is sensitive to 1 μg of ruthenium (using 5-cm cells). The color developed is stable for at least 1 hour. The results obtained with standard dilution series of solutions are shown in Table 48, whereas those for a similar series of individual distillations of aliquots of a standard solution are shown in Table 49. The latter table indicates an average recovery of 95%.

TABLE 48

Determination of Ruthenium - Test of Beer's Law

Conditions: reagent volume, 1 ml of 0.5% β-nitroso-α-naphthol in ethanol; final volume, 50 ml; 5-cm cell; optical density measured at 540 mμ

RUTHENIUM (μg/ml)	OPTICAL DENSITY	FACTOR*	DEVIATION FROM AVERAGE
0.15	0.072	107	+3
0.31	0.141	105	+1
0.77	0.387	101	-3
1.54	0.815	106	+2
3.08	1.542	100	+4
	Average	104	
Standard deviation		3	

*Factor = ruthenium concentration (μg/ml) per optical density.

TABLE 49

Determination of Ruthenium - Test of Recovery on Distillation

RUTHENIUM (μg)		
ADDED	FOUND	RECOVERY (%)
7.7	7.33	95.0
23.1	20.8	89.5
38.5	37.8	98.0
77.0	75.9	98.5
385.0	370	95.5
770.0	728	94.5

The procedure used with the new reagent involves the collection of the RuO_4 distillate in a 25-ml volumetric flask containing 10 ml of 3 *N* HCl saturated with SO_2 and 1 ml of 0.5% β-nitroso-α-naphthol in C_2H_5OH. The distillation is carried out as described by Rodden.[44] At the end of the distillation the receiving flask is heated by immersion in boiling water for 1 min, cooled, filled to volume, and the absorbancy of the solution measured at 560 millimicrons. It is believed that the use of β-nitroso-α-naphthol as a chromogenic agent in the determination of ruthenium has not been reported in the literature.

Copper (O. Menis). In certain HRE experiments, copper is put into the UO_2SO_4 system, and therefore determinations of copper concentration, ranging from microgram quantities up to 1.5 mg/ml, are required. A spectrophotometric method using sodium diethyldithiocarbamate reagent was tried[45] for concentrations of 10 to 100 μg/ml of copper. For a series of four standards, ranging in concentration from 10 to 100 μg/ml, the factor [concentration (μg/ml) per optical density] obtained was 118 with a standard deviation of 3. In this method nickel is known to interfere, and the recommended procedure is to precipitate nickel with dimethylglyoxime and separate it by filtration. To test this method of avoiding interference by nickel, the recovery of 30 μg of copper from solutions containing 12, 24, and 48 μg of nickel was investigated. The respective recoveries of 97, 82, and 72%, indicate that when more than approximately 12 μg of nickel is present the method is not dependable. Other methods, such as extraction of the nickel dimethylglyoxime with chloroform, will be studied for sample solutions containing larger quantities of nickel. The common electrolytic method has been adopted[46,47] for solutions containing milligram quantities of copper.

Zirconium (O. Menis). A study of methods for the determination of zirconium in UO_2SO_4 solutions, described in a previous report,[48] has been continued. The present phase of this work involves the investigation of interferences in the chloranilic acid procedure and the development of methods for the elimination of these interferences.

An investigation of cations by spectrophotometric measurements (nickel, iron, chromium, manganese, and uranium) indicated that ferric, uranyl, and chromate ions interfere in the chloranilic acid procedure – iron because of the formation of a colored complex with chloranilic acid, and uranium and chromate because of high absorbancy in the wavelength region at which the zirconium-chloranilic acid complex is measured.

Since it is necessary to use nitrate or perchlorate as a salting-out agent in the extraction procedure adopted for the separation of uranium from zirconium, the interferences of these ions were studied. It was found that the presence of nitrate affects the stability of the complex and that the color fades rapidly after 15 min in solutions more acid than pH 1 and 2 to 4 *M* with respect to nitrate. Erratic results are obtained in less strongly acid solutions, probably because of a turbidity that occurs. The complex was found to be stable in

(45) *Ibid.*, p. 408-409.

(46) W. F. Hillebrand and G. E. F. Lundell, *Applied Inorganic Analysis*, p. 197-198, Wiley, New York, 1929.

(47) N. H. Furman, *Scott's Standard Methods of Chemical Analysis*, I, 361, Van Nostrand, New York, 1939.

(48) Menis, Talbott, Jenkins, and Lee, *op. cit.*, p. 65.

the presence of perchlorate at pH 0.1 to 0.2, but the stability decreases at higher pH values.

The absorbancy of the zirconium-chloranilic acid complex is less in the presence of the sulfate ion and the optical density decreased with increasing sulfate concentration. It is necessary however that sulfate be present in the extraction step, and thus rigid control of the concentration of this ion in both the standard solutions and HRE samples is required.

A TBP extraction is carried out to remove uranyl ions from the solutions and thereby eliminate or minimize the interference of the ion. Excess H_2SO_4 is added to the solution before extraction to prevent zirconium from entering the organic phase.[49] Under these conditions all but a trace of the uranium is removed in the presence of $NaClO_4$ as the salting-out agent, and 93% recovery of zirconium in the aqueous layer is achieved. A series of results are shown in Table 50.

Chromium (O. Menis and C. K. Talbott). The colorimetric determination of chromium with diphenylcarbazide after oxidation of the chromium with $HClO_4$ has been previously described.[50] The poor precision, which has been traced largely to the critical boiling time in the oxidation step, has necessitated further studies of procedures for the determination of chromium in solutions containing 40 to 400 mg of uranium per milliliter.

A restudy was made of the method using permanganate as the oxidizing agent and reducing the excess permanganate with HCl. Rigid control of the boiling time was also found to be necessary in this oxidation procedure. The results obtained on uranyl solutions containing known quantities of chromium (1.7 to 83.7 μg/ml) indicated that the recovery of chromium varied from 90 to 110%. A study is being made of polarographic and amperometric methods for the determination of chromium because a method requiring easily reproducible conditions is needed.

TABLE 50

Zirconium by the Chloranilic Acid Method After Extraction of Uranium with TBP

TEST	ZIRCONIUM (μg) PRESENT	ZIRCONIUM (μg) FOUND	ZIRCONIUM RECOVERY (%)
1	5.0	4.7	94
2	10.0	9.3	93
3	15.0	14.1	94
4	20.0	18.7	93

Nickel (O. Menis). A study of the colorimetric determination of nickel has been continued to test the applicability of a previously described procedure[51] to solutions of high (400 mg/ml) uranium concentration. Only two modifications were necessary to adapt the procedure to the analysis of these solutions. The essential changes were (1) a relative reduction of the quantity of excess ammonia added (a large excess results in the precipitation of uranium) and (2) the use of a reference solution in which the uranium concentration is equivalent to that of the samples.

Table 51 shows the effect of the variation of uranium concentration on the colorimetric determination of nickel in solutions containing from 5 to 25 μg of nickel in the final

(49) C. Feldman, private communication, October 1951.

(50) Menis, Talbott, and Jenkins, *op. cit.*, ORNL-1113, p. 76.

(51) *Ibid.*, p. 77.

TABLE 51

Effect of Variation of Uranium Concentration in the Blank on The Colorimetric Determination of Nickel by Dimethylglyoxime

Sample volume, 25 ml
Uranium in sample, 389 mg (A)
Nickel in sample, 48 to 24.2 μg

URANIUM (mg)		
REAGENT BLANK (B)	DIFFERENCE (A-B)	FACTOR*
389	0	49.6
350	39	48.5
272	117	47.8
0	389	44.0

*Factor = nickel concentration (μg/25 ml) per optical density.

volume. These data indicate that the effect of uranium concentration on the determination of nickel with dimethylglyoxime is appreciable and that this factor must be controlled in the reagent blank.

A study of the stability of the nickel dimethylglyoxime complex indicates that the color intensity increases rapidly during the first hour but is stable during the second hour. It is recommended therefore that the solution be allowed to stand 1 hr before its optical density is measured.

DETERMINATION OF SULFIDE IN HEAVY WATER

O. Menis

A method is needed for the detection and determination of traces of sulfide in heavy water in connection with studies of the corrosive properties. A polarographic method involving the measurement of the anodic wave of the sulfide ion has been investigated.[52,53] Experiments were carried out with an ORNL high-sensitivity recording polarograph, Model Q-1160. Nitrogen that had been passed through commercial "oxorbent" and alkali sulfite scrubbers to remove oxygen was used to sweep oxygen from the solutions and to keep the polarographic cell under an inert atmosphere.

TABLE 52

Polarographic Determination of Sulfide

Conditions: Drop time, 6 sec
Temperature, 27°C
Instrument sensitivity, 0.1 μa for full-scale deflection

SAMPLE	SULFIDE ADDED (μg)	DIFFUSION CURRENT (μg x 10^3)	FACTOR (μg/μa)
H_2O	0.32	7.48	42.8
	0.64	9.84	65.0
		Average	54
D_2O	0.32	5.51	58.0
	0.64	13.78	46.4
		Average	52

Polarograms for both ordinary and heavy water were recorded before and after standard additions of sulfide. Polarograms of the solutions to which sulfide had been added were characterized by distinct breaks with a half-wave potential of −0.73 v vs. S.C.E. Results of the preliminary experiments are shown in Table 52.

(52) I. M. Kolthoff and J. J. Lingane, *Polarography*, p. 209, 323, 326, Interscience, New York (1941).

(53) I. M. Kolthoff and C. S. Miller, "Anodic Waves Involving Electro-oxidation of Mercury at the Dropping-Mercury Electrode," *J. Am. Chem. Soc.* 63, 1405 (1941).

These data indicate that as little as 0.1 μg of sulfide can be determined by this method. Further studies will include tests of a rotating, silver microelectrode as a means of increasing the sensitivity of the method.

QUALITY CONTROL

R. L. McCutchen

The control programs for the general ionic analysis laboratory, the HRE control laboratory, and the X-10 analytical laboratories were essentially the same as those reported for the third quarter.

In Tables 53, 54, 55, and 56, in which the control results are summarized, precision is expressed as the limit of error (L.E., per cent) of one analysis at a 95% probability level, and the accuracy is given in terms of the bias (B ± C. I., in per cent). In all cases, average values applicable to the concentration ranges encountered in the control program are reported. The average standard deviation is also included in the tables.

General Ionic Analysis Laboratory

Uranium - Fluorometric. A limit of error of 20% is the generally accepted criterion of satisfactory fluorometric test results; therefore the precision obtained for series "FE" (extracted with TBP and then processed in the usual way) test results are excellent, and the accuracy is satisfactory (see Table 54).

Uranium - Colorimetric. The colorimetric values reported during this quarter indicate that the *l*-ascorbic acid method is not yielding test results of the desired precision and accuracy. It has been suggested that the thiocyanate method be substituted for the *l*-ascorbic acid method. Table 53 shows a comparison of the accuracy and precision of both methods for uranium in the range of 0.2 to 0.7 mg/ml (see Tables 54 and 56).

TABLE 53

Comparison of Uranium Test Results Obtained by Two Colorimetric Methods

METHOD	PRECISION L.E.* (%)	ACCURACY B ± C.I* (%)
l-ascorbic acid	12	- 4 ± 6
Thiocyanate	2	- 0.1 ± 0.3

*95% probability level.

Vanadium - Hydrogen Peroxide Method. The vanadium test results are satisfactory with a limit of error of 6% and no indications of a bias (see Table 54).

Bartow Clay Leach Solutions - Uranium, Fluorometric Method. Lower uranium values and poor precision for Bartow clay leach solutions, processed without extracting the uranium with TBP before processing by the fluorometric method, appear the result of something in the leach solution that causes quenching. Although the precision of solutions extracted and processed by the usual fluorometric procedure is not so good as that observed for the $UO_2(NO_3)_2$ solutions, a limit of error of approximately 25% is considered satisfactory for this type of material (see Table 54).

HRP Control Laboratory

Uranium - Jones Reductor-Ceric Sulfate Method. Neither the accuracy nor the precision of the uranium test results is considered satisfactory

TABLE 54

General Ionic Analysis Laboratory Control Program
Fourth Quarter – 1951

MATERIAL	CONSTITUENT DETERMINED	METHOD[a]	NO. OF RESULTS	CONCENTRATION RANGE	STANDARD DEVIATION (%)	PRECISION L.E.[b] (%)	ACCURACY B ± C.I.[b] (%)	BIAS
Uranyl nitrate solution	Uranium	FD	52	1.7. to 17.0 μg/ml	13	26	- 4 ± 8	None
		FE	43	1.7 to 17.0 μg/ml	9	13	+ 1 ± 6	None
Uranyl nitrate solution	Uranium	CD	37[c]	0.17 to 1.7 mg/ml	4	9	- 4 ± 3	Negative
		CE	52[c]	0.17 to 1.7 mg/ml	8	12	- 4 ± 6	None
Vanadium solution	Vanadium	H_2O_2	27[c]	0.28 to 1.38 mg/ml	2.9	6	- 1 ± 2	None
Bartow clay leach (H_2SO_4)	Uranium	FD	18	26 μg/ml	14.0	30	True value not known	
		FE	30	51 μg/ml	11.8	23	True value not known	
Bartow clay leach (HNO_3)	Uranium	FD	32	30 μg/ml	19.7	41	True value not known	
		FE	22	46 μg/ml	12.4	25	True value not known	

[a] Method: FD = Without extraction – fluorometric method
FE = TBP extracted prior to plating – fluorometric method
CD = Direct color development – *l*-ascorbic acid method
CE = Ether extraction before color development – *l*-ascorbic acid method

[b] 95% probability level.

[c] One result = average of two determinations.

TABLE 55

HRP Analytical Control Program
Fourth Quarter - 1951

MATERIAL	CONSTITUENT DETERMINED	METHOD	NO. OF RESULTS	CONCENTRATION RANGE	STANDARD DEVIATION (%)	PRECISION L.E.* (%)	ACCURACY B ± C.I.* (%)	BIAS
Uranyl sulfate solution	Uranium	Jones Reductor-ceric sulfate	196	26 to 58 mg/ml	1.0	2.0	+ 0.3 ± 0.4	None
	Iron	α-α'-bipyridyl	79	4 to 16 μg/ml	10	20	+ 9 ± 2	Positive
	Nickel	Dimethylglyoxime	86	5 to 58 μg/ml	11	21	+ 13 ± 2	Positive
	Chromium	$KMnO_4$-diphenyl-carbazide	97	5 to 84 μg/ml	20	40	- 9 ± 2	Negative
	Chromium	Bismuthate-diphenyl-carbazide	20	5 to 84 μg/ml	3.7	8	- 9 ± 2	Negative
	Manganese	Periodate	18	3 to 30 μg/ml	26	56	- 11 ± 13	None

*95% probability level.

TABLE 56

Uranium Analytical Control Program (X-10 Laboratories)
Fourth Quarter - 1951

MATERIAL	METHOD	BUILDING	NUMBER OF DUPLICATES	CONCENTRATION RANGE	STANDARD DEVIATION (%)	PRECISION L.E.* (%)	ACCURACY B ± C.I.* (%)	BIAS
Uranyl nitrate solution	Fluorometric	3550	110	3.4 to 7.0 μg/ml	3.8	9	- 1.5 ± 1.9	None
		3019	194	3.4 to 70 μg/ml	4.5	9	+ 0.5 ± 1.1	None
	Colorimetric (thiocyanate)	3550	110	341 to 682 μg/ml	0.7	1.3	- 0.5 ± 0.3	Negative
			62	253 to 273 mg/ml	0.7	1.2	0 ± 0.2	None
		3019	171	341 to 682 μg/ml	1.3	2.6	+ 0.3 ± 0.4	None
			112	253 to 273 mg/ml	1.2	2.0	- 0.2 ± 0.3	None

*95% probability level.

since a limit of error of 1% should be both practical and realistic, whereas a limit of error of 2% is actually being obtained. Since most of the analyses were carried out by the same two operators working together it is possible that some variable not apparent at this time is responsible for this poor precision (see Table 55).

Iron and Nickel - Colorimetric Methods. The precision of the iron and nickel test results are satisfactory, although a definite positive bias is noted for both determinations. Corrective measures are being taken to eliminate this bias (see Table 55).

Chromium - Diphenylcarbazide Method. The accuracy and precision of the chromium test results during the first two months of this period were very poor. The precision was improved by a factor of 5 when $NaBiO_3$ was substituted for the $KMnO_4$-HCl (oxidation and decolorization steps) in the original procedure. A negative bias that still exists is believed to be caused by manganese in the solutions. A study is being made to determine the effect of manganese on the diphenylcarbazide method for determining chromium (see Table 55).

Manganese - Periodate Method. The manganese test results have given poor precision and accuracy. Because of the known sensitivity of periodate to small amounts of manganese, such as are found in the UO_2SO_4 solutions, it appears that techniques rather than the method need careful study (see Table 55).

X-10 Laboratories

The precision and accuracy of the uranium values reported by the laboratories in Buildings 3550 and 3019 using the fluorometric and thiocyanate (colorimetric) methods are excellent. As noted in previous periods, the precision of test results reported from the laboratory in Building 3550 is slightly better than that obtained for laboratory in Building 3019 test results (see Table 56).

All uranium values determined by means of the fluorometric method in laboratory in Building 3550 were obtained by one operator, whereas those reported by laboratory in Building 3019 were determined by a number of operators. Therefore the number of operators processing the samples apparently has very little effect on the precision or accuracy of the test results (see Table 56).

TABLE 57

Summary of Analytical Service Work at Y-12 Site for Period September 10 Through December 3, 1951

	NO. OF PERSONNEL		ORNL DIVISIONS REQUESTING ANALYSES					OTHERS REQUESTING ANALYSES		
	TECHNICAL	NONTECHNICAL	ANP	ELECTROMAGNETIC	ISOTOPE RESEARCH AND PRODUCTION	MATERIALS CHEMISTRY	REED	GENERAL ELECTRIC	Y-12	TOTAL DETERMINATIONS
GROUP MAKING ANALYSES			NUMBER OF DETERMINATIONS							
HRP Analytical	1	8					10,820			10,820
ANP Analytical	2	5	490		20	2,382		5	79	2,976
Raw Materials	2	5		122	90	3,111				3,323
Metals and Alloys	3	1	17	2	20	1,273	275		39	1,626
Miscellaneous Materials	4	2			9	2,139	349	44	191	2,732
TOTAL	12	21	507	124	139	8,905	11,444	49	309	21,477

SERVICE ANALYSES

H. P. House

ANALYTICAL SERVICES FOR ANP

L. J. Brady and J. W. Robinson

Experimental Engineering. The major portion of the samples submitted for analysis have been fused ANP fluoride fuel eutectics. Some of the methods for the analysis of the eutectics for metallic impurities (corrosion products, mainly), total alkali, total fluoride, and uranium are being tested, and others are now in use.

Responsibility for the determination of oxygen in helium has been transferred from the Research and Development Group to the Analytical Service Group.

Reactor Fuels. In addition to a large number of NaF-KF-UF_4 reactor fuel mixtures high in uranium content, which were analyzed by methods noted in a previous report,[1] reactor fuels containing NaF, KF, LiF, and UF_4, in which the uranium content is low (5 to 10%) are now being received. Revisions in the methods for removing the samples from the containers and for carrying out analyses were necessary. The samples with high potassium content have given particular difficulty because of the limited solubility of $KClO_4$. Dissolution has been effected by removal of $HClO_4$ by fuming after the addition of H_2SO_4.

New calibration curves for the colorimetric determination of iron and nickel have been constructed for the low-uranium materials, and modifications of methods for the determination of chromium, manganese, and molybdenum in the low-uranium fluoride salt mixtures are being studied by the Research and Development Group.

The pyrohydrolytic method for the removal of fluoride from low-uranium eutectic fluoride mixtures requires 2 to 3 hr as compared with 30 min for high-uranium mixtures. It is indicated that the fluoride determination for a large number of low-uranium samples will require considerable time unless some more expedient method can be found for the removal of the fluoride.

After removal of uranium by precipitation and ammonium salts by volatilization, total alkalis will be determined gravimetrically as sulfates.

Alkali Hydroxides. Corrosion test samples of alkali hydroxide coolants are being analyzed for metallic components. Relatively large amounts of one or more metals (iron, nickel, chromium, magnesium, aluminum) were added to the alkali hydroxides before corrosion tests were made, and thus the samples are often resistant to dissolution and modifications of the standard analytical methods are required.

In a number of cases, alkali hydroxide samples collected in quartz tubes severely attacked the quartz and thus made it necessary to decompose the silicates and volatilize the SiO_2 before proceeding with analyses for the metallic impurities.

A method based on that outlined by Hays[2] was used for the approximate

(1) J. C. White, W. J. Ross, and L. J. Brady, "Metallic Corrosion Products in Reactor Fuels," *Analytical Chemistry Division Quarterly Progress Report for Period Ending June 26, 1951*, ORNL-1113, p. 69.

(2) S. A. Hays, "The Acidimetric Determination of Aluminum with Fluoride at pH 10-11," HW-18178 (June 27, 1950).

determination of the relative amounts of NaOH and aluminate in NaOH that had been in contact with molten aluminum and with type-316 stainless steel. Since a vigorous reaction occurred at the time of dissolution of this material in water, which undoubtedly changed the composition, it is improbable that the test results accurately reflect the composition of the melt.

A considerable number of alkali and alkaline earth hydroxides derived from the work on preparations of pure hydroxides have been tested for purity by acidimetric titration; the carbonate content also was determined by volumetric microtitration.

The limit of detection of barium in $Sr(OH)_2$ by precipitation of the barium as $BaCrO_4$ in CH_3COOH solution was found to be of the order of 40 ppm.

ANALYTICAL SERVICES FOR HRP

A. F. Roemer, Jr.

The analysis of UO_2SO_4 solutions for total uranium, uranium(IV), and for corrosion products continues to comprise the major effort of this laboratory. A number of the current UO_2SO_4 samples contain copper, which is removed and determined by electrolytic deposition. The electrolyte, free of copper, is then available for other analyses with which copper would interfere.

A micro-Kjeldahl method was adapted to the determination of small amounts of nitrate in UO_2SO_4 samples, and thus made it possible to complete the analysis of a considerable number of samples, the reporting of which had been withheld for this determination.

Gases expelled from UO_2SO_4 solutions are now analyzed for hydrogen as well as for oxygen and CO_2. The demand for this type of analysis has increased sharply.

The number of samples has increased during this quarter and still further increases are anticipated because of the operation of the mockup reactor and an increase in the number of test loops.

During the major portion of this quarter nine persons were employed in this laboratory. A total of 1958 samples was received and 1935 samples (requiring 10,024 determinations) were reported, which leaves a backlog of 503 samples as compared with 480 at the end of the preceding quarter.

ANALYSIS OF ORE AND RELATED MATERIALS

J. W. Robinson

No important change has been made in the methods of analysis of ores, residues, and leach solutions. Most of the samples are derived from Bartow clay and Marysvale ore. As a result of investigations into the feasibility of using organic extractants to remove uranium from these materials, a large number of the samples have required the determination of uranium, iron, aluminum, and phosphate in organic phases. Decomposition of the organic material either by ignition or by the $HClO_4$-HNO_3 treatment is necessary prior to analysis.

In connection with fundamental chemistry studies, precise analyses have been made on laboratory preparations of $UO_2HPO_4 \cdot xH_2O$, the uranium being determined by the Jones Reductor-ceric sulfate titration procedure. Both the colorimetric method (employing the phospho-vanado-molybdate complex) and the molybdate-magnesia gravimetric method yield good results for phosphate. Water is determined by

[redacted]

volatilization and absorption in Dehydrite. Also in conjunction with these studies, solutions of UO_2HPO_4 containing $HClO_4$ have been analyzed for the perchlorate ion. Nitron was found to be an excellent precipitating agent for perchlorate in these solutions.

MISCELLANEOUS ANALYSES

J. W. Robinson

Approximately 10% of the work load for the laboratory consists of analyses of miscellaenous materials that are related to numerous projects throughout the area. Interesting examples of such analyses are discussed below.

The determinations of boron in Boral (aluminum-clad B_4C) were made by two methods that varied somewhat in the preliminary treatment. In both methods the B_4C was fused with Na_2CO_3 and the melt dissolved in water. For one variation the boron was separated from the solution by distillation as $(CH_3)_3BO_3$ prior to titration. In the second variation the titration was made directly on the solution. Equally reliable results were obtained with both procedures.

It was found that solution of refractory BeO is rapidly effected with 48% HF. The use of HF for dissolution of the oxide greatly reduces the time required for analysis. In order to apply the *o*-phenanthroline colorimetric method for iron, however, it is necessary to fume the solution with H_2SO_4 and H_3BO_3 to rid the sample of fluoride. If the H_3BO_3 were omitted, the results for iron would be 5 to 10% low, apparently because of the interference of residual fluoride.

The determination of microquantities of thorium in rock has been successfully performed by a modification of the colorimetric method in which Thoron is used as the chromogenic reagent.[3] Procedures in which Ferron[4] and parasonic[5] acid were used as precipitants failed to yield satisfactory results.

Pyridine solutions containing LiI, I_2, and pyridine·HI were analyzed for iodine combined as LiI, elemental iodine, and iodide combined with pyridine. The sample was diluted with water, rendered acidic, extracted with chloroform, backwashed with water, and the aqueous wash phase extracted with chloroform. The pyridine·HI and I_2 (chloroform phase) were determined volumetrically; the iodide as LiI (aqueous phase) was also titrated.

Complete analyses were made of gases containing CO_2, CO, O_2, hydrocarbons, and oxides of nitrogen.

---

(3) P. F. Thomason, M. A. Perry, and W. M. Byerly, "Determination of Microgram Amounts of Thorium: A Colorimetric Method," *Anal. Chem.* **21**, 1239 (1949).

(4) D. E. Ryan, W. J. McDonnell, and F. E. Beamish, "Determination of Thorium and Its Separation from Uranium by Ferron," *Anal. Chem.* **19**, 416 (1947).

(5) W. Byerly, L. Niedrach, W. Davin, and H. Dyas, "Preliminary Report on a Colorimetric Method for the Determination of Microgram Quantities of Thorium," CC-2670 (Jan. 1, 1945).

[redacted]