[redacted]

CENTRAL RESEARCH LIBRARY
DOCUMENT COLLECTION

AEC RESEARCH AND DEVELOPMENT REPORT

ORNL-1425
Chemistry-Separation Processes
for Plutonium and Uranium 5a

MARTIN MARIETTA ENERGY SYSTEMS LIBRARIES
3 4456 0360623 9

SEPARATION OF U^{233} IN THE ORNL PILOT PLANT

Classification Cancelled
Or Changed To
By Authority Of AEC 9.13.71
By E. Gelberg Date 11.10.71

CENTRAL RESEARCH LIBRARY
DOCUMENT COLLECTION
LIBRARY LOAN COPY
DO NOT TRANSFER TO ANOTHER PERSON
If you wish someone else to see this document, send in name with document and the library will arrange a loan.

OAK RIDGE NATIONAL LABORATORY
OPERATED BY
CARBIDE AND CARBON CHEMICALS COMPANY
A DIVISION OF UNION CARBIDE AND CARBON CORPORATION

UCC

POST OFFICE BOX P
OAK RIDGE, TENNESSEE

[redacted]

[redacted]

Report Number ORNL-1425

"This document consists of 36 pages.
No. 5 of 131 copies, Series A"

Contract No. W-7405, Eng 26

CHEMICAL TECHNOLOGY DIVISION

Pilot Plant Section

SEPARATION OF U^{233} IN THE ORNL PILOT PLANT

C. D. Hylton

Experimental Work By:

C. H. Cowan
C. D. Hylton
S. Mann
M. A. Turner
J. W. Ullmann
R. H. Vaughan
H. P. Wood

DATE ISSUED: DEC 11 1952

OAK RIDGE NATIONAL LABORATORY
Operated by
CARBIDE AND CARBON CHEMICALS COMPANY
A Division of Union Carbide and Carbon Corporation
Post Office Box P
Oak Ridge, Tennessee

[redacted]

MARTIN MARIETTA ENERGY SYSTEMS LIBRARIES

3 4456 0360623 9

[redacted]

INTERNAL DISTRIBUTION

1. G. T. Felbeck (C&CC)
2. Biology Library
3. Health Physics Library
4. Metallurgy Library
5-6. Training School Library
7. Reactor Experimental Engineering Library
8-13. Central Files
14. C. E. Center
15. C. E. Larson
16. W. B. Humes (K-25)
17. L. B. Emlet (Y-12)
18. A. M. Weinberg
19. E. H. Taylor
20. E. D. Shipley
21-22. F. L. Steahly
23. F. C. VonderLage
24. R. C. Briant
25. J. A. Swartout
26. S. I. Lind
27. A. H. Snell
28. A. Hollaender
29. M. T. Kelley
30. K. Z. Morgan
31. J. S. Felton
32. A. S. Householder
33. A. S. Harrill
34. C. E. Winters
35. D. W. Cardwell
36. E. M. King
37. W. K. Eister
38. F. R. Bruce
39. F. L. Culler
40. J. O. Davis
41. H. K. Jackson
42. D. D. Cowen
43. P. M. Reyling
44. W. B. Lanham
45. A. C. Jealous
46. W. E. Unger
47. C. D. Hylton
48. A. T. Gresky

EXTERNAL DISTRIBUTION

49-56. Argonne National Laboratory
57. Armed Forces Special Weapons Project, Sandia
58. Armed Forces Special Weapons Project, Washington
59-61. Atomic Energy Commission, Washington
62-64. Brookhaven National Laboratory
65-66. California Research and Development Company
67. Carbide and Carbon Chemicals Company (C-31 Plant)
68-69. Carbide and Carbon Chemicals Company (K-25 Plant)
70-71. Carbide and Carbon Chemicals Company (Y-12 Plant)
72. Chicago Patent Group
73. Dow Chemical Company (Rocky Flats)
74-79. duPont Company
80-83. General Electric Company, Richland
84. Hanford Operations Office
85-88. Idaho Operations Office
89. Iowa State College
90-93. Knolls Atomic Power Laboratory
94-95. Los Alamos Scientific Laboratory
96. Massachusetts Institute of Technology (Kaufmann for Benedict)
97-99. Mound Laboratory
100. Naval Research Laboratory
101-104. New York Operations Office
105-106. North American Aviation, Inc.
107. Patent Branch, Washington
108. San Francisco Operations Office
109. Savannah River Operations Office, Augusta
110. Savannah River Operations Office, Wilmington
111-114. University of California Radiation Laboratory
115-116. Vitro Corporation of America
117-131. Technical Information Service, Oak Ridge

[redacted]

[redacted]

[redacted]

TABLE OF CONTENTS

	Page Numbers
0.0 ABSTRACT	7
1.0 INTRODUCTION	8
2.0 SUMMARY	9
3.0 PROCESS DESCRIPTION	10
3.1 Summary	10
3.2 Chemical Flowsheet	10
3.3 Process Requirements	12
3.4 Feed Preparation	12
3.4.1 Slug History	12
3.4.2 Slug Charging	12
3.4.3 Jacket Removal	13
3.4.4 Dissolving	13
3.4.5 Feed Adjustment	13
3.5 Solvent Extraction	14
3.6 Product Isolation	14
3.6.1 Silica Gel Column	14
3.6.2 Protactinium-Thorium Absorption Column	15
3.7 Solvent Recovery	16
4.0 PROCESS RESULTS	17
4.1 Feed Preparation	17
4.2 Solvent Extraction and Ion Exchange	17
4.2.1 Decontamination	17
4.2.2 Material Balance, Thorium	18
4.2.3 Material Balance, U-233	18

[redacted]

Page Numbers

5.0 PROCESS EQUIPMENT 20

5.1 Building and Area Layout 20

5.2 Materials of Construction 20

5.2.1 Tanks and Tank Supports 20

5.2.2 Tubing and Pipe 24

5.2.3 Columns and Accessories 24

5.2.4 Miscellaneous 24

5.3 Reagent Makeup 24

5.3.1 Nitric Acid 24

5.3.2 Caustic 25

5.3.3 Scrub Solution 25

5.3.4 Solvent 25

5.3.5 Strip 25

5.3.6 B Column Pulse Purge 25

5.4 Feed Preparation Equipment 26

5.4.1 Slug Dissolving Equipment 26

a. Slug Charger and Chute 26

b. Dissolver 26

c. Condenser A-14 26

d. Off-Gas Scrubber 27

e. Off-Gas Filter Equipment 27

5.4.2 Makeup Tank, A-7 27

5.5 Solvent Extraction and Stripping Equipment 27

5.5.1 Hot Feed System 27

5.5.2 Extraction Column, A 28

a. Column Pulsing 28

b. Column Interface Control 28

[redacted]

Page Numbers

5.5.3 Stripping Column, B 29

5.6 Product Isolation 29

5.6.1 Silica Gel Column 30

5.6.2 Protactinium-Thorium Absorption Column 30

5.6.3 Product Exchange Columns 30

5.6.4 Effluent Catch Tank (B-10) 31

5.7 Solvent Recovery 31

5.7.1 Holdup Vessels 31

5.7.2 Treatment Vessel 31

5.7.3 Storage Vessels 31

5.8 Waste Handling 33

5.8.1 Thorium Waste 33

5.8.2 Chemical Wastes 33

5.8.3 Cold Wastes 33

5.9 Sampling 33

6.0 BIBLIOGRAPHY 34

7.0 APPENDIX 35

FIGURES

3.2 Interim 23 Process Chemical Flowsheet 11

5.0 Interim 23 Equipment Flowsheet 22

5.1 Schematic Plan of Building 3503 23

5.7 Solvent Treatment System 32

[redacted]

[redacted]

Page Numbers

TABLES

1. Data Summary, First Phase 35

2. Data Summary, Second Phase 36

[redacted]

[redacted]

0.0 ABSTRACT

This report summarizes the results of the short-term operation of the U-233 pilot plant at Oak Ridge National Laboratory.

[redacted]

[redacted]

1.0 INTRODUCTION

In the fall of 1951, Oak Ridge National Laboratory was requested to separate 2000 to 2500 g of U-233 from approximately 3600 kg of Hanford irradiated thorium. The solvent extraction process that was used consists of the following steps: dissolution of irradiated thorium in nitric acid, continuous solvent extraction of U-233 in a pulse column with tributyl phosphate (TBP) dissolved in kerosene, scrubbing the solvent containing the product with aluminum nitrate solution, stripping the product with dilute nitric acid in a second column, and absorbing the U-233 on a resin bed.

An existing plant in Building 3503, the former 706-HB 23 Pilot Plant, was used after considerable remodeling. The thorium dissolving, feed preparation, and solvent recovery facilities were essentially unchanged. The solvent extraction facilities are new, pulse columns replacing packed columns and ion exchange replacing evaporation and diisopropyl ether extraction. This plant, designed for material which was low in protactinium content, has 2-ft-thick concrete walls for shielding. An additional 4 in. of lead shielding was required on feed preparation and waste vessels because of the comparatively high protactinium content of the short-cooled slugs supplied for processing.

This report summarizes the three months of hot operations required to separate the desired amount of U-233.

The planning, experimental work, equipment installation, and operation of the plant was a combined effort of the Design, Unit Operations, Chemical Development, and Pilot Plant Sections of the Chemical Technology Division.

[redacted]

[redacted]

2.0 SUMMARY

Initial equipment operations and testing of the remodeled 23 Pilot Plant for the Interim-23 process began in March, 1952. Nine cold runs were made during March and April, 55 hot runs from April 8 to May 27, and 32 hot runs from August 25 to September 21, 1952. In the first phase 1417 g of U-233 was separated from 2343 kg of Hanford irradiated thorium, and in the second phase 1253 g was separated from 1355 kg of thorium; the total U-233 produced was 2670 g. In each phase, the U-233 was 98 per cent isotopically pure. The solvent extraction process gave decontamination factors of 5×10^5 for gross beta and gross gamma activities, and 2.4×10^5 for thorium. The ion exchange step gave an additional decontamination factor of 20. The total one-cycle U-233 loss was 0.29 per cent for the first series of hot runs and 0.70 per cent for the second series. The estimated loss of U-233 due to incomplete decay of protactinium was 11 per cent.

There were no serious mechanical or processing difficulties. With the exception of one occasion when slugs jammed in the chute and cleanup of a hot spill was necessary, the plant was operated continuously at a processing rate of 75 kg of thorium per day.

Th

2670 g

[redacted]

[redacted]

3.0 PROCESS DESCRIPTION

3.1 Summary

The chemical separation of U-233 from thorium, protactinium, and fission products was made in one cycle of solvent extraction combined with an ion exchange separation. In the presence of 200 per cent metal heel, the slugs with aluminum jackets were dissolved in 65 per cent nitric acid containing mercuric nitrate and sodium fluoride to catalyze the aluminum and thorium dissolving, respectively. The dissolver solution was fed to the extraction column as 1.5 M thorium and 0.5 to 1.0 M HNO_3, where the U-233 was extracted with 1.5 per cent tributyl phosphate in Amsco and scrubbed with 1.0 M $Al(NO_3)_3$. In the second column the U-233 was stripped from the organic phase with 0.05 M HNO_3. The strip solution containing U-233 was then passed through a Dowex-50 resin column where the U-233 was absorbed. When the resin column contained about 320 g of U-233, it was transported to the Isolation Laboratory where the U-233 was eluted with 2.0 M ammonium acetate-0.4 M acetic acid at a pH of 5.85. From this solution the uranium was precipitated as the peroxide. The peroxide was dissolved in nitric acid, and the product was shipped as the nitrate solution.

3.2 Chemical Flowsheet

Uranium-233 is produced by the irradiation of Th-232 with thermal neutrons as follows:

$$_{90}Th^{232} \quad (n,\gamma) \quad _{90}Th^{233} \xrightarrow[23\ min]{\beta} \ _{91}Pa^{233} \xrightarrow[27.4\ days]{\beta} \ _{92}U^{233}$$

For this series of runs, the material was allowed to cool for only 60 to 90 days and 11 per cent of the potential U-233 was lost owing to incomplete decay of protactinium.

The flowsheet (see Fig. 3.2) has the following features:

(a) A simple, rapid slug dissolution and feed preparation.

(b) Preferential extraction and decontamination of U-233 from thorium, protactinium, and fission products by use of an acidic-thorium-aluminum feed with wide specification limits, a dilute TBP extractant, a neutral aluminum nitrate scrub solution, and a system operable in a pulse column contactor.

(c) Efficient product stripping and concentration by a dilute nitric acid strip solution.

[redacted]

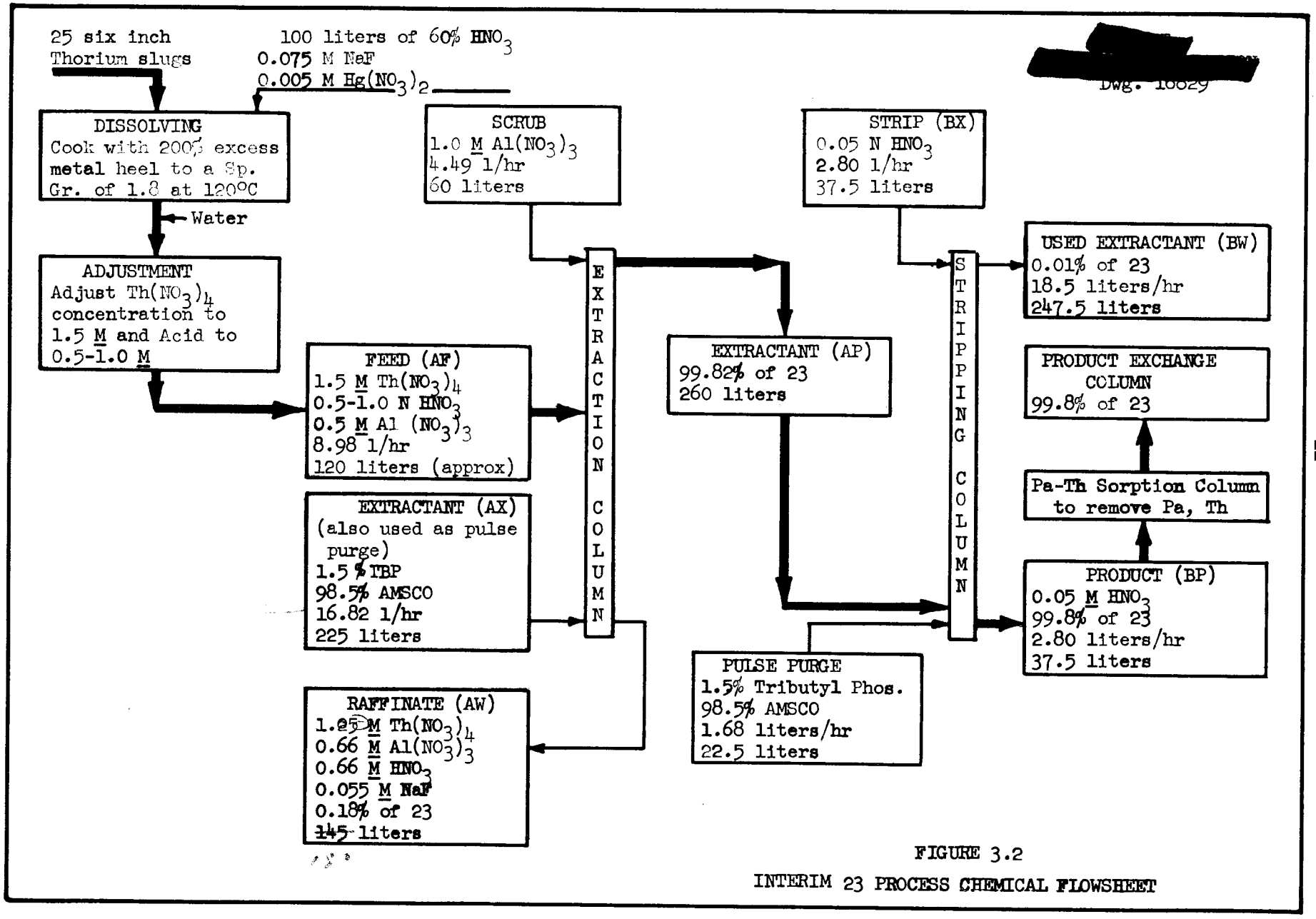

FIGURE 3.2

INTERIM 23 PROCESS CHEMICAL FLOWSHEET

(d) Additional protactinium and fission product decontamination by silica gel adsorption.

(e) Additional thorium decontamination and product isolation by ion exchange.

(f) Preconditioning of the Amsco diluent with nitric acid.

(g) Solvent recovery and decontamination by treatment with sodium hydroxide and silica gel.

3.3 Process Requirements

The specification for the product was that it should contain 95 per cent U-233.

The beta-gamma decontamination factor required over the solvent extraction, silica gel and product column is $10^{7.4}$ to reduce the activity 100 mr/hr at 1 cm from the resin column.

An overall U-233 loss of less than 1 per cent was desired.

3.4 Feed Preparation

3.4.1 Slug History

In the Hanford reactor the thorium metal was irradiated between 100 and 102 days in an average neutron flux of 10^{13} neutrons/cm^2/sec. Initial absorption measurements of gamma-ray activity of a typical 100-day-irradiated and 60-day-cooled slugs were, at a distance of 1 ft in air, 260 mr/hr for 0.5-Mev-energy and 10 mr/hr for 2.5-Mev-energy gamma rays.

The Hanford thorium slugs are 6 in. long by 1.36 in. in diameter and contain 3.63 lb of thorium. The overall dimensions, including the aluminum jackets, are 6.5 in. length and 1.44 in. diameter. The slugs are not bonded.

A special baggage car which carrier three "Scrup carriers" was used to transport the slugs. Each carrier holds about 200 slugs. The heat generated by 200 slugs cooled eight days (about 3 watts per slug) raised the surface temperature to 92°C.

3.4.2 Slug Charging

In each dissolving 25 slugs were consumed and about one dissolving per shift was made. A slug charger with a 25-slug capacity was designed and fabricated; ORNL Drawings D-10376 and D-10377 show the details of construction.

The slug charger, loaded in the storage canal, was transported to the U-233 plant by truck and then hoisted to the top of Cell A. The slug chute cover was removed, and the slug charger was lowered over the chute opening in the top of the cell.

The slugs were dropped one at a time.

3.4.3 Jacket Removal

The Interim-23 flowsheet does not require aluminum jacket removal prior to uranium dissolution. However, the initial charging of 200 per cent metal heel (50 slugs) required a jacket removal step to reduce the aluminum in the first batch to the amount in subsequent dissolvings. The standard procedure using 10 per cent NaOH-20 per cent $NaNO_3$ was used for jacket removal.

3.4.4 Dissolving

The slugs used were 60- to 90-day-cooled neutron-irradiated unbonded aluminum-jacketed thorium slugs containing about 3 moles of thorium per mole of aluminum. Twenty-five slugs were charged in the dissolver with 200 per cent metal heel and were dissolved at 115 to 125°C in 13 N (60 per cent) HNO_3 (5 moles of HNO_3 per mole of thorium, 3.5 moles of HNO_3 per mole of aluminum) containing 0.075 M F^- and 0.005 M Hg^{++}. The fluoride and mercuric ions are catalysts for dissolving the thorium and aluminum, respectively. The average dissolution time was 7 hr, and the final solution contained thorium nitrate, aluminum nitrate, and nitric acid at a specific gravity of about 1.8. The solution was cooled below 100°C, diluted with about 20 liters of H_2O, and then cooled to 50°C before being jetted to the feed adjustment tank. No sample of the dissolver solution was taken.

The off-gases produced in the reaction were scrubbed with 20 per cent NaOH and filtered.

3.4.5 Feed Adjustment

The dissolver solution required only water addition to achieve proper thorium concentration and acidity. Water was added to the feed until a specific gravity of about 1.667 at 30°C was reached. After agitation, the feed was sampled. In few cases was an additional adjustment required.

The final feed conditions were of the order of 1.5 M thorium, 0.5 M aluminum, 0.5 to 1.0 M HNO_3, about 2×10^{10} beta c/m/ml (11 per cent geometry), and about 2×10^6 U-233 alpha c/m/ml (52 per cent geometry). Contact readings showed 5 ml of feed to have an activity of about 25 r/hr.

3.5 Solvent Extraction

The extraction column feed was pumped by the displacement method. The feed is displaced from the feed tank by an inert organic solvent (Amsco), which was pumped from a cold area. This necessitated periodic refilling of the feed tank, at which time the feed flow to the column was stopped. No adverse condition was found when all other streams to the extraction and stripping columns were stopped during this interruption, which usually lasted about 20 to 30 min.

The extraction and stripping columns were pulsed by air-actuated stainless steel bellows through 2- and 1-in. lines, respectively.

The bellows are located outside the cell area. To prevent backflow of radioactive solution from the column to the bellows, extractant for the A column is admitted to the pulse line near the bellows. Since no solution is required in the bottom of the stripping column, extractant is admitted to the pulse line near the bellows at 10 per cent of the A column rate for the sole purpose of purging the pulse line.

Phase separators were placed in each product stream to prevent mixed phases. At no time, however, was a buildup of the undesired phase noted in the catch tank.

Each column has a 3-ft-high enlarged section on the top, made of 6-in. pipe, which permits sufficient settling time for good separation. Interfaces were held automatically in the enlarged section by instrument-controlled air which led to a jackleg pot in the bottom of exit lines.

From experiments with similar glass columns, recommendations were made for column design and operation based on a throughput of 100 kg of thorium per day. The extraction column was divided into a 20-ft extraction and a 20-ft scrubbing section. The strip column has 18 ft of stripping section.

The extraction column was pulsed at 30 cycles/min, and the pulse had an amplitude of 1/8 to 3/4 in. in the column. Changes in column density due to emulsification necessitate the amplitude changes. This condition required hourly checking but did not hamper column operation. The stripping column was pulsed at 50 cycles/min, with a constant pulse amplitude of 3/4 in.

3.6 Product Isolation

3.6.1 Silica Gel Column

The silica gel column is a 1-in. stainless steel pipe 3 ft long filled with 20-mesh silica gel. Placed in the product stream from the strip column, its purpose is to adsorb colloidal activities and permit additional beta and gamma decontamination. No U-233 was permanently adsorbed or lost in this column.

At the end of the processing, this column read approximately 25 r/hr at contact. The protactinium was eluted with oxalic acid for test use in the laboratory.

3.6.2 Protactinium-Thorium Absorption

A column 3 in. in diameter and 2 in. high containing 0.2 liter of Dowex-50 (60 to 90 mesh) was placed ahead of the ion exchange column to preferentially absorb any traces of thorium, protactinium, and aluminum not removed in prior steps. These elements, along with corrosion products such as iron and chromium, were expected to displace temporarily absorbed U-233 from the column as the runs progressed. Considerable decontamination resulted, and the elution of the product column was simplified. The bed was calculated to contain resin in 100 to 200 per cent excess of that required to hold all the thorium expected in the product stream in 1500 g of product.

During the initial runs of the first operating period, the first column used became saturated with corrosion products. After the equipment was passivated, an alternate column was used, but had to be replaced because of leaks. From the three protactinium-thorium absorption columns about 85 g of U-233 was recovered. During the second period, two columns were used and no difficulties were encountered.

3.6.3 Product Exchange Column

For the first phase the product exchange column was a glass pipe 3 in. in i.d. by 24 in. high with specially fabricated stainless steel ends and fitted with a water-tight Lucite jacket to prevent loss in case of fracture of the glass column and to serve as a temperature-control jacket. For the second phase, new columns of the same design but 4 in. in diameter and 12 in. high were used. They were filled with 2.4 liters of Dowex-50 (60 to 90 mesh) resin calculated to be 100 per cent in excess of that required to absorb 320 g of U-233. Absorption was from a downflowing stream with a flow rate of about 1.2 $ml/min/cm^2$, and a light yellow coloration of the resin was produced where the absorption occurred. It was possible to make close estimates of the weight of the absorbed product from measurements of the width of the band. Losses were of the order of 0.01 per cent of the U-233 content. After a column was loaded to capacity, the product flow was diverted by valves to an alternate column in parallel, and the loaded column was removed from the cubicle to the Isolation Laboratory. Here the final product was eluted with 2.0 M ammonium acetate--0.4 M acetic acid solution at 40 to 50°C, and final isolation was made by peroxide precipitation, filtration, and nitric acid digestion.

3.7 Solvent Recovery

The solvent used was 1.5 per cent tributyl phosphate in Amsco 123-15 diluent. This mixture was found to give good U-233 recovery and separation from thorium.

For higher stability to process acidities, the Amsco was preconditioned by initial contact with 8 N nitric acid and silica gel (5 g per liter of wash solution) for 1 hr with agitation. Such treatment also reduced the tendency of beta activity to enter the solvent and made the organic solution more easily stripped of beta activity. Before preconditioning was used, the 1.5 per cent TBP--Amsco extractant became discolored, and, after stripping out the U-233, it retained more beta and gamma activity than was desirable. In one instance in which pure Amsco diluent was used as a displacing medium for the hot feed of high beta and gamma activity, the diluent quickly became contaminated, although very little mixing of the phases had occurred.

The TBP-Amsco solvent was pretreated and recovered by washing with one 0.2 volume of 1.0 M NaOH containing 0.5 g of 8μ silica gel per liter of hydroxide followed by three washes with 0.2 volume of 0.1 M NaOH. The purposes of the constituents of the washes used were as follows:

1.0 M NaOH:	to form sodium salts of the decomposition products mono- and dibutyl phosphate.
8μ silica gel:	to adsorb nitrated organic compounds and colloidal activities.
0.1 M NaOH:	to strip mono- and dibutyl phosphate salts, silica gel, and fission products from the organic phase.

Each wash was contacted with the organic phase by mechanical agitation for 20 min and then withdrawn after settling. The separation of the phases was observed by watching a sight glass at the bottom of the mixing vessel through a periscope.

[redacted]

4.0 PROCESS RESULTS

4.1 Feed Preparation

It was desired that the final feed be approximately 1.5 M in thorium, 0.5 M in aluminum, and 0.5 to 1.0 M in HNO_3, and contain about 2×10^{10} gross beta c/m/ml (11 per cent geometry) and about 2×10^6 U-233 alpha c/m/ml (52 per cent geometry).

The average feed composition realized was:

	Th, M	Al, M	HNO_3, M	β, c/m/ml	U-233 α, c/m/ml
First series of hot runs	1.44	0.73	0.66	2.0×10^{10}	2.0×10^6
Second series of hot runs	1.45	0.75	0.50	4.03×10^{10}	3.21×10^7

4.2 Solvent Extraction and Ion Exchange

4.2.1 Decontamination

The decontamination factors calculated over the extraction and stripping columns and over the extraction, stripping, and silica gel columns together were as follows:

Component	Extraction and Stripping		Extraction, Stripping, and Silica Gel	
	1st Phase	2nd Phase	1st Phase	2nd Phase
Gross β, c/m/ml	3.9×10^5	1.0×10^6	9.0×10^6	5.0×10^6
Gross γ, c/m/ml	4.2×10^5	6.1×10^5	---	3.5×10^6
Thorium	2.3×10^5	2.6×10^5	---	---

The gross beta decontamination factor for the silica gel column alone was 23 for the first phase and 5.0 for the second phase; the gamma decontamination factor was 5.7 for the second phase.

The product was 98 per cent isotopically pure U-233.

[redacted]

4.2.2 Material Balance, Thorium

The amount of thorium in the feed as determined by analysis did not agree with that charged by Hanford; this is explained by the fact that the colorimetric thorium analysis used is accurate only to ±3 per cent. On the basis of analysis, the recovery of the thorium was 99.59 per cent in the first phase and 98.34 per cent in the second phase.

Thorium Balance

	1st Phase	2nd Phase
Thorium charged by Hanford, g	2,342,855.24	1,354,970.97
Thorium in feed (by analysis), g	(2,302,680.00)	(1,279,300.00)
Thorium to storage (by analysis), g	2,293,200.00	1,258,000.00
Difference, g	49,655.24	96,970.97
Thorium loss on basis of amount charged by Hanford, %	2	7.16
Thorium loss on basis of feed analysis, %	0.41	1.66

All the thorium wastes from the extraction column were stored for future recovery in underground tanks south of Building 3503.

4.2.3 Material Balance, U-233

The overall U-233 loss was 0.3 per cent in the first phase and 0.98 per cent in the second phase. The amount of U-233 in the slugs was estimated by Hanford, that in the feed was determined by count analysis, and that in the product was determined by potentiometric analysis. The high-level feed activity impaired the count analysis which is normally accurate to ±3 per cent; the potentiometric titration is accurate to ±1 per cent.

[redacted]

	1st Phase	2nd Phase
U-233 charged by Hanford (calculated value) g	1,728.00	1,233.66
U-233 in feed (by count analysis), g	(1,255.33)	(1,037.60)
U-233 collected on resin (by potentiometric titration), g	1,417.04	1,253.26
Losses, g	4.4	21.40
Total U-233 accounted for (collected plus losses), g	1,421.18	1,274.66
U-233 unaccounted for, g	306.82[a]	41.00[b]

Additional losses other than process in the second phase were:

Estimated loss when the extraction column was partially siphoned, g	5.0
Heel loss from dissolver when jacket removal solution jetted, g	2.2
Drippings from leaks, g	5.5
Total, g	12.7

a loss
b gain

[redacted]

[redacted]

5.0 PROCESS EQUIPMENT

The major items of process equipment and the flow of the process streams for the Interim-23 process are shown schematically in Fig. 5.0. The cell tanks have volumes ranging from 20 to 100 gal and are fabricated of stainless steel to conform to the ASME code for unfired pressure vessels. They are equipped with accessories for mixing, heating and cooling, liquid level and specific gravity determination, temperature measurement, and overflow alarms. Solutions are transferred by pumps, steam jets, pressure-vacuum, and gravity, and are sampled by recirculating air jet samplers. Makeup tanks outside the cells have volumes of approximately 50 gal, are fabricated of stainless steel, mounted on scales, and are equipped with mixers and hinged flap lids for addition of chemicals.

The extraction and stripping columns are 2-in. stainless steel pipe with the contact sections containing plates (with 1/8-in. holes, giving 23 per cent free area) mounted on a center guide rod and spaced at 2-in. intervals. Each column has an enlarged top section of 6-in. pipe for better interface control and settling of the phases. Pulsing is accomplished with stainless steel bellows mounted in a shell fitted with one fixed and one movable stop to control the travel of the bellows. The bellows are flexed by air pressure controlled by a rotating cam which alternately permits and arrests the air flow through a slotted venturi.

5.1 Building and Area Layout

The Interim-23 process was conducted in the former 23 Recovery Pilot Plant, in Building 3503 (formerly 706-HB). A plan of the building and cell block (Fig. 5.1) shows the area occupied by the Interim-23 process equipment. Shielded equipment is located in the east cell block, which is 18 by 18 by 30 ft high and contains one 6- by 14-ft cell and two 6- by 6-ft cells. Cell A, the 6- by 14-ft cell, has lead bricks for additional shielding around tanks containing feed and hot waste solution. Cell B, a 6- by 6-ft cell, has a pit 3 by 6 by 18 ft deep to accommodate the columns, and all cells have 2-ft-thick concrete walls. The operating and sampling areas are located on platforms which surround three faces of the cell block at 10-, 20-, and 30-ft elevations.

The reagent makeup area is at ground level along the south wall of the building. Electrical equipment conforms to NEMA Class VII specifications in the cell and the NEMA Class IV or better specifications elsewhere.

5.2 Materials of Construction

5.2.1 Tanks and Tank Supports

Most major tanks are constructed of AISI type 347 stainless steel. The dissolver, A-2, and feed adjustment tank, A-7, are constructed of heat-treated AISI Type 309SCb stainless steel. Mild steel is used for tank supports.

[redacted]

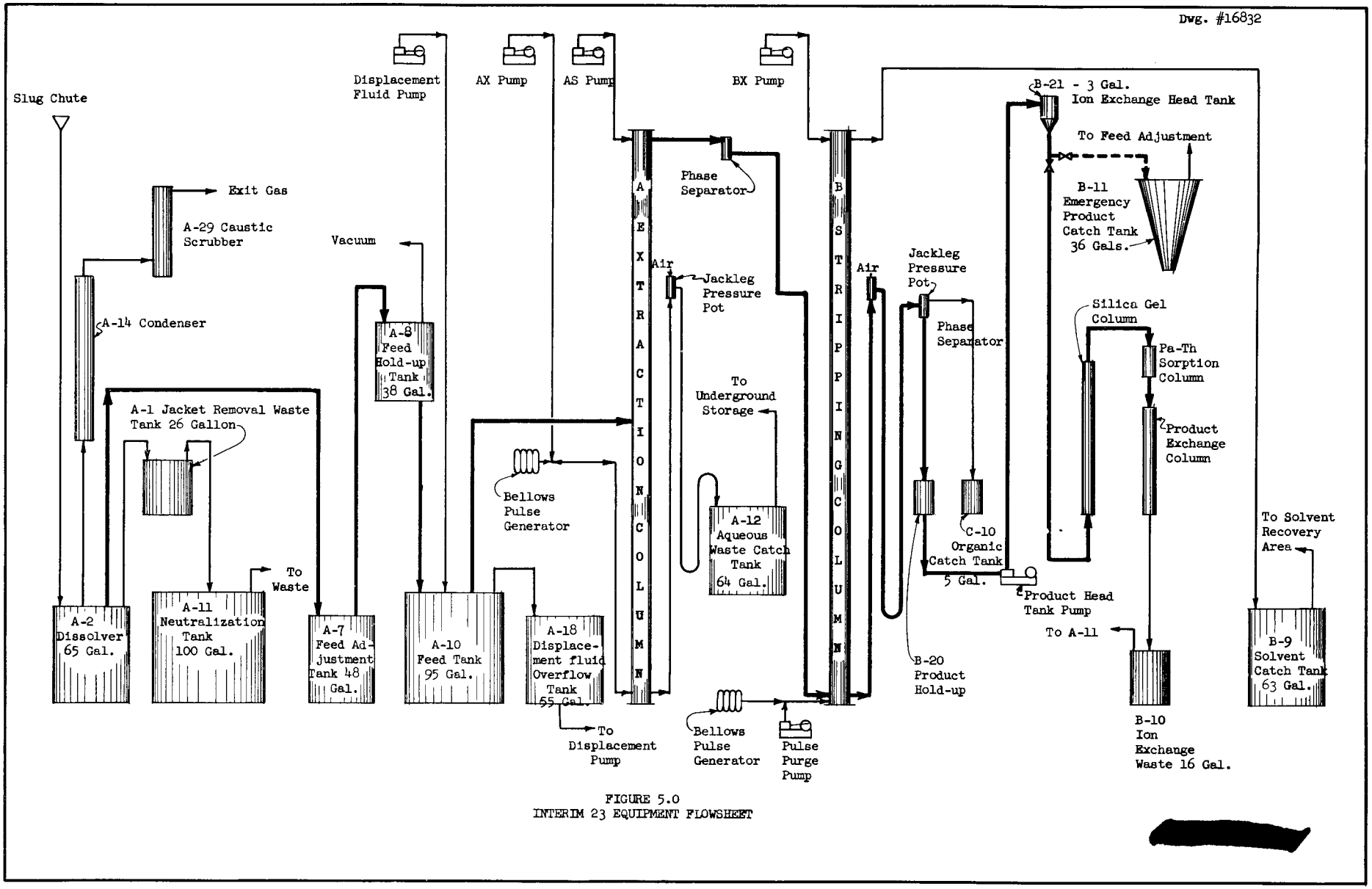

FIGURE 5.0
INTERIM 23 EQUIPMENT FLOWSHEET

[redacted]

[redacted]

Dwg. 16830

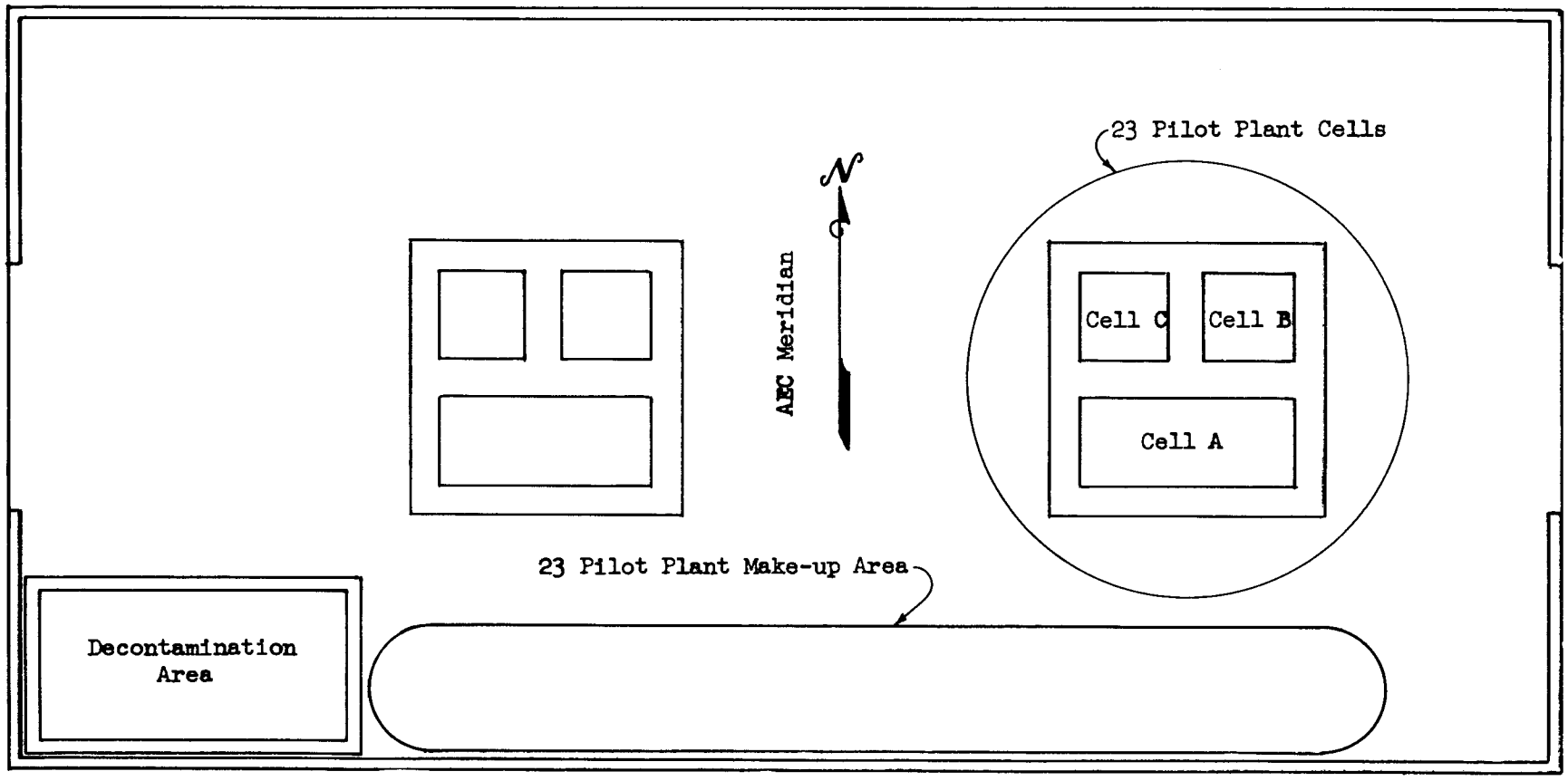

FIGURE 5.1
SCHEMATIC PLAN OF BLDG. 3503

[redacted]

5.2.2 Tubing and Pipe

Process piping is Schedule 40, AISI Type 347 stainless steel. Some piping is welded whereas threaded connections in some instances are tinned. Most service piping to equipment jackets, condenser coils, and jet steam lines outside the cell is galvanized steel pipe.

Most of the process lines in the cell are constructed of seamless, AISI Type 304 stainless steel tubing with 20-22 Band W gage thickness. Tube connectors are mainly Parker Triple flared type fittings, but in some instances Swagelok fittings are used.

5.2.3 Columns and Accessories

The columns are constructed of 2-in. Schedule 40, AISI Type 347 stainless steel pipe. Sections are joined together with flanges. The pulse plates, guide rod, and spacers in the columns, and the pressure and sampling pots are AISI Type 347 stainless steel.

5.2.4 Miscellaneous

Outside the cell, materials used are consistent with the substance handled, e.g., copper tubing for instrument air, mild steel for caustic, and stainless steels for acids and process solutions.

5.3 Reagent Makeup

5.3.1 Nitric Acid

Handling of nitric acid in preparation for slug dissolving is a routine once-a-shift-matter. Acid is received in 140-lb carboys and stored on a concrete pad outside the southeast corner of the building. The acid is drawn from the carboys into a 55-gal stainless steel tank on the ground level by vacuum. From this tank the acid is pumped to a tank on the third level, where it is weighed and the catalysts are added. After being agitated for about 30 min, the entire batch is dropped by gravity to the dissolver (A-2) (see Fig. 5.0).

The reagent makeup area is located on the ground floor of the building. All reagents pumped to the extraction and stripping column are pumped by positive displacement Milton Roy pumps, and the flow is metered by checking the depletion of a calibrated standpipe.

5.3.2 Caustic

Caustic is used to scrub the dissolver gases and in solvent treatment.

For scrubbing the dissolver gases, 20 per cent caustic solution is used. The caustic is received as a 50 per cent solution in 50-gal drums. From the drums, it is pumped to a 55-gal tank in the makeup area on the ground floor, diluted with water, and agitated. The solution is then pumped by a Viking Co., Model 2620, iron pump to a head tank on the fourth level. From this tank the solution is fed by gravity through a rotameter to the caustic scrubber and then to waste.

The 1 M caustic for solvent treatment is made by dissolving flake caustic in water. This is done in a 55-gal stainless steel tank on the fourth level. The solution is dropped by gravity to the solvent treatment tank (C-1) in C cell.

5.3.3 Scrub Solution

Scrub solution, 1.0 M aluminum nitrate, is made in a 55-gal stainless steel tank by dissolving aluminum nitrate in water. The tank is equipped for water addition and for agitation, and has a hinged lid for solids addition. The solution is transferred to the scrub feed tank through an Alsop Filter by a Centripoise pump. From the scrub feed tank the scrub solution is pumped to the extraction column (A).

5.3.4 Solvent

The treatment of solvent is described in Secs. 3.7 and 5.7. After treatment, solvent is dropped by gravity to the feed tank, a 55-gal stainless steel tank. The solvent is pumped to the extraction column (A) by way of the column pulse line to prevent backup of activity in the pulse line.

5.3.5 Strip

The strip feed tank is equipped for agitation, and, since the strip makeup entails only the addition of a small quantity of acid to water, no additional makeup tank is needed. The strip solution is pumped to the stripping column (B).

5.3.6 B Column Pulse Purge

Since there is no process stream to purge the B column pulse line, fresh solvent is pumped at 10 per cent of the A column product rate to purge this line. The head tank is located in C cell and the pump is mounted just outside and north of C cell. The head tank is filled from treated solvent storage tanks by gravity flow.

5.4 Feed Preparation Equipment

5.4.1 Slug Dissolving Equipment

a. Slug Charger and Chute. In each dissolving 25 slugs are consumed, and about one dissolving per shift is made. A slug charger with a 25-slug capacity was designed and fabricated; ORNL Drawings D-10376 and D-10377 show the details of construction.

The slug chute is a 3-in. stainless steel pipe which opens into a funnel on the top level and goes into the dissolver. It is sealed on the open end by a heavy concrete rubber-gasketed cover. To prevent direct radiation from the dissolver, the chute is bent with two smooth turns.

Two slugs dropping at the same time jammed the slug chute on one occasion. This situation can be eliminated by reducing the slug chutes to 2-in. pipe so that two slugs cannot get side-by-side, or by preventing the possibility of two slugs dropping at the same time.

b. Dissolver. The dissolver is a 65-gal tank equipped with a steam and water jacket, temperature indicator, liquid-level and specific gravity probes, and facilities for air sparging. Slugs dropping to the dissolver hit a crash plate and fall to one side into a section which is partitioned away from the dip pipes by a perforated plate.

Operation of the dissolver could be improved with another jacket in the upper portion to act as an emergency condenser.

The dissolver is semiautomatically controlled by an instrument on the dissolver vacuum. During the initial dissolving reaction, the evolution of gases, which tends to pressurize the dissolver by overloading the off-gas system, is manually controlled by water in the dissolver jacket and an air jet in the off-gas line. In the latter stages, however, the control instrument maintains a constant dissolver vacuum by controlling the steam and water to the jacket and air to the off-gas jet. The details of construction of the dissolver are shown on ORNL Drawing E-4118.

c. Condenser A-14. The A-14 condenser consists of coils of stainless steel tubing in which the cooling water flows, with the dissolver off-gas passing on the outside of the coils. The capacity of the condenser is adequate as the off-gas temperatures are maintained at about 35°C during all stages of the dissolving.

The condenser shell is 6 ft by 7 in. in diameter; details are shown in ORNL Drawing 4130.

d. Off-Gas Scrubber. Undesirable amounts of NO_2 escaping from the dissolver reaction are scrubbed out with 20 per cent caustic. The scrubber consists of a 4-in. stainless steel pipe 7 ft in length, with 5 ft of contact section packed with 1/2-in. stainless steel Raschig rings. ORNL Drawing D-6002 gives the details of the scrubber.

e. Off-Gas Filter Equipment. The off-gas system is designed to remove particles of matter in the off-gas which may be radioactive. The system consists of filters to collect the particles and auxiliary equipment to condition the off-gas in order that it will not be harmful to the filters. There is an entrainment separator, two deep-bed filters, a steam heater, pocket filters, a blower, and a stack.

A chamber packed with a York separator and having a 1-ft^2 cross-section serves to collect entrained liquid in the off-gas.

Deep-bed filters packed with glass fiber identical to those designed for the Idaho Chemical Processing Plant are downstream from the separator to collect solid particles.

There is a heating chamber for the off-gas beyond the deep-bed filters to prevent condensate from collecting on the pocket filters.

These pocket filters have layers of FG-25, FG-50, and CWS-6 filter medium in series to remove particles that escape the deep-bed filters.

A blower discharges the off-gas via a stack to the atmosphere.

5.4.2 Makeup Tank, A-7

The makeup tank (A-7) is a 48-gal stainless steel tank with provisions for heating and cooling, agitation, liquid level and specific gravity measurements, temperature indicator, and sampling. Details are given in ORNL Drawing D-4123.

It is possible to cool and dilute the feed to proper specifications with little difficulty.

5.5 Solvent Extraction and Stripping Equipment

5.5.1 Hot Feed System

The hot feed is pumped to the extraction column (A) by displacement from feed tank A-10 in Cell A with an inert solvent; the solvent is pumped to the top of the feed tank from a head tank in the makeup area by a positive-displacement Milton Roy pump. When hot feed is exhausted from A-10, as indicated by a

drop in back pressure of the pump, all streams to the columns are stopped until a new batch of feed is charged to A-10. The adjusted feed is transferred by an air vacuum jet to a holdup tank (A-8) that is about 2 ft higher than A-10. When A-10 is to be charged, valves are opened between A-8 and A-10 and between A-10 and A-18 (displacement fluid overflow tank). As the feed drops into A-10, the displacement fluid is forced into A-18. Since A-18 is equipped with a liquid level and specific gravity recording instrument, a check is obtained on the volume of feed dropped by the volume increase in A-18. Checks are normally as close as 1 to 2 liters. There are four valves between each tank, two in series in a parallel piping system.

5.5.2 Extraction Column, A

The extraction column consists of 40 ft of 2-in. pipe, with 18 in. of 4-in. pipe on the bottom and 4 ft of 6-in. pipe on the top which act as settling chambers. The pulse line is 2-in. pipe and enters the bottom section. In the top section are the control probes and organic sampling probe. The feed enters the 2-in. section at the midpoint, giving 20 ft of extraction and 20 ft of scrubbing. Pulse plates are 16 gage and have 0.125-in. holes in a hexagonal pattern with 23 per cent free area. The plates are spaced 2-in. apart with sections of 0.25-in. pipe, all supported on a 0.25-in. central rod.

Columns are rated at 140 kg of thorium per day on the basis of full-scale studies made in glass equipment. The columns have been run at 100 kg of thorium per day maximum, but most of the production runs were made at a 75-kg-of-thorium-per-day rate to provide adequate time to complete dissolving, adjust feeds, and obtain safe performance.

Some emulsification occurred in the A column which was apparently due to pulse frequency and amplitude and the temperature of the system; when the building cooled because of atmospheric temperature changes, emulsification seemed to develop more readily. Frequency and amplitude were established during cold runs at 30 cycles/min and 0.125 to 0.75 in., respectively.

Emulsification first occurs at the interface and moves down the column. This development can be detected by the following facts:

(a) The pressure decreases as emulsification increases. A pressure gage on the pulse line indicates the column head above the bellows. In normal operation of the A column the head was 17.5 psi; excessive emulsification has developed when the head has dropped to 14 psi.

(b) Less air is required to control the interface as the column density decreases.

(c) The buildup in the organic catch tank decreases as progressive emulsification takes up more solvent into the column. At the same time, the aqueous waste displaced from the column increases the normal buildup in the waste catch tank. The emulsification can be controlled by reducing the pulse amplitude in the column. Hourly checks of this condition were sufficient to maintain good column control. No apparent difficulty in separation was encountered with partial emulsification, and the enlarged section on the top and bottom of the column were adequate to allow good separation of the phases.

a. Column Pulsing. Pulsing of the column is accomplished by air pressure flexing a stainless steel bellows 5 in. in diameter by 5 in. high. The bellows is flanged to the pulse line and housed in a pot such that the air pressure compresses the bellows inward. The pulse timer and air controller is essentially a venturi perpendicularly sliced through at the throat with a rotating cam which interrupts and permits air flow as it rotates through the slot in the venturi. The amplitude is controlled by a fixed stop inside the bellows and an adjustable stop on the air side. The slotted venturi replaced an electrically timed solenoid-operated air valve, and was introduced because of the frequent failure of the timer. No trouble has been encountered with the slotted venturi.

b. Column Interface Control. The position of the interface in the top portion of each column is maintained by air to a pressure pot in the aqueous waste stream. Air pressure to the pot is regulated by a Taylor Fulscope controller receiving pressure changes from probes above and below the interface. Interface control is smooth and positive.

5.5.3 Stripping Column, B

The stripping column, B, is constructed the same as the extraction column, A (see Sec. 5.5.2), except for length. The contact section is 18 ft for stripping.

In stripping, no column difficulties were encountered. The B column was pulsed at 50 cycles/min with a constant pulse amplitude of 0.75 in. during the first phase. During the second phase, the amplitude averaged 0.75 in. but required hourly checks and occasional changes to prevent flooding.

5.6 Product Isolation

At the point at which the product stream comes from the B column there is not sufficient head for flow through the ion exchange columns. The product stream flows by gravity to a 6-in. by 4-ft tank (B-20), from which it is pumped

by a Lapp Pulsafeeder to a 5-gal head tank (B-21) approximately 10 ft above the ion exchange columns, and the effluent is collected in a catch tank (B-10).

5.6.1 Silica Gel Column

The silica gel column is a 1-in. pipe, 3 ft long, filled with 20-mesh silica gel and mounted in Cell B. The product passes upward through the column. Provisions are made for eluting the column from a portable tank outside the cell.

5.6.2 Protactinium-Thorium Absorption Column

There are two protactinium-thorium absorption columns in parallel mounted in a shielded portion of the ion exchange cubicle, a vented stainless steel box 18 by 46 by 59 in. high. They are made of 3-in. pipe with standard flanges, to a length of 3.75 in. from flange face to flange face, and filled with 0.2 liter of Dowex 50 (60 to 90 mesh) resin. The product passes downward through the columns, which are used alternately.

5.6.3 Product Exchange Columns

Two product exchange columns are mounted in the ion exchange cubicle and are valved so that a product-loaded column can be removed while the product flow is diverted to the second column. The product flow coming from the protactinium-thorium absorption column enters the product column at the top; the effluent comes out the bottom and flows to a catch tank (B-10).

For the first phase, the product columns were 3-in.-i.d. Corning pyrex glass pipe, 24 in. long, with specially fabricated stainless steel flanges. For the second phase, 4-in. glass pipe, 12 in. long, was used. The glass pipe column was supported inside a 6-in. Lucite cylinder to prevent U-233 loss by mechanical fracture of the glass column and to form a jacket for temperature control during elution of the column.

When filled with product, the columns are transported in a stainless steel bucket type carrier to the Isolation Laboratory for the final elution and purification step.

ORNL Drawings D-9141 and D-9145 show details of construction of the protactinium-thorium and product exchange columns for the first phase. ORNL Drawing 9164 shows details of the 4-in. column used in the second phase.

5.6.4 Effluent Catch Tank (B-10)

The effluent from the ion-exchange columns is caught in a 16-gal tank, B-10. This tank is equipped with liquid level and specific gravity recording, sampling, and jetting facilities. One complete run can be caught in this tank, which is then sampled and jetted to a waste holdup tank (A-11).

5.7 Solvent Recovery

In solvent recovery, the solvent waste from the B column is caught in a catch tank (B-9), pumped to a hold tank (C-9), recovered in a treatment tank (C-1), and then held in storage tanks (C-6 and C-8) until required for the solvent feed tanks (M-5 and C-7) (see Fig. 5.7).

5.7.1 Holdup Vessels

The solvent waste catch tank (B-9) in cell B acts as a solvent holdup tank. This is a 63-gal tank with facilities for specific gravity and liquid level measurements and sampling. When a run is completed, the contents of B-9 can be pumped to C-9 in cell C, a 79-gal tank, and held for treatment. This tank eliminates the need of delaying operations in case a recovery is in progress in the treatment tank (C-1).

5.7.2 Treatment Vessel

Solvent is treated in a 100-gal tank (C-1) in cell C. It is equipped with an agitator, solution addition funnel, liquid level and specific gravity instruments, sampler, and a sight glass on the bottom drain to observe phase separation. The sight glass can be seen from outside the cell by a periscope, and the tank drain valves are controlled by extension handles near the periscope.

A batch of solvent is dropped from C-9 to C-1, and caustic is added from the 55-gal makeup tank. The contents are then agitated and allowed to settle. The aqueous phase is cut from the bottom and goes to waste; three additional washes are made (see Sec. 3.7). After treatment the solvent is sampled.

5.7.3 Storage Vessels

Treated solvent is dropped by gravity to either of two 85-gal storage tanks (C-6 and C-8). These tanks are equipped with liquid level instruments and have a bottom drain and a side drain which is approximately 4 in. from the bottom. The side drain for solvent to the solvent feed tank prevents draining off the aqueous phase, which normally settles out on standing, with the solvent. Accumulated aqueous phase is removed by the bottom drain.

The two tanks provide ample storage for maintaining a supply of treated solvent.

[redacted]

Dwg. 16831

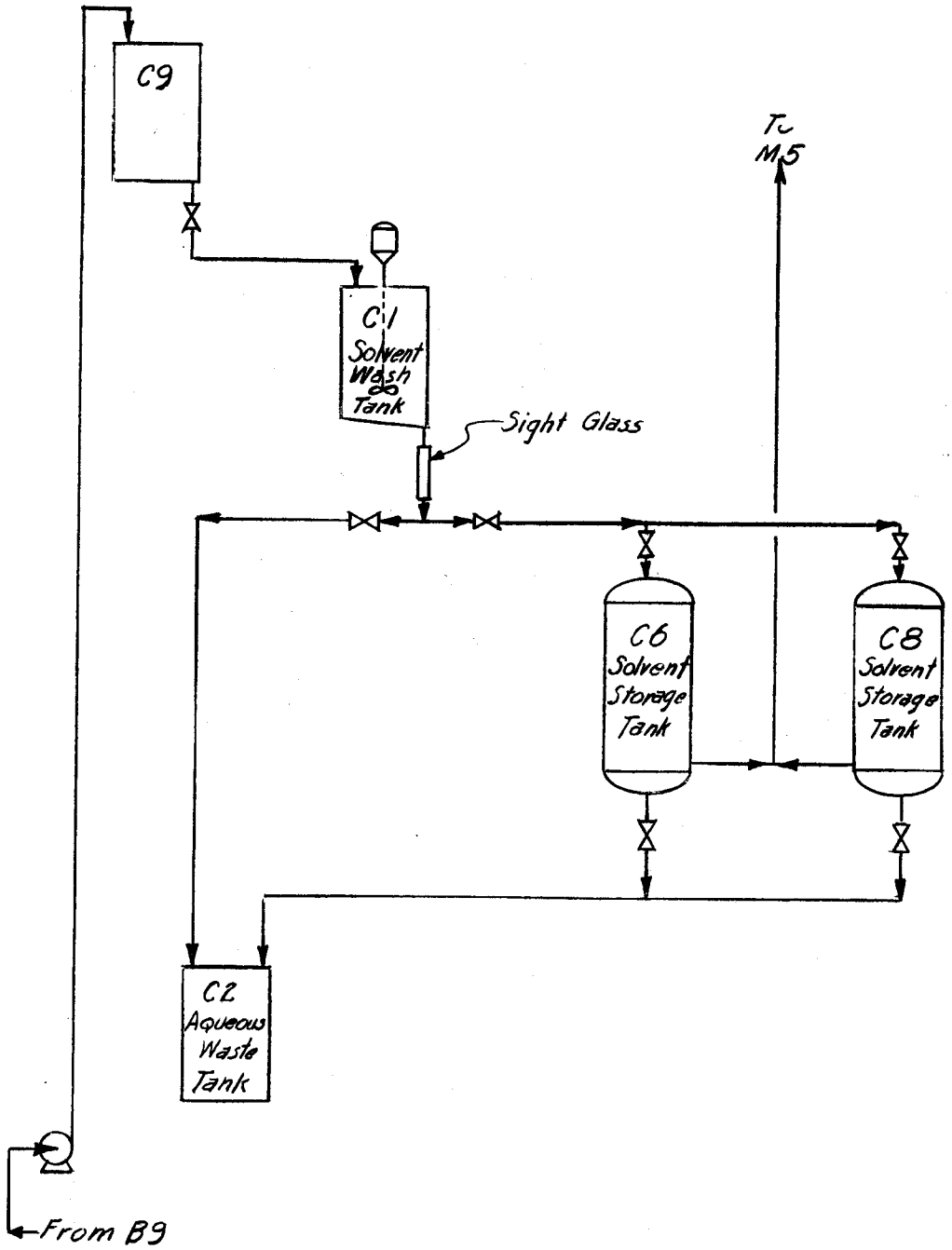

FIG. 5.7
SOLVENT TREATMENT SYSTEM

[redacted]

5.8 Waste Handling

Hot thorium waste is stored in underground tanks south of Building 3503; chemical wastes are retained in an underground tank and periodically pumped to the tank farm, and cold wastes (floor drains) go directly to the settling basin of the tank farm.

5.8.1 Thorium Waste

The A column aqueous waste containing thorium, fission products, small amounts of U-233, and protactinium are stored in underground tanks just south of Building 3503 for future recovery of the thorium and U-233. Waste is jetted from the waste catch tank (A-12) directly to the outside storage tank. Three tanks are presently in use. The first, the original 23 Pilot Plant storage tank, has 2400 gal capacity; the second and third, installed for the present process, have 2500 gal capacity each.

Details of tanks and pump facilities are shown in ORNL Drawing 12051.

5.8.2 Chemical Wastes

Jacket-removal solutions, ion-exchange effluent, and washes from solvent recovery are the chemical wastes. The solutions are temporarily held in a 2500-gal tank south of Building 3503 and are then pumped to the plant tank farm. Solvent washes drain directly, but other streams are jetted to a neutralization tank (A-11) in cell A, from which they are jetted to the chemical waste tank.

5.8.3 Cold Wastes

Caustic from the off-gas scrubber, floor drains, and jacket water drain directly to the tank farm settling basin.

5.9 Sampling

Two types of recirculating air jet samplers were used; the first jet lies in a horizontal position whereas the second jet is vertical. The vertical jets, specially fabricated Schutte-Koerting jets for another project, were used on three hot samplers. Because the jet is positioned higher than the horizontal jets in respect to the up-take and return lines to the sampling point, there is less drainback and drippage of that solution at the sample tips. Each sampler is shielded in a blister having 1 in. of lead shielding.

Hot samples are removed from the blister with tongs and placed immediately into lead pigs for transporting to the Analytical Laboratory.

C D Hylton

C. D. Hylton

CDH/mlc

[redacted]

6.0 BIBLIOGRAPHY

1. D. E. Ferguson and E. L. Nicholson, Summary Report for the 23 Pilot Plant Program, ORNL-715 (July 27, 1950).

2. K. G. Steyer and C. D. Hylton, Int-23 - Quarterly Report for Period 2-10-52 - 5-10-52, ORNL-CF-52-5-223 (May 29, 1952).

3. B. F. Bottenfield, Shielding -706-HB (3503) Int-23, ORNL-CF-52-1-31 (Jan. 4, 1952).

4. D. C. Overholt, An Ion-Exchange Process for U^{233} Isolation and Purification, ORNL-1364 (Sept. 22, 1952).

5. A. T. Gresky, M. R. Bennett, S. S. Brandt, W. T. McDuffee, and J. E. Savolainen, Progress Report Laboratory Development of the Thorex Process, ORNL-1367 (in preparation).

[redacted]

[redacted]

7.0 APPENDIX

[redacted]

TABLE 1

Dwg. #16833

INT. 23 - SEPARATION OF U^{233} at HB PILOT PLANT, Bldg. 3503

Operating Period 4-9-52 to 5-25-52

DATA SUMMARY, Run HT-1 to 55 Incl.

Run Number	Date 1952	Feed Analysis: Volume liters	Th gm/l	Al gm/l	H^+ ion N	U^{233} gm/l	β c/m/ml	γ mr/ml	U^{233} Losses - % By Waste Composites: A. Col.	B. Col.	Resin Col.	Total	By Waste Flowing Stream: A. Col.	B. Col.	Resin Col.	Total	Resin Column Balance: U^{233} in Feed[a] gm.	U^{233} on Resin[b] gm.	B Column Flowing Stream Decontamination Factors: Gross β	Gross γ	Thorium	Al Content gm.	Th Content gm.	Thorium Waste to Storage: U^{233} Mg	Th Kg
Spiked #1	4-9	95.7	353.6	17.6	2.69	0.0094	0.069×10^{10}	0.29×10^{6}	0.66	0.23	0.24	1.13	1.49	0.106	0.532	2.13	0.98	0.37	1.42×10^{5}	1.21×10^{5}	0.708×10^{5}	-	0.18	6.5	3.2
HT - 1	4-12	123.0	352.0	16.4	0.900	0.1073	0.881×10^{10}	3.72×10^{6}	0.41	0.036	0.030	0.48	0.43	0.033	0.013	0.48	13.20	13.13	12.1×10^{5}	8.28×10^{5}	2.03×10^{5}	-	0.33	54.9	34.80
HT - 2	4-15	129.6	342.[illegible]	17.1	0.355	0.1291	0.773×10^{10}	3.75×10^{6}	0.40	0.045	0.007	0.53	0.29	0.041	0.006	0.33	16.73	16.64	1.63×10^{5}	2.61×10^{5}	4.51×10^{5}	-	0.12	79.5	43.40
HT - 3	4-19	129.6	348.0	15.4	0.335	0.1534	0.701×10^{10}	2.75×10^{6}	0.19	0.047	0.031	0.27	0.20	0.047	0.002	0.25	20.27	20.21	0.566×10^{5}	0.730×10^{5}	2.17×10^{5}	-	0.18	38.0	42.20
HT - 4	4-20	131.7	317.0	13.5	0.395	0.1210	0.650×10^{10}	2.73×10^{6}	0.24	0.17	0.025	0.44	0.05	0.160	0.006	0.22	15.94	15.89	0.202×10^{5}	0.283×10^{5}	0.92×10^{5}	0.19	0.50	38.4	41.70
HT - 5	4-21	124.5	337.5	17.4	0.79	0.1530	0.737×10^{10}	2.94×10^{6}	0.19	0.10	0.003	0.29	0.18	0.092	0.014	0.29	19.05	18.99	0.372×10^{5}	0.240×10^{5}	0.207×10^{5}	12.69	2.78	36.4	35.40
HT - 6	4-21	133.8	312.0	22.1	0.99	0.1227	0.646×10^{10}	2.61×10^{6}	0.25	0.13	0.15	0.52	0.12	0.12	0.016	0.25	16.42	16.33	0.189×10^{5}	0.207×10^{5}	0.173×10^{5}	2.01	2.01	40.0	44.00
HT - 7	4-22	121.2	336.0	15.5	1.43	0.1436	0.991×10^{10}	3.93×10^{6}	0.20	0.041	0.067	0.30	0.10	0.037	0.013	0.15	17.40	17.35	1.01×10^{5}	1.02×10^{5}	0.809×10^{5}	0.39	0.64	34.0	37.62
HT - 8	4-23	120.0	352.0	18.3	0.615	0.1755	1.17×10^{10}	6.45×10^{6}	0.36	0.088	0.025	0.47	0.40	0.080	0.026	0.51	21.06	20.96	2.46×10^{5}	2.27×10^{5}	1.10×10^{5}	0.40	0.04	76.5	42.36
HT - 9	4-24	122.0	340.0	28.0	0.380	0.2105	2.15×10^{10}	9.36×10^{6}	0.67	0.066	0.028	0.76	0.11	0.058	0.004	0.17	25.68	25.48	5.16×10^{5}	5.25×10^{5}	1.37×10^{5}	10.26	0.29	171.1	40.00
HT - 10	4-24	121.8	356.0	18.1	0.675	0.2241	1.86×10^{10}	10.0×10^{6}	0.33	0.133	0.009	0.47	0.19	0.112	0.007	0.31	27.30	27.17	7.79×10^{5}	15.9×10^{5}	1.57×10^{5}	10.26	0.27	89.5	37.23
HT - 11	4-25	127.0	338.0	14.7	0.520	0.1936	1.54×10^{10}	9.57×10^{6}	0.25	0.009	0.009	0.26	0.13	0.006	0.008	0.14	24.59	24.53	7.58×10^{5}	7.80×10^{5}	1.77×10^{5}	10.53	0.27	60.1	43.45
HT - 12	4-26	130.0	344.5	16.7	0.55	0.1827	0.876×10^{10}	9.55×10^{6}	0.27	0.021	0.017	0.31	0.14	0.019	0.010	0.17	23.75	23.67	5.01×10^{5}	10.9×10^{5}	2.74×10^{5}	5.92	0.19	64.1	42.27
HT - 13	4-26	128.0	340.0	17.4	0.68	0.1945	2.12×10^{10}	9.32×10^{6}	0.21	0.005	0.013	0.23	0.11	0.004	0.008	0.12	24.90	24.84	9.82×10^{5}	9.33×10^{5}	2.33×10^{5}	9.72	0.22	53.0	44.69
HT - 14	4-27	123.0	347.5	16.5	0.91	0.2086	3.38×10^{10}	18.6×10^{6}	0.08	L.S.[c]	0.009	0.09	0.12	L.S.[c]	0.007	0.12	25.66	25.63	3.25×10^{5}	10.6×10^{5}	1.84×10^{5}	7.02	0.27	21.5	39.92
HT - 15[d]	4-28	129.0	349.5	19.6	0.56	0.2136	2.15×10^{10}	7.00×10^{6}	0.09	0.004	0.008	0.10	0.10	0.004	0.004	0.11	27.55	27.52	2.75×10^{5}	2.82×10^{5}	2.33×10^{5}	2.88	0.20	25.6	40.26
HT - 16	4-28	127.0	342.0	17.8	0.92	0.2391	2.18×10^{10}	7.36×10^{6}	0.15	0.009	0.009	0.17	0.12	0.008	0.003	0.13	30.37	30.32	4.51×10^{5}	3.49×10^{5}	2.47×10^{5}	7.60	0.19	46.7	41.43
HT - 17	4-29	122.0	350.0	18.1	0.59	0.2182	1.80×10^{10}	12.0×10^{6}	0.05	0.003	0.007	0.06	0.03	0.002	0.009	0.04	26.62	26.60	3.51×10^{5}	7.06×10^{5}	2.45×10^{5}	0.33	0.18	14.1	41.36
HT - 18	4-29	127.0	334.0	17.0	0.98	0.1945	1.05×10^{10}	6.25×10^{6}	0.16	0.019	0.012	0.19	0.11	0.018	0.010	0.14	24.70	24.65	2.58×10^{5}	4.30×10^{5}	2.71×10^{5}	0.72	0.18	36.8	47.34
HT - 19	5-2	130.0	347.2	18.9	0.75	0.1936	1.17×10^{10}	5.93×10^{6}	0.29	0.003	0.016	0.31	0.14	0.002	0.012	0.15	25.17	25.09	4.86×10^{5}	3.28×10^{5}	2.62×10^{5}	5.92	0.20	73.7	42.79
HT - 20	5-2	124.0	330.0	19.5	0.57	0.1918	1.07×10^{10}	5.80×10^{6}	0.07	0.010	0.009	0.09	0.26	0.010	0.018	0.29	23.79	23.76	2.96×10^{5}	2.63×10^{5}	2.34×10^{5}	5.92	0.19	16.2	41.04
HT - 21	5-3	122.0	352.0	15.5	0.80	0.2227	1.40×10^{10}	6.64×10^{6}	0.17	0.003	0.007	0.18	0.09	0.005	0.010	0.11	27.17	27.12	2.95×10^{5}	3.61×10^{5}	2.65×10^{5}	7.77	0.16	47.0	40.89
HT - 22	5-3	126.0	348.0	22.0	0.31	0.2164	2.17×10^{10}	8.52×10^{6}	0.07	0.471	0.005	0.55	0.07	0.420	0.020	0.51	27.27	27.12	5.07×10^{5}	4.38×10^{5}	2.27×10^{5}	3.50	0.17	20.4	41.81
HT - 23	5-4	120.0	344.0	20.0	0.63	0.1923	2.16×10^{10}	9.77×10^{6}	0.12	0.011	0.006	0.14	0.41	0.010	0.008	0.43	23.08	23.05	6.33×10^{5}	6.73×10^{5}	3.0×10^{5}	1.54	0.15	28.5	40.05
HT - 24	5-4	121.0	336.5	17.0	0.94	0.1864	2.07×10^{10}	10.1×10^{6}	0.07	0.005	0.006	0.08	0.12	0.004	0.010	0.13	22.55	22.53	7.70×10^{5}	6.48×10^{5}	3.78×10^{5}	0.29	0.12	16.0	40.94
HT - 25	5-5	121.0	342.0	17.0	0.99	0.1909	2.36×10^{10}	10.5×10^{6}	0.07	0.020	0.008	0.10	0.09	0.018	0.012	0.12	23.10	23.08	4.50×10^{5}	4.40×10^{5}	2.87×10^{5}	0.04	0.14	16.8	41.38
HT - 26	5-6	122.0	350.5	16.5	0.76	0.1991	2.39×10^{10}	10.7×10^{6}	0.12	0.003	0.007	0.13	0.06	0.002	0.017	0.08	24.29	24.26	7.56×10^{5}	4.85×10^{5}	3.75×10^{5}	9.18	0.12	29.3	42.27
HT - 27	5-6	122.0	356.0	19.4	0.53	0.1973	2.20×10^{10}	8.00×10^{6}	0.07	0.005	0.009	0.09	0.04	0.004	0.017	0.06	24.07	24.05	6.06×10^{5}	4.34×10^{5}	3.57×10^{5}	0.53	0.14	17.8	44.32
HT - 28[e]	5-7	121.0	347.0	16.8	0.87	0.2232	2.31×10^{10}	10.9×10^{6}	0.09	-	0.008	0.10	0.01	-	0.012	0.03	27.01	26.98	2.91×10^{5}	5.36×10^{5}	3.26×10^{5}	0.35	0.12	24.6	42.42
HT - 29	5-8	124.0	346.0	21.5	0.56	0.1873	1.76×10^{10}	9.82×10^{6}	0.20	0.005	0.003	0.21	0.20	0.004	0.008	0.21	23.23	23.18	1.61×10^{5}	4.83×10^{5}	2.74×10^{5}	7.88	0.18	46.5	41.66
HT - 30	5-8	142.0	314.0	28.0	0.67	0.1473	0.983×10^{10}	6.32×10^{6}	0.15	0.080	0.032	0.26	0.27	0.080	0.070	0.42	20.92	20.86	1.83×10^{5}	3.62×10^{5}	1.72×10^{5}	1.80	0.40	32.3	46.86
HT - 31	5-9	122.0	338.0	22.9	0.49	0.1827	1.58×10^{10}	7.66×10^{6}	0.07	0.024	0.005	0.10	0.02	0.021	0.017	0.06	22.29	22.27	8.94×10^{5}	4.29×10^{5}	2.38×10^{5}	1.58	0.19	16.0	38.63
HT - 32	5-10	122.0	353.0	15.0	0.94	0.2055	2.32×10^{10}	4.0×10^{6}	0.23	0.020	0.049	0.30	0.19	0.019	0.002	0.21	25.07	24.99	3.47×10^{5}	2.88×10^{5}	1.95×10^{5}	2.82	0.21	57.0	40.73
HT - 33	5-10	124.0	348.0	17.1	0.51	0.1841	2.67×10^{10}	7.55×10^{6}	0.15	0.093	0.057	0.31	0.02	0.087	0.004	0.11	22.90	22.83	5.76×10^{5}	3.46×10^{5}	2.74×10^{5}	1.58	0.19	33.3	52.73
HT - 34	5-11	122.0	341.5	17.8	0.75	0.1936	1.37×10^{10}	7.30×10^{6}	0.06	0.043	0.004	0.11	0.05	0.039	0.006	0.10	23.62	23.59	2.38×10^{5}	3.31×10^{5}	2.48×10^{5}	0.23	0.20	14.6	44.23
HT - 35	5-11	121.0	340.0	24.0	0.59	0.1891	2.64×10^{10}	6.82×10^{6}	0.12	0.012	0.005	0.20	0.04	0.010	0.002	0.05	22.68	22.83	2.99×10^{5}	3.12×10^{5}	2.71×10^{5}	2.80	0.18	41.4	39.60
HT - 36	5-12	124.0	345.4	17.9	1.11	0.1705	1.77×10^{10}	8.18×10^{6}	0.06	0.022	0.002	0.09	0.32	0.021	0.002	0.34	22.94	22.73	2.49×10^{5}	4.03×10^{5}	2.54×10^{5}	0.34	0.19	14.9	42.04
HT - 37	5-14	124.0	350.0	19.0	0.55	0.1955	2.15×10^{10}	10.0×10^{6}	0.07	0.010	0.005	0.09	0.51	0.010	0.014	0.53	24.24	24.22	4.25×10^{5}	5.97×10^{5}	2.87×10^{5}	3.33	0.13	17.7	37.88
HT - 38	5-15	120.0	352.0	14.0	0.60	0.1709	2.50×10^{10}	10.9×10^{6}	0.14	0.012	0.005	0.16	0.09	0.011	0.008	0.11	20.51	20.48	5.71×10^{5}	5.17×10^{5}	2.09×10^{5}	8.91	0.23	28.5	39.61
HT - 39[f]	5-16	118.0	330.0	32.0	0.53	0.1682	1.67×10^{10}	10.0×10^{6}	0.08	0.012	0.006	0.10	0.21	0.012	0.037	0.26	19.95	19.83	3.77×10^{5}	7.54×10^{5}	1.88×10^{5}	11.02	0.27	16.1	41.15
HT - 40	5-16	135.0	343.0	8.5	1.41	0.1909	1.98×10^{10}	10.0×10^{6}	0.18	0.011	0.099	0.29	0.11	0.010	0.141	0.26	25.77	25.70	2.84×10^{5}	4.50×10^{5}	1.66×10^{5}	11.60	0.28	45.5	40.39
HT - 41	5-17	120.0	290.0	31.3	0.31	0.1964	1.08×10^{10}	7.43×10^{6}	0.18	0.010	0.002	0.20	0.19	0.010	0.087	0.29	23.57	23.50	1.08×10^{5}	3.05×10^{5}	1.03×10^{5}	2.55	0.29	42.7	37.74
HT - 42	5-18	124.0	342.0	19.2	0.73	0.1300	1.83×10^{10}	9.43×10^{6}	0.17	0.015	0.102	0.29	0.22	0.015	0.088	0.32	16.12	16.07	4.4×10^{5}	2.83×10^{5}	1.90×10^{5}	7.70	0.25	28.2	36.78
HT - 43	5-19	124.0	345.5	15.3	0.43	0.1936	2.13×10^{10}	6.93×10^{6}	0.15	0.010	0.026	0.19	0.05	0.010	0.039	0.09	24.01	23.96	4.58×10^{5}	4.02×10^{5}	1.83×10^{5}	14.00	0.23	36.0	38.25
HT - 44	5-19	124.0	358.0	15.5	0.40	0.1455	1.24×10^{10}	5.82×10^{6}	0.08	0.023	0.032	0.14	0.04	0.027	0.029	0.10	16.04	16.01	6.67×10^{5}	4.15×10^{5}	2.97×10^{5}	14.30	0.21	15.3	41.76
HT - 45	5-20	120.0	325.0	21.3	0.72	0.1427	1.56×10^{10}	4.0×10^{6}	0.10	0.015	0.018	0.13	0.04	0.014	0.027	0.08	17.12	17.10	3.01×10^{5}	5.26×10^{5}	2.99×10^{5}	9.18	0.24	17.8	37.29
HT - 46	5-20	121.0	342.0	19.0	0.29	0.2245	1.16×10^{10}	6.91×10^{6}	0.09	0.009	0.009	0.11	0.07	0.003	0.096	0.17	27.16	27.13	5.80×10^{5}	4.05×10^{5}	2.45×10^{5}	9.45	0.14	25.5	45.50
HT - 47	5-21	124.0	343.0	17.1	0.58	0.1645	1.20×10^{10}	10.7×10^{6}	0.18	0.013	0.013	0.21	0.12	0.012	0.012	0.24	20.40	20.36	2.01×10^{5}	3.37×10^{5}	2.59×10^{5}	-	0.16	36.4	44.23
HT - 48	5-21	118.0	376.0	12.9	0.69	0.1727	1.14×10^{10}	12.5×10^{6}	0.10	0.013	0.015	0.13	0.10	0.011	0.011	0.12	20.38	20.35	2.23×10^{5}	1.51×10^{5}	2.57×10^{5}	-	0.17	21.2	42.07
HT - 49	5-22	119.0	352.0	15.3	0.76	0.2018	1.20×10^{10}	14.5×10^{6}	0.00	0.009	0.011	0.02	0.09	0.010	0.010	0.11	24.01	24.00	1.79×10^{5}	2.23×10^{5}	2.32×10^{5}	-	0.18	02.0	41.47
HT - 50[g]	5-23	120.0	346.0	21.1	0.54	0.2072	1.47×10^{10}	14.7×10^{6}	0.06	0.056	0.014	0.15	0.08	0.064	0.013	0.16	24.86	24.82	3.07×10^{5}	2.79×10^{5}	2.43×10^{5}	-	0.17	20.0	40.04
HT - 51[g]	5-23	119.0	344.0	28.4	0.64	0.2527	1.00×10^{10}	14.9×10^{6}	0.07	0.008	0.010	0.09	0.05	0.008	0.015	0.08	30.07	30.04	2.74×10^{5}	4.32×10^{5}	2.66×10^{5}	-	0.15	21.4	41.47
HT - 52[g]	5-24	121.0	310.0	24.0	0.76	0.2136	1.29×10^{10}	13.0×10^{6}	0.08	0.005	0.010	0.10	0.08	0.005	0.005	0.09	25.85	25.82	4.27×10^{5}	2.10×10^{5}	2.67×10^{5}	-	0.14	21.0	37.28
HT - 53	5-24	122.5	350.0	24.4	0.53	0.2610	1.27×10^{10}	14.7×10^{6}	0.07	0.008	0.008	0.09	0.03	0.009	0.008	0.05	31.97	31.94	2.56×10^{5}	3.87×10^{5}	2.15×10^{5}	-	0.20	23.7	35.40
HT - 54	5-25	111.0	362.0	5.3	1.08	0.2000	1.19×10^{10}	14.1×10^{6}	0.13	0.063	0.011	0.21	0.11	0.065	0.018	0.19	22.20	22.15	4.51×10^{5}	5.99×10^{5}	2.51×10^{5}	-	0.16	3.1	39.53
HT - 55[h]	5-25	50.0	257.0	19.3	5.72	0.1136	1.41×10^{10}	12.0×10^{6}	7.55	0.047	0.030	7.64	-	-	-	-	5.68	5.24	3.37×10^{5}	5.21×10^{5}	5.58×10^{5}	-	0.21	429.3	15.99
TOTALS		6830.4															1255.32	1251.32				227.01	16.18	2386.4	2240.85

(a) By analysis.
(b) Calculated by analysis of waste.
(c) Lost sample.
(d) End of 1st Resin Column.
(e) End of 2nd Resin Column.
(f) End of 3rd Resin Column.
(g) 85 Kg thorium/day charge rate.
(h) Cleanout run.

[redacted]

Dwg. #16834

TABLE 2

INT-23 SEPARATION OF U^{233} AT HB PILOT PLANT, Bldg. 3503

Operating Period August 25 to September 21, 1952

DATA SUMMARY, Run HT-101 to 132 Incl. (and CO-100)

Run Number	Date 1952	Feed Analysis							U-233 Losses - %								Resin Column Balance U-233		B Column Flowing Stream					Thorium Waste to Storage	
									By Waste Composites				By Waste Flowing Stream						Decontamination Factors						
		Volume liters	Th gm/l	Al gm/l	H^+ ion N	U-233 gm/l	β c/π/ml	γ mv/ml	A Col.	B Col.	Resin Col.	Total	A Col.	B Col.	Resin Col.	Total	In Feed Gram	on Resin gm.	Gross β	Gross γ	Thorium	Al Content gm	Th Content gm	U-233 Mg	Th Kg
HT-101[a]	8-25	125	326	18.7	.38	.288	4.4	4.7	1.61	.003	.038	1.65	1.56	.04	.05	1.64	36.0	0.0[a]	1.7×10^5	7.5×10^5	2.8×10^4	289	.13	58	27.7
HT-102[a]	8-26	123.5	312	18.6	1.37	.256	2.5	4.2	2.19	.010	---	2.20	5.67	.01	---	5.68	31.6	00.0[a]	1.5×10^6	1.1×10^6	1.9×10^5	132	.29	69	35.4
HT-103	8-27	124	350	17.2	.67	.288	3.4	4.6	.62	.003	.086	.71	.62	.004	.32	.94	35.8	35.5	1.3×10^6	1.5×10^6	3.1×10^6	19	.19	22	39.2
HT-104	8-28	109	340	16.7	.56	.269	4.4	4.4	.42	.005	.034	.46	.53	.006	.069	.61	29.3	29.1	1.5×10^6	1.1×10^6	1.8×10^5	11	.24	12	37.6
HT-105	8-29	119	342	17.3	.14	.272	4.5	4.2	.36	.004	.060	.43	.52	.004	.046	.57	32.4	32.3	1.2×10^6	1.1×10^6	2.8×10^5	11	.16	12	38.2
HT-106	8-29	119	346	18.0	.60	.318	4.6	4.5	.38	.008	.023	.41	.28	.009	.006	.30	37.9	37.7	2.0×10^6	6.0×10^5	2.0×10^5	7	.23	15	40.0
HT-107	8-30	123	310	24.7	.07	.240	4.0	4.2	.83	.008	.016	.85	.28	.009	.016	.30	29.5	29.3	8.3×10^5	3.2×10^5	2.2×10^5	11	.23	25	40.5
HT-108	8-31	128	325	22.4	.06	.261	4.3	4.4	.56	.004	.015	.58	.17	.004	.007	.18	33.4	33.2	2.0×10^5	3.8×10^5	2.0×10^5	14	.22	19	41.1
HT-109	8-31	118	346	17.8	.40	.266	3.7	4.2	.74	.004	.037	.78	.26	.005	.030	.29	31.3	31.1	5.4×10^5	6.7×10^5	1.7×10^5	3	2.44	24	47.5
HT-110	9-2	120	340	19.1	.68	.310	3.7	3.8	.51	.034	.014	.55	.36	.045	.007	.41	37.2	37.0	3.5×10^5	2.3×10^5	2.5×10^5	10	.16	19	42.5
HT-111	9-3	116	342	16.8	.52	.259	3.7	3.3	.28	.075	.008	.37	.32	.076	.008	.41	30.0	29.9	2.5×10^6	2.2×10^5	3.0×10^5	17	.14	9	37.8
HT-112	9-3	125	345	17.2	.19	.251	3.3	3.1	.35	.010	.010	.55	1.33	.009	.001	1.43	31.4	31.3[b]	4.5×10^6	3.4×10^5	2.0×10^5	11	.26	11	44.2
HT-113	9-4	117	331	21.0	.14	.294	3.6	3.5	.80	.005	.006	.81	.47	.005	.022	.50	34.3	34.0	6.4×10^5	7.0×10^5	1.7×10^5	22	.24	24	36.3
HT-114	9-4	115	288	26.8	.32	.253	3.7	3.6	.70	.006	.003	.71	.57	.005	.002	.57	29.0	23.8[c]	9.4×10^5	1.0×10^6	1.7×10^5	14	.24	21	37.2
HT-115	9-9	125	345	16.9	.29	.293	3.7	4.0	.48	.002	.001	.48	1.14	.030	.005	1.17	36.6	36.4	1.5×10^6	7.6×10^5	3.1×10^3	14	17.6	18	30.8
HT-116	9-10	119	338	14.9	.75	.306	3.8	3.6	.54	.007	.007	.55	.56	.006	.007	.57	36.4	36.2	3.0×10^5	7.3×10^5	1.8×10^4	136	3.4	20	42.7
HT-117	9-10	120	328	33.0	.36	.262	3.1	3.0	1.31	.068	.010	1.39	.50	.068	.011	.58	31.4	31.0	6.6×10^5	4.2×10^5	1.4×10^5	9	.31	43	40.7
HT-118	9-11	119	328	26.2	.29	.340	3.2	3.0	.34	.002	.004	.35	.30	.002	.003	.31	40.5	40.4	5.8×10^5	2.9×10^5	1.2×10^5	7	.31	12	38.2
HT-119	9-11	112	348	16.3	1.22	.264	2.9	2.8	.49	.006	.004	.50	1.11	.076	.014	1.20	29.6	29.5	9.5×10^5	4.8×10^5	2.3×10^5	9	.20	15	38.1
HT-120	9-12	119	276	33.8	.50	.247	1.9	2.3	.49	.005	.002	.50	.77	.006	.002	.78	29.4	29.3	6.9×10^5	3.0×10^5	2.3×10^4	15	1.52	14	31.2
HT-121	9-13	125	346	24.2	.21	.246	2.8	3.0	.80	.007	.009	.81	1.01	.007	.010	1.02	30.7	30.5[d]	1.2×10^6	4.8×10^5	2.3×10^5	12	.26	24	42.6
HT-122	9-13	118	338	20.6	.55	.291	3.2	2.8	.60	.025	.021	.65	.52	.025	.025	.57	34.4	34.2	1.8×10^6	4.2×10^5	1.5×10^5	16	.34	21	41.4
HT-123	9-14	120	341	17.8	.48	.286	2.8	2.5	.53	.018	.003	.55	.40	.018	.007	.42	34.2	34.0	2.4×10^5	2.2×10^5	2.1×10^5	10	.19	18	37.8
HT-124	9-15	119	342	22.6	.12	.240	3.2	2.4	.51	.004	.004	.51	.52	.005	.001	.53	28.5	28.4	7.0×10^5	2.8×10^5	2.1×10^5	3	.20	14	39.6
HT-125	9-16	117	342	16.6	.67	.233	2.9	1.8	.72	.004	.002	.72	.87	.005	.016	.59	27.2	27.0	6.3×10^5	3.7×10^5	2.5×10^5	14	.20	20	38.6
HT-126	9-17	114	359	18.5	.46	.310	2.3	3.1	.22	.48	.002	.69	.41	.50	.002	.91	35.3	35.1	2.5×10^5	3.2×10^5	1.6×10^5	13	.24	8	40.0
HT-127	9-17	113	334	19.7	.84	.315	4.7	5.1	.70	.017	.002	.72	.61	.018	.004	.63	35.4	32.9[e]	7.3×10^5	5.5×10^5	1.5×10^5	14	.30	25	42.5
HT-128	9-18	105	341	17.8	.93	.352	6.3	6.2	.49	.003	.003	.50	.32	.005	.001	.33	37.0	36.8	1.6×10^6	1.2×10^6	1.4×10^5	13	.30	18	35.5
HT-129	9-18	112	343	18.5	.61	.347	7.2	7.5	.39	.003	.004	.40	.54	.003	.001	.71	38.8	38.6	1.3×10^6	1.0×10^6	1.4×10^5	16	.32	15	37.5
HT-130	9-19	114	354	17.6	.66	.360	6.8	6.7	.57	.003	.002	.58	.58	.005	.001	.58	41.0	40.8	6.9×10^5	4.2×10^5	1.8×10^5	20	.28	24	38.0
HT-131	9-19	117	360	16.5	.40	.411	10.2	8.4	.34	.001	.006	.34	.43	.003	.001	.44	48.1	47.9[f]	1.1×10^6	7.8×10^5	1.4×10^5	14	.37	25	40.8
HT-132	9-20	136	346	8.2	1.22	.406	5.7	6.7	1.15	.008	.002	1.16	.57	.007	.002	.58	55.1	54.2	5.3×10^5	5.3×10^5	9.3×10^4	22	.60	64	52.7
CO-100	9-21	0	0	0	0	0	0	0	----	----	----	----	----	----	----	----	0	64.4[g]	----	----	----	0	0	3	4.1
TOTALS/AVG.		3667															1041.1	1037.6	1.05×10^6	6.10×10^5	2.6×10^5	928	32.09	750	1258

(a) The B-column product was recycled for the first two runs as they by-passed the resin column.
(b) End of 1st resin column.
(c) Estimated 5 grams lost due to A-column syphoning to drain prior to run 114.
(d) End of 2nd resin column.
(e) Lost 2.2 grams due to jetting of NaOH solution from dissolver tank prior to run 127 dissolving.
(f) End of 3rd resin column.
(g) Subtracted 5.8 grams estimated loss when catch tank containing drippings from line above ion-exchange columns jetted to waste.